This is a reproduction of a library book that was digitized by Google as part of an ongoing effort to preserve the information in books and make it universally accessible.

Google™ books

https://books.google.com

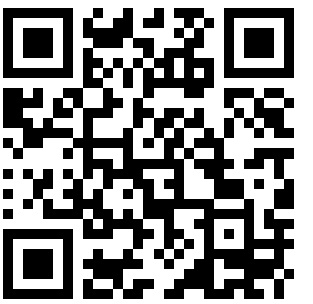

Stanford University Libraries
3 6105 025 732 723

Digitized by Google

Digitized by Google

Digitized by Google

Digitized by Google

Digitized by Google

THE ELECTRICIAN

AND

ELECTRICAL ENGINEER.

A Monthly Review of Theoretical and Applied Science.

VOLUME VI.—1887.

(January to December.)

NEW YORK:
ELECTRICAL PUBLISHING COMPANY,
115 Nassau Street.

Digitized by Google

112699

MICROFILM AVAILABLE

Digitized by Google

INDEX.

Editorials—

PAGE.

American Institute of Electrical Engineers, The 209, 210
American Institute of Electrical Engineers—May Meeting..... 169
Death of Three Prominent Men—Prof. E. L. Youmans, Mr. John Roach, Gen. Wm. B. Hazen.... 42
District Messenger Service, Degeneration in..... 2
Edison Incandescent Lamp Case in England, The..... 82
Electricity for Street Railways...209
Electricity on Street Railways...425
Electric Lighting, The Fire Risk in 41
Electric Lighting, The Progress of 329
Electric Light Figures, Some Prophetic..... 330
Electrical Distribution by Induction..... 290
Electrical Transportation, The Future of..... 289
Electrical Exhibition of the American Institute, The..... 330
Efficiency of the Direct *vs.* The Alternating System of Distribution 426
Farrago—A French Joke. 43
Faure and Brush Patents, The —Storage Batteries..... 1
Fire Risk in Electric Lighting, The 41
Future of Electrical Transportation, The..... 289
Hazen, Gen. William B., Death of 42
Jubilee Days 249
Let This be a Warning..... 210
Long-Distance Telephony..... 3
National Electric Light Association, The..... 81, 330
Notes..... 3, 43, 82, 130, 170, 210, 250, 290, 291, 330, 386, 426, 466
Patent Office Methods..... 129
Patent Office Reform..... 465
Progress of Electric Lighting, The..... 329
Pan-Electric Non-Suited..... 385
Roach, John, Death of..... 42
Street Railways, Electricity for..209
Street Railways, Electricity on...425
Some of the Results of Telegraphic Competition..... 425
Semi-Centennial of Industrial Electricity, The..... 329
Some Prophetic Electric Light Figures..... 330
Subways in New York..... 385
Storage Batteries—The Faure and Brush Patents..... 1
Street Railway Traction in New York..... 466
Telegraphic Competition, Some of the Results of..... 425
Telephone Profits 169
Telephony, Long-Distance..... 3
Youmans, Prof. E. L., Death of.. 42

Articles—

Accumulator, Testing the Julien.469
Alternating Currents, Distribution by 344
Alternating E. M. F., Maximum Work of an (*illustr.*)..... 401
Alternating Currents, Novel Phenomena of (*illustr.*)..... 211
Alternating Systems of Electric Lighting, The Westinghouse (*illustr.*)..... 332
Ammeter, The Waterhouse Standard (*illustr.*)..... 396
Application of the Centi-ampere and the Deci-ampere Balance for the Measurement of the E. M. F. of a Single Cell (*illustr.*).442
C. & C. Electric Motor, The (*illustr.*)..... 62
Cables, Underground and Aerial.442
Clark, the Late Alvan 366
Cheapness or Economy ?..... ...480
Central Station Construction. ...215
Comparative Statistics of Electric Railways, A few..... 227
Conduit for Electric Street Railways, The Reis Combination (*illustr.*)..... 400
Cross-Section of the Iron in Armature and Field of the Gramme Dynamo, The Relation Between the (*illustr.*)..... 221
Coulomb Meter or Instrument for Measuring the Consumption of Electricity, A (*illustr.*)..... 428
Dead Wire of the Armatures of Dynamo Machines, the So-Called (*illustr.*) 61
Design and Construction of Dynamo Electric and Electro-Dynamic Machinery (*illustr.*)..474
Differing Temperature Co-efficients of the Different Coils of a Fine Rheostat, On the..... 220
Distribution by Alternating Currents..... 344
Distribution by Alternating Currents and Transformers, Electrical..... 187
Distribution by Alternating Currents and Transformers, Electrical (*illustr.*) 257
Duplex Telephony (*illustr.*).. ...183

PAGE.

Dynamo-Electric and Electro-Dynamic Machinery, Design and Construction of (*illustr.*)..... 474
Dynamo-Electric Machinery (*illustr.*)..... 19, 51
Dynamos, Note on the Performance of Some..... 148
Dynamic Electricity (*illustr.*) ... 9 63, 85, 144, 185, 218, 251, 304, 354, 387, 431, 487
Economy and Efficiency of Underground Electrical Conductors in Cities, The..... 83
Efficiency of Small Electro-Motors, The..... 226
Efficiency Tests of a Gaulard and Gibbs' Transformer..... 308
Electric Balances, Application of the Centi-Ampere and the Deci-Ampere Balance for the Measurement of the E. M. F. of a Single Cell (*illustr.*) 442
Electric Balances, New..... 441
Electric Current, The..... 431
Electric Lighting of Passenger Trains, The (*illustr.*)..... 266
Electric Lighthouses of Macquarie and Tino, The (*illustr.*).....133
Electric Light for the New Cruisers..... 346
Electric Light Wires, Popular Prejudices Against..... 92
Electric Locomotion, Storage Batteries for..... 349
Electric Motors..... 96, 99
Electric Motor, The C. & C. (*illustr.*) 65
Electric Railways, A Few Comparative Statistics of 227
Electric Railways, Overhead Conductors for (*illustr.*)..... 296
Electric Railway, The Short-Nesmith (*illustr.*)..... 140
Electric Street Cars..... 15
Electric Street Cars, with Special Reference to Methods of Gearing, On..... 395
Electrical Distribution by Alternating Currents and Transformers (*illustr.*) 187, 257, 299
Electrical Engineering in Japan, A Short Sketch of..... ...101
Electrical Exhibition and Pure Research, The 44
Electrical Papers Read Before Section A during the Late Meeting of the British Association at Manchester, 1887, Sketch of the Principal..... 434
Electrical Street Railways, The Reis Combination Conduit for.400
Electrical Transmission of Power by Brown's Dynamos (*illustr.*).178
Electricity in Mills, Uses of.....427
Electricity in Mills, Uses of--An Addendum..... 486
Electricity as a Motive Power....443
Electro-Deposition of Alloys, Experimental Researches on the..390
Electro-Deposition of Iron, The..309
Electro-Deposition of Alloys and the Electro-Motive Forces of Metals in Cyanide Solutions, Note on the..... 311
Electro-Motors, Small, The Efficiency of..... ..226
Equivalents of Units of Measurement..... ...182
Explorations of the Magnetic Fields Surrounding Dynamos (*illustr*)..... 292
Experimental Researches on the Electro-Deposition of Alloys....390
Flad's Overhead Wire System for Cities (*illustr.*)..... 258
Focusing Arc Electric Lamp, Mr. Wallace Goold Levison's (*illustr.*)..... 49
"For High Insulation"..... 93
Gaulard & Gibbs' Transformer, Efficiency Tests of a..... 308
Griswold's Torpedo Boat (*illustr.*) 7
Glow-Lamps: Their Use and Manufacture 65
Hurlbut Flexible Conduit, The (*illustr.*)..... 105
Incandescent Light Leads (*illustr.*) 4
Incandescent Lights on High Tension Circuits..... 90
Induction Between Wires and Wires, On (*illustr.*)..... ...439
Late Alvan Clark, The 360
Lead-Encased Conductors (*illustr.*)..... 224
Lighting Trains by Electricity (*illustr.*) 438
Long-Distance Telephone Work, Notes on 446
Magnetic Fields Surrounding Dynamos, Explorations of the (*illustr.*)..... 292
Maximum Work of an Alternating E. M. F. (*illustr.*)..... 401
Measurement of the Power Absorbed by Alternating Current Apparatus, The (*illustr.*)..... 8
Medical and Testing Battery of Dr. Charles Piper, The.....310
Motive Power, Electricity as a...443

PAGE.

Motors, the Practical Requirements of Small 119
Mr. Wallace Goold Levison's Focusing Arc Electric Lamp (*illustr.*)..... 49
New Electric Balances..... 441
Note on the Electro-Deposition of Alloys and on the Electromotive Forces of Metals in Cyanide Solutions..... 311
Note on the Performance of Some Dynamos..... .....148, 220
Novel Phenomena of Alternating Currents (*illustr.*)..... ...211
Ocean Cabling, Recent Improvement in Apparatus for (*illustr.*)482
Overhead Conductors for Electric Railways (*illustr.*) 296
Overhead Wire System for Cities, Flad's (*illustr.*)..... 253
Patent System, Reform in the... 89
Practical Notes Concerning the Construction, Use and Management of Storage Batteries..... 50, 104, 173, 262, 302, 390
Practical Requirements of Small Motors, the..... 119
Present Status of the Storage Battery, The..... 351
Popular Prejudice Against Electric Light Wires 92
Power Absorbed by Alternating Current Apparatus, The Measurement of (*illustr.*)..... 8
Reckenzaun's Secondary Battery (*illustr.*)..... 393
Recent Improvements in Apparatus for Ocean Cabling (*illustr.*)482
Relation Between the Cross-Section of the Iron in Armature and Field of the Gramme Dynamo, The (*illustr.*) 221
Ries "Combination" Conduit for Electric Street Railways, The (*illustr.*)..... 400
Statistics of United States Patents Issued in 1886..... 64
Secondary Battery, Reckenzaun's (*illustr.*)..... 393
Science and the Labor Question.. 87
Short Sketch of the Progress of Electrical Engineering in Japan, A..... 101
Short-Nesmith Electric Railway, The (*illustr.*). 140
Simplification of the New Weather Signal Code, A (*illustr.*)358
Sketch of the Principal Electrical papers read before Section A during the Late Meeting of the British Association at Manchester, 1887..... 434
So-Called "Dead-Wire" on Gramme Armature (*illustr.*)...171
So-Called "Dead Wire" of the Armatures of Dynamo Machines, The (*illustr.*)..... 61
Storage Batteries in Practice..... 224
Storage Battery, The Present Status of the 351
Storage Batteries, Tests of the Julien Accumulator..... 469
Storage Batteries, Practical Notes Concerning the Construction, Use and Management of..... 50, 104, 173, 262, 302, 390
Storage Batteries for Electric Locomotion 349
Story of the Word Telephone, The (*illustr.*)..... 131
Telephone, Story of the Word....131
Telephony, Duplex (*illustr.*).....183
Telephone Work, Notes on Long-Distance..... 446
Temperature Co efficients of the Different Coils of a Fine Rheostat, On the Differing..... 220
Tests of the Julien Accumulator.469
Transmission of Power by Brown's Dynamos (*illustr.*)... 178
Transmitting Speech by Interrupted Electrical Currents (*illustr.*)467
Torpedo Boat, Griswold's (*illustr.*) 7
Underground and Aerial Cables.442
Underground Electrical Conductors in Cities, The Economy and Efficiency of..... 83
Units of Measurements, Equivalents of..... 182
Unpublished Chapter in the History of the Electric Telegraph, An 342
Uses of Electricity in Mills.....427
What is Electricity ?—A Suggestion 13
Waterhouse Standard Ammeter, The (*illustr.*)..... 395
Westinghouse Alternating System of Electric Lighting, The (*illustr.*)..... 332

Abstracts and Extracts—

Brake Tests, The Burlington.....277
Brake Test, The Park Electric...118
Brake Tests, Westinghouse.....492
British Association Notes.....493
Burlington Brake Tests, The.....277
Cofferdam..... 23
Continuous Current Transformers .....' 69

PAGE.

Copper Production of the United States 192
Curious Thermo-Dynamic Motor, A (*illustr.*)..... 355
Don't Take a Back Seat.....273
Edison's Pyro-Magnetic Generator 355
Efficiency of Electric Motors, The189
Electric Locomotion..... 229
Electric Lighting at the Paris Exhibition of 1889..... 190
Electric Lighting from Primary Batteries..... 277
Electric Lighting, Power Required for..... 315
Electric Lighthouse of Tino, The.405
Electric Light Time Meter, An.. 72
Electric Lighting, The Westinghouse System of..... 491
Electric Measuring Instruments..272
Electric Motors, The Efficiency of 189
Electric Railways in Russia.....178
Electric Traction on the Brighton District Tramway 408
Electric Tramways Coming..... 71
Electrical Transmission of Energy, The..... 23
Electricity from Atmospheric Oxidation 229
Electrolysis, Verification of Faraday's Law of, with Reference to Silver and Copper..... .149
Employment of Spiral Springs for Measuring Instruments, The190
English Salutations to the American Institute of Electrical Engineers 273
Equivalent of Zinc, The..... .316
Fast Speed Telegraphy (*illustr.*).406
Fast Speed Telegraphy, Underground Wires for..... 314
Galvanic Battery, A Powerful....316
Gas and Electricity..... 70
Gas and Electricity—Two Interests or One ?..... 192
German Patent Office, The..... 192
Heat Battery, A..... 277
Horn's Electrical Tachometer.... 24
Induction Coils or Transformers.191
Influence of Electricity on Delicate Weighing..... 192
Lighthouse Illuminants..... 190
Lighthouse of Tino, The Electric.405
Locomotion, Electric..... 229
Long-Distance Telephony. ...72, 164
Magnetic Field, The..... 404
Magnetic Fields..... 24
Magnetization of Iron in Strong Fields, On the (*illustr.*)..... 408
Microphone, A New..... 316
New Method of Determining the Time of Oscillation of a Magnet. 23
"No Patent, No Pay"..... 194
On Reversible Lead Batteries and their Use for Electric Lighting. 195, 269
On a Simple and Convenient Form of Water Battery..... 189
On the Determination of the Co-efficient of Self-Induction..... 188
On the Experiments Communicated by M. Fontaine on the Transmission of Power..... 70
On the Magnetization of Iron in Strong Fields (*illustr.*)..... 408
On the Transmission of Power.—A Reply to M. Deprez..... 70
Oscillation of a Magnet. New Method of Determining the Time of. 23
Park Electric Brake Test, The...118
Patents and Patent Law, Something About..... 194
Power Required for Electric Lighting..... 315
Powerful Galvanic Battery, A...316
Practical Test of Storage Batteries for Tramways, A..... 313
Primary Batteries, Electric Lighting from..... 277
Professor Tyndall and the Scientific Movement 312
Professor Tyndall—Extract from his Address at the London Banquet..... 313
Professor Tyndall on Lightning Conductors 405
Prominent Gaslight Officials on Electricity, A..... 71
Pyro-Magnetic Generator, Edison's..... 355
Static Electricity, Some Interesting Experiments with.....192
Self-Induction, On the Determination of the Co-efficient of....188
Self-Induction in Voltmeter Coils 24
Sermon to Employés, A 24
Steno-Telegraphy..... 191
Some Interesting Experiments with Static Electricity..... 192
Something About Patents and Patent Law..... 194
Storage Batteries for Tramways, A Practical Test of..... ... 313
Storage Batteries, On Reversible Lead Batteries and their Use for Electric Lighting 195, 269
Tachometer, Horn's Electrical.... 24
Traction, Electric, On the Brighton District Tramway..... 408

Digitized by Google

INDEX.

PAGE.

Train Telegraphy 316
Transformers, Continuous Current 69
Transmission of Energy, Electrical 23
Transmission of Power, A Reply to M. Deprez 70
Transmission of Power, On the Experiments Communicated by M. Fontaine on the 70
Telephone Service Cable System at Copenhagen, Denmark 149
Telephony, Long-Distance ... 72, 164
Theory of Voltaic Action, A 68
Thermo-Dynamic Motor, A Curious (*illustr*) 355
Tyndall, Professor, and the Scientific Movement 312
Tyndall, Professor, Extract from his Address at the London Banquet 313
Tyndall, Professor, On Lightning Conductors 405
Underground Telegraphy 274
Underground Telegraph Wires in Germany 191
Underground Wires for Fast Speed Telegraphy 314
Verification of Faraday's Law of Electrolysis with Reference to Silver and Copper, The 149
Voltaic Action, A Theory of 68
Volt-MeterCoils, Self-Induction in 24
Water Battery, On a Simple and Convenient Form of 189
Westinghouse Brake Tests 492
Westinghouse System of Electric Lighting, The 491
Zinc, The Equivalent of 316

Electrical News and Notes—

Alternate Current Distribution, Symptoms of Further Litigation Over 419
American Bell Telephone Co., Annual Report of the 203
American Institute of Electrical Engineers, Special Meeting and Dinner 34
American Institute of Electrical Engineers—Annual Meeting ... 234
General Meeting 235
Contributions to Building Fund. 245
List of Officers and Members ... 246
Published Transactions 247
American Institute of Electrical Engineers—Fourth Special Meeting 157
American Institute of Electrical Engineers, The—First Monthly Meeting, Season '87-88 415
American Institute of Electrical Engineers—Meeting of October 11th, 1887 452
American Institute of Electrical Engineers and the New York Electrical Society, The—Joint Meeting 497
American Street Railway Association, The—Annual Meeting ... 459
Another New Application of Electricity 77
Another Telephone Infringement Suit Decided 326
Annual Report of the American Bell Telephone Co. 203
Annual Report of the Western Union Telegraph Co. 457
Baltimore and Ohio Telegraph Co. in its New Quarters, The ... 206
Baltimore and Ohio Deal Declared Off, The 326
Baltimore and Ohio Telegraph Co., The 165
Brooklyn Bridge Freezing and Cold Storage Co.—Exhibit of the Telemeter System 248
Brooklyn Subway Wires 39
Catalogues and Pamphlets Received 423
Chart Showing Average Tolls and Average Cost per Message of the Western Union Telegraph Co. for Twenty Years 38
Cologne Electric Tramway, The .. 501
Cornell University—Annual Inspection Tour of Engineering Classes 167
Cost Per Message of the Western Union Telegraph Co. for Twenty Years. Chart Showing Average. 38
Davis, Daniel—Obituary 165
Edison Association, Fifth Meeting of the 382
Electric Alarm Signals on the Berlin Metropolitan 326
Electric Club, The 126
Electric Light and Power 39, 78, 126, 165, 207, 286, 327, 462, 502
Electric Light Association, The National, — The Philadelphia Meeting 105
Electric Light Association, A Legal Bureau for the National. 77
Electric Light Association, The National, Sixth Semi-Annual Meeting 362
Electric Lighting Conductors at the Royal Jubilee Exhibition, Manchester 285
Electric Lighting at Cannock Chase Collieries 78
Electric Light Combination, An Important 422

PAGE.

Electric Light Litigation 78
Electric Lighting, German Progress in 206
Electric Light Association, National 38
Electric Railways in America ... 328, 383, 421, 463, 503
Electric Tramway, The Cologne .. 501
Electrical Clam Bake, The 383
Electrical Engineers, American Institute of, Special Meeting and Dinner 34
Electrical Engineers, American Institute of, Fourth Special Meeting 157
Electrical Engineers, American Institute of, Annual Meeting ... 234
General Meeting 235
Contributions to Building Fund. 245
List of Officers and Members ... 246
Published Transactions 247
Electrical Engineers, American Institute of, First Monthly Meeting, Season '87-88 415
Electrical Engineers, American Institute of, Meeting of October 11, 1887 452
Electrical Engineers, American Institute of, and the New York Electrical Society, Joint Meeting 497
Electrical Engineering Department at Cornell University, The 460
Electrical Festivities—Dinner of the Electric Club 205
Electricity "As She is Taught" in the Newspapers 326
Electricity in Mining 166
Elevated Railroad, Mr. S. D. Field's Motor, on the 422
English Electricians Enjoy Themselves 205
Examination in Electrical Measurements, Cornell University ... 76
French Exhibition of 1889, The .. 39
Fifth Meeting of the Edison Association 382
Fuel and Light 39
Field's, Mr. S. D., Motor on the Elevated Railroad 422
Gaulard & Gibbs' Patent, Suit for Infringement of the 167
Gas and Electricity in Europe .. 502
Gas Engines Employed in a Central Station Plant 461
Gas Lighting by Electricity 382
German Progress in Electric Lighting 206
Government Telephone Suit, The. 206
Hering, Mr. Carl—Personal Mention 501
Important Electric Lighting Combination, An 422
Infringement Suit Decided, An ... 423
Insulated Rail-joints for Electric Signals 326
Inventor's Record ... 40, 80, 128, 168, 208, 248, 288, 328, 384, 424, 464
Johns Hopkins' University — Course in Electricity and Magnetism 324
Jubilee Dinner of English Electricians in New York, The 285
Kirchhoff, Gustave R.—Obituary. 460
Legal Bureau for the National Electric Light Association, A .. 77
Legal Notes 167
Light from Coal, The 167
List of Officers and Members ... 246
Long-Distance Telephony Abroad 126
Manufacturing and Trade Notes .. 327
Marvelous Telephone, A 165
Microphone for Detecting Leaks, The 166
Mining, Electricity in 166
National Electric Light Association 38
National Electric Light Association—The Philadelphia Meeting 105
National Electric Light Association, The—Sixth Semi-Annual Meeting 362
National Telephone Exchange Association, The—Annual Meeting 422
New York Electrical Society, The —Celebration of its 100th Meeting 247
New York Electrical Society Electrical Exhibition, Sept. 28th to Dec. 3rd, 1887 324
New York Electric Club, The 382
New York Subways 39
New Subway Management 78
New Underground Conduit, A 78
New Incorporations ... 39, 79, 128, 166, 207, 287, 327, 463, 502
Obituary—Daniel Davis 165
Obituary—Joseph P. Fitch 383
Obituary—George H. Grace 203
Obituary—Gustave R. Kirchhoff —O. E. Woodhouse 460
Obituary—Sidney F. Shelbourne. 501
"Old Timers" Association, The. 382
Patents, Classified List, U. S. Electrical (Inventor's Record) ..
Patent Law, Revision of, Proposed, by the National Electric Light Association 461
Personal Mention 423
Personal Mention—Mr. Carl Hering 501

PAGE.

Permanent Technical Exhibition at St. Petersburg, A 461
Primary Batteries 501
Polarization of Resistance Coils 77
Patent Office Business 1885-1886 .. 38
Quarterly Report of the Western Union Telegraph Co. 167, 421
Railway Telegraph Superintendents' Association, Sixth Annual Meeting 321
Raillery 206
Reception and Ball of Electric Light Employés 166
Red-hot Telephone Transmitter, A 208
Regulating Pole Lines in New York 323
Report on the Experiments of M. Marcel Deprez, relating to the Transmission of Power between Creil and Paris (*illustr*) 29
Revision of the Patent Law Proposed by the National Electric Light Association 461
Rose Polytechnic Institute 286
State Electrical Laboratory for France, A 126
Shelbourne, Sidney F.—Obituary 501
Street Railway Association, The American, Annual Meeting ... 459
Storage Battery Litigation .. 126, 167
Subway Wires, Brooklyn 39
Subway Management, New 78
Subways, New York 39
Submarine Cables 41, 78
Suit for Infringement of the Gaulard and Gibbs Patent 167
Symptoms of further Litigation over Alternate Current Distribution 419
Tramway, The Cologne Electric. 501
Transmission of Power between Creil and Paris, Report on the Experiments of M. Marcel Deprez 29
Telegraphing from a Pole 382
Telegraphing to and from Moving Trains 461
Telegraph Statistics 206
Telephone, A Marvelous 165
Telephone, The 78, 126
Telephony Abroad, Long-Distance 126
Telephone Case in the Supreme Court, The—A Junk Shop Missile 76
Telephone Exchange Statistics .. 461
Telephone Infringement Suit Decided, Another 326
Telephone in Germany, The 420
Telephone between Hamburg and Kiel 286
Telephone Notes 503
Telephone Suit, The Government 206
Telephone Transmitter, A Red Hot 208
Telephone Exchange Association, National, Annual Meeting ... 422
Tolls per Message of the Western Union Telegraph Co. for Twenty Years, Chart showing Average 38
Underground Conduit, A New 78
University of Kansas, The—Course in Electrical Engineering 286
U. S. Illuminating Co. The 285
Western Union Telegraph Co., Annual Report 457
Western Union Telegraph Co., Quarterly Report 155, 421
Westinghouse, Thomson-Houston, Sawyer-Man Combination, The 503
Woodhouse, O. E.—Obituary. ... 460
Zalinski's, Lieut., Pneumatic Dynamite Gun 419

Literature—

Catalogues and Pamphlets Received ... 29, 76, 157, 203, 285, 423
Periodicals 76, 157, 203
Recent Publications 76, 284
Reviews :—
The Electric Motor and its Applications (by *T. C. Martin* and *Jos. Wetzler*) 75
L'Année Electrique 202
Some Recent Instruction Books 202
A Primer Extraordinary 284
Die Wirkungsgesetze der Dynamo-Electrischen Maschinen (by *F. Auerbach*) 361

Letters to the Editor—

Alternate Current Dynamos ... 28
Alternating System of Electrical Distribution, The 358
Can Speech be Transmitted with the Bored-Block Transmitter of Philipp Reis ? 281
Correction, A 202
Distribution of Electricity by Induction Coils 28
Distribution by Transformers ... 451
Field Magnets of Dynamos 28
Further Word on "Underwriters" Wire, A 201
Gutman Transformers, The—A Correction 451
Pacific Coast Telegraph Notes 451
Patent Office Examinations 233

PAGE.

Patent Office Examinations from an American Point of View. .. 282
Reis Bored-Block Transmitter—Can Speech be Transmitted with 281
Reis Telephone Controversy, The. 496
Reis "Bored-Block" Telephone, The—A Correction 358
Reis Telephone, The 412, 451
Report of the Committeeon Insulation and Installation of the Electric Light Association, The. 360
Sub-divided Transformers 414
"Telephone," The Use of the Word 201
Transformers, Sub-divided 414
Transformers, The Gutman, A Correction 451
"Underwriters" Wire, A Further Word on 201
Use of the Word "Telephone, The" 201
Wire Gauge Proposed by the National Electric Light Association, The 283

Correspondence—

Boston 26, 73, 124, 154, 198, 231, 278, 318, 357, 410, 449, 495
Chicago 27, 74, 125, 156, 200, 232, 280, 319, 357, 411, 450, 495
New York and Vicinity ... 25, 72, 123, 152, 197, 230, 277, 317, 356, 409, 447, 493
Philadelphia 25, 73, 124, 153, 198, 230, 278, 318, 356, 409, 448, 494
San Francisco 74, 156, 201, 320

Inventors' Record—

Classified List of United States Electrical Patents .. 40, 80, 128, 168, 208, 248, 288, 328, 384, 424, 464, 504

Authors—

Addenbrooke, G. L. 491
Adams, W. 474
Anthony, W. A. 61, 220
Blodgett, G. W. 266
Baxter, W., Jr. 99
Bernstein, A. 28
Brooks, D. 83, 224
Brown, J. 68
Clifford, H. E. H. 226
Cardew, T. 308
Carswell, T. P. 438
Cuttriss, C. 482
Deprez, M. 70
Dolbear, A. E. 497
Ewing, J. A. & Low W. 408
Fontaine, J. H. 70
Fujioka, I. 111
Fitz-Gerald, D. G. 195, 269
Fleetwood, C. T. 274
Forbes, G. 428
Graff, G. W., Jr. 192
Gutmann, L. 415, 451
Hering, C. 4, 9, 63, 85, 144, 171, 182, 185, 218, 251, 292, 304, 354, 387, 431, 487
Hopkinson, J. & E. H. 19, 51
Hospitalier, M. 8
Hall, E. J., Jr. 446
Haskins, C. C. 93
Hopkinson, J. 138
Houston, E. J. 353, 412
Jamms, F. 194, 283
Jackson, D. C. 148, 202, 220, 221
Kennedy, R. 187, 257, 299
Kapp, G. 401
Kintner, C. J. 451, 467
Levy, M. 29
Levison, W. G. 49
Lodge, O. J. 493, 434
Lockwood, T. D. .64, 131, 201, 480, 498
Martin, T. C. 15, 227
Miller, F. M. 13
Moses, O. 28
Murdoch, J. B. 346
Mailloux, C. O. 351
Mitchell, R. 451
Miller, I. N. 201
Madsen, C. L. 149
Prescott, Geo., Jr. 469
Pope, F. L. 332
Preece, W. H. 406, 439
Perkins, J. McC. 195, 233
Powers, J. A. 215
Reckenzaun, A. 50, 104, 173, 229, 262, 302, 349, 390, 395
Remington, G. H. 7
Rosenbrugh, A. M. 183
Rowland, H. A. 189
Roberts, E. P. 224
Roberts-Austin, W. C. 309
Shaw, W. N. 149
Sprague, F. J. 96
Stanley W., Jr. 28, 358
Snyder, M. B. 44
Siemens, W. 87
Sunny, B. E. 442
Slattery, M. M. M. 344
Steuart, A. 89
Stein, T. 281, 358
Thomson, W. 441, 442
Thomson, E. 211
Thompson, S. P. 311
Vail, Alfred 342
Van Dyck, F. C. 431
Webber, C. E. 65, 101
Wetzler, J. 90
Weeks, E. R. 92
Wheeler, S. S. 119
Welles, F. R. 284
Watt, A. 300
Woodbury, C. J. H. 427, 486
Wharton, W., Jr. 443

Digitized by Google

THE ELECTRICIAN
AND
ELECTRICAL ENGINEER.

THE ELECTRICIAN
AND
ELECTRICAL ENGINEER.

Conducted by F. L. POPE. C. M. PHILLIPS, JR., R. W. POPE, Associate Editors.

PUBLISHED MONTHLY BY
THE ELECTRICAL PUBLISHING CO.,
115 Nassau Street, New York city.

European Agent, F. H. WEBB, 4, The Sanctuary, Westminster London, S.W., Eng.

TERMS OF SUBSCRIPTION.

United States and Canada, - - - - - - -	per annum,	$3.00
Four or more Copies, in Clubs (each) - - - - - -	"	2.50
One Copy, Four Months, - - - - - - - - -		1.00
Great Britain and other Foreign Countries within the Postal Union	"	4.00
Single Copies, - - - - - - - - - - -		.25

[*Entered at the Post Office at New York, N. Y., as second class mail matter.*]

EDITORIAL ANNOUNCEMENTS.

Addresses.—*Business letters should be addressed and drafts, checks and post-office orders made payable to the order of the* ELECTRICAL PUBLISHING CO. *Communications for the attention of the editors should be addressed,* EDITOR OF THE ELECTRICIAN AND ELECTRICAL ENGINEER, 115 *Nassau Street, New York city.*

Communications *suitable for our columns will be welcomed from any quarter. Discussions of subjects relating to all branches of electro-technical work, by persons practically acquainted with them, are especially desired. Unavailable and rejected manuscripts will be returned only when accompanied by the necessary postage.*

Advertisements.—*We can entertain no proposition to publish anything for pay, or in consideration of advertising patronage, except in our advertising columns. Our editorial columns will express our own opinions only, and we shall present in other columns only such matter as we consider of interest or value to our readers.*

NEW YORK, JANUARY, 1887.

ANNOUNCEMENT TO SUBSCRIBERS.

WE are pleased to recognize the fact that a principal source of the growth of our subscription list is the favorable commendation of the ELECTRICIAN AND ELECTRICAL ENGINEER by those who are already subscribers, to their friends and acquaintances

We shall continue our endeavors to deserve your appreciation and good-will, by keeping up, and if possible improving the quality of our paper. To any of our present readers who may find it in their way to increase our list, we offer rates for 1887 as follows:

For your own subscription	and	1	new name	.....	$5	00
"	"	"	"	2	"	.....	7	00
"	"	"	"	3	"	.....	9	00
"	"	"	"	4	"	.....	10	00

This offer will hold good until April 1st.

The *Telegraphic Journal and Electrical Review*, London, will be supplied for one year in conjunction with the ELECTRICIAN AND ELECTRICAL ENGINEER for the additional sum of $4.00 with any subscription.

In addition to the usual methods prescribed for making remittances, money orders issued by the American, United States or Wells Fargo express companies will be found safe, cheap, and convenient.

Very respectfully yours,
ELECTRICAL PUBLISHING CO.,
115 Nassau St., New York.

STORAGE BATTERIES.—THE FAURE AND BRUSH PATENTS.

THE use of storage batteries, or accumulators, has met with a somewhat tardier development in this country than in Europe. Since the discovery was announced a few years ago of the mechanical method of preparing the electrodes for receiving a charge, thus supplanting the tedious electrical process of forming, requisite in Planté's secondary battery, there have not been wanting many believers in the ultimate commercial success of electrical accumulators as a very important addition to the resources of electrical engineering. While inventors directed their efforts to devise further improvements, schemes of considerable magnitude were set afoot through the organization of stock companies to acquire patent rights and develop the expected business by the manufacture and sale or renting of accumulators. The early attempts in this direction were not very successful as practical business undertakings, however greatly they may have redounded to the profit of speculators in patents. Legal complications arose, through claims of rival interests to the control of patents; and such an entanglement ensued as to suggest that some of the methods of the illustrious Philipart had been acquired by the enterprising gentlemen engaged in exploiting patents for foreign inventions in storage batteries. The methods of construction of the batteries had not yet been sufficiently developed to produce a trustworthy commercial accumulator.

Meantime, Mr. Charles F. Brush was busy following up his early invention in storage batteries, and supplementing it by efforts directed to the improvement of details of construction. Mr. Brush has been one of the persistent believers in the future efficiency and importance of electrical storage. His storage battery is now, and has been for a long time, in constant service by the Pennsylvania Railroad Co., in its drawing room cars.

The Brush Electric Co., of Cleveland, Ohio, own the Brush patents for storage batteries. They are building and perfecting a battery which, like the Faure battery, has mechanically formed plates.

Through the organization of the Electrical Accumulator Co., which, in a recent circular, announces its readiness to supply accumulators for a variety of uses, "combining the invention of Faure and improvements thereon," the greater part, if not all, of the conflicting interests and ownerships in the Faure and other patents, alluded to above, are understood to have been consolidated and brought under the control of that company. As our readers are doubtless aware, the company has been organized and is managed by men of wide experience in electrical business and of recognized ability in corporation management. Their confidence in the future of the business which they have undertaken is attested by the establishment of their factory at Newark, where they are now

Digitized by Google

producing accumulators; and by the guaranty of efficiency which is offered with accumulators sold by them.

The fundamental feature in the making of the storage battery for practical use and commercial business is clearly the substitution of the mechanical preparation of the plates for the slow process of electrical formation as practiced in the Planté battery. For the control of the invention of mechanically formed electrodes there is likely to be a contest.

The Faure patent of January 3d, 1882, No. 252,002, and the Brush patents of March 2d, 1886, Nos. 337,298 and 337,299, appear to cover substantially the same invention, to wit, the mechanical formation of electrodes ready to receive a charge, in contradistinction to the electrically formed electrodes previously well known. Faure's invention was patented in France, October 20th, 1880. His application for a United States patent was filed April 20th, 1881. Brush's applications were filed June 12th and 13th, 1881, respectively. Whether by oversight on the part of the patent office or otherwise, the Faure patent of January 3d, 1882, was issued, notwithstanding the pendency of Brush's applications.

As soon as the Faure patent issued and the claim became public, Brush took the only course that was open to him. He demanded an interference between his applications (of which there were several) and the Faure patent, and publicly announced in the New York press on May 17th, 1882, his rights and claims in the matter, and that they would be enforced. The interference was declared May 13th, 1882. Two other parallel interferences were also declared and another application by Faure was included, and other parties and claimants to the broad invention were brought in. Eventually the three interferences were entitled respectively, Keith *vs.* Shaw *vs.* Maloney & Burger *vs.* Brush *vs.* Faure; Keith *vs.* Shaw *vs.* Brush *vs.* Faure; and Maloney & Burger *vs.* Brush *vs.* Faure. And they proceeded together, the issues or claims involved varying slightly in the three interferences, but including the broad generic claim to the mechanical process and battery as distinguished from Planté's.

These proceedings in the patent office were greatly prolonged through motions to postpone the interferences, which were appealed through every tribunal to the secretary of the interior. Pending these delays in the patent office, and about four years ago, the Faure people began a suit for infringement of the Faure patent against the Brush company. An answer was promptly filed by the Brush company, but the Faure people, apparently, have never since taken any further steps forward with the suit. In the patent office proceedings, the testimony of all parties was finally completed and the interferences argued, and decided, all three of them, in favor of Brush, and on the resulting appeals those decisions were all sustained, and patents were in consequence issued to Brush on March 2d, 1886. The decision of the interferences in favor of Brush, and the issue of his patents, exhaust the powers of the patent office in determining title to the invention, inasmuch as the patent office cannot annul a patent once issued. As evidence they create a presumption in favor of Brush, but the control of the invention must be finally adjudicated in the courts.

The Brush Electric Co. announce their purpose to retain in their own hands the business of manufacturing, selling and using mechanically formed storage batteries or plates, and to enforce their rights under the Brush patents in the courts, against any and all who may build, sell, or use such batteries.

There seems to be no good reason to doubt that storage batteries, sufficiently improved—in the troublesome details of construction that have so long retarded their success—as to be conveniently manageable, will soon be freely offered for general electrical purposes.

DEGENERATION IN DISTRICT MESSENGER SERVICE.

Time was when the average District Telegraph messenger bore some likeness, in both appearance and gait, to the bright, tidy and swift-footed youth depicted still on the sign-boards of the District Telegraph companies. In those good days the neatly dressed messenger boy came promptly when called, entered room or office quietly and politely, and, best of all, went about his errand in a manner indicating some drilling in carefulness and despatch. The service was good in all points. One could depend on having any sort of errand well and speedily done.

Now-a-days the service is undeniably poor; the old type of messenger seems to be well-nigh extinct; instead of him, with his good manners and efficiency, the messenger of to-day is a more or less unkempt youth, who lounges or plunges into one's room, announcing his arrival, at the threshold, with a vociferous cry of "*Call*," often after tiresome waiting and repeated calls on the part of a subscriber. His slovenly appearance and boisterous demeanor, however disagreeable, are less serious annoyances than his frequent tardiness and incompetency. He could be forgiven much if he would only come quickly when called, and "get there" promptly when despatched on an errand. He sometimes seems to be totally ignorant of the topography of the city, and requires, in addition to street and number written on parcels entrusted to him, minute verbal directions as to localities and streets. Car fare is a perennial subject of interest to him; a suggestion from him on that point is forthcoming on the slightest provocation.

The peculiarities of his progress through the streets are suggestively amusing to an observer who is not at the time awaiting service at his hands. Peanuts and apples engross a fair share of his attention; a serene and deliberate survey of the architecture of the vicinity sometimes absorbs all his powers; an accident or disturbance anywhere within reach of his eyes or ears draws him into the front rank of the surrounding crowd; in fact, he seems to realize and improve to the full his excellent opportunities of observing and enjoying the street sights of the city. When these fail him his fertile mind is often equal to the task of providing some diversion from the tedium of a long and uneventful walk.

But let us not be too hard on the boys. They are neither better nor worse than other boys of similar age and occupation. Boys and men are rare who render better service than they are trained for and required to perform. There is every indication that the present generally observed inefficiency of the messenger service of the District

Digitized by Google

Telegraph companies is due to a lack of necessary training and discipline of the boys, on the part of the managers. The service when well regulated is an invaluable convenience to the public. It is a pleasant reminiscence to recall the promptness and courtesy of the earlier messenger boys. We believe that systematic instruction and drilling of the force was part of the management in times past. If still kept up, it must be in a very formal and perfunctory manner, lacking any element of painstaking or thoroughness.

We trust that the service need not still further deteriorate before an effort shall be made to restore it to its former efficiency.

LONG-DISTANCE TELEPHONY.

The American Telephone and Telegraph Company have made such substantial progress in their work as to have now twenty-four wires between New York and Philadelphia ready for service. It is some weeks since the lines were put to use, although they have not yet been formally opened to the public. The practical success of telephonic conversation over these lines seems quite perfect. By the use of metallic circuits induction disturbance is eliminated. The service is quite as good as on ordinary city lines; better than on many of the latter, on which fizzing, buzzing and rapping, occasionally disturb the serenity and ruffle the temper of any but the most angelic subscribers. The long-distance telephone service can hardly fail of hearty appreciation and extensive use on the part of business men. Its use for five minutes will often serve all the purposes of a personal interview, and should save many inconvenient and expensive journeys between cities connected by telephone. It has a large legitimate field without trenching upon the sphere of the telegraph; although it seems to us that when generally established, and when the public shall have become well acquainted with its facilities, it will in some measure reduce the amount of telegraphing. Possibly the result may be analogous to that of the competition between gas and electricity in the business of lighting. Men interested in gas lighting say that the introduction of electric lighting has in many localities effected an increase in the consumption of gas; that it has created a demand for more light. Be that as it may, we cannot have too many, nor too good, nor too far-reaching means of quick communication.

In the informal use of the lines between New York and Philadelphia during the past few weeks, a somewhat amusing difficulty was developed, having its origin in the average American's quick scent for "chaff." We happened to be in the office of the company in Philadelphia some two weeks ago, and were impressed by the rapidly rising wrath of a gentleman endeavoring to communicate with a New York correspondent, and obviously meeting with exasperating and insurmountable obstruction. After repeated vain attempts the gentleman gave it up. He had been duly connected with the proper party in New York, the telephones worked perfectly, but he had utterly failed to convince the New York party that his telephone was connected with Philadelphia, receiving nothing but derisive replies to his repeated asseverations that he was veritably himself, and talking from that city. We were informed by the manager that this was but one of several similar occurrences.

It was a happy thought of the Council of the American Institute of Electrical Engineers to attempt monthly meetings of the Institute, at which a dinner precedes the paper and discussion of the evening. The presence of some 30 members, December 7th, and their hearty enjoyment of the social feature of the evening, as well as their general interest and participation in the discussion of Mr. Martin's excellent paper on Electric Street Railways, were conclusive evidence of the acceptability of the plan of monthly evening meetings. We print Mr. Martin's paper, and the subsequent discussion, in full, in the present number.

The air is again thick with rumors of consolidation arrangements between the Western Union and Baltimore and Ohio Telegraph companies, although the usual denials of anything of the sort from prominent officials of both companies are not published. Rumors come and rumors go, but the sending of telegrams goes on forever; and we have little doubt that the business community would be pleased to continue telegraphing between important centres of trade at present low rates rather than to see the principal competitors for their business strike hands and put up charges.

The total number of messages sent by the Western Union Telegraph Co., year ending June 30th, 1886, is given as 43,289,807. Assuming that 15,000,000 to 20,000,000 messages were sent by all other companies in the country, the somewhat interesting result appears that the whole number of telegrams for the year was about one per head of population.

Continuing our graphic analysis of the business of the Western Union Telegraph Co. for twenty years, from the figures of the president's report of 1886, we print in another column a chart showing average tolls and average cost per message for each year since 1866.

Professor Anthony favors us with a copy of the "Examination in Electrical Measurements, Course of Electrical Engineering, Cornell University, Fall Term, 1886," which we print in another column. The questions indicate the high order of instruction furnished at Cornell. It seems particularly fitting that this University, whose founder was so closely related to the establishment and development of the electric telegraph, should assume a leading position in electrical instruction.

The interest taken by gas companies throughout the country in electric lighting is very noticeable. Our news columns, as well as those of other electrical and trade journals contain a constantly increasing number of notices of gas light companies adding electric lighting to their business or seeking charter privilege to do so.

Our valued, but modest, contributor, Mr. Carl Hering, writes us to say "You made an error in stating in your journal that I was the electrician of the Philadelphia Exhibition of 1884. In justice to Professor Thurston, I must call your attention to the fact that I had the title of assistant electrician and nothing more." This refers to our list of contributors in our prospectus for 1887, in which we named Mr. Hering as "Electrician of the Electrical Exhibition at Philadelphia, 1884." Our readers who are well acquainted with the position of Prof. Thurston in the Electrical Exhibition, will doubtless have made the correction for themselves.

Digitized by Google

ARTICLES.

INCANDESCENT LIGHT LEADS.

BY CARL HERING.

As incandescent lamps are connected in multiple arc, and as they require to have a constant potential at their poles, there must in all cases be a higher potential at the machine, and a loss of potential in the leads. As this loss of potential depends on the resistance of the leads and the current in them, it remains constant only for the same resistance and current, and, therefore, when the lamps are cut out the current will change and consequently also the potential, or in other words the lamps will have their potential increased when their number is reduced, and *vice versa*.

The only ideally perfect method of running incandescent lamps therefore, is to have a pair of independent leads from each separate lamp to the dynamo, and to have them all of the same resistance, in which case the cross-section will be increased directly as the distance, that is for double the distance the leads will have double the cross-section, or four times the weight. This will evidently be a perfectly self-regulating system, but it would in most cases be too expensive, as for 100 lamps there would be 200 leads. There is however one important point about such a system which is greatly in its favor. There are two expenses to be considered, one the cost of the power lost in the leads and the other the interest on the copper conductors; both of these are running expenses. If we start with very heavy leads and calculate these two expenses for successive diminutions in the size of the leads, we will obtain the results about as shown by the two curves in figure 1. The

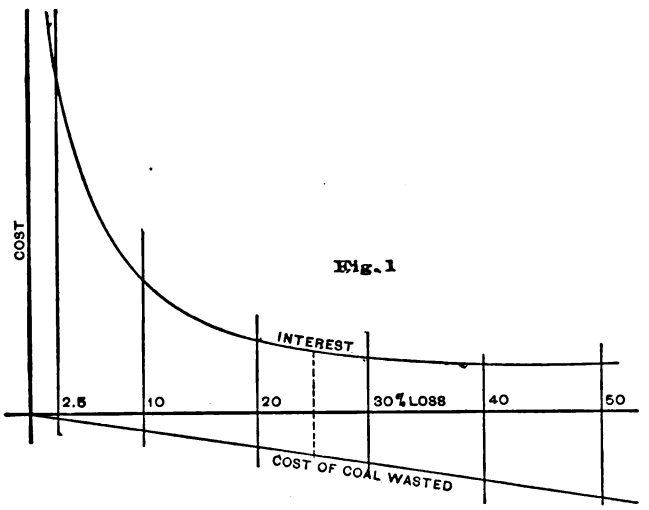

Fig. 1

upper curve is the interest on the copper for different losses in the leads and the lower, which is a straight line, the cost of the lost power. The sum of the two, that is the distance between them, represents the total expense, which in this particular case was least when the loss of potential in the leads was about 22 per cent. This result may at first seem surprising, but it will be seen that the power expense is very small as compared to that of the copper. If the lamps are burned only a small portion of the day, the loss of potential may even be taken still greater as the interest is for the full time and the duration of the power loss is less. In the ordinary system such a great loss in the leads cannot be allowed, as it would not be self-regulating when lamps are cut out.

In cases where all the lamps are always in circuit, such a heavy loss may safely be allowed even in the ordinary system, thus effecting a great saving in expense, both first cost and running; it is necessary in that case to replace a lamp as soon as it goes out, otherwise the others will soon all follow in turn. In cases where whole groups of lamps are cut out at one time, a separate pair of mains may be laid to each group from the dynamo, and the system will then be self-regulating, while the loss in the leads may be taken as quite great, say 15 to 20 per cent., thus saving considerable copper.

In the ingenious system of Gordon's divided main, from a description of which figure 4 was taken, this principle of small mains is made use of by dividing the main from the dynamo to a point in the midst of the lamps into a number of smaller insulated mains, which are in turn cut out at the dynamo end as the lamps are cut out, thus accomplishing practically the same results as those of the method first described. Perfect regulation, and great saving of expense may thus be accomplished.

The next best way to insure approximate regulation of constant potential at the lamps, is to make the conductor so thick that the fall of potential will be so small that its variation will be insignificant. This is the ordinary method in which the loss of potential allowed may be 2, 3, and even 4 or 5 per cent., the latter only in cases where the leads are well distributed with reference to the lamps. In such a system a pair of mains should be laid from the dynamo to near the centre of the group of lamps to be supplied by these mains, and from this point only, should the branch or distributing wires be laid to the lamps. These distributing wires should all be calculated for the same loss of potential, and should therefore be thicker the farther the lamp. In a good system it is preferable, when distances are great, to run separate distributing wires to each group, as in figure 3, in preference to running one secondary pair of mains from which lamps are supplied at various distances, as in figure 2. When lamps are situated near the

Fig. 2

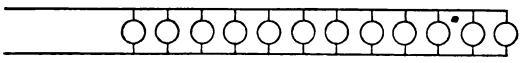

course of the principal mains, it is preferable, when distances are great, and when a comparatively great fall of potential is allowed, to run a pair of distributing leads from the ends of the mains back to the lamps, rather than to connect the lamps directly to the mains, or else to use comparatively high resistance distributing wires direct from the nearest point on the mains.

In this system the mains are generally very large, and in order to facilitate laying and handling, it is generally found preferable to use a number of thick wires in parallel. These separate wires usually have their ends permanently connected with each other at the distribution centre. But as will be seen by comparing this system with the one first mentioned, a much better distribution may be had with these same parallel wires by connecting each one to a separate independent group of lamps, instead of connecting them all with one another at the distribution centre. The increase of potential due to cutting out lamps is then much

Fig. 3

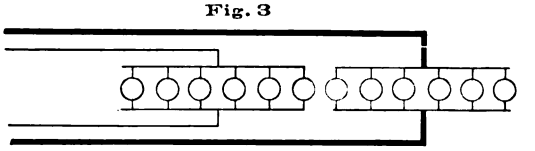

smaller than if the parallel wires act as one main; it approaches more nearly to the so-called perfect system.

The practice of having lamps requiring slightly different potentials, for different distance along the mains, is not good, except where the groups are entirely distinct and separate, as in different buildings for instance, and even then it is preferable if not essential, to have separate independent mains from the dynamo to each group.

In cases where there are many lamps between two parallel mains, as in figure 2, it is bad practice to diminish

Digitized by Google

the size of the leads toward the end, when the distances are great; it should on the contrary be increased, or at least be equally large, in order to approximate to constant potential. When in this case the number of lamps is large, it is preferable to run several pairs of mains to successive groups, making the longer mains thicker, as shown in figure 3.

A very good system, which however is limited in its application owing to the position of the lamps, is to run the mains as shown in figure 4. The fall of potential, or resistance of the leads, will evidently be constant for each

Fig. 4

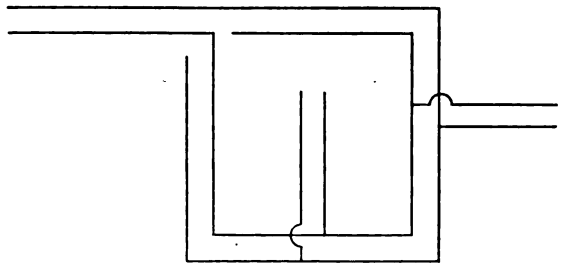

lamp as long as they are all burning, but for variations in the numbers of lamps it is only approximately self-regulating like the others. When all lamps are always in circuit, this system permits of great saving of copper, at the same time giving equal potentials, when the loss of potential allowed is quite great, say 15 to 20 per cent.

In cases where a single pair of mains is laid from the dynamo to a distributing centre at some distance from the machine, a considerable saving of copper may be effected and at the same time some power saved, if the potential is maintained constant at the distributing centre, but increased at the dynamo proportionately to the number of lamps burning. In this case the mains may be made small, and the loss in them comparatively great; the percentage of power lost in the mains then evidently decreases with the number of lamps. This system is even better than the first one described and termed the ideally perfect system, provided the leads are well distributed from the ends of the mains, as it saves more power and requires only one pair of mains for the greater part of the distance, instead of a large number of separately insulated small wires. It is however limited in its application to special cases, in which a group of lamps is at a comparatively great distance from the machine, and only one such group can be supplied by a machine. Furthermore, the machine has to be regulated to increase its potential in a certain proportion with the current. This can readily be done in compound machines, if the series windings be increased sufficiently to make this difference. If the machine is regulated by hand or by an automatic regulator, a pair of small return leads may be laid from the distributing centre back to the regulator, the potential of these wires, that is, that at the distributing centre, must then be maintained constant, and that at the machine, therefore, increased.

To illustrate this method of distribution by an example, let us suppose 150 lamps of 100 volts and .6 amperes, to be run in a group at 2,000 feet from the machine. Assume first a loss of potential of 25 per cent. in the mains; the greatest potential at the dynamo will therefore have to be $\frac{100}{75} = 133.$ volts; that is, there will be 33 volts lost in the mains. As the greatest current is $150 \times .6 = 90$ amperes, the resistance of the mains must be $\frac{33}{90} = .37$ ohms, and as the length is 4,000 feet, it will require about a No. 0, B. and S. wire. When only one lamp is burning the fall of potential will be $.6 \times .37 = .22$ volts, making the potential at the machine practically 100 volts, and the variation from 100 to 133 volts. The mains will not heat too much as this wire will carry 90 amperes without danger. To compare this with the ordinary method, allow say 4 volts or 4 per cent. loss in the mains; the resistance will have to be $\frac{4}{90} = .0444$ ohms for 4,000 feet, or in other words, it will have to be 9 times as great in cross-section, that is, 18 wires, size 0, or an increase of 16 lengths of 2,000 feet each, above what was required in the first case. The interest per day on this additional amount of wire and on the cost of laying it, will be found to be slightly greater than the extra cost of the excess of power lost in the first case over that lost in the second, that is the difference between 25 per cent. and 4 per cent. Better regulation will be effected for the smaller mains than for the larger ones, provided the machine regulates well; for in the latter case the potential will vary 4 volts at the distributing centre, while it will be constant in the former. The best proportions will vary for different circumstances, and should therefore be determined for each case. The smaller mains will be more economical for greater distances, and *vice versa*.

The three-wire system is well known to all. It is limited in its application to cases in which the two groups of lamps are always nearly equal; if for instance, all the lamps of one group, that is between two of the three mains, be turned off, the fall of potential will be very great, and the regulation very bad.

Another system which is quite similar to this one, but has the advantage that only one machine of double the potential is required, instead of two as in the Edison three-wire system, is used by the Keystone company in their central station plant in Philadelphia. It is shown in figure 5. A compensating group of lamps is kept at the station,

Fig. 5

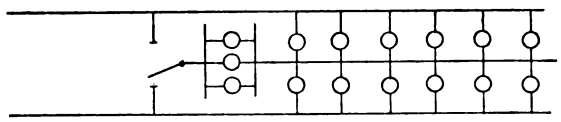

and is so connected that it can be switched into either side of the equalizing lead; thus restoring the balance. This is not automatic, and therefore requires constant attendance.

Numerous rules, formulæ and tables have been published, for determining the size of leads for incandescent lighting, most of which, however, are more or less complicated, and will therefore find limited use in practice, the natural result of which is that instead of properly determining the leads the engineer will use his "judgment" in selecting the sizes, which is little short of guessing. In cases where tables are used considerable calculation is necessary to make the tables, and a new set has to be made for a lamp of a different current or potential.

In order to meet the demands of good engineering practice, which are: reliability of the method, labor saving in the calculations, accuracy of results, flexibility and simplicity of the method, and freedom from errors of complicated calculations—the writer has devised the following method which is found by extended experience to answer all these requirements.

As described before, the leads must be calculated for a certain allowable loss of potential in them. This is ordinarily from two to five per cent., the greater of which should be allowed only when the number of lamps cut out at any time is not a very large proportion.

Let V be the number of volts lost in the leads,
R the resistance of the leads,
C the current in them,
A the cross-sectional area of the lead in square mils,
L the length in feet of the whole lead.

Then
$$C = \frac{V}{R} \text{ and } R = \frac{L}{A}\ 8.22$$

from which the general formula is deduced, namely:

$$A = \frac{C\,L}{V}\ 8.22,$$

Digitized by Google

or if D is the distance from dynamo to lamps, in which case $L = 2\,D$, then

$$A = \frac{C\,D}{V}\ 16.44.$$

This formula is quite general and is applicable to all lamps or losses of potential. The constant 16.44 is not an arbitrary one, as is sometimes supposed, but depends only on the resistance of the copper, as shown above.

In practice this formula would be used in a simpler form, as we may substitute for C the number of lamps n multiplied by the constant current c for one lamp, and as the loss of potential is a constant for a certain installation, it may be combined with the constant, 16.44, thus giving the simple form

$$A = n\,d\left(\frac{16.44\,c}{V}\right)$$

in which the latter quantity is calculated once for all. Thus the cross-section is the number of lamps multiplied by the distance in feet and by a constant. For 4.11 volts loss of potential, and .75 amperes per lamp, this reduces to

$$A = 3\,n\,d;$$

that is, the lamp-distance, or lamp-feet multiplied by three is the cross-section. By means of a table of cross-sections of the different sizes of wire, such as every electrician has, or such as was published in the ELECTRICIAN AND ELECTRICAL ENGINEER, pp. 182 or 268, vol. v, the diameters or gauge numbers may be found directly without calculation, from the cross-sections. It is especially convenient when several wires are to be used in parallel.

The formula might be made to give the diameter directly, but this is not to be recommended as it involves a square root calculation which is objectionable except for single cases.

In cases in which a great fall of potential is allowed, in which the wires will heat slightly, the resistance constant 8.22 must be taken slightly higher. In most of such cases it will suffice to take the cross-section slightly greater than that given by the formula, instead of changing the constant.

In general, the mains lead to a distributing centre, and should, therefore, be calculated separately for a certain part of the loss of potential, while the distributing leads should be calculated for the rest of the loss. If a portion of the lamps are at a considerable distance from this distributing centre, they should have a separate independent sub-main from the distribution point, which will then allow the same fall of potential for these lamps as for all the others. There is no reason other than economy of copper why the distant lamps of a group should not have the same potential as the rest, and be maintained as nearly constant as the rest.

For calculating the size of leads the ordinary mechanic's slide rule may be very highly recommended, as by means of it the computations may be made in almost the same time as it would otherwise take to write down the figures, while the chances of making a mistake are not nearly as great as in the ordinary calculation, unless it is checked. Even the diameter can then be readily found with but a very slight additional adjustment of the slide, thus avoiding entirely the use of any tables.

When many computations have to be made, as for instance in a somewhat complicated system of distribution, the following graphical method will be found not only to save considerable time, but also to reduce to a great extent the probability of an error in the calculation. On a piece of accurately prepared cross-section paper (the decimal lithographed preferred to the ruled), mark the figures and lines as shown in part in figure 6. A convenient size is about 18 inches high and two feet long. In the first vertical column mark off, to a convenient scale, the cross-sections embracing the range of wires used for leads. In the next column mark off the sizes of the wire in numbers of the gauge used, corresponding to their proper areas of cross-section in the first column, as obtained from a table. In a third column may, if desired, be laid off similarly the diameters of the sizes of wire obtainable, in the proper places with reference to the first column. These three columns will then correspond to a table of cross-sections, diameters, and gauge numbers. Through the points of the second column, and any in the third corresponding to sizes used, draw bold horizontal lines. On the upper side of the paper mark off in ten-thousandths, numbers ranging from 1 to about 200,000.

Fig. 6

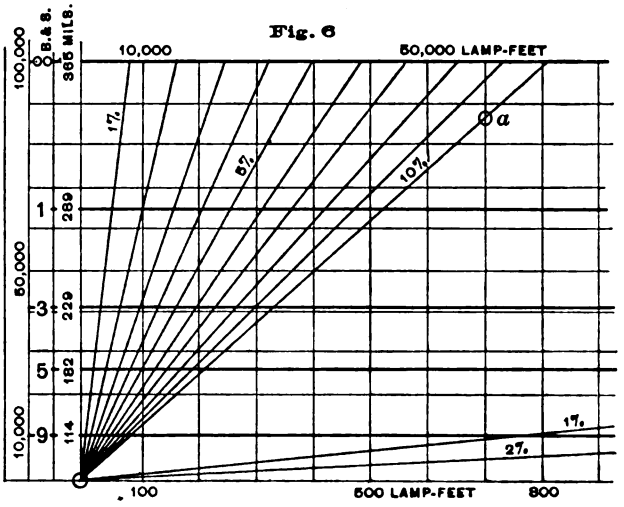

For the particular lamp for which the scales are to be made, calculate, from the formula, the required cross-section for any fixed number of lamps at any fixed distance, for a loss of potential of 10 per cent. Mark off this point, a, in its proper position, considering the figures in the horizontal scale to represent lamp-feet, that is number of lamps multiplied by the distance to the dynamo in feet. Draw a straight line through this point, and the zero point. Similarly, draw the other radial lines corresponding to the other percentages of loss to be used, which can be done best by dividing the horizontal distance from the first line to the zero line into ten parts, and drawing a radial line through each one, thus each will represent one per cent. loss, as shown. If greater loss of potential is allowed, the corresponding lines should also be drawn. It is then ready for use.

To use it, multiply the number of lamps by the distance, find this number on the horizontal scale and follow it to the radial line which represents the percentage of loss; the cross-section, diameter, or gauge number is then found directly from the numbers in the vertical columns corresponding to the position of this point.

Such a graphical method will be found to save very much time, particularly when it is desired to make the estimate for several different systems of distribution, in order to find the most economical one. It is free from the errors which are liable to occur in tables, and takes only a very short time to prepare. Its range may easily be made very great, thus corresponding to a very large set of tables, which would require much time to prepare.

The point for determining the radial line should be chosen as far from the zero point as possible, in order to locate the line as accurately as possible.

In order to increase the accuracy for a small number of lamp-feet, that is, for the small distributing wires, a second horizontal scale of smaller numbers may be laid off, say at the bottom, and a second set of radial lines, drawn say in a different color, may be determined for these numbers. For still other ranges the cross-sections may be supposed to represent 10 or 100 times those in the column, and the corresponding scale of lamp-feet be found for the radial

Digitized by Google

lines already drawn, in which case the figures should be marked in a distinct color in order to avoid confusion. In that case the diameters and gauge numbers will no longer correspond with those new cross-sections.

GRISWOLD'S TORPEDO-BOAT.

BY GEO. H. REMINGTON.

An exhibition of Griswold's torpedo-boat was given before a party of gentlemen, at Providence, R. I., a short time ago; the larger proportion of the spectators being manufacturers, mechanics and engineers, who were capable of comprehending the mechanical construction of the invention.

The boat, or rather model, is about six feet long and eight inch beam, made of copper and having very fine lines, in fact it is modeled from one of the government's torpedo boats. The deck is glass-covered and water-tight, rendering the interior mechanism visible. In service the boat is designed to be submarine—the inventor, Mr. Horace P. Griswold, of Providence, having devised an arrangement for automatically maintaining it at any depth to which it may be gauged—although the model has a free-board of about three-fourths of an inch. A six-cell battery, carried amidships, furnishes the power required for propelling and steering. What appears to be a very novel feature of the invention is the automatic steering arrangement, which consists of a compass having a finger adjustably secured thereto, engaging a light vertically-forked two-arm lever pivoted to and carried by a disc secured to a spindle adapted to be intermittently revolved. Each end of the two-arm lever being adapted to engage a small mercury cup, from which conducting wires electrically connect with magnets placed astern near the rudder. The armatures of the magnets are secured to a rod, supported in bearings, from which depend two arms, carrying a continuously revolving shaft, having a worm thereon adapted to engage wheels mounted on either side, which in turn connect with the rudder. Now, if the boat varies from its true course, the movement of the compass (being the natural magnetic attraction) causes the corresponding arm of the lever to engage a mercury cup, and instantly excite the steering magnets, thereby attracting the armature and swinging the revolving worm into connection with the corresponding wheel, and causing the rudder to move in the desired direction to resume the course. As the boat becomes "steady" the arm of the lever is automatically withdrawn from the mercury, thus breaking the circuit.

The movement of the intermittently revolving spindle, before referred to, is effected by pins mounted in a continuously (but slowly) revolving wheel, combined with an escapement lever, engaging overhanging pins adjustably mounted in the disc. This part of the invention constitutes the manner of pre-arranging the distance and course the boat is to take. That is to say, the angular distance between any two pins represents, say, 100 yards, while the angular distance between the pins of the disc of the compass represents the degrees in which the boat is to turn.

At the trial the first course selected for the boat to run was a quadrangular one, substantially the same as the diamond of a base ball field, each side thereof being about 100 yards.

After setting the several pins, both for angles and distance, and switching on the main current, the boat immediately started on its course (which was diagonal, and substantially south, east, north and finally west, to the starting point), its rate of speed being equal to that of a person walking rapidly. During the entire run no deviation whatever from a straight line was perceptible, except at the angular turns which were very short.

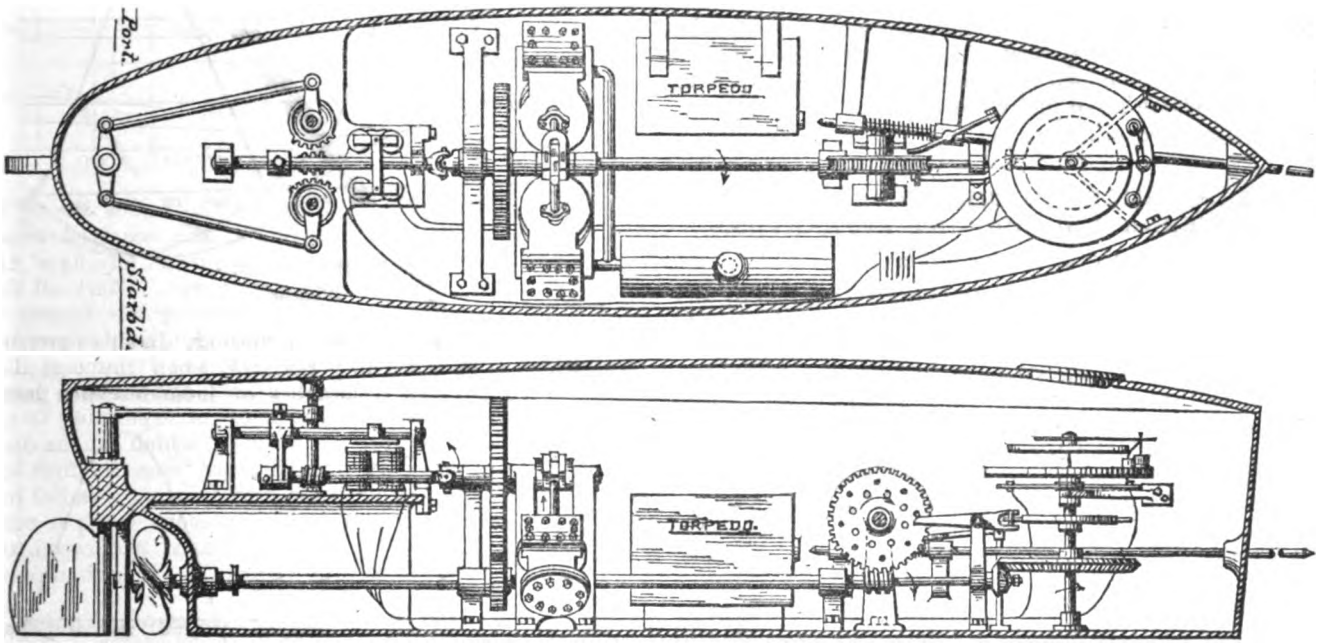

The boat at the termination of the run actually struck the wharf within *two feet of the starting point*, without doubt a feat never before accomplished; it being remembered that the boat had no connection whatever with the shore throughout the run; the whole being self-contained and the movements automatically made and controlled.

The next course selected was south-west about 150 yards, turning 180 degrees, and running about 100 yards, again turning 180 degrees and running south-west about 100 yards, and finally turning 180 degrees, and running back to within a few feet of the starting point. Several prominent gentlemen, including Hon. Henry J. Spooner, M. C., having arrived during this run, a request was made that the first course be repeated, which was done, and the boat returned to within a *few inches* of the starting point.

After making another single run out, of about 250 yards, and returning, the trial was concluded. The universal expression of those present was that the boat had accomplished an unparalleled feat in thus going out from the shore and returning thereto without being in the meantime assisted or controlled in its action from without.

Mr. Griswold states that in practical use the boat will be made about 18 feet long, and arranged to carry a torpedo

Digitized by Google

or explosive charge which is to be electrically fired by means of a firing-pin projecting from the bow of the boat coming in contact with the hull of an enemy's vessel, in which case the torpedo-boat as well as the enemy are destroyed.

In case, however, the boat should fail to meet an obstruction, it returns to the station—which may be a war vessel. Just before its arrival, a device automatically locks the firing-pin in position, thus rendering the boat safe in handling. At the same time a float is automatically released and the electric current or other motive power cut off, thus stopping the boat's progress.

It is almost impossible to conceive of the advantages possessed by this auxiliary to naval warfare.

The cost of the improved torpedo-boat is small compared with those now in use, and which are controlled by means of electric currents passing through a cable connected with the shore or station, and the boat.

In view of the reduced cost it has been suggested that a surface boat provided with the self-steering and propelling mechanism might be employed in exposed places along the coast by the light house and life saving stations, to communicate with the shore or with stranded vessels during the weather that the crews consider extra hazardous.

Mr. Griswold is to be congratulated upon so successful an exhibition of his invention. He certainly is deserving of great praise for his persistency in working out the problem in spite of many obstacles, and in the face of ridicule, and it is to be hoped that he may, ere long, meet with the reward which he so justly merits.

PROVIDENCE, R. I., November 13th, 1886.

THE MEASUREMENT OF THE POWER ABSORBED BY ALTERNATING CURRENT APPARATUS.[1]

BY M. HOSPITALIER.

WHEN we wish to determine the power absorbed by any electrical apparatus whatever, the simplest method is to measure the difference of potential in *volts* at the terminals of the apparatus, and the strength in *amperes* of the current passing through it: the product of these two quantities gives the electrical power absorbed in *watts*.

This method, which is exact when we are employing currents that are continuous or practically continuous, such as machines called continuous current machines, in which the variations of strength may be disregarded, is subject to certain reservations when periodical currents are used, especially in the case of alternating currents, and when the apparatus expending the electrical energy is the seat of more or less complex reactions from induction. In this case, the product of the indications of a Siemens electro-dynamometer by those of a Cardew voltmeter does not *a priori* give any reliable information as to the electrical power really expended, which may vary between a maximum, limited exactly by the product of the indications of the two measuring apparatus, and a minimum, the theoretical limit of which is zero.

The following diagrams are intended to show this clearly:—

Let us first consider a periodical electromotive force, sinusoidal in form, so as to simplify the reasoning, established between the terminals of a conductor, the co-efficient of self-induction of which is 0, or may be disregarded. The strength of current will be given each moment by the ratio of the electromotive force to the resistance of the circuit. By choosing the scales and the resistance of the circuit to suit our purpose, the numerical values of the current, I, and the electromotive force E, will be equal at each moment. If we take a complete period, and express on a diagram the time in abscissæ and the values of I and E in ordinates, we shall get two sinusoidal curves blended in the fine line of figure 1. The electrical power expended each moment will be equal to the product, E I, *i. e.*, to the square of E or of I, and represented by the thick curve of figure 1. The work absorbed during a complete period will

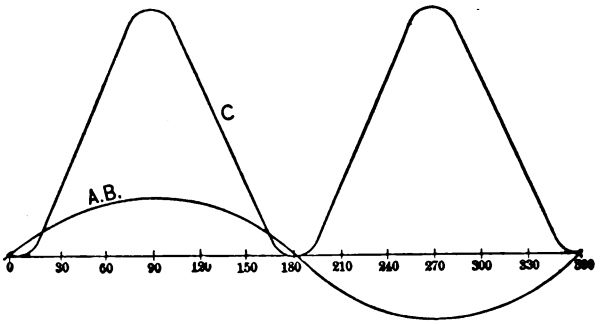

DIFFERENCE— 0° CONDUCTOR WITHOUT SELF-INDUCTION.

Fig. 1

be represented by the *positive surface* comprised between the axis of x and the two thick curves, figure 1.

The *mean* power corresponding will be the ratio of this

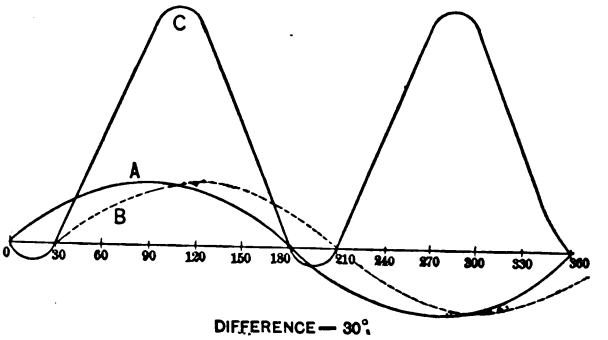

DIFFERENCE— 30°.

Fig. 2

surface to the duration, t, of the period. In this particular case, which is very sensibly realized when the periodical current feeds inert resistances or incandescence lamps,

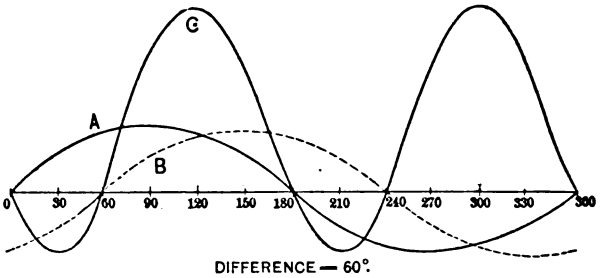

DIFFERENCE— 60°.

Fig. 3

there is no difference between the value of the mean electrical power actually expended and that which results from the product of the indications of the voltmeter and the

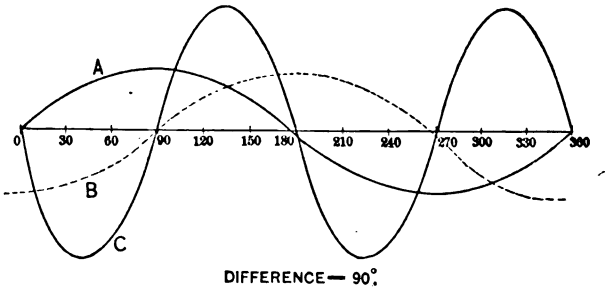

DIFFERENCE— 90°.

Fig. 4

electro-dynamometer. Let us now substitute for the ordinary resistance an apparatus presenting self-induction and mutual induction, such as a transformer.

1. From *L'Electricien*.

Digitized by Google

Theory shows that in this case there arises a *difference of phase* between the intensity of current, I, and the electromotive force, E, and that this difference may vary from 0° when the co-efficient of self-induction of the apparatus is 0 to a maximum of 90°, a theoretical limit which is never attained in practice. The determination of the exact value of this difference is very difficult, for it depends on the duration of the period, on the co-efficients of mutual induction, and of self-induction in the inductive and induced circuits of the apparatus to be measured, on the presence or absence of an iron core, of the greater or less magnetic saturation at the moment of the maximum current, &c. Experiment alone can make us acquainted with the value of this difference for every condition of working the circuit; but we may ascertain its influence by constructing curves corresponding to some of the special values that it may have. This is what has been done in figures 2, 3 and 4, which correspond respectively to 30, 60, and 90 degrees, supposing, be it understood, that the conditions of working the machine have been modified so as to preserve the same mean numerical indications for the strength of the current, I, and the difference of potential, E, at the terminals of the apparatus to be measured.

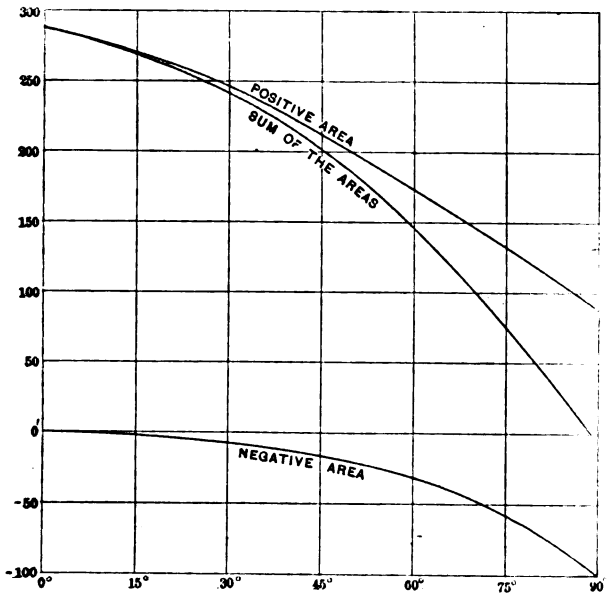

DIAGRAM OF ELECTRICAL POWER IN TERMS OF THE DIFFERENCE.

Fig. 5

In the three cases under consideration we see that the curve representing the power has two negative portions, which involve not an expenditure but a restitution of energy stored up a moment before in the reactions from induction.[2]

The positive area representing the work expended diminishes, whilst the negative area representing the work restored increases. This action, hardly appreciable with a difference of 30 degrees becomes pronounced with one of 60 degrees. At the theoretical limit with a difference of 90 degrees, figure 4, the two areas, positive and negative, are exactly equal, and the total work expended during the period is equal to zero, although the indications of the voltmeter and the electro-dynamometer remain constant.

Figure 5 sums up these results. The values of the difference are carried out in abscissæ, and the ordinates show the respective values of the positive work, the negative work and the algebraic sum of the two for a complete period.

This figure shows the great importance of this difference from the point of view of the difference between the electrical power really expended and that obtained from the product of the indications of the instruments of measurement.

For a difference of only 30 degrees the difference between the work really expended during a period and that deduced from the indications of the measuring apparatus would exceed 15 per cent.

Thus there remains much to be said about the power and the rendering of transformers, and, in general, about all apparatus supplied by periodical currents.

2. The effects thus produced may be compared, by analogy, to those of a flywheel mounted on a machine, the speed of which is irregular. The successive storages and restitutions of energy weaken the variations without involving any loss.

DYNAMIC ELECTRICITY.

BY CARL HERING.

(Continued from page 453, vol v.)

CHAPTER V.

ARMATURES.—(*Concluded.*)

CYLINDER armatures differ from the Gramme principally in the following respects. Their advantages over the latter are: for the same magnetism in the field the volume of the armature, and, therefore, also the size of the dependent parts of the rest of the machine, is smaller, owing to the lost air space in the inside of the Gramme ring; the proportion of the wire on the armature which is active, is greater, that is, for the same field, electromotive force, current, and inductor velocity, the amount of wire required on the armature is less; for the same capacity of armature, the internal resistance is smaller; when thick wire is used for the windings, it is more easily handled than in the Gramme; it is easier to fasten the core rigidly to the shaft, without the loss of valuable wire space around the core; they are more easily centered or balanced accurately for high speeds; the core, if made of sheet metal, is less expensive, as there is less waste; an unbalanced field, that is, one in which leakage or other causes make one pole stronger than the other, will affect it less than it would a Gramme ring.

The disadvantages are: it is more difficult to insulate the wires for high potentials, as two neighboring wires may have the whole difference of potential of the machine in them; a high inductor velocity is not so easily obtained without great increase of weight of armature, as its weight increases with the square of the diameter, while in the Gramme it increases merely as the diameter; if one coil burns out it will often necessitate the unwinding of several others, or even of all the others, as the injured one is frequently among the first or inside coils; it is almost impossible to have all the coils symmetrically situated and of the same length; for the same cross-section of armature core, it presents less external surface for the induction wires; it is more complicated to wind properly, and therefore requires a more skilled mechanic.

In designing cylinder armatures the following points are the most important, besides those already given. The greater the length as compared to the diameter the greater will be the proportion of active wire. On the other hand, the greater the diameter the higher will be the inductor velocity, which it is desirable to make as great as practicable. Both diameter and length should therefore be made as great as practicable; but as a practical limit is soon reached, it is necessary to determine by trial calculations for each special case, which of the two advantages has the greater weight. For high potential machines in which a slightly greater amount of dead resistance is not very objectionable, the diameter might be increased, while for low potential, quantity machines, the amount of dead resistance is of more importance, and therefore it might be better to increase the length of the core. As other considerations may however have greater weight in special cases, no general rule can be given.

The coils should all have as nearly as possible the same length and resistance, and should all be symmetrically situated with respect to the field and to their mean

Digitized by Google

distance from the centre of the shaft. The difficulties of accomplishing this is comparatively great, and it is therefore of the utmost importance to guard against irregularities of winding, for, as stated before, if the electromotive force induced in one half of the armature is greater than that in the other, even if only a small amount, a current will circulate, on open circuit, in the armature wire itself, which by Ohm's law is equal to this difference of electromotive force divided by the resistance of the wire, and as the latter may be very small, this wasted current may be quite great. On the other hand, if the inductions in the two halves are exactly equal and the resistances unequal, the differences of potential at the ends of the two halves (that is, the total electromotive forces, less that absorbed by the armature wire itself) will be unequal when the machine is running with a load, and there will be irregularities or pulsations in the current which may increase the sparking.

A coil should not be too wide, measured along the periphery of the armature, in order that the coil which is short circuited by a brush may be entirely in the neutral part of the field. The real neutral field is always considerably smaller than the distance between the pole piece projections. The coils should, for the same reason, be wound so that the two sides are as nearly as possible diametrically opposite to each other, though they need not be exactly opposite.

As the wires have to cross over one another at the ends of the armature, they occupy considerable space there, and make what is termed the "heads." It is evidently well to make these as small as possible, for several reasons; it shortens the shaft and the distance between the bearings thus decreasing the width of the machine; it shortens the bearing braces or supports and reduces the tendency to vibration as the shaft is thereby stiffened; it makes the length or resistance of the different coils more nearly equal, as the lengths gradually increase from the lowest, or first coil, to the last, and with large heads this increase is evidently considerable; a small head is more likely to be flat, therefore diminishing the tendency of the wire to slip off and loosen the coil; it will facilitate making the windings compact and solid to have a small head. In order to reduce this head, the number of windings should be as small as practicable; the number of crossings should be as few as possible, and the turns of one coil should therefore be parallel and not cross over one another; the wires of the head should be bent around so as not to bring several crossings over each other, that is, the crossings should be distributed over the head so as to keep it as flat as possible. When wires at the head are unavoidably in such a position as to be likely to slip, they should be tied with strong twine or tape, in order to hold them securely in their places. All wires crossing each other should be particularly well insulated with tape, shellaced muslin, fibre, or dense shellaced cardboard which is not likely to break.

The general principle of the cylinder winding is as follows. If, as in figure 16, a cylinder be supported on its axis, and while turning slowly, a wire be wound over it lengthwise, it will, after having made one complete revolution, be wound with the simplest form of a cylinder winding. To complete it, the end of the wire must be connected with the beginning to make it an endless wire, and the beginning of each turn, or number of turns forming a coil, must have a branch wire attached to it for connecting it to the commutator, as shown by the bold lines.

In continuing the winding shown in this figure, it will be found that after a few more turns the armature will be completely covered with the wire, while the winding has been continued for only one-half of a revolution of the cylinder. Furthermore, the commutator branch connections will be found to be along only half the circumference, while the beginning and end do not meet and cross, but are parallel and in the same direction, so that they cannot be joined properly. This is often misleading and confusing to any one winding a cylinder armature for the first time, as it gives the impression that there is some mistake. It will be easily understood if we remember that the winding must be continued for one complete revolution of the cylinder, and as it is entirely covered after half a revolution, it follows that in the second half revolution the wire will have to be wound over that already on the cylinder, thus making two layers over the whole surface.

This simple form of cylinder winding has the objection that the coils of the second half are longer and larger, having a greater mean radius and, therefore, a greater

Fig. 16

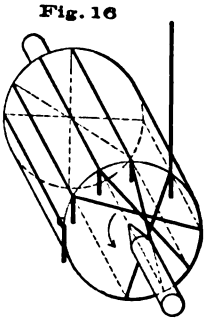

Fig. 17

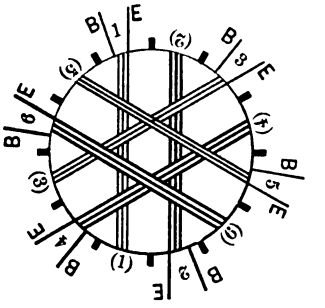

velocity, as they are wound over the others. This, as stated before, is a fault which should be avoided, if possible. It can be overcome to a great extent by dividing the surface of the armature into the proper number of sections, as shown in figure 17, and winding at first only in every alternate section, until half of the whole number of coils are wound, as shown in light lines, and then continuing the winding of the rest of the coils in the remaining alternate sections, as shown by the dark lines. All the coils will then be symmetrically situated, will have the same mean radius, and more nearly the same length. This method will answer very well when there are numerous turns in each coil, or in general when the width of the cross-section of a coil is greater than its depth, as shown in figure 18, in which the dark and light sections represent the neighboring coils which belong to diametrically opposite commutator bars, as shown in figure 17. This proportion of the sides of the cross-section will generally be found to exist when the number of coils or commutator bars is small.

In the better class of machines this is however not generally the case, as for instance, when there are two turns per coil, for then the depth is greater than the width, as shown in figure 19, and there may be difficulty in keeping the coils from collapsing while they are being wound. The method shown in figure 20, is often resorted to in such cases, but it is not to be recommended except when there are very many coils or commutator bars, as they have different mean radii from the axis. The difficulties mentioned have all been overcome by the ingenious method

Fig. 18 Fig. 19 Fig. 20 Fig. 21

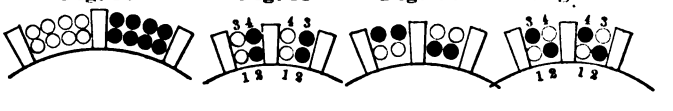

devised by Weston, and shown in figure 21, in which each coil is split into two equal parts, which lie alternately over and under the corresponding parts of the other coil belonging to the diametrically opposite commutator bar. In this method the turns are wound in the order as indicated by the numbers, either as in the first section or as in the second, the latter being less confusing while winding and the former simpler to the experienced winder. The advantages of the Weston system over the others increases with the number of turns per coil, and decreases with an increase in the number of coils. In the method in figure 19, the order of the winding may be either as shown by the numbers in

Digitized by Google

the first section, or by those in the second; the former is less confusing, while the latter is simpler.

Referring to figure 22, which shows an end view of the unwound armature with eight sections, each for two coils belonging to opposite commutator bars, if we start at the first upper commutator bar, and wind into the first section *a*, we may return to the face in any one of the opposite half-sections *b*, *c*, *d*, *e*, *f*, thence to the next bar and the next but one half-section as shown. By returning in the diametrically opposite part *d* it will be the old Siemens winding, which, as will be seen by completing the winding, is slightly irregular.[1] By returning in *e*, or *c*, it will be the Froehlich or Breguet, which are practically identical; both

Fig. 22

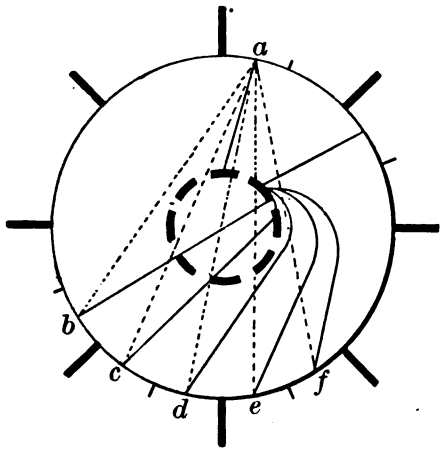

are quite regular. By returning in *b*, or *f*, the winding becomes very irregular and should not be used. If the number of coils is odd, the Froehlich and the Breguet systems merge into one, that is, the half-sections *e* and *c* become one and the same, being then in the position of *d*, diametrically opposite to *a*. This is known as the Edison system. The Weston system is the old Siemens improved by splitting the coils as described. The writer's system is this same principle applied to the Froehlich, and is, therefore, quite regular and symmetrical. The chief advantage of the Froehlich over the Siemens, besides its regularity, is, that there are only half as many crossings of the coils on the ends, thus making smaller heads.

Fig. 23

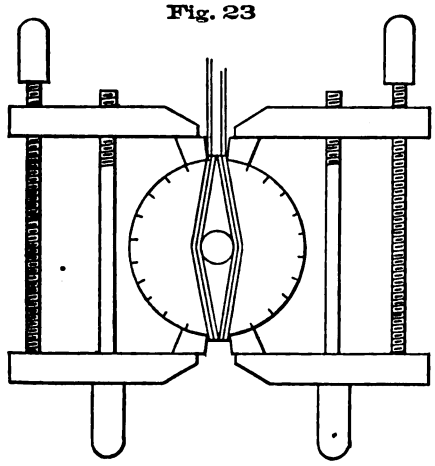

When iron lugs or projections are used between the coils, the winding becomes less difficult. In that case each layer in one section (which may embrace from one to five or six coils) should be completed before the next layer is wound, thus frequently necessitating a number of coils being wound at the same time; or, if this is confusing, a pair of wooden blanks should be made of exactly the width of the vacant part of one section, and be fastened there until the coil is completed and bound with tape.

When there are no lugs or projections of the core, the surface of the armature should be carefully spaced off into the required number of sections. It will then be found convenient, if not essential, to make wooden blanks of exactly the width and shape of the section of a coil, and clamp them as shown in figure 23, leaving a trough of the exact width of one coil. In this case, it is advisable to wind first every alternate section and bind the finished coils with tape, in order to leave vacant spaces for inserting these wooden guiding blanks. When the armature is half wound it will present the appearance of a cogwheel, with a trough between every two sections; these troughs being of exactly the width of a coil, are then readily wound with the remaining number of coils.

In winding the simple form shown in figure 17, in which each coil occupies the whole depth, proceed as follows: Suspend the armature core with its shaft on two high lathe centres, or on two similar centres between two strong posts, and jam it so tightly that it requires some force to revolve it. Select from figure 22 the method which is to be used; divide the armature surface into the required number of sections and mark on it, with the same number or letter, the two opposite sections which are to contain the first coil; similarly for all the others as in figure 17. Then, if there are partitions between each of the coils, as in figure 17 or 18, start at the upper section No. 1, and wind one coil, connecting its end temporarily with its beginning, and marking them, if desired, B and E. Then turn the armature around half a revolution, and starting in the same way wind the neighboring coil No. 2, figure 17, precisely similarly, connecting its ends together and marking them as before. Then turn the armature again for half a revolution and wind No. 3, and proceed thus, turning the armature one-half a revolution after each coil is completed. When it is completed, there will be a regular series of beginnings and ends of coils along the periphery of the armature, and they will all be in their proper relative positions. Untie the ends and connect the one marked E (end) of any one coil with the *next* one marked B (which will be in the next but one section) and with one commutator bar; the one marked E of this coil connect with the next B, and so on. By winding it as described it will be found to be almost impossible to make a mistake in the connections or in the proper location of the coils belonging to different sides of the commutator.

Another method is to wind first, sections 1, 3, 5, etc., figure 17, *without* turning the armature through half a revolution each time; then winding the even numbers, beginning at the point marked 2. But this is not so good, as the distribution of the unequal resistances of the separate unequally long coils is not so well balanced as in the first method. When the heads are small this difference will be less.

In winding the coils as in figure 19, two coils should be wound at the same time. Cut two wires to the proper length, call one the light wire and the other the dark. Start with one turn of the light wire (marked 1), fasten it, turn the armature through half a revolution and start the first turn of the dark wire (marked 2); turn the armature again and wind the turn No. 3 with the light wire which completes that coil; turn again and wind the turn No. 4 with the dark wire, which completes that coil. If the order given in the second section is to be used, the only difference is, that the armature is not turned between windings 2 and 3, which are taken with the same wire; neither is it turned in that case, between winding 4 of that section and 1 of the next. In the first method it must be turned between every two windings whether they be both in one section or in two neighboring sections.

If there are no lugs, and the appliances in figure 23 are used, in which case every alternate section should be

1. A detailed discussion of these forms of windings will be found in the ELECTRICIAN AND ELECTRICAL ENGINEER, March 1886, p. 84.

Digitized by Google

wound first, it is evident that if the winding in figure 18 is used, the armature should *not* be turned after completing a coil, as all will then be "light" coils until half of the coils are completed; in the winding shown in figure 19, however, in which each section is a complete set of two coils, proceed just as if there were no alternate section omitted.

If the Siemens winding, or any of its modifications are selected, it must be remembered that there is a slight irregularity just after completing the winding of half the number of coils. If this is not noticed it may result in wrong connections or in the unwinding of some coils, or in objectionable cross connections. In the Froehlich winding it is necessary to guard against winding into the wrong sections, as they are not diametrically opposite. In all cases errors are easily avoided by making a correct drawing first, numbering the sections and transferring these numbers to the armature core.

If by accident a coil has been wound in the wrong direction, provided its location is right, there is no necessity to unwind it, as it will answer just as well to connect it as if the beginning were the end, and the end the beginning. This applies to Gramme armatures also.

To examine an armature for wrong connections of the beginnings and ends of coils, which should always be done, place the armature north and south, put a small compass needle off to one side of it, about on a level with the axis, and test each coil as it comes into the vertical plane, with a tolerably strong current, by touching the two upper commutator bars, or the two upper connections. The compass should always deflect in the same direction. If it changes its direction of deflection, reverse the connections of that coil. It is not necessary to disconnect the commutator for this test, if the current is strong enough.

UNIPOLAR ARMATURES.

The term unipolar as applied to machines, has not reference to the polarity of the magnetic poles, as lines of force always have direction, and therefore two poles. It has reference, we presume, to the polarity of the armature which in such machines is always in one and the same direction, not reversed twice in every revolution, as in ordinary machines. The advantage thereby gained is that the currents will always be in the same direction in the armature coils, and it is therefore not necessary to have a commutator to cut out and reverse the connections of a coil just as it passes out of one field into the other, that is, just as the induced current in it will be reversed, as in ordinary machines. All sparking is therefore avoided, as the circuit is never opened or altered in the machine itself. All the evil effects of self-induction are also avoided, as there is no continued starting, stopping, and reversing of current in the armature coils. The current from such machines is precisely like a battery current, free from the pulsations always accompanying ordinary machine currents. A telephone connected to a fine wire coil, which forms the most sensitive detector of pulsations in currents, fails to detect the slightest variations.

Strange to say, the unipolar machine in the form of Faraday's disc, was, we believe, one of the first electric machines for currents ever invented; yet it has not until quite recently been made efficient to generate a current of more than a very low potential.

The difficulty encountered in the old forms of unipolar machines was that the lines of force of the field could be cut only once by the inductor or armature, and that to obtain a potential greater than a volt or two, it was necessary either to increase the speed, intensity of field and size of armature to an impracticable degree, or else to couple a large number of machines in series. In the ordinary bipolar machines, the inductor is in the form of a coil, and therefore cuts the same field a great number of times in one revolution, generally over 100 times, thus making the potential over 100 times that obtainable from a unipolar machine with the same field and inductor velocity.

Siemens improved the unipolar machine, by making the armature a tube with a cylindrical pole inside and a hollow pole outside having the opposite polarity. The lines of force passing from one to the other are cut by the revolving tube, thereby generating a current in one direction in the tube, which was collected at the two ends. In this machine the pole areas were quite large, but it is evident that this does not increase the magnetism more than a very little, unless the magnets themselves are increased also. With such a machine about two volts were generated in a tube several feet long. The current, which is limited only by the resistance opposed to the two volts, was naturally very great, being, we believe, several hundred amperes; the armature resistance is, of course, very small, the greater part being in the collecting brushes.

Forbes' improvement consisted in making an economical field of very great intensity and rotating a disc between the poles. Two such discs in two independent fields constituted a machine. The discs were of iron to increase the magnetism. The polarity of the two fields was such that the current was from the periphery of one disc to its centre, and *vice versa* in the other disc, in order to enable them to be connected in series by the shaft. The current was collected at the periphery of the two discs by numerous brushes. With two 10-inch discs this machine gave at 3,000 revolutions, about 5.5 volts on open circuit, and about 2.5 volts when giving over 3,000 amperes. If the internal resistance had been lower this fall of potential would not have been so great.

The difficulty in unipolar machines is to connect several discs, bars, or wires of one armature, in series with each other, that is, to make the same inductor cut the same field a number of times. In England, France, and Germany, numerous patents have been granted for such machines in which this difficulty was supposed to have been overcome by connecting the end of one of the bars or wires of the armature, permanently to the beginning of the next by a wire, thus connecting them in series. This, however, will evidently not generate any useful electromotive force, as this connecting wire must in all cases in which the connection is permanent, also cut lines of force, and exactly the same number which the inductors cut, but unfortunately for the inventors this induction must necessarily be in the opposite direction, thus completely neutralizing the other electromotive force induced. It has been suggested to make this connecting wire pass through a weaker field, thus allowing the difference of the two opposing electromotive forces to appear at the brushes. This is also inoperative because wherever the same lines of force make a less dense field, it must be larger in area, that is, it has the same number of lines of force. It has been suggested to shield these wires by an iron tube, but as this tube also cuts lines of force, they must also pass through its centre, that is, through the wire.

A machine was devised consisting of a Gramme ring without a commutator, the wire being cut in one place and led to two collecting rings. One pole completely encircled the outside of the ring, while the other, a revolving pole, was permanently connected to the iron of the ring by arms extending in between the coils. The ring was then rotated. It was supposed that the lines of force would pass out of the core between the wires, and thus would not be cut in the reverse direction by the same wire. But as might be supposed the lines of force did cut the wire in two opposite directions. In a small model constructed some years ago by the writer, not the slightest current could be detected even by a sensitive galvanometer.

Faraday's suggestion was to revolve two discs in the same field, in opposite directions, and then connect the two peripheries together by sliding contacts. The two electromotive forces will then be in the opposite direction in the two discs, but in the same direction with reference to two

Digitized by Google

collecting brushes at the centres of the discs. This will overcome the difficulty, but for more than two discs it becomes impracticable.

Within the last few years a number of unipolar machines have been invented, in which any number of armature wires or bars, may be connected in series with each other, that is, the same field may be used a number of times by repeated inductions in the same circuit. The principle is that the current is led off at the end of one inductor by a sliding contact and by a wire which is fixed with regard to the field, and therefore does not cut lines of force ; this wire is connected to the beginning of the next inductor by a sliding contact, and so on, connecting them all in series. By this means any desired electromotive force may be induced, while the current may be very great owing to the large and short inductors which may be used.

ALTERNATING CURRENT ARMATURES.

In the general type of alternating current machines the armature consists of a series of coils or turns of wire in one plane, generally placed in a circle at the circumference of a disc which is rotated. On both sides of these coils are a series of fixed field magnets with their opposite poles toward each other thus making a large number of independent fields through which the coils of the armature move when the disc is revolved. The field magnets being so connected that the polarity of each field is in the reverse direction to that preceding, the currents in the armature will be reversed continually as the coils pass through the successive fields. The armature coils are permanently connected with each other, the two terminals of the whole series being connected to two insulated rings on the shaft, on each of which a brush rests for collecting and leading off the current. The armature coils may be with or without iron cores ; in the former case, the induction will be much greater, but the iron heats so much that it is usually omitted. All iron cores, even if carefully laminated, will heat if encircled by an alternating current.

Such an armature possesses the great advantage that the coils may be connected in multiple arc, in series, or in any combination of groups, thus permitting the same machine to be readily altered to give a low tension and large current, a high tension and small current, or any intermediate grades that can be obtained by possible groupings of the coils.

The other, and perhaps chief, advantage is that the current is not commutated, and that therefore no commutator is required, thus avoiding all sparking, wearing off of brushes and commutators. No setting of brushes is required, as there is no neutral line to which they must be set.

A curious feature of some alternating current machines, and perhaps of all of them, is that they require more power when running on open circuit than when working with their normal load, and that consequently the machines will get very hot on open circuit. On the other hand when they are short circuited they run light, that is, require very little power to turn them. If an armature coil is to be cut out it should be short circuited and not left open as in constant current machines. The explanation of this is, probably, that the counter induction in the coil is so great when short circuited that it is almost equal to the initial induction, and that, therefore, only the difference between the two will act to generate a small current in the coil.

In the large Gordon alternating current machine the position of the field magnets and the armature are reversed. The field magnets are on the circumference of a large flywheel, eight feet in diameter, and are made to move past the armature coils which are fixed to the frame on both sides of the magnets. The great advantage of this is, that the armature coils may be disconnected, short circuited, or grouped in any desired combinations while the machine is running. The coils are generally connected in two groups giving two currents which can be used independently of one another. Regulation may be effected either by varying the field current or by short circuiting some of the armature coils.

In general, alternating current machines must have a separate exciting machine for the field magnets, as these require a constant current ; this is, of course, a great objection to their use. In some, however, the current from a few of the coils in the armature, is commutated, so that it becomes a constant current which may then be used for the field.

The great objection to alternating currents, is the self-induction of solenoids and particularly of magnets. For this reason any shunt solenoids or magnets used in regulators or cut-outs, as in arc lamps, must be made very large in order to have the same power or pull. Any iron used in connection with them must be limited to a small quantity and must be well laminated, or it will heat very much. A core for such a solenoid may be made of a roll of ferrotype iron. The counter electromotive force in a solenoid for alternating currents is not a constant quantity like the resistance, but depends also on the number of alternations, that is, on the speed, and on the current ; it will, therefore, vary under any but the perfectly normal conditions, and for this reason, it cannot be depended upon in automatic regulators, meters, and in most measuring instruments, except when coils with very few turns, or in general, series coils, are used, as distinguished from fine wire or shunt coils. Such currents may be measured with an electro-dynamometer, and potentials with some voltmeter without coils, such as the Cardew, which depends on the expansion of a wire heated by the current.

Motors may be run with alternating currents, but it is not advisable nor economical to do so.

(*To be continued.*)

WHAT IS ELECTRICITY ?—A SUGGESTION.

BY FRANK M. MILLER.

In the autumn of 1885, a gentleman of this city, called my attention to a chemical compound which he thought possessed characteristics useful for electrical purposes. To discover its salient qualities an investigation was first directed to its specific resistance. With the apparatus at our disposal it was found that its resistance was phenomenally high ; in fact the apparatus could not measure it, and it remained unknown as it does to this day. Of course, current will pass through the compound and the galvanometer needle will show a slight deflection, but to use the language of a well-known electrician, who also tested it, "it is the poorest known conductor."

This discovery was both novel and suggestive, and the compound was looked upon as something remarkable ; but with this reference that subject will be dismissed, and the line of thought and research that was suggested by the phenomenon will be set forth.

Knowing that all matter is dominated by law, it was logically concluded that this phenomenon was the expression of a law that, so far as the authorities go, was and is unexplained ; therefore, we were thrown upon our own resources for an explanation. As my friend knew exactly what the elemental substances were of which the compound was formed, and taking each in turn to solve the problem only to find that that was not the agent, he at last came to the conclusion that the hydrogenous richness of the compound was unmistakeably the agent, and he at once declared that the reason for the high resistance was, that the compound contained a large volume of hydrogen, and that hydrogen was and is the true electrical resistant.

Succeeding this declaration, in examining a treatise upon chemistry, I noticed this remarkable fact, that in a list of hydro-carbons those having the largest volume of hydrogen were of the highest electrical resistance, or in other

Digitized by Google

words, that the electrical resistance was proportional to the volume of hydrogen. This was conclusive proof to my mind, and the facts are indisputable and patent to all observers, while any chemical treatise upon the subject substantiates the hypothesis, and the hydro-carbons themselves, with galvanometric tests of the same prove it; for as the characteristics of carbon are well known, the hydrogen alone remains to explain the fact, and its varying volumes and proportional resistances claim acquiescence to the hypothesis.

The remark will be made that this may be true of chemical compounds, but it does not explain the phenomenon in its relation to the metals. This can be answered so soon as it is known what the metals really are. To say that they are undecomposable substances, or elements, expresses no fact upon which to base a proposition or formulate a denial. The phenomena of occlusion or the absorption of gases by highly heated metals give a partial answer and seems to show that the electrical resistance of matter is dependent upon molecular structure. But a step further may be made upon the assumption that the so-called sixty odd elements may be—and surely no one would hazard a positive "no" to this hypothesis—but compounds that are combinations of a few primary elements. This has been suggested long since, and if true, it is certain that the unit element would be found as a primordial, and therefore upon this hypothesis, those metals of highest electrical resistance would be found to contain large volumes of hydrogen, and those of greatest conductivity, to contain elemental substances for which hydrogen has greatest affinity; but until there is positive knowledge in this branch of metallurgy, the question remains an open one; but with what is known, the hypothesis may be made that hydrogen is the true electrical resistant, and that instead of molecular structure dominating the electrical resistance of matter, it is probably dependent upon the volume of hydrogen which the matter contains.

Electrical resistance thus defined is a question of chemical reaction. This at once broadened the research and led on to an investigation of the force which overcomes the resistant, or to electricity itself; and having made satisfactory progress in the solution of that problem, I will explain the result; but first I would remark that my friend, A. de Figanière, gave this part of the work to me, while he carried the work on into the domain of magnetism and crystallization which naturally followed the discovery of electricity.

So far as I know, the question: "What is electricity?" has been met with only intangible answers and vague surmises, or it has been relegated to the category of those other potent but unknown forces, heat, light, and motion. That it exists is self-evident; that it is *some* thing, is a sequence of its existence.

To approach the enigma let us take the voltaic cell, where by chemical decomposition we get the mysterious and evanescent thing called electricity.

Take the simplest form of voltaic cell, that of a piece of zinc and a plate of copper immersed in water, and upon joining the two metals with a length of wire an electric current is found flowing therein. Here are known things producing the unknown thing.

Allowing the cell to remain thus, we notice an accumulation of gases upon the surfaces of the metals, oxygen upon the zinc, hydrogen upon the copper. We further notice that by the addition of sulphuric acid to the water, an immediate and continuous decomposition of the zinc, a larger volume of hydrogen upon the copper plate, and more current. As the copper remains constant in its characteristics and volume, the decomposition of the zinc and the increase in the volume of hydrogen are the only features in the process, and they are both prominent and important, for herein is a repetition of a laboratory method generally used by chemists to secure a store of hydrogen. It is, therefore, evident, that the presence of the hydrogen upon the copper plate is the result of the decomposition of the zinc; thus that factor can be eliminated from the research. The oxygen of the water that is decomposed is found at the zinc while the hydrogen of the same but augments the store already found at the copper; thus the water is accounted for. Nothing now separates us from the current but the copper plate upon the surface of which free hydrogen is found, and flowing from it the current. If the copper (or piece of carbon if that is used) changed its characteristics in the process, the problem might be more difficult; as it does not, but remains constant, it, too, can be eliminated from the research. There is now left but the hydrogen upon the one side of the plate, and the current emanating from the other, and I reason that the decomposition of the zinc produced the hydrogen, which by the law of chemical affinity, flowed to the substance in the copper for which it has affinity (or to the element, as some may prefer to say), and is taken therefrom as an electric current, or that the hydrogen generated in the cell flows outside of it still as hydrogen, or in other words, that hydrogen is the electric current, and that it is evolved by and under the laws of chemical action and affinity.

I base this belief upon the hypothesis that if the factors zinc and sulphuric acid produce in the laboratory hydrogen, there is no reason why the electrician should not get the same result when he uses the *same* factors in the *same* combination; and that there is no reason why the electrician should not individualize the result of his process by the same nomenclature as that which the chemist uses. At present it is recognized that all chemical action first produces a current of electricity; but for a peculiar corroboration of the assertion above made I refer the reader to Attfield's Chemistry, a note on page 97, where specifying the results of this chemical reaction, he thinks it possible to construct an organization using these factors to give (at the same instant) the two manifestations of the same force. But for proof of the hypothesis I go to the oldest manifestation of electricity, *i. e.*, the thunder storm, wherein the elements best known generate that force. By excessive friction the watery vapor of the clouds is decomposed and the hydrogen is liberated, to instantly recombine with the oxygen to form water, with the consequent explosion and light and immediate downpour of rain. (It has passed into a common saying that a lightning flash is immediatly followed by heavier rain.) This phenomenon has remained unnoticed for ages, yet it is but another laboratory experiment on a grand scale, and in this instance, at least, it cannot be denied that hydrogen is electricity, and for remarkable corroborative testimony I refer to Sir William Armstrong's hydro-electric apparatus, where the friction of globules of water against wood is made use of to produce electricity.

Another natural phenomenon corroborates the hypothesis. It is a law that "electricity, flowing through a conductor, generates heat;" simply because hydrogen being a factor of combustion meets the other factors of combustion as it flows through the conductor, the result being the consequent heat; and if the conductor is cut in two, and these ends alternately open and close the circuit, a modified explosion immediately follows as the *hydrogen* unites with the element having affinity for it. Another natural phenomenon bears testimony to the truth of the hypothesis. In the effect which the aurora borealis has upon the magnetic needle and telegraphic instruments, it has been supposed that that was electricity, *per se;* but the nearest approach to discovery of its nature has been with the spectrum, which shows a green light exactly corresponding to the spectrum of the zodiacal light and the tails of comets. This is all that is known of these phenomena, and it will be asked what relation has this to hydrogen, the spectrum of which gives a red light. The answer to which is, that it is true the spectrum of hydrogen

Digitized by Google

gives the red light under certain conditions, but it is equally true that under other conditions it gives the identical green light of the aurora, and that when it gives the green light it is under low pressure, as also the aurora must undoubtedly be. I refer the reader to Wüllner's series of experiments with the spectrum of hydrogen, wherein he shows that under a pressure of less than one millimetre the spectrum was green.

This experiment shows that at a very low atmospheric pressure hydrogen is identical with the aurora, and at such low pressure it is certain that the expansiveness of the hydrogen has sundered the cohesion of the molecules, and that the atoms of the molecules exist separately and distinct from one another, or in a nascent state; and this leads to the hypothesis that in a *nascent state alone* hydrogen is electricity; as soon as it becomes *free*, or the atoms recombine to form molecules, it changes its condition from current to that of resistant. This is indicated in the voltaic cell, wherein, as soon as the positive pole "element" becomes surcharged with the nascent hydrogen, its condition changes and it is found upon the surface of the element as free hydrogen or as resistant too great for the nascent hydrogen or current being evolved within the cell to overcome, then a reverse current begins within the cell, carrying with it particles of the "solution." This phenomenon is called polarization; it can only take place while the positive pole "element" is surcharged with free hydrogen.

If, then, the lightning flash, with its electrical phenomena is hydrogen, and the aurora, with its electrical manifestation, give the same answer to the spectrum's analysis that hydrogen does, can we not say that these things, though called by different names, but having the same characteristics, and attended by the same phenomena, are one and the same thing, and that that thing is hydrogen?

Having thus given a few corroborative facts in proof of the hypothesis, I proceed to attempt defining the laws which govern the generation and action of an electric current, and I shall endeavor to conform the present nomenclature to represent what I conceive to be the true laws.

Strength of current or quantity of current, produced in the voltaic cell is proportional to the volume of hydrogen in the positive element, or to the amount of zinc consumed.

Intensity of current or electromotive force, is proportional to the chemical action in the decomposition of the positive element; the more excessive the action the more intense the current.

Potential, should express the condition which a point or body has in relation to the volume of nascent hydrogen it may possess in excess or defect to that possessed by another point or body. Potential is proportional to the volume of nascent hydrogen, the larger the volume the higher the potential.

Difference of potential, is a difference of chemical condition between two points or bodies, in respect (1) to the volume of hydrogen possessed by them, and (2) to the volume of elements in the one having affinity for elements in the other; and, according to the laws of chemical affinity, there is a constant effort of the hydrogen in the one point or body to seek the elements in the other for which it has affinity, hence this difference of potential ever varies.

Resistance of a body is directly proportional to the volume of hydrogen it contains.

Conductivity, the reverse of resistance, is inversely proportional to the volume of hydrogen a body contains, and directly proportional to the elements having affinity for hydrogen in the body or matter.

PHILADELPHIA, Pa.

ELECTRIC STREET CARS.[1]

BY T. C. MARTIN.

THE great question agitating street railway companies in this country at the present time is the use of some motive agency more economical and convenient than horses. It is no exaggeration to say that after about half a century of patient trial they have become profoundly dissatisfied with animal power and are ready to adopt any system that can establish its claim to their preference. Evidence of their feeling on the subject is seen in the fact that at the last convention of street railway men, the progress of electric motors was reported upon by a special committee whose optimistic statements were heard with pleasure. One of the most prominent members avowed that he regarded the promise of electricity as a motor with which to supersede horses as very encouraging. Another said: "All honor to those who are giving an hour or a dollar to the development of this important agent." A third thought it the duty of the convention to extend an earnest and cordial greeting to every man who was "trying to replace bad with good." These sentiments should, I think, encourage us, who with enthusiastic pride have seen the rapid increase in efficiency of the electric motor, and who, no matter what may be our predilection for particular systems, assert and know that—as a bottom and basic principle from which to start—electricity is more than equal to all the demands that may be made upon it in the special service of propelling street cars.

The struggle for supremacy in this field of occupation may fairly be said to have narrowed itself down to three competitors—the horse, the cable, and the electric motor. Steam used directly is, it seems to me, viewed with more and more disfavor as the years go by, and has within city limits come to be considered very much in the light of a nuisance. The lowest cost of operation per steam motor per day, in usual service, that I have seen quoted authoritatively is $8.50 to $7. But even if steam were cheap, there are grave objections on the score of noise, smell and dirt. The mere fact that steam locomotives have been in successful use 50 years, but are still denied employment on the streets, tells its own story as to public opinion. To some of us the banishment of steam even from the tracks of elevated roads seems a matter of but a few years. As for gas, soda, and compressed air motors, I am not aware that they offer any points of superiority over steam for the specific purpose under discussion.

Coming to horses, we find that in spite of their universal use and their faithful performance of duty, they inspire a discontent anything but complimentary, yet hardly to be wondered at. The statistics of horse cars are important and interesting, and deserve our attention as covering the sphere within which the electric motor will operate. There are, according to the latest returns available for this year, about 625 street railways of all kinds in the United States and Canada. Taking of these 408 horse roads giving full and trustworthy figures, I find that they run 17,331 cars and employ 85,888 horses. If at the same ratio we took all the horse roads, upward of 500, we should arrive at a result of not far short of 25,000 cars and 120,000 horses, a total that probably comes very near the actuality. Taking the other figures, which I have tested by three sources of information, it appears that all the horse-car lines are maintaining a proportion of at least five horses to each car. But that is inclusive, and making a reasonable allowance for the use of different cars for winter and summer, and for idle cars, as well as for "doubling up" in heavy snows, a result is shown of at least eight to ten horses per car. This is the proportion usually cited, and it is brought out on a special examination of the statistics for this city. Thus, the Broadway and Seventh avenue road has 121 cars and 1,350 horses, or not far short of 12 horses per car. The Central Park, North and East River road, with a total of 161 cars, has 1,223 horses, a broad average of 8 horses per car. The Eighth avenue road, with 112 cars, has 1,155 horses, or 10 per car. The Forty-second street and Grand street line has 50 cars and 485 horses, or 9 per car. The Sixth avenue line has 127 cars and 1,296 horses, or 10 per car. The New York and Harlem with 164 cars has 1,321

1. Read before the American Institute of Electrical Engineers, December 7, 1886.

Digitized by Google

horses, or 9 per car. The Third avenue road, returning a total of 360 cars, has to keep up a force of nearly 2,200 horses. The large number of horses required is also to be learned from the fact, stated by Mr. Augustine W. Wright, that those on the North Chicago line, which is a favorable sample, work daily only two hours and seventeen minutes. Or to put it in another way, the 6,158 street car horses of Boston travel each about 10 miles a day only, or two hours' service.

The costliness of horses may be arrived at in yet other ways by the use of comparative figures. Mr. T. C. Robbins, of Baltimore, a street car expert, gives the average cost of horse car per day at $6.50. I have had the same figures given me for Brooklyn and Philadelphia, while Mr. C. B. Holmes, of the Chicago Cable Railway, who has had great experience with horse service, says that the expense per car-mile by the cable system is 10 to 11 cents, as compared with 20 to 25 cents per mile when employing horses. On a daily run per car of 50 miles, that would be at least $12 per day with horse traction, and half as much for cable. Moreover, there are the great extent of valuable land required for huge stables and the heavy depreciation of stock. Few occupations are more exhausting to horses than street car traction, and the average railroad life of a horse is but from three to five years. In other words, out of 100,000 horses, at least 20,000 every year die or become useless for their work, and drag out the remainder of their existence in other occupations. "How are you getting along with those old horses I sold you," said the street railway president to Mr. Sexton, the undertaker. "Pretty well," was the reply. "I tried 'em first in the mourning coaches, but they were too slow for the ladies. Then I put 'em in the hearses, and I haven't heard any complaints from that quarter."

The cable has already made its way into use on a large number of street railways doing a heavy business, and is, it must frankly be admitted, a vast improvement on old methods. It has enabled those roads to handle a traffic that was utterly beyond their capacity before. It has accelerated speed, has lessened accidents, has given the streets a cleaner look, has, it would seem, cut down expense, and has certainly raised the value of property wherever put in. But I doubt seriously whether in view of the enormous first cost of the cable system and the excessive waste of power, it will make very rapid strides, especially when subjected to the rivalry of electric motors. At the recent street car convention, the new cable roads at Kansas City were presented for favorable notice, and as they were evidently considered good specimens, let us accept the figures. The Metropolitan road will cost $50,000 per mile of single track, and I observe that it is claimed with regard to the Philadelphia system that the track there could now be duplicated at about the same cost. The Kansas City cable company gives some interesting results of a test of its engines and machinery, from which I gather that with a total of 159.7 h. p., no less than 119.06 h. p. was required for the cable machinery, leaving only 40.64 h. p. for cars and passengers. In other words, just 25 per cent. was available for actual traffic. This waste will strike electricians familiar with the high efficiency of dynamos and their transmission of power as extraordinary. But it is confirmed by a statement from Mr. C. B. Holmes, of Chicago, who says that his cable railway required for ordinary operation, engines of 477 h. p.; that it took 389 h. p; to move the cable and machinery, and that 88 h. p., or only 18½ per cent., was used for the propulsion of the cars at nine miles an hour. Mr. W. W. Hanscom, in a careful review of the conditions applying to the cable lines of San Francisco, gives a total daily average percentage on the seven roads of 68 per cent. of power for moving the cable, and 32 per cent for the cars and passengers. Two miles of new double-track in San Francisco, fully equipped, have just cost $400,000.

I do not know that these figures call for comment, as those presented later on in regard to electricity will serve for purposes of comparison. But they may be supplemented by one or two observations. It is evident that there is an objectionable rigidity in the cable system and that it has narrow limits of applicability. A cable road, of whatever kind, needs a very large patronage. Mr. P. A. B. Widener, well known in connection with Philadelphia street railways, said last year: "To maintain a cable road you must have a certain amount of business in order to be self supporting. It costs as much to run the cable for half a dozen cars as for half a hundred. Small roads, or feeders to the main line, are run more cheaply by horses." It will be remembered that great trouble was experienced in Philadelphia in rendering the cable system there operative last year. The assertion is made by those who should know that 12 miles, costing between $40,000 and $50,000 a mile, required $250,000 in repairs and renovation inside the twelve months; but, as the *Ledger* put it philosophically at the time of the breakdowns: "It is claimed that the delays and other annoyances that have been experienced by the company have been slight in comparison with those met with in Chicago when the cable road there was in its infancy." We New Yorkers and Brooklynites are more familiar with the mishaps on the East River Bridge, and from the arguments made here and elsewhere against cable roads we have learned that the cables wear out quickly, besides being ceaselessly noisy and requiring a conduit that must have such a depth as to become an unhealthy drain or sewer.

We reach now, in the due course of our survey, the use of electricity as compared with horses or cables. You will, I believe, bear me out when I say that the confidence of electricians in the ability of electrical means to propel street cars is as strong as it could possibly be, and is, moreover, based on no small amount of work and experience. I might affirm that the general introduction of electric motors is now largely a question of coal bills. I might affirm that it has more and more resolved itself into a question of mechanics; and in both statements I should have your concurrence. I might broadly state that in Europe, where a large number of electric roads exist already, they are paying well and multiplying; and that such roads in this country had, some months ago, carried altogether over a million passengers, or a daily traffic of 3,000 passengers for a full running year, without any recorded injury to a single patron, while several new roads have of late gone into successful operation. But at the risk of covering much ground with which you are familiar I shall venture to give an outline of some of the methods by which electricity is applied to street-car service, as well as some of the data establishing its claim to superiority. I do not know of any point on which a fair comparison need be shirked; I do not know of any difficulty that can balk the infinite variety of our electric art, and as this society has never hitherto had the subject before it, I am encouraged to go a little into detail.

We have, in using electricity for street cars, the option of so many methods that the very flexibility of the application becomes a recommendation. We shall, perhaps, best spend our time in considering three or four of the leading methods, with incidental reference to the peculiarities of individual cases in each. I propose to take the third-rail system, the overhead system, the conduit system and the storage system, and, without any intention of invidious discrimination, to pick out, for the exemplification of each, some of the roads and cars that have been running or can be seen and tested.

Let us begin with the third-rail system. The Daft road at Baltimore, now in its second year, has been so often described that full details here are not necessary, but it furnishes some interesting figures. The cost of electric power there against horse-power at $6.50 per car has been $4 per car per day, with an increase for the year of 83,986 passengers. Mr. T. C. Robbins reported as follows to the

Digitized by Google

street car convention: "It was started on a purely commercial basis, as a purely commercial transaction, and has continued, and is now being extended, simply because it has proved its right to stay by the performance, which leaves little to be desired." The largest item in the expenses at Baltimore is coal at $3.50 a ton. Another third-rail road, the Highland at Detroit, on which there are none of the grades and curves that rendered the Baltimore road expensive as to fuel, is in very successful operation. Like the Baltimore road, it has a wheel for making contact, but, unlike it, has the third rail neatly sunken between planks. It runs out of the city for three miles. The car in use is the same as those on Broadway, this city. Mr. Frank Fisher, whose motor is used, informs me that on a recent Sunday, on a thirteen hour schedule, the road carried 5,500 passengers. The coal consumption was a little over 400 lbs. The coal—screenings—costs $1.25 a ton. The success has been so great as to lead to a development of matured plans for the increase of the service there and on a new local road to be begun in the spring.

You will agree with me, I think, that third-rail systems must be limited to a low electromotive force, and to suburban or rural districts. Even there they have a large opportunity.

Coming to the overhead conductor systems, the Van Depoele roads form an important group. These roads are now in operation at Detroit, Port Huron, Mich., Windsor, Can., Appleton, Wis., Montgomery, Ala., and Scranton, Pa. Mr. Van Depoele suspends his feeding conductor by side poles, or, as at Appleton, has double wires, corresponding to the track, but immediately above it at a height of 18 or 20 feet. The little Windsor road, two miles long, with two cars, started in June, 1885, has paid for itself. I may mention that when I went on it last August, one evening, I visited the generating station. It was deserted and in black darkness. I made the trip and then went back to the station. The darkness was blacker, and there still was no sign of attendance, but the 30 or 40 passengers each turn were none the wiser and none the worse. I don't approve such practice however. The Appleton road, with five cars, is the first in this country run by water power, depending, and with great success, upon a pair of turbines that will develop 100 h. p., and are now driving a 60 h. p. dynamo. The Montgomery road is notable as being a complete city system, including ten miles of track. The Scranton road that started last week has two features of special interest. One is that in a city of about 50,000 or 60,000 inhabitants the use of the overhead conductor is allowed. Another is that the line is operated from the electric light station. The road is 2½ miles long, with 12 grades, mostly over 6 per cent. There are already in use two heavy Pullman cars, running at a speed of from 4 to 15 miles an hour. The current is conveyed by a conductor $\frac{4}{10}$ of an inch in diameter, the rails forming the return. A traveler with rollers and a flexible cable passes the current to the motor, which, it is worthy of notice, stands upon the front platform in sight of the driver. The electric light station is well satisfied with only $9 a day for running the 60 h. p. generator, and it is evident, therefore, that an increase of rolling stock will involve very little increase in cost of power. Here is a hint by which electric light men nearly everywhere might profit.

In the overhead conductor category should be included Mr. Daft's new roads at Los Angeles, Cal., one 3½ miles long and the other 2½ miles. A peculiarity is the placing of the motor in the centre of the car, occupying the room of but two passengers, and leaving both platforms clear.

The overhead bare conductor systems are also restricted to currents of low electromotive force. But they, as well as the third-rail systems, do work it is impossible to perform remuneratively by cable, and which would often be beyond the range of horse or mule power on either philanthropic or business principles. Provided permission is obtainable for running the wires, the overhead conductor system seems cheapest, if not best, for cities up to at least 50,000 population. I believe a double overhead conductor system well built should cost from $1,500 to $2,000 per mile. The single conductor is, of course, much cheaper.

There are in the United States about 40 cities with population above 50,000. In almost every one of these it would be necessary to resort to the electric conduit system, third on our list, unless the storage system be tried, or a combination of the two. At the present time, the outlook for electric railways with conduited mains is very favorable.

The first exemplification of a conduit system in this country was given by the Bentley-Knight Electric Railway Company in 1885, at Cleveland. A working section of their line can now be seen at the Rhode Island Locomotive Works, and as it illustrates in a striking manner the principles involved, I will touch on a few of the leading points, now described for the first time. The conduit is made to resist the heaviest wear and strain of street traffic. The surface opening, or slot, is only $\frac{1}{8}$ of an inch wide, and the total width of metal at the street surface is but 3 inches. The conduit is kept clean by a broom of peculiar shape suspended from the car. This broom is said to have swept out in a single trip the accumulation from 12 hours constant snowing. At convenient points catch-pans with sewer connections receive the sweepings and effect drainage. The two main conductors consist of channel iron connected by expansion joints and lined with a continuous strip of copper of sufficient size to carry the current with but small loss of energy. These conductors are fastened to the side walls of the conduit on insulators of vulcanized wood dipped in white lead. The insulators are strongly set in sockets in the cast-iron supporting yokes. Neither the traffic rails nor the conduit structure form any part of the electrical circuit. To provide for switching, a movable tongue is pivoted at the point of branching, so as to rest on the top of the conduit and to be readily set to close either of the branch slots and direct the contact plow into the other. A corresponding conductor tongue within the conduit is moved at the same time. The contact plow for making connection consists of a flat frame hung from the car by transverse guides, on which it is free to slide the whole width of the car and extending thence down through the slot of the conduit. It is provided with a swivel joint, so as to adjust itself to all inequalities of road or conduit. This frame carries two flat steel insulated conductor cores, to the lower ends of which are attached by a spring hinge small contact shoes of chilled cast iron that slide along in contact with the two main conductors. At the upper ends are flexible connections leading to the motor. This plow can be inserted or withdrawn through the slot at will, the spring hinge allowing the contact shoes to straighten out into line with the conductor cores when the plow is pulled upward and the shoes strike the insulating lining with which the slot irons are provided. By no accident, therefore, can anything be left behind in the conduit to obstruct succeeding cars. The plow guides are hung on transverse axes, and are held in a vertical position by a spring catch that gives way when the plow meets an irresistible obstruction, and hence the plow is automatically thrown completely out of the conduit without injury, being also immediately replaceable. The contact shoes will stand weeks of wear, and cost next to nothing. The frame of the plow has wearing guards of hardened steel wherever it can touch the edge of the conduit slot, and these are also readily renewed. Two plows are used on each contact for the sake of absolute reliability, and to prevent flashing at the contact. The connection between the wheels and motor consists of a system of gear wheels and connecting rods, the gears being deadened so as to be quite noiseless. The company makes a completely equipped steel-framed truck, with motor, etc., upon which can be placed any car body. These have a wheel base of 6 feet, a standard gauge of 4 feet 8½ inches, and can be used on curves with a radius of 45 feet. A motor of the Gramme type is used under the car. For long

Digitized by Google

distances the motors are in series, with current constant; for short distances, the motors are put in multiple arc, and a new form of resistance is used.

Such are the main features of the system. Of its eminent practicability there should be no doubt. The question again is one of expense, and I therefore give transcripts furnished me by Mr. R. W. Blackwell, of actual estimates submitted quite recently and now under consideration. The first is for the equipment of existing street railways in the city of New York, 3 miles, 1,440 feet, double track, minimum headway 1½ minutes, average speed 7 miles per hour, running 24 hours per day, very heavy traffic, maximum grade 3 in 100.

CONSTRUCTION AND EQUIPMENT.

Conduit and conductors, 34,560 feet, at $3, $103,680; motor trucks, 37 at $1,200, $44,400; 50 h. p. dynamos, 12 at $2,500, $30,000; steam power plant complete, $27,750; foundation, $5,000; engineering, $3,000—$213,830.

ANNUAL EXPENSE.

Coal, 14 tons per day, at $3, $15,330; engineer and assistant, at $2.50 and $2 per day, $1,642.50; firemen, 3 at $1.50 per day, $1,642.50; machinists, 2 at $2 per day, $1,460; total running expenses, $20,075. To which should be added interest on construction cost ($213,830) at 6 per cent., $12,829.80; and also depreciation of plant at 3 per cent., $6,414.90; total expense and charges, $39,319.70.

The second is for a down-town cross-town road in the city of New York, greatest grade 1 in 12, double track: 12,660 feet conduit (extra heavy), at $4, $50,640; 20 motor trucks complete, at $1,200, $24,000; six 50 h. p. dynamos, at $2,500, $15,000; steam plant complete, $20,000; foundation, $2,000; engineering, $2,500—$114,140.

Of course, I do not present these figures as those upon which all authorities are agreed, but they have their value as being bids on actual work.

The conduit system of Mr. W. M. Schlesinger, in use for four months past by the Union Electric Company at Philadelphia, with a car running 9¼ miles an hour, has noticeable peculiarities. It consists practically of two conduits, the upper of heavy channel iron for connection, the lower of wood or cement for drainage. To insulate the conductors, an angle iron is riveted to the top flange of the channel iron in such a manner that one of its flanges, pointing downward parallel to the main side of the channel iron, forms one side of the slot. In the inverted trough thus formed, the copper bar conductors are fastened, the contact being on the under side. Against the conductors, pulling upward, rub or press springs, making a firm, close contact under control by means of a frame holding the springs. In Mr. Schlesinger's system, the motor is under the car between the axles, and geared to them by means of chains. The motors are intended to work in multiple arc.

There are other conduit systems, among which I might mention the Van Depoele used at Toronto, I believe, in 1884, at the exposition. But my object is not so much to describe all the systems as to bring up main features and relative costs. I will, therefore, pass on to point out that whereas in the cable system, with its costly conduits, the available power for the cars and passengers reaches only about 25 per cent., in the electric conduit system, requiring for generators, conduit and conductors, etc., but half the outlay necessary on a cable system, the net return of power, as you are well aware, reaches at the minimum from 50 to 60 per cent. Mr. G. W. Mansfield, who has had considerable experience with the Daft company, puts it as being at least 56 per cent. I note, too, that with the use of the Holroyd Smith conduit system, the Blackpool road, England, has reported earnings of $1,735 in a week, with a total expense account of $225, running 2,760 miles, and carrying 44,306 passengers.

A distinguishing feature of the conduit system is that it is the only one with which high potentials can be employed on the streets. With it, also the power stations can be placed near ample water supply or where rents are low, or can each be given a section of road to operate.

I approach the next and last system on our list, that of storage, with some degree of nervousness. In more than one quarter the man who comes out with a kind word for the secondary battery is set down as either a knave or a fool. I cannot see why he should be regarded as either, although he may perhaps be more than ordinarily sanguine and hopeful. I have myself ridden very comfortably in a street car propelled by storage batteries, so that I know the thing can be done, and I understand that storage is to be extensively used at an early date by the North Metropolitan Tramway Company in London. At Antwerp, in 1885, after six months' competition with four other cars using either steam or compressed air, the Julien electric storage car took the first prize, awarded by a jury of well-known experts. There were in all twenty-three points of comparison. The Julien car has since been tried in Hamburg, and another has been in operation on the Eighth avenue line in this city. Mr. Widener, of the Philadelphia cable line, has traveled on it and is to try it, being very favorably impressed. But, as he remarked publicly, "The question is as to the cost of maintenance of the cars and the furnishing of motive power." It will be admitted that there are advantages in having each car an independent unit, offsetting the disadvantage of carrying the dead weight of batteries; and that single cars on any road can be taken in hand for change, so that existing rolling stock can be progressively adapted to the new conditions. This involves a smaller initial outlay and gives opportunity to train the present force in its unfamiliar though simple duties. Now, regarding first cost—I have never seen any figures as to the expense of an equipment of a car with storage batteries. It has been said that two sets for an ordinary street car would cost about $1,500. That seems high. The Julien company states that the cost of the horses for a car more than covers the initial outlay of the change, and I believe the firm estimate is also made by the company of a total daily running expense of not to exceed $5 per car in cities on heavy traffic. As to life of the batteries, those in the Hamburg-Julien car have now been in daily use since April, and they show by test a return of more than 80 per cent. of the power with which they are charged. The car is running on regular daily service. In respect to American storage batteries, it may be mentioned that the Electrical Accumulator Company, whose officers have a standing in electrical circles, guarantees two years' life for its new battery and an 80 per cent. return of power. The criticism has been made that ordinarily 20 per cent. of the stored energy is retained on each emission, but obviously that is no loss, forming simply 20 per cent. of the succeeding charge.

Putting it broadly, the storage system, in spite of its various conversions of energy, has a superiority of at least 25 per cent. over cables. Some of you will put it far higher, but as I have said, in the absence of the data of prolonged work, I prefer to put it low.

I think we shall see a number of efforts shortly made in the direction of using secondary batteries for regular work on street cars, and the results will merit our most careful study. There are, moreover, some ingenious propositions for combining the conduit and storage systems, so as to enjoy the benefits of both. Mr. J. M. Pendleton has described a plan of his of this nature, and Mr. Elias Ries, of Baltimore, has also carefully elaborated such a system, in which storage plays an important part.

Here, then, illustrated in a variety of ways and by numerous examples, we have a comparison of electricity with other power for propelling street cars, and an idea is given, very imperfectly, of the wide range of choice that electricity itself offers as to methods and means. Much of what has been said has its direct and favorable bearing

Digitized by Google

on elevated railway traction, as well as on that for underground railways, but the time will not permit me to pursue the subject any further. Many points of discussion arise as to the connection of the car axles with the motor; the use of independent motor cars or of motors on the passenger cars; the types of motors and of conduits or conductors; the potential that is safe under certain conditions; the methods of regulating motor speed; the use of resistances; but all these and others I may leave to you, many of whom are doing practical and creditable work in this field, and who by thus "hitching your wagon to a star," have shown that street cars, if run by electricity, may yet be brought up to the most advanced notions of humanity, comfort, convenience and economy.

All that remains is to press onward and occupy the pre-empted territory that awaits us. As Emerson says: "Our duty is plainly not to throw ourselves across the track, not to block improvement, not to sit still till we are stone; but to watch the uprise of successive mornings and to conspire with the new works of new days." This sentiment may surely be appropriated by modern electricians, who every year put their skill to some severer test, and every year win fresh triumphs. In beginning this street railway work, we may count on a large and profitable travel for some time to come, through the mere novelty of the thing, but as the art improves it will more and more manifest its right to street railway propulsion on the strictest business principles, as well as on every other ground of merit.

DYNAMO-ELECTRIC MACHINERY.[1]

BY J. HOPKINSON, M. A., D. SC., F. R. S., AND E. H. HOPKINSON, M. A., D. SC.

Theoretical Construction of Characteristic Curve.

OMITTING the inductive effects of the current in the armature itself, all the properties of a dynamo machine are most conveniently deduced from a statement of the relation between the magnetic field and the magnetizing force required to produce that field, or, which comes to the same thing, but more frequently used in practice, the relation between the electromotive force of the machine at a stated speed and the current around the magnets. This relation given, it is easy to deduce what the result will be in all employments of the machine whether as a motor or to produce a current through resistance, through an electric arc, or in charging accumulators; also the result of varying the winding of the machine whether in the armature or magnets. The proper independent variable to choose for discussing the effect of a dynamo machine is the current around the magnets, and the primary relation it is necessary to know concerning the machine is the relation of the electromotive force of the armature to the magnet current. This primary relation may be expressed by a curve (Hopkinson, Mechan. Engin. Instit. Proc., 1879, pp. 246 *et seq.*, 1880, p. 266), now called the characteristic of the machine, and all consequences deduced therefrom graphically; or it may be expressed by stating the E. M. F. as an empirical function of the magnetizing current. Many such empirical formulæ have been proposed; as an instance we may mention that known as Froehlich's, according to whom, if c be the current in the magnets, E the resulting E. M. F., $E = \frac{a c}{1 + b e}$. For some machines this formula is said to express observed results fairly accurately, but in our experience it does not sufficiently approximate to a straight line in the part of the curve near the origin. The character of the error in Froehlich's formula is apparent by reference to sheet I. (plate 16), which gives a series of observations on a dynamo machine, and for comparison therewith a hyperbola, F, drawn as favorably as possible to accord with the observations.[2] Such empirical formulæ possess no advantage over the graphical method aided by algebraic processes, and tend to mask much that is of importance.

One purpose of the present investigation is to give an approximately complete construction of the characteristic curve of a dynamo of given form from the ordinary laws of electro-magnetism and the known properties of iron, and to compare the result of such construction with the actual characteristic of the machine. The laws of electro-magnetism needed are simply (Thomson, papers on "Electrostatics and Magnetism;" Maxwell, "Electricity and Magnetism," vol. 2, pp. 24, 26, and 143), (1) that the line integral of magnetic force around any closed curve, whether in iron, in air, or in both, is equal to $4 \pi n c$ where c is the current passing through the closed curve, and n is the number of times it passes through; (2) the solenoidal condition for magnetic induction, that is, if the lines of force or of induction be supposed drawn, then the induction through any tube of induction is the same for every section. Regarding the iron itself, we require to know from experiments on the material in any shape the relation between a, the induction, and α, the magnetic force at any point; for convenience write $a = f^{-1}(\alpha)$, or $\alpha = f(a)$. From these premises, without any further assumption, it is easy to see that a sufficiently powerful and laborious analysis would be capable of deducing the characteristic of any dynamo to any desired degree of accuracy. This we do not attempt, as even, if successful, the analysis would not be likely to throw any useful light on the practical problem. We shall calculate the characteristic, first making certain assumptions to simplify matters. We shall next point out the nature of the errors introduced by these assumptions, and make certain small corrections in the method to account for these sources of error, merely proving that the amount of these corrections is probable or deducing it from a separate experiment, and again compare the theoretical and the actual characteristic.

First Approximation.

Assume that by some miracle the tubes of magnetic induction are entirely confined to the iron excepting that they pass directly across from the bored faces of the pole pieces to the cylindrical face of the armature core. This, we shall find, introduces minor sources of error, affecting different parts of the characteristic curve to a material extent. Let I be the total induction through the armature, A_1 the area of section of the iron of the armature, l_1 the mean length of lines of force in the armature; A_2 the area of each of the two spaces between core of armature and the pole pieces of the magnets, l_2 the distance between the core and the pole-piece; A_3 the area of core of magnet, l_3 the total length of the magnets. All the tubes of induction which pass through the armature pass through the space, A_2, and the magnet cores, and by our assumption there are no others. We now assume further that these tubes are uniformly distributed over these areas. The induction per square centimetre is then $\frac{I}{A_1}$ in the armature core, $\frac{I}{A_2}$ in the non-magnetic spaces, $\frac{I}{A}$ in the magnet cores; the corresponding magnetic forces per centimetre

1. From the Philosophical Transactions of the Royal Society.

2. Added August 17th.—That Froehlich's formula cannot be a thoroughly satisfactory expression of the characteristic of a dynamo machine is evident from the consideration that E should simply change its sign with c, that is, be an odd function of c. There should be a point of inflexion in the characteristic curve at the origin. Another empirical formula $\frac{E}{a} = \tan.^{-1} \frac{c}{b}$ is free from this objection, but still fails to fully represent the approximation of the curve to a straight line on either side of the origin, and it is equally uninstructive with any other purely empirical formula.

Digitized by Google

J. & E. Hopkinson. *Phil. Trans.* 1886. *Plate* 16.

Sheet L.

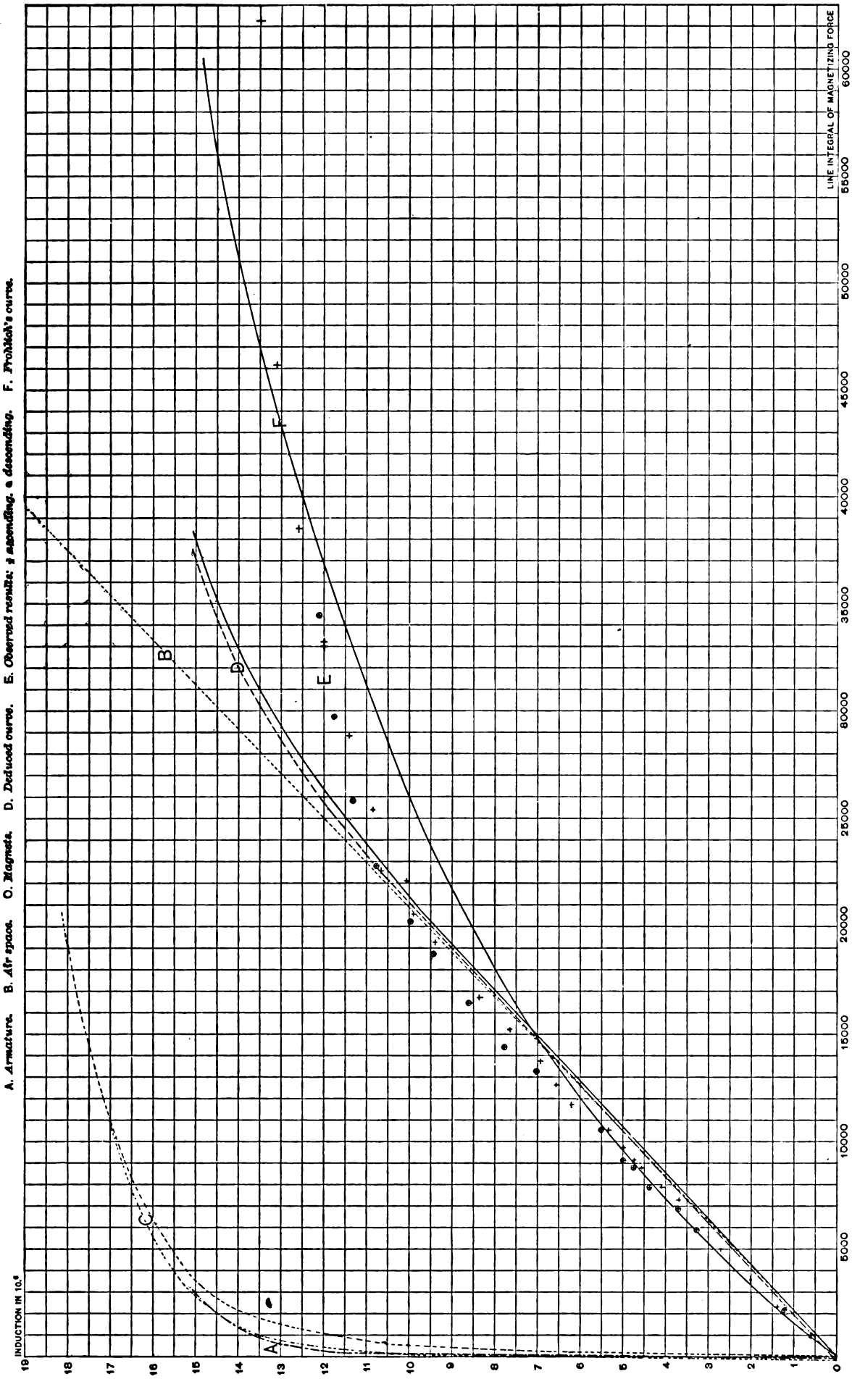

Digitized by Google

J. & E. Hopkinson. *Phil. Trans. 1886. Plate 17.*

Sheet II.

CORRECT SYNTHESIS OF CHARACTERISTIC CURVE.

A. Armature. B. Air space. C. Magnets. D. Calculated curve. E. Observations; + ascending, o descending. G. Yoke. H. Pole pieces.

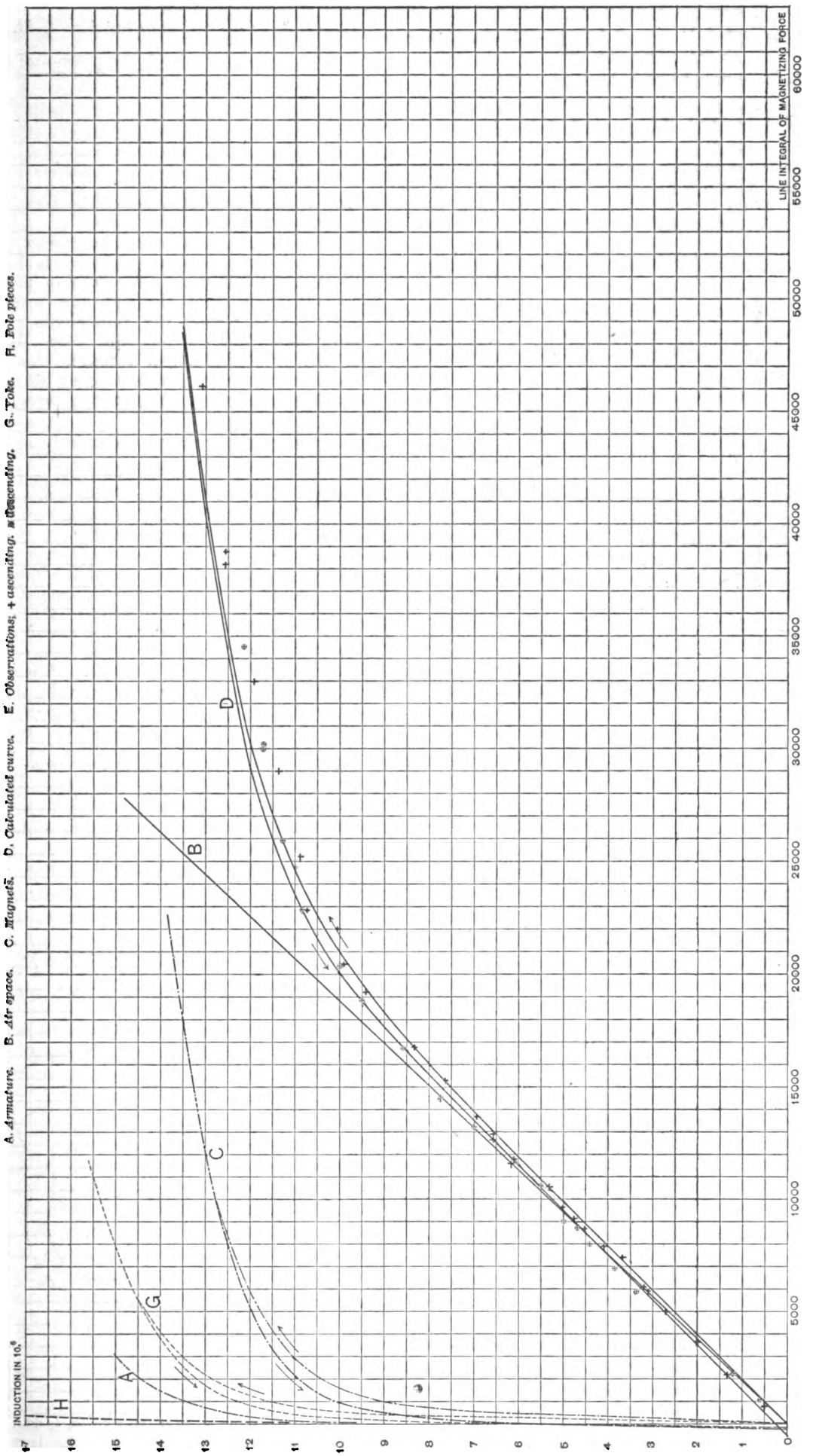

Digitized by Google

linear must be $f\left(\frac{I}{A_1}\right)$, $\frac{I}{A_2}$, $f\left(\frac{I}{A_3}\right)$. The line integral of magnetic force round a closed curve must be

$$l_1 f\left(\frac{I}{A_1}\right) + 2 l_2 \frac{I}{A_2} + l_3 f\left(\frac{I}{A_3}\right).$$

In this approximation we neglect the force required to magnetize pole-pieces and other parts not within the magnet coils to avoid complication. The equation of the characteristic curve is then

$$4 \pi n c = l_1 f\left(\frac{I}{A_1}\right) + 2 l_2 \frac{I}{A_2} + l_3 f\left(\frac{I}{A_3}\right).$$

This curve is, of course, readily constructed graphically from the magnetic property of the material expressed by the curve $\alpha = f(a)$. In sheet I. curve A represents $x = l_1 f\left(\frac{\nu}{A_1}\right)$ the straight line B $x = 2 l_2 \frac{y}{A_2}$, curve C $x = l_3 f\left(\frac{y}{A_3}\right)$, and curve D the calculated characteristic.

When we compare this with an actual characteristic, E, we shall see that, broadly speaking, it deviates from truth in two respects: (1) it does not rise sufficiently rapidly at first; (2) it attains a higher maximum than is actually realized. Let us examine these errors in detail.

1. The angle the characteristic makes with the axis of abscissæ near the origin is mainly determined by the line B. We have, in fact, a very considerable extension of the

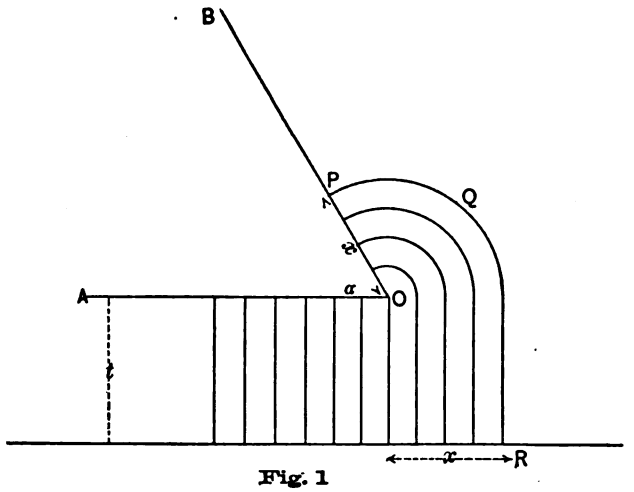

Fig. 1

area of the field beyond that which lies under the bored face of the pole-piece. The following consideration will show that the extension may be considerable. Imagine an infinite plane slab, and parallel with it a second slab cut off by a second plane making an angle, α. We want a rough idea of the extension of the area between the plates by the spreading of the lines of induction beyond the boundary. We know that the actual extension of the area will be greater than we shall calculate it to be if we prescribe an arbitrary distribution of lines of force other than that which is consistent with Laplace's equation.

Assume, then, the lines of force to be segments of circles centre O, and straight lines perpendicular to O A. The induction along a line, P Q R, will be $\frac{v}{(\pi-\alpha)x+t}$, v being difference of potential between the planes, and the added induction from O P B will be

$$\int_0^x \frac{v\,dx}{(\pi-\alpha)x+t} = \frac{v}{\pi-\alpha} \log. \frac{(\pi-\alpha)x+t}{t}.$$

Thus if $\alpha = \frac{\pi}{2}$ we have for $x = t$, $2t$, &c.

x ..... $\frac{1}{\pi-\alpha}$ log. $\frac{(\pi-\alpha)x+t}{t}$
t ..... .599
$2t$ ..... .904
$3t$ 1.109
$4t$ 1.263
$5t$ 1.387
$10t$ 1.792

showing that the extension of the area of the field is likely to be considerable.

2. The failure of the actual curve to reach the maximum indicated by approximate theory is because the theory assumes that all tubes of induction passing through the magnets pass also through the armature. Familiar observations round the pole pieces of the magnets show that this is not the case. If ν be the ratio of the total induction through the magnets to the induction in the armature we must in our expression for the line integral of magnetizing force, replace the term $f\left(\frac{I}{A_2}\right)$ by $f\left(\frac{\nu I}{A_2}\right)$; ν is not strictly a constant, as we shall see later; it is somewhat increased as I increases owing to magnetization of the core of the armature, and it is also affected by the current in the armature. For our present purpose we treat it as constant.

There is yet another source of error which it is necessary to examine. Some part of the induction in the armature may pass through the shaft instead of through the iron plates. An idea of the amount of this disturbance may be readily obtained. Consider the closed curve A B C D E F, A B and F E D C are drawn along lines of force, A F and B C are orthogonal to lines of force. Since this closed curve has no currents passing through it, the line integral of force around it is nil; therefore, neglecting force along E D, we have force along A B is equal to force along F E and D C. In the machine presently described we may safely neglect the induction through the shaft; the error is comparable with the uncertainty as to the value of l_1; but in another machine, with magnets of much greater section, the effect of the shaft would become very sensible when the core is practically saturated.

The amended formula now becomes

$$4 \pi n c = l_1 f\left(\frac{I}{A_1}\right) + 2 l_2 \frac{I}{A_2} + l_3 f\left(\frac{\nu I}{A_3}\right) + l_4 f\left(\frac{\nu I}{A_4}\right) + 2 l_5 f\left(\frac{I}{A_5}\right)$$

where l_4 is the mean length of lines of force in the wrought

Fig. 2

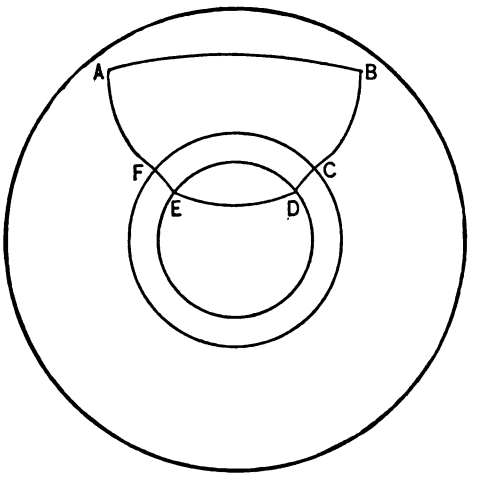

iron yoke, A_4 the area of the yoke, l_5 and A_5 corresponding quantities for the pole pieces, the last two terms being

Digitized by Google

introduced for the forces required to magnetize the yoke and the two pole pieces.

We now repeat the graphical method of construction exactly as before, the actual observations of induction in armature and current being plotted on the same diagram. Sheet II. (plate 17), in which curve, G, represents the force required to magnetize the yoke, and curve, H, that required to magnetize the pole pieces. Before discussing these curves further, and comparing the results with those of actual observation, it may be convenient to describe the machine upon which the experiments have been made, confining the description strictly to so much as is pertinent to our present enquiry.

(*To be continued.*)

ABSTRACTS AND EXTRACTS.

THE ELECTRICAL TRANSMISSION OF ENERGY.

WHILST M. Marcel Deprez has been occupied in carrying out his important series of experiments on the electrical transmission of power between Creil and Paris, of which we have from time to time published particulars, M. Fontaine, who, at the Vienna exhibition of 1873, made the first public demonstration of this nature, addressed himself to the task of realizing in a simple and inexpensive manner, a means of electricial transmission which should fulfill the conditions of the imposing programme prepared by his scientific competitors. He first cut out one of the costly elements of the installation by placing the generating and receiving dynamos in the same building, and by substituting for the line connecting the station at Creil with that at La Chapelle, a resistance equal to 100 ohms. Of course the objection may be fairly made that an experiment which is to serve as the basis of practical applications, must be carried out as closely as possible under actual conditions, with a working line, which would introduce all the difficulties and contingencies of practice. But on the other hand this strict approximation to reality is purchased very dearly, and the information it affords is scarcely worth the cost of 112 kilometres of heavy cable, and special posts required for the Creil experiments. When it is possible to obtain at a nominal cost the equivalent of this line, with the additional advantage of being able to follow each phase of the experiment at both ends at the same time, without any of the complications inseparable from widely separated stations, there can be little question as to the advantage of M. Fontaine's method.

The experiments were carried out at the works of the Compagnie Electrique, and no new apparatus was introduced during the trials. The dynamos employed were Gramme machines of the "Superieur" type, but in order to attain the enormous tensions employed by M. Deprez with his especially constructed dynamo, M. Fontaine placed four machines in series in such a way as to obtain a fall of potential of 6,000 volts; the current was about 10 amperes. The receiving machines were three in number, of similar type, and also arranged in series, and the primary motor was a 100 h. p. engine. Under these conditions an experiment was carried out by M. Mascart, with the following results, which were embodied in a paper submitted by him to the Academy of Sciences on the 20th of October last:

Speed of engine	56 rev. per min.
" " generators	1,298 " " "
Difference of potential at the terminals of first dynamo	1,490 volts.
Difference of potential at the terminals of second dynamo	1,505 "
Difference of potential at the terminals of third dynamo	1,498 "
Difference of potential at the terminals of fourth dynamo	1,508 "
Difference of potential at the end of conductor	5,996 "
Resistance of line	100 ohms.
Current	9.34 amperes.
Power of engine	112.8 h. p.
Useful energy of engine	85 per cent.
Energy imparted to generating dynamos and transmitted to receivers	95.88 h. p.
Speed of receiving dynamo	1,120 revolutions.
Work delivered at the brake	49.98 h. p.
Efficiency	52 per cent.

If these results are compared with those embodied in the report of M. Maurice Levy upon the Creil experiments, it will be seen that the two experiments have been made under technical conditions practically similar. But the former are far superior as regards the economic phase of the problem, M. Levy estimates that the transmission of 50 h. p. from Creil to Paris would require a generating dynamo costing 50,000 francs and a receiver costing 30,000 francs, besides the conductor. In the experiment of the Compagnie Electrique, the seven Gramme machines represented a total value of 16,450 francs and a total weight of 8,400 kilos, so that the transmission of 50 h. p. through a resistance of 100 ohms involved, per horse-power, the use of 167 kilos. of dynamo at a price of two francs per kilo.

These figures are interesting because they correspond with those under the best industrial conditions that have been realized up to the present time in the transmission of power through considerable distances. Moreover, it is evident that there would be a great advantage in using a uniform and commercial type of dynamo grouped to any desired extent, instead of building special machines for every separate nature of installation. Whatever may be their practical value, it is clear that these experiments of M. Fontaine mark a distinct progress towards the solution of the interesting problem of the transmission of power by electricity.—*Engineering.*

NEW METHOD FOR DETERMINING THE TIME OF OSCILLATION OF A MAGNET.

IN a recent number of the *Annalen der Physik und Chemie*, H. G. Hausemann describes a new arrangement for determining the periodic time of a suspended magnet. This method, which can be adopted for any similar purpose, consists of an ingenious application of photography for recording the differences of agreement in position between the magnet under observation, and a seconds pendulum. The magnet is provided with a mirror in the ordinary way, by reflection from which the divisions of a scale mounted before it can be read off in a telescope. A small mirror fixed to the pendulum and parallel with its plane of oscillation, reflects, when at rest, the beam of an electric light upon a prism, provided with a broad slit crossed by a narrow vertical bar; from the prism the light is reflected upon the mirror of the magnet, from which, when near its neutral position, the barred slit is focused in a small photographic camera especially constructed for the purpose. The slide of the latter is furnished with a micrometer screw, so that the plate can be moved through a known distance between any two exposures. The elongations can be read on the telescope in the usual way, and by measurement of the distance between the images on the negative, the number of oscillations of the magnet corresponding to a given number of those of the pendulum can be accurately determined, if the times of exposure are chosen when the pendulum and magnet are both near their positions of rest. This method naturally admits of extreme accuracy in the determination of the quantities sought for besides reducing the time required.

COFFERDAM.

THE name of "cofferdam" has been given to a curious substance, a preparation of cellulose, which has recently been obtained by a young French chemist, M. P. Germain. Its uses in connection with electricity have been investigated by M. André Reynier, the electrician to the Société

Digitized by Google

Genérale des Téléphones. From a report which has been written by M. Reynier for *L'Electricien* we gather that "cofferdam" or "sporique," as its finer variety is termed, is prepared from the husks of the cocoa-nut; it has the color and aspect of cocoa powder. The extraordinary properties of this substance arise from its extreme lightness, its specific gravity being represented by the abnormally low figure of 0.08. Under the simple pressure of the hand its volume can easily be reduced to one-third, and even then its density is only about one-fourth that of good sponge. Its absorbing power surpasses that of all other known material. A given volume of "cofferdam" can easily be made to take up a volume of liquid equal to itself, without any perceptible increase in the total volume; or, in other words, the volume occupied by the cofferdam in the combination is negligible. A good sponge will absorb seven times its weight of water, cofferdam absorbs 12.5 times its weight of water. The substance has hitherto been found to be insoluble both in acids and in alkalies and in solutions of salts. It is, therefore, evident that it will thus readily lend itself for use in primary or secondary batteries. M. Reynier states that the resistance of a battery is not perceptibly increased by its presence, and it is suggested that by saturating two separate slabs of the substance it may be employed in two fluid batteries, thus doing away with the porous cell. Not only are the liquids thus kept separated and preserved from accidental spilling, but it is also found that the loss from evaporation proceeds much more slowly. It would appear that the substance is certainly worth a trial for the purpose indicated. —*Electrician* (London).

SELF-INDUCTION IN VOLTMETER COILS.

In reply to a correspondent, M. Hospitalier gives the following experiment, to illustrate the effects of self-induction in the coils of a voltameter. Place in circuit an incandescent lamp, an electro-dynamometer, a resistance without self-induction, and an alternating current machine, and connect the voltmeter in parallel with the lamp. By adjusting the speed of the machine and the value of the resistance, bring the lamp to its normal luminosity; note the readings of the dynamometer and the voltmeter. Now increase the speed of the machine, and by adjusting the resistance again reduce the lamp to normal incandescence. The dynamometer reading will be the same as before, but the voltmeter reading will be smaller. The greater the increase in velocity, the greater will be the difference between the two readings of the voltmeter. Are we to imagine that the number of watts consumed in the lamp is different in the two cases? Certainly not. We are simply to conclude that a voltmeter containing a coil inductively-wound, especially if there be also a soft iron core, is utterly useless for measuring alternating currents.

A SERMON TO EMPLOYES.

The following is a verbatim copy of a notice which the Chicago, Burlington, and Quincy Co. has had printed, framed, and sent to various shops and offices. They are posted for the benefit of the employés. The sentiment conveyed is given as that which actuates the officials of the company in their treatment of employés. "The servant, man or woman, who begins an application for service by inquiring what privileges are attached to the offered situation, and whose energy is shown chiefly in stipulations, reservations, and conditions to lessen the burden of the place, will not be often worth the hiring. The clerk whose last place, was 'too hard for him' has a poor introduction to a new sphere of duty. There is only one spirit that achieves a great success. The man who seeks only how to make himself most useful, whose aim is to render himself indispensable to his employer, whose whole being is animated with the purpose to fill the largest possible place in the walk assigned to him, has in the exhibition of that spirit the guarantee of success. He commands the situation, and shall walk in the light of prosperity all his days. On the other hand, the man who accepts the unwholesome advice of the demagogue and seeks only how little he may do, and how easy he may render his place and not lose his employment altogether, is unfit for service; as soon as there is a supernumerary on the list he becomes disengaged as least valuable to his employer. The man who is afraid of doing too much is near of kin to him who seeks to do nothing, and was begot in the same family; they are neither of them in the remotest degree a relation to the man whose willingness to do everything possible to his touch places him at the head of the active list."

MAGNETIC FIELDS.

Under the above heading, I observe in your issue of November 12th that Messrs. Mather and Platt claim priority for an application of short, thick electro-magnets in 1883, to the use of a form of electro-magnet for dynamo machines, which a knowledge of the laws of electro-magnetism would appear to point out in many cases as the most suitable and efficient—they would appear to claim priority in the use of short and thick electro-magnets more especially in connection with a Siemens or Edison armature, and they also assert thereby to have "led to entire reconstruction in this respect of all modern types of dynamo machines."

As regards types with armatures not of the Siemens, I should like to point to the short and massive magnets used in the Brush machine, and which have survived, as recently seen in the colossal Brush electro-metallurgical dynamo, to successfully compete with the reconstructed dynamos.

The Bürgin in 1879 also appeared to have had massive field magnets, as also the Heinrichs in 1880.

Of armatures of the Siemens type, the well-known Thomson-Houston appeared in 1880, the armature revolving, it is said, in an intense field; the magnets certainly do not appear to have contained much metal, but the field coils are extremely short and of large diameter.

Lastly, the Weston dynamo machine with Siemens armature, and which was originally built with multiple magnets, as in Edison's machine, appeared in 1882, with double horse-shoe, short and massive magnets, and to which machine with one of its magnets removed, the Edison-Hopkinson of to-day is extremely similar; from the engravings appearing in *Engineering*, in 1882, the Weston field magnets appear in length about twice the diameter of the armature, and the aggregate sectional area of the double field appears to be much greater than the cross-section of the armature; high character of design is evident from the fact of the perfect self-regulation, though only shunt wound.

No doubt there are other instances of well-proportioned magnets, but this is sufficient to show that the successful results accruing therefrom in dynamo machines were well known before 1883.—G. E. D. in *Electrical Review* (London).

HORN'S ELECTRICAL TACHOMETER.

The electrical tachometer of Dr. Horn, of Leipzig, is based upon Arago's well-known observation, that a magnetic needle suspended over a rotating copper disc, is deflected in the sense of the rotation. To render the device practical, Mr. Horn replaces the weak earth magnetism by the field of a strong steel magnet of the ordinary horse-shoe type, the needle by an I-shaped armature of soft iron, and the copper disc by a strong copper capsule. The armature needle moves in the plane of the magnet inside the rotating capsule. As the

Digitized by Google

foucault currents induced are proportional to the intensity of the field and to the velocity of rotation, and as the magnetic moments with which the needle is drawn back to its normal position at least between the limits of zero and 45 degrees, are also proportional to the angles of deflection, the deflections will be proportional to the speed. The gauging of the instruments is done experimentally. In the smaller instrument the needle is two inches long, and the diameter of the copper capsule a little greater. The axis of the revolving capsule may be fitted with a three-cornered top to fit into a corresponding cavity in the revolving shaft. Experiments on a minor scale have convinced Mr. Horn that small variations in the intensity of the magnetic field will not influence the deflections of the needle.

CORRESPONDENCE.

NEW YORK AND VICINITY.

Conduit Work Postponed on Account of the Weather.—Electric Railways and Motors.—The Baltimore and Ohio to Change its Quarters.—A Little Telephone War at East Orange, N. J.—Hackensack Wants Electric Lights.—The Electric Accumulator Company.

THE early arrival of an "old fashioned" winter put a sudden quietus on the extension of electrical conduits in this city, much to the satisfaction of some parties who were expected to do a large quantity of work in a short space of time, for which they were not thoroughly prepared. Winter is the proper time, however to fell trees, and it is the fond hope of the subway commissioners, that Sixth avenue may be the scene of a chopping bee next month, and that the work of clearing away the poles will be duly chronicled in the daily papers. A considerable amount of cable has already been drawn into the Broadway conduit of the Western Union company, which, together with contemplated cables on the elevated railway structures will make a fair beginning so far as that corporation is concerned. The question of burying the arc-lighting wires is still unsettled however, and no definite plans have been agreed upon. Whether the existing air lines will last until a conduit is prepared for them is a very doubtful question.

The use of electricity on street railways is not receiving much encouragement in this city. The traffic of all descriptions is becoming so immense that the only relief appears to be from underground lines, or more elevated roads. A plan for a cross-town road between Washington and Fulton markets has been at least temporarily defeated by a veto from the mayor. All of the electrical engineers interested in electric railroading are busily engaged, some in practical work, and some experimenting with a fair prospect of making decided progress during the coming year. It is a most important branch of the business, and when we realize that steam locomotion has apparently reached its limit of speed, it is apparent that there is still room for progress.

In the line of small motors, it may be noted that there is a rapidly increasing development, and their practical use in New York city will not be a novelty two years hence.

The Baltimore and Ohio Telegraph Co., will soon begin preparations for a radical change in the location of its headquarters. The old Brandreth House, corner Canal street and Broadway, is to be refitted for the joint occupancy of the Baltimore and Ohio railroad, telegraph, and express offices. While there is a large amount of telegraphing done in that part of the city, it has never before been looked upon as a suitable location of a main office, but it should be borne in mind that branch offices are now a very important factor in the telegraph business, and that wherever various connecting lines converge and messages are relayed, whether at Harlem or the Battery, such a centre of electrical industry will be considered a main office. The expense of making a change of this character is such, that it hardly seems probable that any immediate consolidation with the Western Union company is to be looked for.

Quite a "merry war" lasted for two or three days in Park avenue, East Orange, N. J., over the attempt of the New York and New Jersey Telephone Co. to erect poles and stretch a line of wires along that avenue. A number of the property owners laid their grievance before the township committee, after which Mr. Bingham went home, got out an axe, and chopped down four poles in front of his property, near North Clinton street. Next day Mr. Broome secured an injunction to restrain the company from continuing the work in front of his property, and when its men tried to extend the wires in front of the Dwyer property, near Alington avenue, Mr. S. M. Long, the agent for Mr. Dwyer, threw himself into the breach, and with the help of chief of police Blaurock, effectually resisted the trespass. Mr. Hyde, the telephone people's attorney, at length promised that the work should not be carried on any further until the consent of the property owners should be obtained.

Hackensack, N. J. is now pining for an electric light system, because the brilliancy of the rival town of Passaic may be seen in the distance across the meadows. If their mosquito killing qualifications were only more generally known, arc lights would be still more popular throughout the state.

The business of the Electric Accumulator Co. has advanced far enough to bring on a strike at its Newark factory, where some of the men engaged in treating the lead plates of storage batteries, concluded that the pay they were getting was not quite sufficient to counteract the effects of lead colic. No work, however is so dangerous but that men can be found who are willing to undertake it, and the manufacture of accumulators will continue. The determined manner with which this young company has grappled this electrical conundrum, and the character of the men who are identified with it, leads to the belief that we shall soon hear good reports from what is, comparatively speaking, an unexplored field.

NEW YORK, December 21st, 1886.

PHILADELPHIA.

The Edison Light.—Successful Electric Lighting at Harrisburg and Elsewhere in Pennsylvania.—The Western Union and Bankers and Merchants' Suit.—Long-Distance Telephoning.

A MEETING will be held in a day or two by persons interested in the Edison Electric Light Company of Philadelphia, which was recently granted a charter, to form a temporary organization and to formulate plans for a permanent organization.

Among the prominent business men of this city who are actively interested in the matter, and who are working with W. Preston Hicks, the agent of the Edison company, who has an office at 108 South Fourth street, are Charles M. Swaim, B. K. Jamison, Amos R. Little, Henry M. Dechert, and Samuel B. Huey.

There are many electric light companies in Pennsylvania, each of them paying from 6 to 25 per cent. interest to stockholders. The plant at Harrisburg is one of the best in the state, but there are others almost as good in Reading, Wilkesbarre, Lancaster, West Chester and Chester. The offer of the New York company to establish a plant in this city on the same basis as those in New York and Boston was promptly accepted, and the men named above say they intend to have Philadelphians supplied with better light than ever before. One of the Philadelphians who has taken a very active interest in obtaining the charter said last evening:

"It is a first-class business enterprise, and I have not the least doubt but that it will pay as well, or even better, here than in other cities where it has been tried. Our main object will be to give to Philadelphians the best and cheapest light for their dwellings by night, as well as to furnish cheap motive power for running machinery, etc., by day, and all by the same plant. It is claimed that the light can be provided for much less money than the gas now in use."

The lawyers representing the various interests in the litigation concerning the receivership of the Bankers and Merchants' Telegraph Company came before Judge Butler, in the United States Circuit Court recently, and argued a number of motions in the cause. Colonel Robert C. Ingersoll, who represents the United Telegraph Lines Company, of New York, which is deeply interested in the Bankers and Merchants' Company, asked leave, on behalf of Clinton P. Farrell, the recently appointed receiver of that company in this circuit, to bring suit for damages against the Western Union for the cutting of the Bankers and Merchants' wires. The application was granted. He also asked that the bill of complaint filed on behalf of the Farmer's Loan and Trust Company for foreclosure under the Bankers and Merchants' mortgage be dismissed.

Messrs. Turner & McClure, of the New York law firm of Turner, Lee & McClure, who represent the Trust company, asked that the latter be allowed to intervene as party defendant in the suit of Edwin Middleton against the Bankers and Merchants' company, and also that the appointment of Mr. Farrell, as receiver of the latter, be set aside. It was urged that the gentleman was related by marriage to Colonel Ingersoll, and therefore could not be considered as a disinterested party. Mr. Ingersoll contended that Mr. Farrell was in every way fitted to fill the position, and that the question of relationship ought not to be taken into consideration. The other side then urged that if the court decided to allow Mr. Farrell to remain as receiver, a co-receiver would be desirable to act with him. After an order had been granted making it necessary that the Trust company be notified of all matters that may come up before the court, or the master in the case, the argument closed.

Judge Butler then declined to appoint a co-receiver.

The guests of the Lafayette Hotel amused themselves the other day by chatting with their friends in New York and Brooklyn over the long-distance telephone system, with which the hotel has just been connected. Everybody was anxious to

Digitized by Google

test the new system, and all were pleased with its successful operation. Long-distance telephony will be a permanent attachment of the Lafayette.

PHILADELPHIA, December 17, 1886.

BOSTON.

New Weather Signals.—Western Union Telegraph Co. Sued for Taxes.—A New Telegraph Co.—The Erie Telephone Co. Suits.—Resignation of Vice-President Bowditch.—Break-down of Martha's Vineyard Cable.—Underground Construction by the Edison Light Co. and the N. E. Telephone Co.—Electric Light and Electric Railroad in Boston and Suburbs.—Electric Station Indicator on the Boston & Maine R. R.—Boston's Antiquated Fire-Alarm Bells.—Edison Light Progress in Boston.

THE chief signal officer of the United States signal service has issued a circular descriptive of the new code of weather signals adopted by the signal service for the inland stations, which are to be used on and after March 1, 1887. The indications are to be telegraphed as at present at one o'clock A. M., and are intended to cover the weather for the succeeding twenty-four hours, beginning at seven o'clock A. M. The signals to be used are as follows: No. 1, a white flag, six feet square, which will indicate clear or fair weather, no rain. No. 2, a blue flag, six feet square, will indicate rain or snow. No. 3, a black triangular flag, six feet at the base and six feet in length, will always refer to temperature, and will be used as follows: When placed above No. 1 or No. 2, it will indicate warmer weather; when placed below these flags it will indicate colder weather; when this black signal is not displayed in connection with either of the other signals, the indications are that the temperature will remain stationary, or that the change will not be above 5° from that of the previous twenty-four hours. The cold wave flag is No. 4, a white flag six feet square, with a black square in the centre. This signal will not be displayed unless a temperature of 45° or less is expected, nor is flag No. 3 to be displayed with it.

At the request of the state treasurer, a suit has been brought by the attorney-general against the Western Union Telegraph Company. A bill was filed in the State Supreme Court last April to enjoin the company from doing business in Massachusetts, because it has not paid any taxes for the year 1885. The amount was $10,618, which was due November 2. As it is a foreign corporation, the company removed the suit to the United States Circuit Court, and there filed an answer, admitting substantially all allegations in the bill of complaint, but claiming that the company really owed only a small fraction of the tax, because most of its lines are upon railroads, which are declared post roads by congress, or are over or under navigable waters, which are in the jurisdiction of congress. The first of the hearings in the suit was held before Francis S. Fiske, who has been appointed examiner, on Saturday the 27th ult. The defendant has two defenses. The main one is that by a law of the United States, with the provisions of which the company has complied by running its lines along the national post roads and by giving priority to government business, it is exempted from taxation. For a further defense it is alleged that even if the company is liable to taxation the amount assessed is far in excess of what would justly be due.

The Brockton City District Telegraph Company filed its certificate of incorporation on the 3d inst., in the county clerk's office at New York. It has a capital stock of $15,000, with the privilege of increasing to $25,000. The company is to run its lines of telegraph from Brockton, Mass., through that state and Connecticut, to New York.

After adjournment of over four months, the hearing in the suits brought against the Erie Telephone & Telegraph Company by three of its officers to recover a large amount of money alleged to be due them for services, recommenced Tuesday morning, November 17th, in the court house at Lowell. The direct examination of Charles J. Glidden, till recently treasurer of the Erie company, was resumed by General Butler. A great mass of evidence with regard to the transfer of the southwestern company of Arkansas, to the southwestern company of New York, showed that at a meeting of three directors they accepted their own resignations and appointed their own successors. General Butler claimed that the transfer was illegal, as the deed was not sealed or witnessed.

The Cleveland company purchased for $412,500 capital stock originally $150,000. The capitalization was first $1,000,000. Later it was increased to $1,500,000. The cash profits for seven members of the syndicate were $377,500. The profit of William H. Bent, now suing for services as attorney on the transaction, was $50,000. The capital of the Cleveland, northwestern and southwestern companies was $210,000. This was swelled to $5,000,000, of which $2,000,000 was kept in the treasury. Five millions might have been retained as well as $2,000,000. It is only a matter of form.

A mass of testimony was introduced from day to day; the final upshoot of the matter, was, that on the 2d of December, the suit of William H. Bent against the Erie Telephone Company was decided in favor of the company by the arbitrators. This affair has been a disgraceful exhibit.

Mr. Chas. P. Bowditch has resigned the vice-presidency of the American Bell Telephone Co., and directorship in the same, and also his directorship in the New England Telephone Co. There have been rumors of other resignations of telephone men, the truthfulness of which will soon appear.

The government cable between the islands of Martha's Vineyard and Naushon gave out Thursday, December 2d. The steam collier Wilkesbarre was seen anchored on the line, and it is presumed her anchor fouled and broke it. This is the first interruption in this cable since it was laid, about a year ago.

The Edison Electric Light Co. have been busy the past month putting down their underground cables. A large force of men was engaged in burying electric wires in Washington street. A shallow trench was dug on the easterly side, and in it were laid three iron tubes, each one containing three large copper wires imbedded in asphalt. These are the main conductors for the Edison incandescent electric lighting system. A similar trench will be dug on the westerly side of the street, and six tubes, containing eighteen wires, will be placed in it. Within a few weeks the company will have facilities for supplying twenty thousand electric lamps. The main station is in the rear of Masonic Temple.

The New England Telephone Co. have pushed their underground work steadily down Tremont street, using mainly the wood conduit, mentioned in November letter. At the lower end of Tremont street, at Roxbury station, 2,600 feet of the Richardson carbonized stone cement conduit, is being put in place. This conduit is in four feet lengths of square cross-section, with one end concave and the other convex, to make good end joints—it has nine 2½-inch holes for cables.

The Chelsea aldermen, on the evening of the 16th ult., received from the New England Underground Telephone and Electric Light Company a petition for leave to open streets in Chelsea to lay underground wires, from branches in Salem and Lynn, to the main office in Boston; referred to the street committee.

The Boston Consolidated Street Railway Company has filed a charter in the secretary of state's office, asking the Legislature for authority to construct, maintain, and use railways in Brookline, Cambridge, Somerville, and Chelsea. President Powers says it is not probable that the Consolidated will adopt the cable system this year, though it may do so in 1887. He was of the opinion, however, that the use of an electric system was more probable than that of a cable. The Daft and Sprague motors, and perhaps some others, Mr. Powers said, had shown good results, and upon the whole, were far more likely to be adopted than the cable system or surface roads.

There are three petitions from projectors of elevated roads on file for the next legislature. Thomas J. Mayall, of Reading, desires to build an elevated railway between Jamaica Plain and Boston Common, to be operated by cable, electricity, pneumatic tube or steam; John W. Candler, Roland [redacted]thington, M. D. Ross, and others, ask for incorporation as the Boston Elevated Railroad Company, with power to build, maintain and operate an elevated railroad from some point at Franklin Park to some point at or near Post Office square, Park square or Scollay square, all in the city of Boston; and the people interested in the Moulton system again petition for incorporation as the City Elevated Railroad Company with authority to build and operate a circuit road from Scollay square to Harvard square, Cambridge.

There appears to be a general desire of the gas companies to go into the business of furnishing electric light and power. Petitions with this end in view have been filed by the Boston, the Bay State, the Newton & Watertown, the Brookline, the Clinton (which asks to increase its capital stock to an amount not exceeding $250,000), the Roxbury (which also asks for authority to lease or transfer its franchise, lease its works or contract with others to carry on its works), the Chelsea (to furnish Chelsea and Revere), the South Boston (with authority to acquire by purchase or lease the property of or contract for carrying on the works of any other gas company whose territory adjoins its own), the Jamaica Plain, the Cambridge (supplying Cambridge and a part of Somerville), the Dorchester (with authority to sell and convey its property and franchise), and the Newburyport companies.

A representative of the Boston Gaslight Company states that the use of electric lights in some stores has not decreased the consumption of gas, as other stores have used more gas than formerly in order to make a brilliant illumination. It is not the intention of the company to manufacture water gas unless the price of labor is increased. The representative of the company said gas is likely to come into general use for other purposes besides illumination. For example, it is now used to advantage in gas engines, in which the motive power is gained by a series of regulated explosions. These have not come into use so much in Boston as in some other sections. It is also valuable for heating and cooking. He thinks the future of electricity is more in the line of motive power than of light.

The Salem Electric Light Company has elected officers for the

Digitized by Google

ensuing year as follows: President, C. H. Price; directors, C. H. Price, J. F. Almy, I. P. Harris, George M. Harris, Z. A. Gallup, B. W. Currier, and S. Fred Smith; clerk and treasurer, Henry M. Batchelder. The capital stock of the company is to be increased from $40,000 to $70,000. The company has 250 incandescent lights, 129 city arc lights, and 105 commercial arc lights in use.

At a meeting of the Lynn aldermen on Nov. 16th, a proposition to light the City Hall by the Sawyer & Man system of electricity was referred to the committee on public property. Mayor Russell has executed a contract with the Cambridge Electric Light Co. to furnish the city with lights for one year at the rate of 55 cents per night for each light.

The Electric Light Co. of Salem ordered the fire-alarm wires removed from their poles where there were lights, and as the order was not complied with, and the light company claimed that it was dangerous to the persons operating the lights, the wires were thrown into the street on Dec. 9th.

During the last few weeks the six o'clock P. M. train from Boston on the Eastern division of the Boston & Maine railroad has had in operation a station indicator. In the upper left hand corner of each end of the cars is a cherry box, about eighteen inches square. Gilt letters on a dark glass front say, "The next station is," and then follows a blank space cut in the glass about a foot in length and two inches wide. This remains blank until the train has crossed the Charlestown and Somerville "know-nothings," when a slight whirring noise is heard in the box, followed by the sharp ring of a bell. The word "Chelsea" appears, and the whole reads, "The next station is Chelsea." Inside the box is a cylinder run by clockwork, and the works move by electricity. On the cylinder is a series of wooden slats with the names of stations painted on them in plain letters. Every indicator on the train may be moved by a gentle touch on a push button in any one car or on the locomotive. Those on this train have been operated from the baggage car.

Years ago, New York, Chicago, Brooklyn, and other large cities, abandoned the antiquated system of clanging the bells when there was a fire, but in Boston the alarms have been given on all the bells all over the city for a fire in any part of the city. The question has been frequently asked why the bells in East Boston should be rung for a fire in Dorchester, and why should the people in Charlestown be waked in the middle of the night to hear the bells clang out the warning that an ash barrel in Brighton was ablaze. But no answer has ever been made that would satisfactorily account for this state of things. The present board of fire commissioners has decided, however, to reduce the number of bell alarms to the minimum, and it will not be long before in the city proper, north of Dover street, the system will be abandoned altogether. And the commissioners have decided upon this policy, and, in fact, have begun to put it in operation without any flare of trumpets.

But as long as the fire department of Boston is constituted as it is at present, the system of bell alarms cannot be completely abandoned. In the city proper, or wherever the men are permanently stationed, the bell alarm is of no use to them. When an alarm is given from a box, the firemen in the houses receive it on the tapper, and are on their way to the fire before the gong rings. The men sleep in the houses, and are there at all times except when away at their meals or on a leave of absence of longer or shorter duration. But in the outlying districts, such as Dorchester, Roxbury or East Boston, there are "call" companies and "call" men, who have other employment besides fire duty, and who do not sleep in the houses of the department. They depend upon the bells to notify them of the fire.

Four years ago the system of incandescent interior lighting was introduced in Boston by Mr. Edison. It was applied before and behind the scenes in the new Bijou theatre, and for a time was a novelty. The use of the new light rapidly increased, and by degrees the electric current was applied to motive power, and now not only are stores and dwellings lighted by this means, but electricity is applied by the Sprague motor to the running of printing presses and elevators, passenger and freight, fans for hotels and restaurants, automatic ventilators, etc. To meet the growing demand, electric motors have been improved until from a capacity of a half-horse power they have been increased to 10 and even 20 h. p. So general has the employment of electricity become that the Edison company, to provide for the future, is now laying underground wires throughout its domain. The mains will permeate every street where the light is demanded, and soon this mode of lighting will be distributed at moderate cost. Provision is being made for 10,000 lights, and to meet further prospective demands a building is being put up in Head place, from which 40,000 lamps will eventually be lighted. A brick smoke-stack, large enough to serve boiler for 2,000 h. p., will be built, and twenty engines and fourteen boilers will ultimately be employed in generating the electricity.

Incandescent lamps of various candle-power can be furnished, and the charge is in proportion to the power. For each 10 candle-power lamp the charge is three-quarters of a cent for each hour that the lamp is in use, and for lamps of greater or less power the charge is correspondingly increased or diminished. The basis of calculation is the 16 candle-power lamp, for which the charge is 1 1-5 cents per hour of use. In the language of electricians, the use of three lamps for two hours would be six "lamp hours," as would also the use of six lamps one hour, or one lamp six hours. Some of the largest consumers are the Adams House, 450; the Bijou theatre, 700; the Young Men's Christian Union, 400; and the store of Bigelow, Kennard & Co., 190 lamps.

BOSTON, November 16th, 1886.

CHICAGO.

The Contention Over Telephone Rates at Rochester.—Considerations on the Increased Cost of Service per Subscriber in Large Telephone Exchanges.—A Move Toward Public Electric Lighting by the Chicago Common Council.

THE troubles at Rochester, N. Y., between the people and the telephone company is the same old "cabbage warmed over" question which has agitated the business public of all towns whenever there has been any material increase in the original plant, and especially if the plant was one of those which had its birth in the early days of the telephone, when no one knew what the service would cost, and the question of exchange or no exchange was a matter requiring all the methods known to solicitors to induce people to join.

Take for instance the case of Chicago. When it was first suggested that an exchange would be a convenience—necessity was not then thought of—the general public here scoffed at the idea. The answers to arguments in its favor were such as a past condition of things suggested, and the earnest endeavors of the original projectors of the scheme were laughed and jeered at by many, and more than one personal friend of the promoters went so far as to intimate, without perhaps mentioning names, that "somebody was crazy."

The first exchange in this city was made up of parties *all in one line of business*, a fact which in itself shows how little the public understood the capabilities of an exchange. The promoters of the enterprise, after having labored, wheedled, coaxed, driven, almost bribed the subscribers for weeks, did finally corral eleven banks and bankers into an exchange, and commenced business with a little two-feet square switch-board, modeled after the telegraph plug-board.

After the thing had ceased to be a nine days wonder, and experimental tests had come to be matters of no interest, the actual amount of labor required by business proper was so slight that one person could readily do all the answering and connecting, keep two public library cards busy exchanging books, and take an occasional nap into the bargain, and that person an extremely small and cheap boy.

There was a gigantic profit in a rental of $50 per annum, with certain privileges connected with the American District Service thrown in.

The exchange grew. The switch-board was added to; the one "little boy blue" became an army divided into day and night watches; wires were run to distant parts of the city, and sub-exchanges were added to the system. There were gangs of constructors and gangs of repair men, and a bureau of battery men and inspectors. The list of subscribers now numbered over five hundred, and the directors on looking over the yearly statements were astonished to find that instead of making money they were falling behind, and the service was becoming heavy and slow for want of facilities for handling the business.

Then came the first conception of the multiple switch-board, which eventually relieved the pressure, and right here, during the studies which evolved that invention the fact of the rapidly increasing expense of a growing exchange was first made manifest. Experience alone had taught a curious fact, simple enough when found, yet something peculiar, and this is it: Every new subscriber adds to the previously possible connections as many connections as there were subscribers before his admission. To illustrate this, suppose we have an exchange of 5,000 subscribers. The addition of the last subscriber gives as the total number of connections possible the number of subscribers multiplied by itself less one, the last man in, or: 4,999x5,000 — 24,995,000. He has added 4,999 possible calls which he may make, and 4,999 possible calls upon him may be made. Now take an exchange of three times that size, and the addition of one subscriber to an exchange of 14,999 subscribers gives him a chance to call for each of these, and they in turn may each call for him; and twice 14,999 is the sum of additional "hullos" which this last individual brought into the exchange, has made possible. So that an addition of one line to a large exchange is a very different matter in its consequences from adding one to a small exchange.

Many people say that the telephone business is the only one known in which wholesaling costs more than retailing. Not so. In telephony you get far more than twice the value in a large exchange for far less than twice the money; but it is hard to convince the public of this fact.

Digitized by Google

But the public can be taught. From an original rate of $50 the price has steadily gone up, more being charged as the service became more valuable, and at the same time more expensive, until the price to-day in Chicago is far less in proportion to the value of the service rendered than it was at the low price above named. You pay more, you get much more, and the expense has multiplied very much faster than the rates you are charged.

In the city council the other night, Alderman Lyke had an order approved by the Council, asking an estimate from the city electrician, Prof. Barrett, for an electric light plant which should illuminate the main river and its branches from Chicago avenue on the north to Twenty-Second street on the south. The accomplishment of this end will require about 100 double lamps, with dynamos, boilers, engines, etc., and at least twenty-three miles of wire. These wires will all go underground—Chicago takes her own medicine, every time—and wires above ground appear only at the switch and test boxes on the bridge viaducts. The engine, boiler and dynamo building will be placed, probably, upon the south branch, where Washington street would cross to the west side if there were any bridge. From this point there will need to be a perfect metallic circuit up and down both sides of the river and branches, so that in case of any failure of the line at any point the nearest switch to the break will be turned, and the lights on the intact portion of that circuit will burn until the necessary repairs are made. The wires will cross through the tunnels. But, the council has made no appropriation yet, so that there is no need of any premature worry on that point. By and by, when the time comes, all the companies will have a chance to bid, and chaff and wrangle over the contract, just as often happens in such cases.

CHICAGO, December 16, 1886.

LETTERS TO THE EDITOR.

Notice to Correspondents.

We do not hold ourselves responsible for the opinions of our correspondents.
Anonymous communications cannot be noticed.
The Editor respectfully requests that all communications may be drawn up as briefly and as much to the point as possible.
In order to facilitate reference, correspondents, when referring to any letter previously inserted will oblige by mentioning the serial number of such letter, and of the page on which it appears.
Sketches and drawings for illustrations should be on separate pieces of paper.
All communications should be addressed EDITOR OF THE ELECTRICIAN AND ELECTRICAL ENGINEER, 115 *Nassau Street, New York city.*

DISTRIBUTION OF ELECTRICITY BY INDUCTION COILS.

[63.]—During the year 1882, being then in Boston, Mass., I carried out a series of experiments upon the use of the induction coil for the purpose of supplying electrical energy from central stations. As a result of these experiments, I made an application to the United States patent office. The application was filed on the 29th of January, 1883, and contained a complete description of a system, in which alternating or undulating currents of high tension, generated in a central station, are used in combination with induction coils which transformed the electric energy conveyed by the mains into a number of currents of low tension and large quantity.

Various arrangements were described and shown in the drawings. The substance of this rather lengthy application may best be seen from one of its claims, which reads literally as follows:

"The combination in a system of electrical distribution of a generator adapted to produce electric currents of high E. M. F., a continuous conductor including the primaries of a series of inductoriums and forming an internal circuit for the said generator; and a series of secondary circuits, each including one or more electric lamps, and formed of the secondary circuits of the said inductoriums, whereby the high tension currents flowing in the main conductors and primaries, are enabled to develop secondary currents of low tension and great volume in the secondary circuits, substantially as and for the purpose described."

The application was rejected; and the objection of the patent office commenced as follows:

"Applicant should demonstrate more clearly to the office, the possibility of producing quantity currents from intensity currents by means of an induction coil; it is not apparent how applicant, in any case, can get more quantity from a secondary coil than he has in his primary."

I now find that a patent has been granted to Messrs. Gaulard and Gibbs, on the 26th of October, 1886, of which the first claim reads as follows:

"(1.) The hereinbefore described art or method of electrical distribution and conversion, which consists in establishing in a closed electric circuit, a current of alternate and equal positive and negative potential, producing by the influence of such current an inductive field of alternate polarity, and thereby inducing in translating devices situated in an independent closed circuit traversing such field, a similar alternating secondary current of greater quantity and less potential than the originating or producing current."

It is quite apparent that the examiner in 1886 had a different view of the function of an induction coil than was the case in 1883.

I may also mention that in my experiments at that time, I made use of a continuous iron core for the induction coil.

In the meantime I have made various improvements in regard to this system of electrical transmission, and I do not intend to relinquish my claim to priority in this matter.

I am sir, your obedient servant, ALEXANDER BERNSTEIN.

THE BERNSTEIN ELECTRIC LAMP COMPANY, Limited.
London, November 18th, 1886.

ALTERNATE CURRENT DYNAMOS.

[64]—I notice in the ELECTRICIAN AND ELECTRICAL ENGINEER, of December, an account of the Westinghouse Electric Lighting System, and mention of my alternate current dynamo. While engaged in developing some of the "modifications" of the Westinghouse system, I determined to design a constant E. M. F. dynamo of the alternating type, having from 16,000 to 20,000 reversals per minute. There seemed to be a general opinion that an alternating current dynamo with an iron-cored armature would result in failure, as the cores when subject to 16,000 reversals of polarity per minute would heat too greatly for practical use. It was found upon trial, that the iron core instead of heating from self-induction, reduced the self-induction to a practical zero. That the great number of reversals per minute did not increase the magnetic lag; and that the calculations used in determining the electrical data of direct current machines were applicable to dynamos of the alternating type.

It was also found that these machines would join in multiple arc with one another, and that they could be connected in parallel with far greater safety than the ordinary commutating dynamos. Two machines were fed into the same circuit under the following varying conditions:

1st. Two similar dynamos driven from a common shaft by belts, synchronized without difficulty when their E. M. F.'s were equal.

2nd. Two dynamos separately driven from separate engines synchronized where the E. M. F's were equal.

3d. Two dynamos driven either separately or from a common shaft synchronized at widely varying E. M. F.

4th. It was found impossible to "leave out" an armature of either dynamo if the fields of the machines were charged.

The demonstration of these points was entrusted to Mr. O. B. Shallenberger, who worked out the clear results with rare judgment and success. Unquestionably the use of iron, of very low magnetic resistance in the armature core, is a large factor in the accomplishment of the above results. It seems likely that this dynamo may form the nucleus of a distinct type of generators.

W. STANLEY, JR.

GREAT BARRINGTON, Mass., Dec. 11th, 1886.

[65]—In an editorial notice of an important paper on the predetermination of dynamo characteristics, read by Mr. Kapp, at the opening session of the Society of Telegraphic Engineers, the London *Electrical Review* says: "A fortnight ago we published a paper by M. Marcel Deprez from *Comptes Rendus* on this very subject; and although in some of his claims of priority, he is, as is not unusual, a little late in the day, the paper should receive careful attention in connection with the subject under discussion"

* * * "There is one statement in this paper of M. Deprez's to which we venture to allude, as it involves a question of priority of invention or discovery, or at any rate of application, which we are now in a position to settle, thanks to the letter of Messrs. Mather and Platt, published in our last issue. M. Deprez, in the article alluded to, says: 'I was the first to construct very thick and short electro-magnets (experiments in the depot of the Northern Railway of France in February, 1883), instead of employing electro-magnets of small diameter, long and numerous, as was done in the Edison machine which figured at the exhibition of 1881. My example has been followed with full success, and the magnetic field of the Edison machines since constructed has been considerably improved simply by decreasing the length of the electro-magnets and thickening the core.'

"We quote the passage in its entirety, because it is desirable that M. Deprez should be allowed to state his own case. We, in England, have been in the habit of connecting the improvement of the Edison dynamo with the name of Dr. Hopkinson, and, as we now know, with perfect justice. For it appears from the letter of Messrs. Mather and Platt, that as early as the autumn of 1882, Dr. Hopkinson first experimentally demonstrated the advantages of the altered form of the magnetic circuit of the Edison dynamo; that early in December of the same year he gave instructions for a dynamo on the improved lines which was constructed and tested with most satisfactory results early in January, 1883; and that machines involving the improvement were actually delivered for commercial use in the following March. Our readers will doubtless recollect that this matter was first

Digitized by Google

given public prominence by Dr. Hopkinson in a lecture at the Institution of Civil Engineers on April 5th, 1883,[1] at which time M. Deprez had not, so far as we are aware, made any announcement on the subject. We therefore see that the example which M. Deprez correctly says 'has been followed with full success' is certainly not that of M. Deprez; although we are quite willing to allow him the degree of merit to which, according to his own statement, he is fully entitled, namely, that he was only a few months behind Dr. Hopkinson in this matter. And this is no slight honor, and one with which others than M. Deprez must make shift to be satisfied."

It may not be uninteresting to your readers if I recall an incident which has considerable bearing on the above adverse, and (I think) unnecessarily harsh criticism of the distinguished French scientist.

The foundation for the 1,000 light dynamo of Mr. Edison was the first work completed before the opening of the Paris electrical exposition in 1881. It was the last thing put to its intended use. Three weeks before the close of the exposition, a long looked for cable despatch from Mr. Edison told us that, after many experimental vicissitudes, the big dynamo had left New York on a steamer of the Compagnié Transatlantiquè. It arrived duly, and I brought it safely to Paris, and we started to erect it. In the haste of the work an accident happened. One of the heavy magnet cores slipped from the hoisting tackle and fell on the sharp edge of a polar extension piece, and cut through several layers of wire of the field magnet coil surrounding it. Among the curious gazers who quickly gathered to view the scene, was M. Marcel Deprez. As the injured piece lay on the ground, he remarked to me: "It would have been easier to lift a shorter piece into position." "But not one so efficacious perhaps, Monsieur," said I "I beg pardon," said he, "a shorter piece would be better. That long leg must have consequent poles in it." This remark led to an animated discussion in which I mentioned Mr. Edison's often expressed preference for long heavy magnets, containing an excessive amount of iron. After the dynamo was in action, M. Deprez again visited us with M. Tresca, and others who were taking indicator cards of the steam engine driving the dynamo. He again referred strongly (and I thought too contemptuously) to the thin, long legs of the monster which was doing good work and exciting general wonder and admiration, and he proved to me conclusively that consequent poles were being formed. This fact being laid away in the mind of a man engaged at that time in the improvement of the dynamo machine as a means of transmitting electrical energy to a distance, it is not unnatural to suppose it did not take long to ripen into the apple of discord which has so agitated the editor of the London *Electrical Review*, and certain scientific inventors in England.

Very respectfully, OTTO A. MOSES.

P. S.—In the interest of fair play to other inventors, and in this connection, I hope you will publish a letter signed G. E. D.,* which appears in the same number of the London *Electrical Review* with the editorial above referred to on Mr. Kapp's paper.

[*See page 24.—Ed.]

LITERATURE.

CATALOGUES AND PAMPHLETS RECEIVED.

We have received, from the authors, a copy of the important paper on Dynamo-Electric Machinery, by J. Hopkinson, M. A., D. Sc., F. R. S., and E. Hopkinson, M. A., D. Sc., reprinted from the Philosophical Transactions of the Royal Society. We shall reprint this paper in full, with the illustrations and charts accompanying it. We furnish the first installment in the present number.

Massachusetts Institute of Technology. Twenty Second Annual Catalogue of the Officers and Students, with a Statement of the Courses of Instruction, and a List of the Alumni, 1886-1887.

Eighth Annual Meeting of the National Telephone Exchange Association, held at the Southern Hotel, St. Louis, Mo., September 7th, 8th and 9th, 1886.

Transactions of American Institute of Electrical Engineers, vol. iii. May 18th, 19th and June 8th, 1886.

Electrical Accumulators. A Circular of the Electrical Accumulator Co., No. 44 Broadway, New York city. This handsome pamphlet gives a brief account of the invention of the Storage Battery by Planté—and the improvement of Faure, and sets forth the readiness of the company to supply Storage Batteries "combining the invention of Faure and improvements thereon" for a wide range of uses, embracing practically all the leading applications of electricity. The circular is illustrated by a cut showing the general appearance of the standard type of cell made by the company, and designated as "15 A."

The Electrical World, 1874-1887. Under the above title Mr. W. J. Johnston, publisher, sends us an extremely neat circular. It contains a brief account of the growth and development of our enterprising contemporary from small and discouraging beginnings to its present prosperous condition. Illustrations of the present tasteful rooms occupied by the various departments of the *Electrical World* are given. Mr. Johnston and his associates are to be congratulated upon their success.

Catalogue No. 5 of the Clayton Air Compressors, Rock Drills and General Mining Machinery. Clayton Air Compressor Works, 43 Dey Street, New York.

1. *Electrical Review*, vol. xii., p. 302.

The Scranton Board of Trade, Scranton, Pa., publish a report for 1886, with the title, "Powdered Anthracite and Gas Fuel." It contains much interesting matter relating to coal and gas interests, with statistics, as well as a great variety of industrial and social information pertaining to the city of Scranton and vicinity.

ELECTRICAL NEWS AND NOTES.

REPORT ON THE EXPERIMENTS OF M. MARCEL DEPREZ RELATING TO THE TRANSMISSION OF POWER BETWEEN CREIL AND PARIS.

BY M. MAURICE LEVY.

(Concluded from page 464, vol. v.)

Calibration of the instruments of measurement and actual measurement of the resistances.—Since February last, at which date regular work was commenced, the engineers of the North of France Railway and the electricians specially attached to the experiments, executed daily the electric and dynamometric measurements necessary for the determination of the yield obtained, so that the commission found the measuring instruments all ready. Before making use of them it has been necessary to ascertain their correctness, and effect the calibration of each instrument.

This was the first operation: At Creil they had to calibrate—

(*a.*) For the mechanical measurements two dynamometers of White's system, mutually identical and serving to measure the motive work furnished by the two locomotives.

(*b.*) For the electric measurements two amperemeters, with proportional deviations on the Deprez system, intended, the one to measure the current of the rings, and the other the current of the inductors, and a potentiometer on the same system for measuring the difference of potential at the terminals of the generator.

At La Chapelle :—(*a*). From a mechanical point of view a Prony brake to measure the useful work collected.

(*b.*) From an electrical point of view the same instruments as at Creil.

The constants of the galvanometers were determined by Cornu's method, already employed in the experiments at the northern station.

The dynamometers were calibrated by means of Prony's brake.

This verification, the results of which are given in table i., showed the perfect accuracy of the measuring instruments employed, as well as of the special co-efficients of each.

The differences between the results obtained by the commission, and the mean results of the numerous observations executed daily by the engineers attached to the inquiry fall throughout within the limit of errors of observation.

The exactness of the instruments being recognized, we measured the resistances of the machines and the line, using the ordinary method with Wheatstone's bridge. The results are given in table ii.

Practical experiments in transmission.—These preliminary operations having been completed on May 24th, one party of the sub-committee went to Creil and the other party to La Chapelle to make the experiments on transmission. The results are to be found in table i. We operated by varying the speed of the generator from 168 to 218 rotations per minute; its electromotive force varied from a minimum of 4, 887 volts to a maximum of 6,290 volts

The power consumed at Creil varied (omitting fractions) from 67 to 116 h p., and that recovered at Paris from 27 to 52 h. p.

The yield increases with the power transmitted.—The industrial yield has varied from 40.78 to 44.81, or about 41 to 45 per cent. With the exception of a slight anomaly in experiment 3, it increases with the horse-power transmitted, which depends on sensibly constant losses, such as those necessitated by the magnetic fields, which are like the general outlay of the operation. They become less and less sensible as we operate on a larger scale.

Thus the most important experiment, in which we took 116 h. p. at Creil and recovered 52 at Paris, was the one which gave the greatest yield, 45 per cent. The fact that we can thus practically transmit 116 h. p. to a distance of 56 kilometres and derive an industrial yield of 45 per cent., accurately measured, not exceeding a velocity of 218 rotations of the generator, and this continuously, without straining the machines, is an extremely remarkable result which could not easily be expected and which must be emphatically pointed out.

Discussion.—It is not sufficient to establish the bare fact of a yield of 45 per cent. It is necessary to find out how the 55 per cent. of force lost was consumed. It was evidently lost, partly by the machines and partly by the line.

Work absorbed by the generator.—The work communicated to the generator was 116 h. p. The difference of the potentials at the terminals of the machine is 6,004 volts. The intensity of the current is 9.789 amperes.

The available work at the terminals of the generator is

Digitized by Google

therefore, expressed in horse-power

$$\frac{6004 \times 9.879}{75 \times g} = \frac{6004 \times 9.879}{735.66} = 80.4 \text{ h. p.}$$

The loss of work in the generator is, therefore, 116 — 80.4 = 35.6 h. p.

Work absorbed by the recipient.—The differences of the potentials at the terminals of the recipient is 5,456 volts; the strength of the current there is 9.824 amperes; the work which the recipient receives, expressed in horse-power, is therefore :—

	Horse-power.
$\frac{5456 \times 9.824}{735.66}$, or say	73.1
The useful work recovered at its exit is	52.1
Work lost by the recipient	21.0

Work absorbed by the line.—The available work having been found :—

	Horse-power.
At the terminals of the generator	80.4
At the terminals of the recipient	73.1
The work lost on the line is	7.3

But the figure obtained in this manner would not merit any confidence. In fact it results from the difference of two very large numbers. However little we may have been deceived in the observations relating to each of them the relative error committed in their difference may be of the same rank as the difference itself. This is the more true as we must remember that all the measures taken are industrial, and not measurements of precision.

It is, therefore, indispensable to determine the loss of the line directly. The loss in horse-power is the product of the resistance of the line and of the square of the mean strength of the current divided by 75 *g*.

The resistance of the line (table ii.) being 95.45 ohms and the mean current (table i.) 9.85 amperes, the work sought for is

$$\frac{97.45 \times 9.85^2}{75.\ g} = \frac{97.45 \times 97.02}{735.66} = \frac{9454.60}{735.66} = 12.7$$

in place of 7.3

found above, or a difference of 5.4

The total loss determined by the dynamometer and the brake being 116 — 52 — 64 h. p., the total loss by the machines must be 64 — 12.7 — 51.3 h. p. in place of 56.6 h. p. determined electrically.

If we share this difference between the two machines we shall arrive finally at the following figures :

	Horse-power.
Loss in generator	$\frac{35.6 \times 51.3}{56.6}$ = 32.2
Loss in recipient	$\frac{21.1 \times 51.3}{56.6}$ = 19.1
Loss in line	12.7
Total	64.0

We thus see that the loss in the line is trifling, and that the machines consume the most of the power. Hence we are led to put the question, what is the industrial value of the machines constructed by M. Deprez? To render the discussion definite, we must especially consider the machine at Creil as being the most important in dimensions and that which best answers to the present ideas of the inventor, and we shall discuss the most important experiment, that which consumed 100 h. p. at Creil.

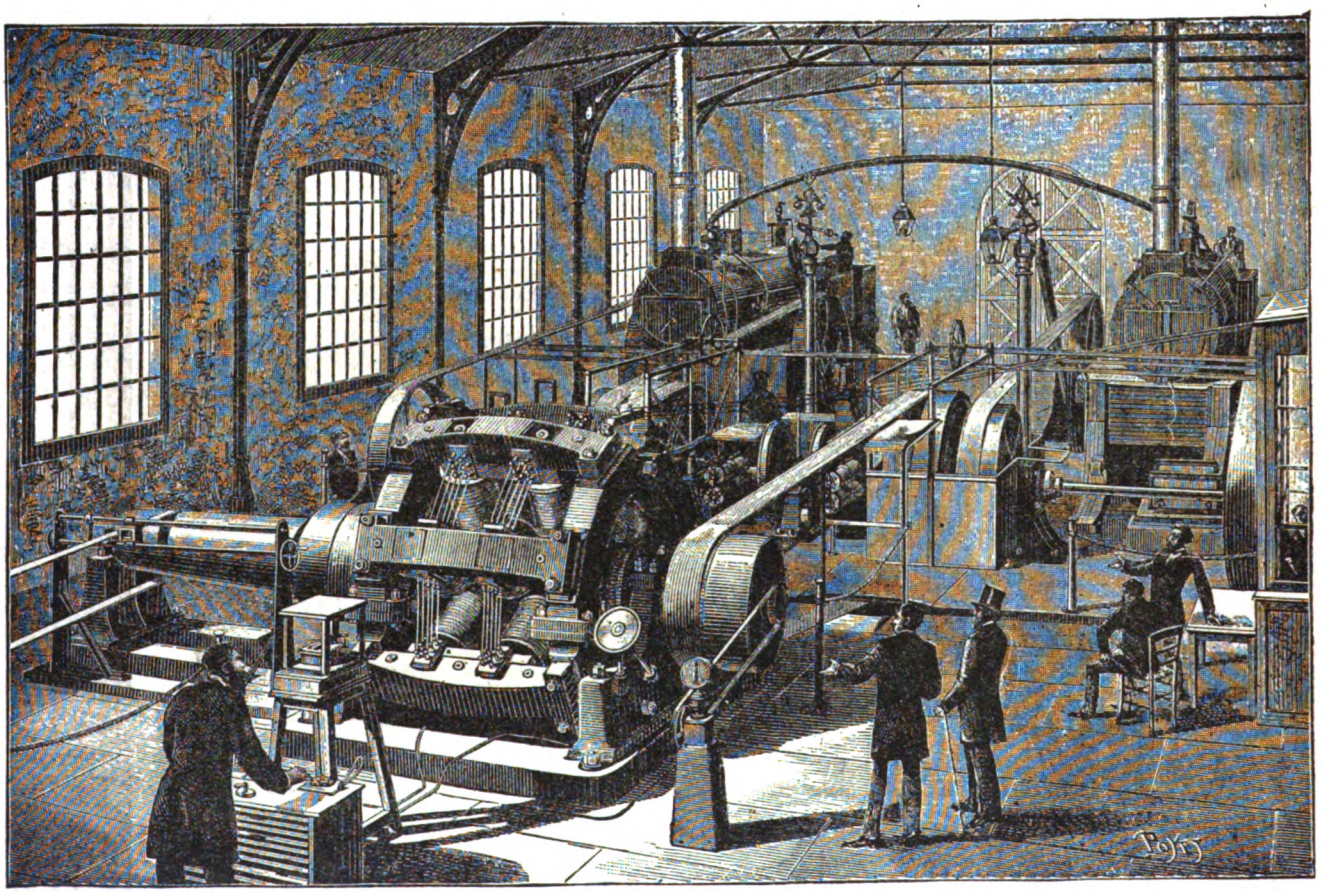

FIG. 1.—MARCEL DEPREZ'S EXPERIMENTS BETWEEN CREIL AND PARIS.—THE GENERATING APPARATUS AT CREIL.

Examination of the industrial value of the Creil machine.—Such a machine may be considered from four points of view :—

1. As regards the qualities of its inductors or of its magnetic field.
2. As to the qualities of its rings.
3. As to the qualities of the entire machine or of its industrial yield.
4. As to its mechanical qualities.

These latter qualities we have recognized by the facility of constructing and repairing the machine, its massive dimensions and the slowness of its movements. We need not return to this subject.

Economic value of its magnetic field.—If we cause a wire to move in a magnetic field of the length of 1 metre, at the rate of 1 metre per second, there arises in it an electromotive force which may serve as a measure for the intensity of the field.

It is merely requisite to multiply the number of volts which constitute this electromotive force by 10^4 to have the measure of the field in centimetre-gramme-second units.

But the intensity alone does not constitute the economic value of a magnetic field. Its volume intervenes likewise, in the magnitude of the effects which may be obtained. This volume in a

Digitized by Google

dynamo-machine is comprised between the two concentric cylinders which limit the inductors and the cores.

In the Creil machine, the distance, between the cylindric surfaces limiting the inductors and the core of the armatures is 0.06 metre. The mean circumference of the annular volume occupied by the field has a diameter of 0.74 metres. The breadth of the field of each ring, equal to the breadth of the core of the ring, is 0.40 metre. Hence the volume of the fields of the two rings is

$$v = 2 \times \pi \times 0.74 \times 0.06 \times 0.40$$

or v = 111 cubic decimetres approximately.

On the other hand, always taking the most important experiment that where 116 h. p. is consumed, the electromotive force developed by the field in the ring of the generator is 6,200 volts, the speed being 218 turns per minute.

The ring is divided into 196 sections; or one of the halves comprised between the brushes $\frac{196}{2} = 98$ sections, having each 20 metres of useful wire (50 strands of 0.40 metres in length).

The total length of useful wire is, therefore,

$$98 \times 20 = 1{,}960.$$

The mean circumference described being 0.74 metre in diameter or 2.32 metres in circumference, the surface described by the wire in a rotation of the ring is

$$1{,}960 \times 2.32 = 4{,}547 \text{ square metres, or for the two rings}$$
$$2 \times 4{,}547 = 9{,}094 \text{ square metres.}$$

As the speed is 218 turns per minute, the surface described per second is

$$\frac{9{,}094 \times 218}{60} = 33{,}041 \text{ square metres.}$$

The electromotive force being 6,290 volts, we obtain per unit of velocity

$$\frac{6{,}290}{33{,}041} = 0.190 \text{ volts.}$$

Therefore, in centimetre-gramme-second units the field is

$$H = 0.190 \times 10^4 = 1{,}900 \text{ units.}$$

Let us now value the crude force which must have been expended to obtain it. The experiments (table iii.) show that with a current of 36 amperes in the exciter, a current very close to that of 36.30 existing in the magnetic field relating to the transmission experiment which we are examining, the work observed at the dynamometer necessary to set the exciter in action has been 12.68 h. p.

Thus, in fine, the Creil generator yields a magnetic field of 1,900 units of the volume of 111 cubic decimetres by means of 12.68 h. p.

Comparison with the magnetic field of the Gramme machine (model A.)—Let us make the same calculation with the Gramme machine. To obtain a field of 1,900 to 2,000 units, there is required in this machine a current of 20 amperes traversing an inductor circuit, the resistance of which is 0.6 ohm.

The work expended is, therefore,

$$\frac{0.6 \times 20^2}{75g} = \frac{0.6 \times 20^2}{736} = 0.326 \text{ h. p.}$$

The dimensions of the field in the Gramme machine are the following:—

Annular thickness of the field,	0.01 metre.
Mean length of circumference,	0.55 "
Breadth of the iron core,	0.10 "

and hence for the volume of the field,

$$v = 0.55 \times 0.10 \times 0.01 = 0.55 \text{ square decimetres.}$$

or about $\frac{1}{200}$ of that of the Creil machine.

Therefore, to produce a field of the same strength and volume as that of Creil, 200 Gramme machines would be required.

As each of these expends 0.326 h. p., the total power required would be

$$200 \times 0.326 = 65 \text{ h. p.}$$

in place of the 12.68 h. p. consumed at Creil. Five times more power would be required.

Besides the weight of the copper in each Gramme machine of the A model is about 30 kilos., the consumption of copper, therefore, would be 6,000 kilos. in place of the 2,534 kilos. required in the Deprez machine.

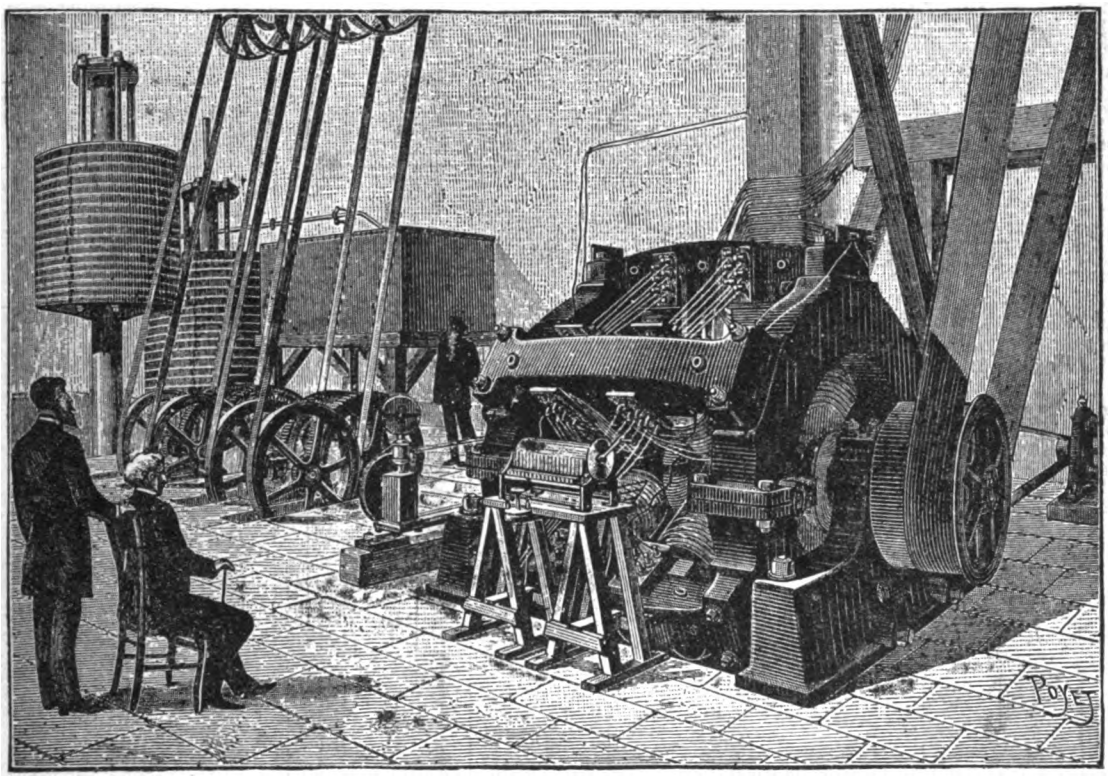

FIG 2.—MARCEL DEPREZ'S EXPERIMENTS BETWEEN CREIL AND PARIS.—THE RECEIVING APPARATUS AT LA CHAPELLE, PARIS.

We see, therefore, that as regards the creation of the magnetic field the large inductors employed by M. Deprez are exceedingly advantageous.

2. *Value of the copper rings.*—The ring of a dynamo machine is so much the more perfect as there is produced less parasitic work, *i.e.*, work other than that which may be collected at the brushes. Such is the work absorbed by Foucault currents in the iron cores and by phenomena of self-induction produced twice in each revolution in each section of the ring.

But there may be other causes of loss of work which have not been analyzed, or resulting from faults of construction in the ring.

Let us call T_i the work thus lost by known or unknown causes; T_m the crude motor work furnished and measured at the dynamometer; T_e the portion of this work devoted to the exciter; T_f that consumed by passive mechanical resistances, such as the friction of the axle of the machine and of the brushes, stiffness of the driving belts, vibrations, &c.

The value of the work really supplied to the ring is

$$T - T_e - T_f - T_i.$$

But this work, as we know, is equal to the product of the

Digitized by Google

electromotive force and the current divided by 75 g or $\frac{E\,I}{75\,g}$.

We have then in strictness

$$T_m - T_e - T_f - T' = \frac{E\,I}{75\,g}$$

whence

$$\frac{\frac{E\,I}{75\,g}}{T_m - T_e - T_f} = I - \frac{T'}{T_m - T_e - T_f}.$$

If the ring were perfect, and if none of the parasitic work designated by T_i existed, the first quantity would be unity.

The value of this first quantity, always less than unity, is that commonly called the *coefficient of transformation of the machine*, and might be more correctly named the *yield of the ring*. The ring is, indeed, so much more perfect the nearer this value approaches to unity.

Let us establish, as we have done for the magnetic field, a comparison between the ring of the Gramme machine (model A) and that of Creil.

The electromotive force of the Creil machine, expressed in horse-power, is $\frac{E\,I}{75\,g} = \frac{6{,}290 \times 9{,}879}{735.66} = 84.5$ h. p.

The motive power is

$$T_m = 116 \text{ h. p.}$$

On the other hand (table iii.) at a speed of 208 revolutions, the work absorbed by friction (open circuit) is 9.38 h. p., which for 218 revolutions will be

$$T_f = \frac{218}{208} \times 9.38 = 9.85 \text{ h. p.}$$

The work absorbed by the exciter in action (with the current of 36 amperes, which is approximately that of our experiment) is

$$T_e = 12.68 \text{ h. p.}$$

whence

$$T_m - T_e - T_f = 116 - 12.68 - 9.85 = 93.47$$

and for the co-efficient of transformation

$$\frac{84.5}{93.47} = 0.90$$

Comparison with the Gramme ring (model A)—The machine, model A, according to the experiments made at the 1881 exhibition by MM. Tresca and Poitier, gave an analogous yield.

Hence it results that the Creil ring, notwithstanding its large dimensions and the great length of wire contained in each section, and which might seem likely to increase the phenomena of self-induction in an excessive proportion, is as perfect as smaller rings.

In fine, like the production of the magnetic field, the arrangements adopted by Marcel Deprez are highly advantageous; on the other hand his ring furnishes the same yield as that of the Gramme machines (workshop model), and that with a much less velocity and great convenience for construction and repairs.

3. *Industrial yield of the Creil machine.*—After having studied each of the two parts (inducers and armature) of the Creil machine, let us take it in its totality so as to show its effective yield.

We define generally the yield of a dynamo machine by the ratio.

$$\frac{\frac{E\,I}{75\,g}}{T_m}$$

of its electric work to the motive power supplied to it. This yield, in the experiment before us, would be

$$\frac{84.5}{116} = 0.725$$

or about 0.73.

But what concerns the industrialist is not the electric work of a generating machine, but the work collected at its terminals compared with that supplied to it. The yield thus understood—the least favorable case which can be considered—is the ratio.

$$\frac{\frac{\varepsilon\,I}{75\,g}}{T_m} = \frac{6004 \times 9.879}{735.66 \times 116}$$

ε being the difference of potential at the extremities of the machine.

We obtain here 0.70, or about 30 per cent. of loss. This figure is probably excessive, since, on calculating the loss due to the line, we have seen that the losses due to the machines are, in fact, a little less than those appearing from the electric observations.

We have found that the loss of the generator is 32.2 h. p. out of 116 received, or

$$\frac{32.2}{116} = 27.7, \text{ or say 28 per cent.,}$$

which would leave a yield of 0.723, or about 72 per cent. The engineers of M. Deprez have found 73 to 74 per cent. Let us admit the maximum loss of 28 per cent.; it is distributed thus:—

Of 116 motive h. p. supplied 9.85 have been lost in friction, stiffness of driving-belts, &c., 12.68 are expended in moving the exciter; the surplus is transformed into heat upon the ring.

Hence the losses incurred at the generator may thus be summarized.

	Per cent.
1. Mechanical losses (friction, vibration, &c.),	8.5
2. Power spent in producing magnetic field,	11.0
3. Heating of the ring,	8.5
Total,	28.

Industrial yield of the machine at La Chapelle.—For a recipient the industrial yield (understood also in the least favorable sense) is the ratio of the power which it absorbs at its terminals to that which it furnishes to the brake on the axle of its ring. The numerical results of table i. indicate, in the experiment in question, that the yield thus understood is 76.5 per cent.

Industrial yield of the two machines connected.—From the dynamo-metric experiments there appears with certainty a loss of 64 h. p. And as the line absorbs 12.7 h. p., the two machines together absorb 51.3.

TABLE I.

Number.		1.		2.		3.		4.		5.	
		Creil.	Paris.	Creil.	Paris.	Creil.	Paris.	Creil.	Paris.	Creil.	Paris.
Hours		10h.20	.....	10h.30	.....	10h.40	.....	11h.00	.....	11h.10	.....
Current	Deviation of the galvanometer: K = {Creil K VI = 0.300} {Paris K V = 0.228}	22.98	30.75	25.18	33.50	27.43	36.50	30.43	40.25	32.93	44.25
	Current in amperes	6.879	6.827	7h.554	7h.437	8h.229	8h.106	9h.129	8h.936	9h.879	9h.824
Mean current		6.85		7.50		8.17		9.25		9.85	
Electromotive force	Deflection of the potentiometer: K = {Creil K IX = 164°.5} {Paris K II = 120°.3}	28.50	32.20	30.87	35.50	32.62	37.40	34.75	39.20	36.50	42.20
	Potential at terminals	4688 volts	4163 volts	4996 volts	4536 volts	5366 volts	4936 volts	5716 volts	5069 volts	6004 volts	5456 volts
	Electromotive force	4887	3902	5215	4242	5605	4527	5981	4711	6290	5061
Magnetic field.	Deviation of galvanometer: K = {Creil K VII = 1.027} {Paris K IV = 1.106}	30.25	25.00	31.00	26.50	30.25	27.50	33.50	29.00	35.25	31.00
	Current in amperes	31.07	27.65	31.84	29.31	31.07	30.42	34.40	32.07	36.80	34.29
	Electric work in h. p.	7.54	3.97	7.92	4.46	7.54	4.81	9.25	5.34	10.30	6.11
Number n turns per minute		168	244	182	257	190	267	206	278	218	295
Sum y of ordinates of dynamometer		171.5	.....	181	.....	188	.....	213	.....	228	.....
Abscisse x of dynamometer		84	.....	92	.....	99	.....	.....	.....	.....	.....
Dynamometric work at generator ($T_m = \frac{x\,y}{216}$)		.....	27.2	.....	32.8	.....	38.6	.....	44.8	.....	53
in horse-powers		66.7	.....	77.1	.....	86.1	.....	102	.....	116	.....
Charge P at brake of recipient (L = 2 m. 30. arm of lever of brake)		.....	35k	.....	40k	.....	45k	.....	50k	.....	53k
Useful mechanical work of recipient given by brake $T_b = \frac{2\,\pi\,L\,n\,P}{60 \times 75}$ in horse-powers)		.....	.....	.....	.....	.....	.....	.....	.....	.....	.....
Industrial mechanical yield		40.78		42.54		43.3		43.92		44.81	

NOTES.—A deflection of 1° of the galvanometer signifies K amperes.
A deflection of 1° of the potentiometer signifies K volts.
The formula $T_m = \frac{x\,y}{216}$ results from the calibration of the dynamometers.

Hence, it results that in any transmission of power, however trifling the distance, from the mere fact that we are obliged to employ two machines we cannot, with the speed of 200 rotations admitted at Creil, an electromotive force of about 6,290 volts and separate excitement count on a yield of more than

$$1 - \frac{51.3}{116} - \frac{64.7}{116} = 55.43 \text{ per cent.}$$

The mean yield of each of the two machines accurately observed is, therefore,

$$\sqrt{0.5543} = 74 \text{ per cent.}$$

Digitized by Google

TABLE III.

EXPERIMENTS ON THE WORKING OF THE EXCITER AND THE TRANSMISSIONS.

Position of the driving belt on the cones.	Number of turns of the transmissions per minute.	Work on the motor axle measured at the dynamometers. Number of turns of dynamometers, K_{nm}.	Total ordinates of the registers, γ_{nm}.	Band of the exciter put on. Band of the exciter let down.	Circuit open, b.	Circuit closed, a.	Work absorbed by the exciter in action, a—b.	Number of turns per minute of the generator for and the large cone.	Number of turns per minute of small cone. Theoretical.	Number of turns per minute of small cone. Experimental.	Number of turns per minute. Theoretical.	Number of turns per minute. Experimental.	Exciter. Work furnished by the magnetic field of the generator $c = \frac{\pi}{75}\frac{I}{g}$. Number of divisions of galvanometer, n.	Strength of current, $I = n K$.	Resistances of the conductors of the generator, R.	C.	Observations.
				h. p.	h. p.	h. p.	h. p.						d	A	w	h. p.	
1	52	78	16.5	6.85	6.54	18.10	11.56	156	170.5	170	1002	972	81.25	32.2	7	9.86	$K = 1.03$ (coefficient of the galvanometer). Cones connected by bands so as to vary the speed of the exciter. *1st series of experiments.* Pulley of 200 millimetres fixed on shaft of the exciter.
1	52.9	78.5	18					157.5	172.2	172	1002	951					
1	52.1	78.2	80	6.98	7.04			157	172	172							
2	52.5	79	66	6.59	7.64	24.14	17.10	156	200	196	1155	1116	87.5	88.6	7	14.2	
2	51.2	77	18.2					155	236	237							
3	52.1	78.2	90.3	6.92	8.54	34.08	26.54	158	240	236	1576	1841	46	47.4	7	21.8	
3	51.6	77.5	19.8					154	334	339							
3	52.1	78.5	28.5					155	336	330	1925	1920					
1	67.5	101	17.5	8.17	8.49	16.06	7.57	204	224	224	870	868	87.25	88.1	7	7.5	*2nd series of experiments.* Pulley of 300 millimetres fixed on shaft of exciter.
1	68	102	18					204	224	224	868	868					
2	68	102	34	8.38	9.38	22.06	12.68	205	224.5	224	1190	1185	85	86	7	12.8	
2	69.2	104	19.5					206	267.5	267	1070	1052					
3	68.2	102.5	46.5					205	283.5	260	1010	1010					
3	68	102	18	8.50	9.88	29.26	19.67	203	307	307	1190	1185	42	43.8	7	17.8	
3	67.5	101	20.5					203	307	306	1185	1163					
1	67.5	101	62.5	14.65				204	308	305							
1	100	151	21.05					206	335	334							*3rd series of experiments.*

which is sensibly comformable to the result obtained for each of them.

From the yield of 0.5543, or in round numbers 55 per cent. furnished by the two machines connected, it is necessary to deduct in each case the work lost on the line.

Conclusions.—1. We may now affirm the possibility of transmitting with a single generator and a single recipient to a distance of 56 kilometres an industrially utilizable force of about 52 h. p. with a yield of 45 per cent. without exceeding a current of 10 amperes, an angular speed of 216 revolutions per minute or a circumferential speed of 7½ metres per second.

If we take account of the power absorbed by the dynamometers and other instruments of measurement, by the driving bands and the appliances arranged with the view of facilitating the experiments or of ascertaining the best proportions to be adopted for the organs of transmission, all matters which would not exist in industrial applications, we may say from the present that in practice the yield will be very close upon 50 per cent.

Of the loss of 55 per cent. the two machines with their exciters have absorbed about 45 per cent., and the line about 10 per cent.

In any case the line will absorb more or less according as a thicker or thinner wire is employed.

If we have abundance of cheap power at command and consequently do not attach much importance to the yield, we employ a thin wire which will render the installation more economical, but will absorb more power.

If, on the contrary, the power at disposal is limited, and it is requisite to draw from it the greatest possible advantage, economy in the first outlay must be sacrificed by adopting a thick wire. Here is an ordinary problem for the engineer to solve, according to the circumstances of each case.

2. The working of the machines is now exceedingly satisfactory, both as regards regularity and continuance.

Since February they have been worked for a mean of five hours daily, and up to nine hours without serious heating, burning the wires or producing sparks at the brushes.

3. The speed of the generator when consuming 116 h. p. is only 216 turns per minute and that of the recipient 295 turns. These are industrial speeds with which we could scarcely expect to produce so great effects, and it is a striking sight to see a dynamo moving so slowly and yet so powerful, that at each rotation of its rings mechanical power of 1,000 to 1,200 kilogrammetres becomes industrially available at the distance of 56 kilometres.

4. The maximum electromotive force is 6,290 volts.

The danger resulting from the employment of such potentials is one of the principal objections which are urged against these experiments as regards their application to ordinary practice.

We believe that this is a prejudice which should not be allowed to become established.

The experiments at Creil have lasted for more than six months; it is the first time that the persons employed have had to manage such potentials and yet we have not had the slightest accident to deplore; which proves that with due precautions the dangers may be overcome.

Besides, all human industries, without exception, are full of dangers, especially in their commencement.

As they are developed the danger declines, though without ever disappearing. There are always junctures where fatality will triumph over human foresight. These sad moments man accepts as episodes without influence upon the main result of his struggle against natural forces.

The catastrophes which, in spite of the improvements adopted, still meet us in the two greatest industries of the world—in railways and in navigation—hinder no one from profiting by their benefits.

It will be the same for the transmission of power if it gives the results which we are now permitted to hope.

5. Another fear inspired by the use of high potentials, springs from the losses of electricity, which they may facilitate on the way.

Experiment, which alone can here decide, has not justified these fears which theory rendered admissible.

In all weathers the resistance of the line has remained approximately constant at equal temperatures, and the difference of the currents of Creil and of La Chapelle has always been very slight. This may be judged by the figures in table i.

6. If we admit a velocity of 300 turns in place of 200, which appears quite feasible, and which in the conviction of M. Deprez can be widely realized, we may, without even increasing the electromotive force, gain considerably in the yield simply by diminishing the resistance of the rings.

M. Deprez thus hopes to exceed the yield of 50 per cent. which he announced at first.

The more decidedly will this be the case if we agree to increase the electromotive force, which can be done without augmenting the weight of copper of the machines and without altering their speed. M. Deprez regards such a result as realizable. But on this experiment has not yet decided.

7. As regards the wire, the commission considers that it may be left bare for its entire length except at its entrance into and its exit from the workshops, provided that it is everywhere conveyed out of reach of the hand and at a distance of at least three-quarters to one metre from telegraph or telephone wires, so that

Digitized by Google

whatever wind may prevail, it cannot be entangled with them nor produce upon them any effect of induction.

8. The cost of an installation of transmission cannot, of course, be founded upon the expenditure incurred in the experiments where everything had to be created. The commission has nevertheless obtained information on the transmission of 50 h. p. between Paris and Creil from data furnished by these experiments.

It appears that the price may be fixed thus :

	Francs.
Generator machine,	50,000
Recipient machine,	30,000
Line 56 kilometres, estimated at 800 francs per kilometre going and returning,	44,800
	124,800

This price has been given as a simple indication. M. Deprez considers that it will be signally diminished in consequence of the regular manufacture of the machines, as also by important improvements which he calculates on introducing, taking into account the instruction derived from the present experiments.

9. From a scientific point of view these experiments seem to reduce to nothing, or to a mere trifle, the effects of self-induction which seemed likely to result from the sudden changes of polarity produced twice per revolution as each wire passes by the brushes. They show, also, that with careful construction Foucault currents may be avoided, even in the largest machines.

Lastly, they confirm the laws of electro-dynamic induction far beyond the limits reached in former experiments.

I add that the report of the commission concludes with these words: "The commission, in the name of science and industry, warmly congratulates M. Marcel Deprez on the admirable results which he has obtained. It expresses its gratitude to MM. de Rothschild for the exhaustless generosity with which they have supported this gigantic experiment."

TABLE II.

MEASUREMENTS MADE BY THE COMMISSION OF INVESTIGATION.

Resistances.

Generator	Rings	29.00	ohms.
	Inductors	5.75	"
Recipient	Rings	88.18	"
	Inductors	3.82	"
Line		97.45	"
Exciter at Creil (ring and inductors in series)		1.26	"

Exciter at La Chapelle.—It has a double wrapping on the inductors: one of thick wire in the circuit formed by the ring and inductors in the circuit formed by the recipient, and one of fine wire in derivation.

Ring	0.28	ohms.
Wrapping of thcik wire	0.12	"
Wrapping of fine wire	27.81	"

After this report had been read, M. Deprez thanked his colleagues, MM. J. Bertrand, E. Becquerel, and A. Cornu, for the active part they have taken in the researches of which M. Lévy had just given so clear and thorough an analysis.

He took, also, the occasion of expressing his obligations to his coadjutors M. Sarcia, the engineer charged with the construction of the machines, and the direction of the station at Creil; M. Geraldy, engineer of bridges and highways, who was charged with the direction of the station at Paris; M. Minet, charged with the graduation and the control of the instruments for electric measurement; MM. Duché and Clémenceau who superintend the measurements and the inspection of the machines.

He also expressed his gratitude to MM. de Rothschild, without whose generous assistance so extensive an experiment could never have been made.—*Comptes Rendus.*

AMERICAN INSTITUTE OF ELECTRICAL ENGINEERS.
SPECIAL MEETING AND DINNER.

The second dinner and special meeting of the season was held at Cable's restaurant, No. 130 Broadway, New York city, December 7. In the absence of Mr. F. L. Pope, president of the institute, Capt. O. E. Michaelis, was voted chairman. After an hour and a half of social enjoyment, including a very good dinner, the chairman called the meeting to order, promising an intellectual treat in the paper of the evening, by Mr. T. Commerford Martin. Mr. Martin then read his paper, the subject of which was "Electric Street Cars" [see p. 15]. When Mr. Martin had finished reading, Capt. Michaelis said:

Gentlemen: I am sure that we have all listened with great pleasure and profit to Mr. Martin's exceedingly interesting, simple and lucid paper, and I now declare the subject open for discussion. In connection with that I desire to say that under the rules of our society we should be very happy indeed to hear from any of our guests here this evening who are not members.

Mr. Murray Mitchell—Although I only came in at the end of the dinner, I have been extremely interested, and have listened with great attention to everything that was said by Mr. Martin, and I have only risen for the purpose of corroborating what he has said in relation to the Baltimore road and also to direct your attention, and I think perhaps also his, to the fact that in the comparison shown in his report between horse-power and electricity, the comparison of $6.50 to $4 is not as advantageous to electricity as it should be; because the average speed which is accomplished there with electricity is eight miles an hour, and the speed which they formerly had was only four miles an hour; which of course reduces the cost in comparison—so that the cost of electricity should be put at about $2 as against $6.50 instead of $4 as against $6.50. That I know has not been brought out by Mr. Martin's report directly, but I think it worthy of attention.

I should also like to state that as counsel for the Safety Electric Railway and Power Co., which operates under the Daft patents, I had the pleasure some two months ago of closing a contract in Pittsburg for the equipment there of a railroad to be two and a half miles in length, where the grade is 14 per cent. going up one of those terrible Pittsburg hills. We first thought of equipping it without any safety device, relying merely upon the traction attained by electricity and the weight of the motor; but as there happened to be a curve with a 50 foot radius on the grade of some 700 feet to the mile at that point, and as this happened to be on an elevated structure, something like our elevated roads, and as the danger, if there should be any slip of any kind in going around that curve would be very great and would result probably in great loss of life, we thought it better to adopt a system which Mr. Daft himself examined and approved of, using a species of cog rail but doing away with the old form of cog. It answers the same purpose without having the disadvantages and expense of the old system. That road I think will be fully equipped by the latter part of March, and probably be running at that time. We have there the underground conduit, which is being constructed by Mr. Wharton, of Philadelphia. He has built a great many cable roads. We have there a very strong form of conduit, it being formed of slot rails, seven inches in height and supported by ties and also by chairs, which are made very heavy and were almost strong enough to hold firmly the slot rails without any other support. This road also has the overhead system, making a combination of the two which has not previously been tried in this country; and I hope that at the time that that road does run I may have the good fortune to see many of the gentlemen present out there, and have the pleasure of taking them on the first ride.

Mr. Wetzler—Mr. Martin has remarked in his paper that one of the principal points to be considered was the coal bill. It is interesting, therefore, to note that in the Julien Electric Railway at Hamburg, a calculation has recently been made on the basis of 1,600 kilometres run: that is, equivalent to about 1,000 miles. Mr. Huber, the engineer there calculates that for the 1,000 miles run the power required to propel the cars one kilometre is, on the average, three-fourths of a horse-power an hour. Now, that figures out in this way. If it takes three-quarters of a horse-power an hour to propel a car one kilometre, and assuming that three pounds of coal per horse-power per hour is what a fair average engine will do, then the coal required to propel the car one mile would be three and a half pounds of coal per mile. Now, take, for instance, the Third avenue road in New York; on a basis of three and a half pounds of coal required to propel a car a mile, we would have, assuming there were 300 cars—I think Mr. Martin puts it at 360—say there are 60 extra cars, which are either summer cars, or cars laid off for repairs—that would give 175 pounds of coal per car per day. I am basing that on a run of 50 miles of car per day. That would give 52,500 pounds of coal a day, or 26¼ tons. Calculating a ton at three dollars we should have for the coal bill alone per day only $78.75—and that is with accumulators.

The Chairman—Gentlemen, we have present a number of distinguished men, well known in connection with the subject that we are studying, and I am going to take the liberty of calling upon some of them. First, I will call upon a distinguished foreign gentleman who is with us, whose name has been specially mentioned, as familiar to us all, Mr. Julien, and we would be glad to hear him speak on the subject. There is one of our members present who would be very glad indeed to interpret what he may say, in case he will favor us.

Mr. Julien was warmly received and addressed the meeting in French. Mr. Mailloux translated the remarks of Mr. Julien to the meeting, as follows:

Mr. Julien expresses his thanks and his great gratitude for the honor conferred upon him, and wishes to say that as Mr. Martin has entirely covered the points in his paper, it is scarcely necessary for him to elaborate them further, and that he could only speak of personal matters if he were to attempt to discuss the subject, which he thought might perhaps not seem acceptable. Upon assurance that that would not be the case he continues. The circumstances under which the tests were made at Antwerp were such that they represented an almost inimical feeling to the

Digitized by Google

question of electrical traction by any process whatever. During the six months that the tests lasted, every detail of the system was subjected to the closest scrutiny; the accumulator cells were sealed, and they were kept almost under lock and key; he was scarcely allowed himself to look at them. The tests were made by judges, the most competent engineers and electricians, and they were made with every precaution that might be necessary to prevent any tampering with the regular order of procedure, and there was a feeling which was quite current in general engineering circles, and also on the part of electricians, that there was not much reliance to be placed upon electrical traction, particularly by accumulators, that even electricians themselves were in such an infantile state of evolution that it might be well enough to wait until they had grown a little farther, and as to accumulators it would be well enough not to think of them for some time.

Referring to the statement made by Mr. Martin, and the assertion made by Mr. Wetzler, that the cost of energy necessary for electrical traction is three-fourths of a horse-power per kilometre, and as the energy required for the lamps must also be counted in, say 10 cents a day, the total expense of about three dollars would be necessary for the energy actually needed, and counting an expense of two additional dollars for all other costs of maintenance and wear and tear and interest and various other expenditures, we would arrive at the cost of five dollars which has been mentioned by Mr. Martin. The cost was thus found by the experiments made at Antwerp, and that cost might be considered so to speak historical; it might be conceded to be the cost on which we could safely calculate the probable expenditure of running the electrical car.

Desiring to submit the system of electrical traction to the electricians of Paris and to a committee, and to exhibit it there, and let it be tested in order that the figures and statements as to its value might be corroborated and also that the facts as they have been found at Antwerp might be known more generally, a test was arranged for there.

Much opposition was encountered; the French electricians had been preaching against and disparaging the accumulator. Perhaps they had had too much of Mr. Philipart in times past. That may have had something to do with their disgust. At any rate a jury comprising some of the most able electricians was selected. Our endeavor was to place ourselves under exactly identical conditions with the system of electrical traction that was exhibited by the firm of Siemens at the electrical exhibition of 1881, and to make a comparison with that on the score of cost, facility of running and various other conditions; and although the jury comprised men of conservative inclination and disposition like Messrs. Fontaine, Hospitalier, and others, men very well known in connection with the application of electric motors, and although Mr. Fontaine himself took charge of the accumulators and did not let us have anything to do with the manipulation, a despatch was received this very morning stating that the jury at Paris had conceded every point that had been made with them, and that they had found the figures representing the cost at Antwerp, had not even been reached. The actual estimate of cost of running under the conditions at Paris were much more favorable than those arrived at in Antwerp.

The experiment had been going on since last July with two cars; there were two cars in continual operation so that the test could be made very thoroughly, and the expense arrived at very correctly.

Translating the conclusion of Mr. Julien's remarks, Mr. Mailloux said:—Well, gentlemen, I have managed to get along so far pretty well, but I doubt very much, as good a friend as I am of the English language—it is my native language—and as much as I think of the good old Saxon, I doubt if it is adequate to express the very eloquent and beautiful peroration Mr. Julien has just given us; but I will make a feeble attempt. His idea is briefly that he does not wish to occupy your time any longer by talking himself. He does not think it is well for people to say too much of themselves. He thinks he has already taxed your patience and he merely wishes to say that he would be very happy to demonstrate the facts and theory and the system which he is interested in to the satisfaction of all those here present, and that he will consider himself happy if in coming among electricians of an intelligence so developed and of a genius for invention so skilled and so well known as that of America, he has succeeded in contributing one stone to the great edifice of science, particularly in respect to the subject of electrical traction.

I must not forget to mention a significant thing, namely, that Mr. Julien has received two diplomas of honor, one for the car and one for the method of accumulators.

The Chairman—I see present a gentleman well known to all in connection with the subject, whom we desire to call upon—Mr. Van Depoele.

Mr. Van Depoele—Well, gentlemen, I think you know about as much about it as I do. Everything has been stated this evening and I can simply corroborate. Still, there is one little plant that I might give the exact cost of, for the cost is the main thing in the whole business here. We ran a plant in Minneapolis, Minnesota. This is I believe the largest electric railroad ever run in this country or anywhere else so far as I know. We have there about a 60 h. p. motor, and the train consists very often of 90 tons weight, or 91 tons. We have run it for about nine months. I might state also that they have tried a soda motor there, which we will tell about later. But at all events we have been running there at an expense of about 3,000 pounds of coal a day—that is, starting in work at six o'clock A. M. and running till half-past eleven P. M.—and certainly any of the locomotives that used to do the work before consumed as much as four tons of coal a day for the same work, which shows that although we have to transform our power twice, that still we will make a great economy over the ordinary steam engine. Our system is not now running, for the simple reason that some other parties persuaded the authorities there that they were going to bring there for them to use something wonderful in the shape of a soda motor—a soda fountain with a stick in it, or something of that kind! The soda motors came and we went off the track and let them on. But, let me say, those soda motors can hardly pull themselves, and at present are lying there like a lot of old scrap iron in the shops of the railroad. Of course the authorities there would not at the present time like to take back the electric motors for fear of stultifying themselves. But we ran very practically over that route using only very common apparatus. The whole thing was only a common freight car with four ordinary 36 inch wheels, and an ordinary gearing from the motor to the countershaft and from the countershaft to the axle of the wheels of the common car, wearing out only one belt in all that time, and working 18 hours a day, carrying 47 of their regular railroad trains a day. So it was shown that electricity can be used for heavy work as well as for light work.

Another instance where we might give figures—of course all this figuring will come much easier after we have big plants running—is this. We are now putting up a big plant in Montgomery, Alabama, where we have twelve cars running, and when it is all finished we will be able to give the exact cost of running, but so far as we have tried it—and the grades are six and a half and eight per cent. there—in fact there is not a foot of level ground in Montgomery—with two cars we have consumed an average of 1900 pounds of coal a day, so that it costs about five and a half or six dollars a day with the two cars with the engineer's wages. That is a very small plant, and if small plants can do as well as that, larger plants can do much better.

Mr. Julien made some further remarks in French, which were translated by Mr. Mailloux as follows:—

Mr. Julien wishes to ask the privilege of speaking to say that he was ignorant of the fact that a fellow countryman of his Mons. Van Depoele, was amongst us, because he said he would have felt it incumbent upon him to begin by paying tribute to the work of an electrical engineer whose genius he admires greatly.

Mr. Mailloux—Mr. Chairman, I am interested in electrical railway matters just as I am in other branches of electrical engineering such as once in a while come under the province of an expert and have to be investigated. At the same time, while I am watching its development, I like to look at things from a practical point of view. There is a question which is now agitating the minds of practical engineers, and which gives me the opportunity to ask Mr. Van Depoele a question. It is this: There is a great deal of doubt, a great deal of difference of opinion, as to the manner in which the energy shall be applied to the shaft of the motive wheel—the driving wheels. I heard Mr. Van Depoele say that he gears his motor to a countershaft, and that he conveys the motive power from that countershaft to the driving wheel by means of a link belt. Now that link belt is, I understand some to say, a bugbear of the electric railway, or one of them, and I would like to ask Mr. Van Depoele about the length of time that that link belt has been running; also about how much of velocity it will stand safely; that is to say, how many feet per minute will it run without making too much noise or without being strained unduly, and also how long the link belt will last under those conditions?

Mr. Van Depoele—I will be very glad to answer this question, gentlemen. We have some link belts running now for the last eight or nine months on street cars. We have tried several different modes of transmission—to give directly to the axle of the car something which will obviate the vibrations transmitted by the axles running directly over the road. There at once we have a flexible connection between the motor and the driving wheel. The motor can stand on the same body as the car itself, and, consequently, does not participate in the heavy vibrations to which it would be subjected if it were carried directly by the axles of the wheels. Consequently, with street cars that is about the best connection I can find at present. I would like to be understood that any ordinary link belting in the market would not answer the purpose. We have a link belt which we made for the purpose of our business. We have tried the cast-iron link belt and found that to make considerable noise, and to wear out too fast, and not capable of running at a high speed. I have run at thirty miles an hour. I did not formerly believe that a link belt could do the work, but it seems when it is solid and correctly made you can run it at that speed without hurting it. The link belt used

Digitized by Google

by us consists of two side pieces of steel, pressed, and the steel brushing pieces are then fastened to a steel thimble at the upper end. Right through that steel thimble goes a pin. That pin catches the two lower ends of the next link, and consequently there is no friction in the small parts, but the friction is taken by the larger surface of the thimble. Right over the thimble is a steel roller. There is really no wear to the chain. We have had in Windsor, Canada, a chain running there for about eight months, and in fact it is just as good to-day as when first put down. Of course, for running fast we have certainly to use another method.

Mr. Mailloux—At what rate was the belt running?

Mr. Van Depoele—The belt was running then at about the rate, I should judge, of one-third less than that of the wheels.

Mr. Mailloux—Twenty miles an hour?

Mr. Van Depoele—Fully 20 miles an hour; and at the end of the track I stopped to feel whether the belt was hot, and it was not warm at all. Of course, for heavy work and fast speed, I think the link belt would not be suitable. Then you want to have a direct mode of connecting. Certainly, it is very difficult to get a good connection between the motor and the axles of the wheels, because, to make a motor large enough to connect directly with the axles of the wheels without any gearing, the motor has to be made too big. I think it would be out of the question to make it that way for ordinary speeds and bring it within certain limits. But to gear back, of course you have to use some kind of gearing. Friction gear I do not take much stock in. It is not reliable: it wears out, and there is always some trouble about it. Of course, the cog gear is positive, but it makes too much noise. But if you put up gear that is solid and mathematically true, and with good lubrication, I find there is not much noise when the gear is entirely covered up, like the gear we have in Scranton, which you cannot hear. It is boxed well, and works well, and fits tightly; although how long it will last of course we do not know. We have several of them running and they run well. If you gear back at one to eight you will have a good deal of noise; one to four you will have hardly any noise; one to eight there will be big wear; one to ten of course worse. There is a kind of medium between those, and you will have to take your choice in making your proportions; but the link belt, I believe, is the best thing for the street cars to-day, that is, a belt made specially for the purpose.

Mr. Mansfield—Mr. President and gentlemen: I think one of my years should mind the old saying that my father used to hurl at my innocent head whenever I attempted to say anything, to wit, that little boys should be seen and not heard. There are so many older heads and so many more experienced heads in regard to the mechanical and electrical problems, that I feel that I could not say much that would be beneficial. But I certainly would strengthen Mr. Van Depoele's remark that it is a most difficult and exceedingly troublesome thing to find any good method of connection between the motor and the driving wheels. He has spoken of a variety of methods of doing it, and there are other varieties yet of which he has not spoken. He said that the link belt gave a flexible connection between the motor and the driving shaft—that is an excellent plan, and probably would be necessary where you needed a flexible connection. But I would like to bring up just this one point, and that is, that we have before us two distinct fields to labor in. One field is to equip the 20,000 cars already now in this country, running over some 3,000 or 4,000 miles of track, and being drawn by some 125,000 horses, and with the system of construction which now prevails. The street railroad men, of all men, I believe, are hunting not only for a means of propelling their cars, but also they are hunting for a better mode of constructing their railroads. Now, with the present variety of construction of a large majority of the street railroads of this country you would need your flexible connection, and possibly leather belts; perhaps the link belts; possibly a good combination of gears can be arrived at to get this flexible connection. But the other field is the field of new construction, and this field is the field in which I think the electricians should specially labor. They should start now, and not wait five or ten years, but educate the railroad profession, the street railroad men and the street railroad builders,—the street car builders, and show them that their cars and that the street railroads must be built for electric motors. And if then they are built for the electric motors, we can supply them with something which is perfection, which will entirely do away with a great many evils which exist of course with horses, and with every other means of drawing and propelling the cars, even to the cable. The cable has a limited field—it can not operate branches successfully. But with electric propulsion in view in the construction of new roads, there is, owing to the marvelous flexibility of electrical application to street roads, no known difficulty that electric motors and the application of electricity cannot successfully eradicate and overcome. So, I close with this simple thought that if the electric street railroad men and the profession engaged in that work will impress upon the minds of all men interested in street railroads, that their roads in future must be constructed from the very word "go" for the application of electric motors, no matter by what system, but by the application of electricity—then I think, and by that means only, will we come to the general and successful application of electric motors to every street railroad throughout the country.

Mr. Mailloux—There are two points which I wish to dwell upon in what Mr. Mansfield said. I would begin by the last. He speaks of the correct, or evolutionary, method of developing electric railroads as that in which the electrician anticipates all that now hinders and warps him in the development of his problem, by beginning from the very first, from the outset, to prepare the road for electricity. That is a conclusion that has already been arrived at in reference to electric lighting. You will find that in new buildings, the latest large houses, factories, &c., we do not need longer to resort to the laborious process of drawing wires through, or taking them up to the ceiling; but we anticipate by preparing for any system of electric lighting, putting in wires inside of the ceiling during the construction of buildings, instead of having to run them outside afterwards. I wished Mr. Mansfield had permitted himself to go more fully into the subject. He has been intimately engaged in the study of electric railroading for at least four years past, and I do not think there is anybody here who is better posted in regard to the intricate details and complications of the problem than he; and I have heard him particularly speak of that very question of transmitting power from the motor shaft to the driving shaft, and he has made some very pertinent remarks in another meeting before another institute on that subject, and I think it would conduce to the general information of us all if he would briefly review what he said then so that it may come in print with the rest of it. I have reference particularly to the methods he spoke of in connection with round belting.

Mr. Mansfield—Mr. President and gentlemen—I must confess that I am considerably abashed at this method of treatment of Mr. Mailloux, and I did not come prepared to make any remarks at all, but simply to gather in all the points and all the morsels of information which I felt would be distributed and lavished upon all those here with a free hand this evening. On the occasion referred to—at the American Institute, a meeting of the electrical section—I simply gave an illustration by means of diagrams and very casual remarks of the different methods which had been used as far as I was familiar with them; and I can only repeat, if you desire, what I said of the methods presented then; but I do not wish to discuss the efficacy of any single one of them. I mentioned then that the most primal and perfect method obviously would be the application of the armature to the driving shaft direct. That does away with all gearing. That method has been utilized by Mr. Daft in the Enos elevated system. That system has two driving wheels, and the armature shafts extend on each side of the driving wheels, and the armatures are keyed directly on the shafts, and, of course, the periphery of the driving wheel is small. It is figured for a certain speed, twelve to fifteen miles an hour. Of course, the main difficulty which I think there is in using this direct connection, is simply a constructional one as to the electric motor. The ordinary horse-car wheel, if I remember rightly, makes only some 60 or 80 revolutions a minute to accomplish the ordinary speed which is used upon the tramways. Now then, to construct a motor or an armature to go at that slow rate of revolution and develop any power, you would have to go to just the extreme which Mr. Van Depoele mentions, and thus construct a pretty large motor. There is next a simple pinion upon the armature shaft; that running in a large gear which is keyed upon the driving shaft. That method is simple, but it has its objections. Yet, if the mechanical details are properly carried out and well proportioned, I think that a very successful application can be made, even up to as high a ratio as eight to one, or ten to one, in the gearing. That is the application used on the Baltimore road. Worm gear can be used, which is equally as simple as a pinion with a gear; but it is not so economical. The action of a worm in a gear is, we have always been told, a very brilliant method of losing power—that as high as 30, 40, 50, and even 60 per cent of power is lost, due to the friction of the worm within the gear; although Mr. Reckenzaun, I believe, states that he has constructed a worm of a very high pitch and has constructed his gear to match, and that he gets a very low loss, 15 or 20 per cent, if I remember rightly—running in oil. Now, we go from these simple methods to another which introduces one more element, and that is a countershaft. We can drive from a pinion upon the armature shaft to a gear upon the countershaft and then again from a small gear out of that upon a driving axle. Of course, any little gradient or any little difficulties which were apparent would be increased in this case by the introduction of another gear. The noise can be cut down by using leather belting, round, flat or angular; or link belts can be used. These would take the rapid revolutions of the armature shaft and carry them to the countershaft with very little loss and with not much noise, and with very little wear. The flexibility of this system would be between the armature shaft and the countershaft. Of course, there can be modifications of these plans, and I believe that I noticed in the *Electrical World* a description of one used by an inventor out west in which he used a train of gears very similar to the gears that are on lathes in ordinary machine shops. That

Digitized by Google

is Professor Henry, I believe. Now, that, I believe, is the perfection of complication. I have briefly mentioned the various ways with which I am familiar that have been in practical operation. There is one other which I perhaps should mention, a direct running with no intermediate gearing—I ought to have mentioned it first—and that has been brought out by Mr. Stephen Field lately—using a crank shaft on the end of an armature shaft, which is attached to a connecting rod. That certainly does away with all intermediate gearing, and if he can successfully cut down the speed of his armature to apply it to a street car, with all the street car difficulties of going so exceedingly slow—for example, a mule with two tons behind him and a very cross-grained disposition in front, on the track ahead of you—if you can cut it down to that slow rate of speed, of course for tramways there could not be anything much better. But for lighter suburban ways, where you have got the right of way and where you want to run at a rapid rate of speed, where you want to connect two places, one of business and one of residence, where the business man who has been laboring for five, six or seven hours a day at his office and wants to get home at the rate of two miles a minute to see his family and to get something to eat—of course then the direct application is superb.

The Chairman—I believe I voice the general desire in calling upon Mr. Field.

Mr. Field—As to Mr. Mansfield's remarks—much obliged for the compliment—there are two ways to apply the speed of armature necessary. One is to confine yourself to the ordinary two pole machine; the other is to increase the number of poles of that machine. That I have accomplished and with only two brushes. Then again, with regard to the conduits for city traffic, I propose, in introducing a street railroad on a line already established—you know all the rails are laid on a sleeper—to go along and take that out bodily and put in its place a hollow cast-iron girder, the top of which is capped with a steel rail and a flange carried underneath, so that you cannot get a horse's heel into it, but you can have your little carrier in there. Mr. Martin said that such a method involved carrying very high potentials. I propose to carry one or more high potentials, but at the same time have the minimum strain on the insulators, that is, the insulating medium. To accomplish that I establish a power station at each end of the line—running two insulated conductors, one carrying a positive potential and the other a negative potential. You will observe that from these parallel conductors every car will get the same difference of potential wherever it may be on the line. By that means I can carry as high as a thousand volts; and you have got to have that with a great number of cars and moderate size conductors. There is no other way to do it that I can see. Then for very large motors I wish to call your attention to a little improvement. You know how the things will spark unreasonably. I find that the spark is not governed by anything particularly. It seems to vary with the load and with the machine, and with the man that works it. I thought I would let the spark govern itself. I put a couple of extra brushes on the commutator at points of normally equal potential and connect them with a motor called the brush governor. As long as the regular brushes are at the proper point no current will pass from these extra brushes. Let the regular brushes get ever so little out, and immediately the current commences to go through the brush governor and thus turn the brushes to neutrality. The result has been very satisfactory.

Mr. Pendleton—Mr. President and gentlemen—I felt to-night that I as a visitor might occupy the position referred to by an eminent member of a whist club that I belonged to, when he said that the gallery should always be silent..

I am very much gratified at meeting here so many gentlemen I am acquainted with by name more than in person, and gratified also in having heard from Mr. Martin the excellent address which he has given us. But in that address he took occasion to say that those who spoke well of the accumulator had been often looked upon as knaves or fools. As the accumulator and its uses had formed the main subject of my investigations in electricity I felt that, although thoroughly consistent for the last five years in the matter, we had now arrived at a time when we could boldly face electricians and the public with the service and the good service that the accumulator was capable of. It is now some two years since its value in connection with electric traction came to my attention. I have appreciated and understood the remarks of our distinguished guest, Mr. Julien, to-night, a gentleman whose name was thoroughly familiar to me as the associate of Mr. Camille A. Faure, and whose intelligent work in the development and the application of the accumulator to traction was appreciated by us before his arrival in this country. The demonstration that has been made so far has only been thwarted by mechanical and not electrical misfortune. I do not feel that on the subjects to-night, which have been so thoroughly canvassed, I can give you very interesting or pointed remarks. But I will say that the subject of electrical propulsion of railways is now attracting general attention, and our deliberations and the remarks made to-night will go far to instruct the railroad men of America in the fact, which we have known long since, that the electric motor is the engine best adapted for their purposes.

Mr. Mailloux—I would like to suggest to Mr. Pendleton that he tell us something about his system in connection with the accumulators, which he has brought forward and which seems to possess some features of merit, namely, the combined conduit and accumulator system.

Mr. Pendleton—The system which Mr. Mailloux has referred to is a combination of a conduit with an accumulator system for energizing the motor. On nearly all systems of electrical railway there will be a necessity for distribution of passengers at different points; and it occurred to me some time ago to study up the matter in the direction of refreshing the accumulator during service and in the direct transmission of energy from the station to the car. There is always the question of insulation and loss by resistance, which has formed a very difficult problem in many instances to solve, as we know, from results on various railways which have been established in Europe. But, by combining the two systems, convenience and elasticity will be found by taking the current directly from the dynamo where it is the most economical; and over the parts of the line where resistance comes severely into play, the accumulator would afford a means of propelling the car. To illustrate this more fully I should say that in a system where the power station does, through the conducting tracks or conductors, the double duty of actuating the motors and charging the accumulators at the same time, the accumulator itself can be made the means of governing the motor on that part of the line. When passing beyond the limit of the line where conductors exist, the chemical energy stored in the accumulator will operate the motor and at the same time be able to control it. For instance, supposing a line of twenty miles, or any other distance, a station would find difficulty, by the ordinary methods, to operate a motor located in a tram car at that distance, ten miles on each side, from the station. But taking the ordinary conditions of a line, the car would at times take 7 to 10 h. p. upon gradients or curves, while on the ordinary levels 1 or 2 h. p. would be sufficient to propel it. Now, having on the tram-car the battery of accumulators, a simple system of commutating the accumulators into different combinations of two, three and such series would enable the electromotive force—the constant electromotive force—of the line to be varied so that a certain proportion would be used at the motor and the remainder would pass into chemical energy, and by varying in that way in going up a gradient the bulk of the electromotive force would operate the motor. In a down grade the bulk of the electromotive force would pass through the accumulators, and the ordinary accumulator instead of operating the car under such circumstances thirty miles, might be made to operate the car for a day of fifteen hours, as when passing over the portion of the line having conductors the accumulators would be constantly refreshed and upon a combined proportion for the purpose the accumulators would be available almost continually without stopping. That is briefly the system which Mr. Mailloux referred to, and the only matter in addition is the mechanical device which was proposed to be placed under any horse car for the purpose of converting the cars now in existence into electrical cars which would advance the principle more rapidly than if it were required to build new cars to replace the others. For that purpose it was suggested to my mind that, keying upon the axles a split worm wheel, a motor suspended from the bottom of the car would enable a connection by worm to operate advantageously where the dust could be prevented from entering the worm and where oil could be maintained to lubricate properly the worm and the worm wheel. Therefore, keying upon the axle a split worm wheel bolted together, on the boss or hub of that wheel there was a box supporter which gave the opportunity of giving two journals, one on each side of the worm. Both of the axles so furnished—the worms were made right and left—were reversed, one operating above, the other operating below the axle. This relieved the thrust which would otherwise result, and the friction and loss of power which the wearing on the collar would entail. The difficulty hitherto in placing the motor where it would not be subject to the pounding of the track seemed to be relieved by using a flexible axle. That is, the armature shaft connecting with the shaft of the worm wheel, about seven inches on each side was a spring or double spring, so that the flexibility of that shaft would allow for the difference of the load or from the wearing of the boxes. I had occasion to show the plan at the electrical society some time ago, and I doubt whether I have the power in language to give you a clear description without the drawing. But so far, I have not had the opportunity of placing it upon a car, and although it has excited the favorable comment of those who are expert in such matters; yet no man can promise from an idea, no matter how carefully studied, that which experiment only can prove.

Captain Michaelis leaving in order to catch a train, Mr. Mailloux was called to the chair.

Mr. Mailloux (after thanking the members for calling him to the chair, and stating he doubted whether he could fill the large gap left by the departure of Captain Michaelis), said:—We have with us this evening one of the gentlemen who is interested in financiering in connection with these matters—Mr. Stiles, the treasurer of the Van Depoele company, and I have no doubt he could give us some very interesting details and statistics—tell

Digitized by Google

how much the roads are being run for, and other matters of interest.

Mr. Stiles—I presume that some one was laboring under the impression that I was an electrician, and I beg to assure you that I am not, and I know but little about electricity. Still I think if I could get the worthy president to interpret for me, I might make a tolerably fair speech. I do not think I could say anything that would be of interest to you, in the line that should be discussed here to-night. I simply know that with the Van Depoele company we are operating some six roads every day. Our road is in operation at Scranton and we would be very glad to see any of you there to examine it. I have had great faith in electricity as a motive power, and I have invested considerable money in it: and I have faith in electricians—especially Mr. Van Depoele. As I said before, I know absolutely nothing about electricity and how little I know perhaps I could illustrate by a little anecdote. A young gentleman called on me a short time ago to engage as an electrician. He gave me his card as an electrical engineer. I asked him what he knew about electricity, and he said he knew all about it. Of course that satisfied me as it would anybody that was interested in that business: and I told him that I knew there were electricians and electrical engineers but I had very grave doubts whether there was any such thing as electricity; and he attempted to convince me that there was, but failed and left me in disgust.

Gentlemen, I thank you for the honor conferred upon me in asking me to speak but I really don't think there is anything that I could interest you with.

Mr. Martin—How many miles of track are you running Mr. Stiles?

Mr. Stiles—We were figuring it up the other night, something like 30 miles I believe.

Mr. Martin—Every day?

Mr. Stiles—Every day. We have six roads and what I consider the best part of it is, they are all paid for.

Mr. Martin—How many cars?

Mr. Stiles—About 28 cars. The road that we are not now running at Minneapolis is being run by steam power. The cars were ordinary cars the same as steam cars. We put in electricity as a temporary affair, to enable the company to run their cars until they could get some ordinance to allow them to run by steam. However, they have offered to purchase the apparatus of us, but they have had some misfortunes,—and especially in the soda motor line. They were trying to operate four soda motors made by the Baldwin Locomotive Works. The last time I was there, Mr. Hill, the engineer—there were four boilers built by that gentleman—called my attention to the coal on the floor—about two bushels. He said that was the last of 30 tons they had used to charge that one motor with, and they hadn't got it to run yet. So I concluded that there was something else that they wanted.

Mr. Mitchell—I have heard about some great eastern motor at the Rhode Island Works in Providence. I understand there is a very large motor being built there, and I would be very glad personally to hear about it.

The Chairman—I can state for the information of the gentleman that I was in Providence recently for examination of that particular system, and that at that time the motor was still on paper. It hadn't got any farther. They have a motor which is capable of 50 to 75 h. p. for street traction; but they hadn't yet begun to work on the large electrical motor—that 600,000 Watts motor, I understood you to mean.

The secretary read a communication from Mr. R. M. Hunter, as follows:

Office of
THE HUNTER ELECTRIC RAILWAY CO.,
No 926 Walnut street,
Philadelphia, Dec. 6th, 1886.

RALPH W. POPE, ESQ.,
Sec'y American Institute of Electrical Engineers,

DEAR SIR:—I expect to be present at the meeting Dec. 7th, but should I not find it possible, I would request you to state to the meeting that I find the prejudice against the practicability of electrical propulsion, which was so strong several years ago, fast disappearing, and that it is now the first thought as a possible motive power. My experience, as expert for the National Cable Railway Co., has satisfied me that cable traction is doomed, and that many of the cable railways now in existence will be converted into electric roads. This inclination was in existence even in 1883 when I had a project under consideration to convert the Chicago city railway into an electric railway, and so far back as 1881, I endeavored to induce the Union railway (now the Traction Co.) of Philadelphia, to adopt electricity in place of their cable railway then building on Columbia avenue. The Cable company is inclined now to believe in the change. At the present time the Hunter Electric Railway Co., is estimating for the construction of four roads aggregating nearly 20 miles of track and 110 motors cars, located in Pennsylvania and New Jersey. It is also negotiating for the equipment of a road in Massachusetts and a sub-company for that state, and another in Pennsylvania, aggregating at least 30 miles of track. The prospect for the introduction of electricity for street car propulsion is very flattering.

Very truly,
R. M. HUNTER.

The chairman called the attention of members to the fact that some doubt had been expressed of the advisability of continuing meetings so often as once a month. The desire to go on with the monthly meetings appeared to be general among the members present, and on motion it was voted that the consideration of the subject of electric railways be continued at the next monthly meeting. The meeting then adjourned.

The following named gentlemen were present:

Capt. O. E. Michaelis, U. S. A.
R. W. Pope.
C. O. Mailloux.
G. A. Hamilton.
G. M. Phelps, Jr.
Mr. Carey.
J. M. Orford.
J. Murray Mitchell.
Sidney F. Shelbourne.
David E. Lain.
S. D. Field
E. L. French.
Schuyler I. Wheeler.
Edmond Julien.
Baron Edouard de Coters.
Pedro G. Salom.
Henry G. Morris.
Stephen D. Hatch.
Wm. Bracken.
Joseph Wetzler.
Col. Roger Jones, U. S. A.
Dr. A. R. Ledoux.
W. M. Callender.
Mr. Butterworth.
T. C. Martin.
A. A. Knudson.
J. M. Pendleton.
G. W. Mansfield.
C. E. Stump.
C. J. Van Depoele.
Mr. Stiles.

CHART SHOWING AVERAGE TOLLS AND AVERAGE COST PER MESSAGE OF THE WESTERN UNION TELEGRAPH COMPANY FOR TWENTY YEARS.

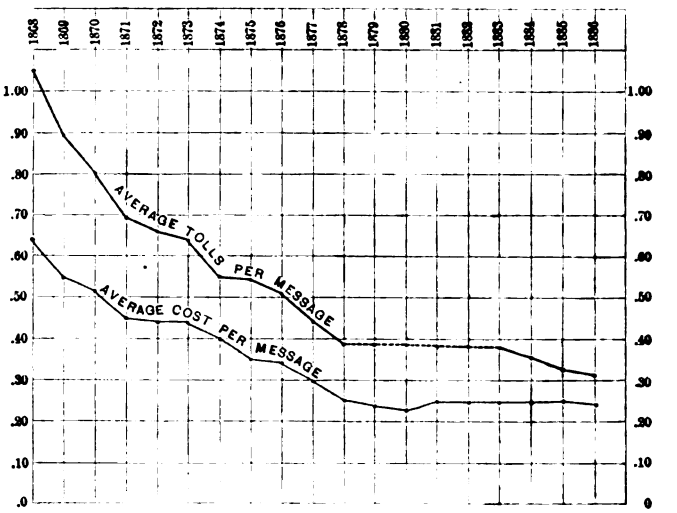

PATENT OFFICE BUSINESS, 1885-1886.

The President's message says of the United States patent department:

On the fourth of March, 1885, the current business of the patent office was, on an average, five and one-half months in arrears, and, in several divisions, more than twelve months behind. At the close of the last fiscal year such current work was but three months in arrears, and it is asserted and believed that in the next few months the delay in obtaining an examination of an application for a patent will be but nominal.

The number of applications for patents during the last fiscal year, including reissues, designs, trade-marks and labels, equals 40,678, which is considerably in excess of the number received during any preceding year.

The receipts of the patent office during the year aggregate $1,205,167.80, enabling the office to turn into the treasury a surplus revenue, over and above all expenditures, of about $163,710.30

The number of patents granted during the last fiscal year, including reissues, trade-marks, designs and labels, was, 25,619; a number also quite largely in excess of that of any preceding year.

The report of the commissioner shows the office to be in a prosperous condition, and constantly increasing in its business. No increase of force is asked for.

The amount estimated for the fiscal year ending June 30th, 1886, was $890,760. The amount estimated for the year ending June 30th, 1887, was $853,960. The amount estimated for the fiscal year ending June 30th, 1888, is $778,770.

NATIONAL ELECTRIC LIGHT ASSOCIATION.

In compliance with a call issued by chairman A. J. De Camp, the executive committee of the National Electric Light Association met Dec. 21st, at the Hotel Lafayette, Philadelphia, to make arrangements for the third annual meeting of the association.

Digitized by Google

The following gentlemen were present at the meeting; A. J. De Camp, of Philadelphia, chairman; Frank Ridlon, of Boston; Dr. Otto Moses, New York; James T. Lynch, New York; Clarence E. Stump, of the *Electrical World*, New York; Arthur Steuart, Baltimore; George W. Boyer, Philadelphia; Thomas McCoubray, Jr., and J. F. Morrison, of Baltimore.

The convention will be held either in Horticultural Hall or the Union League Annex, Philadelphia, on Tuesday, Feb. 15, next, but the headquarters will be at the Hotel Lafayette. There will be nearly three hundred delegates present, among whom will be Dr. Duncan, Prof. Rowland, Prof Thurston and Prof. Brackett.

The association was organized in Chicago in 1884, and now includes in its membership many leading electricians and the greater portion of the electric light companies in the country.

A feature of the convention will be an exhibit of electrical apparatus by the manufacturers.

THE FRENCH EXHIBITION OF 1889.

Electricity and its applications will be comprised in class 62 in the general classification of the Paris Exhibition of 1889, and will be arranged as follows: 1. The production of electricity; static electricity; batteries and general apparatus. 2. Magneto and dynamo-electrical machines; accumulators; transmission of electricity; cables and other conductors with accessories; lightning conductors; Electrometry; measuring apparatus; electrical counters. 4. Applications of electricity; telegraphy; signals; telephouy; microphony; photophony; the electric light; electric motors; electric locomotion; transmission and distribution of power; transformers. 5. Medical electricity; electro-chemistry. 6. Magnets and electro-magnets; compasses; electric clocks; miscellaneous apparatus. On the 17th of October, M. Lockroy, minister of commerce and industry, nominated a double committee to preside over this class. The first consists of forty members, and comprises such well-known names as Becquerel, Marcel Deprez, Mascart, Carpentier, Fontaine Joubert Lemonnier, Menier, Mercadier, De Meritens, Planté, Richard, Viverez, L. Weiller, etc. The second is composed of 29 members, and includes M. M. Barba, Bourgalt, Debroze, Delaunay, Duval, Farcot, Krebs, Laurens, Richard, Tissandier, etc. The first committee will preside over strictly electrical matters, and the second will take charge of machines and practical applications.

BROOKLYN SUBWAY WIRES.

The Electrical Subway Commission of Brooklyn, in its report to Mayor Whitney, says that the total length of underground conduit finished during the year is 366,000 feet, the maximum capacity of which is estimated at 7,400 miles of wire. Already 1,121 miles of wire have been drawn into the subway, and it will be brought into service as rapidly as possible. Thus far a little more than 82 miles of aerial conductors have been taken down, and the work will be extended as rapidly as possible to all the streets embraced in the proposed plan. The commission declares that the problem appears to be solved, so far as telephone and telegraph lines are concerned. This reference is made to the electric light conductors:

"The board has found no device which would with certainty, in its opinion, enable the wires carrying arc light currents to be safely and successfully operated in the same conduit with telephone and telegraph conductors without disturbance or injury to the latter. Hence the consideration of the arc light conductors must have reference to independent conduits kept at a distance from the telegraph and telephone conduits. It has been a question whether the electric light companies employed to light the streets under contract with the city could be legally obliged to place their wires underground. Recently, in view of the general public interest in the subject, the board obtained through your courtesy the opinion of the corporation counsel, which raises, however, for the consideration of the board, another question, namely, if the city authorities have made contracts at a certain price for lighting the streets, could this board properly impose upon the contractors an underground system which, though technically practicable, was financially impracticable under the terms of the contract. This would certainly bring the board into an undesirable and mischievous attitude of conflict."

Prof. Geo. W. Plympton, president of the commission, lately made an extended tour in Europe, and thus gives the result of his observations:

"The problem of construction of a telephone system on such a scale as exists in American cities with underground wires has not yet been solved abroad. In Europe no attempt has been made to solve it, because as yet there is no such general use of the telephone. The number of telephones in the United Kingdom of Great Britain reported on January last, was 13,000, while in the United States at the same date there were 327,000. There are more telephones in use in New York and Brooklyn than in all Great Britain, more in New York city alone than in all France. For the accomplishment of the ultimate object of converting our overhead electric systems of all kinds to underground systems, without impairing the efficiency of their service, without permanent injury to our streets, and without increasing the cost of the same, we must depend upon the experience gained and experiments made on our own side of the Atlantic."—*N. Y. Sun.*

NEW YORK SUBWAYS.

STATUS OF THE BIG CORPORATIONS IN THE NEW COMPANY.

The reorganization of the Subway Construction Co. is being pushed briskly forward in the interim of idleness, while the Averell company keeps its fires banked in readiness to begin work at the first return of fair weather. At the presentation of the memorial of the commission to ex-president Roswell P. Flower, Mr. Edward Lauterbach declared that over $2,000,000 had been subscribed for further subway work by men who were able to put in 500 times that amount. This was, of course, understood to refer to the Western Union Telegraph Co. and to the Metropolitan Telephone Co., and matters have thus far progressed so satisfactorily that the new board of directors will be announced early next week.

It is understood that the construction company, following out its extensive plans, has contracted for 800 miles of conduits, about 35 miles of linear combined sections; and engineer Kearney is at present preparing the routes to be begun in all directions in the early spring, the big telegraph companies giving the assistance of their engineers in the preparations.

A gentleman well on the inside declared yesterday that there were some peculiar features about the reorganization. "In reality," he said, "there will be little change in the present Construction company, but nevertheless the Western Union and the Metropolitan Telephone interests are being organized as a sort of sub-construction company, and this is the party which has contracted for 800 miles of conduit. In one sense this company is simply the creature and underling of the original Construction company, which is the only one the commission will recognize and which is now practically Mr. Edward Lauterbach. The commission and Mr. Lauterbach will still be the prime movers in the selection of routes and materials, but the 'suggestions' of this sub-company will really be carried out. The Western Union and the Metropolitan Telephone Co. will bear the expense of the construction of the conduits, and will receive in payment therefor the bonds of the Construction company."

"But where are the electric light and the smaller telegraph companies to come in?" asked the reporter.

"That is amply provided for," was the reply. "The Construction company declares that it will hold the majority of stock and that the Western Union and the Metropolitan Telephone companies will only be permitted to secure a minority. The conduits will be built of sufficient capacity for all, and the smaller companies will have an opportunity to come in according to their needs. It is only right that the routes desired by the big companies should be completed first, as they will require a majority of ducts, but we are confident that everything will work smoothly and nobody will be crowded out.—*N. Y. Sun.*

FUEL AND LIGHT.

Of the Westinghouse plan for furnishing fuel gas and electric light in union, the following points may be said to be accomplished towards the success of the scheme: 1. A system of appliances has been successfully developed for the distribution and use of gas fuel in Pittsburg and other cities in the natural gas region, and these features are no longer experimental. 2. The desirability and popularity of gas as fuel has also been proved in the same cities. 3 Electricity for operating 1,000 lamps of 100 volts each has been transmitted over No 5 copper wire to a point three miles distant, and the above number of lamps have been operated from that distance from the dynamo. It yet remains to produce and accumulate, under pressure, a water gas or other proper gas for fuel, and this is something that should be easy of accomplishment.—*Light, Heat and Power.*

ELECTRIC LIGHT AND POWER.

Domestic.

An electric light company has been organized at Greenfield, Mass., with these officers: President, J. H. Sanderson; secretary and treasurer, F. H. Hardison; directors, L. J. Gunn, N. S. Cutler, J. H. Sanderson, J. W. Stevens, S. E. Wells. The capital is to be $10,000, and has nearly all been subscribed. Nothing has yet been done toward locating the plant or deciding what system is to be adopted, but the directors will begin their work at once.

The Belvidere Gas and Electric Light Co., Belvidere, N. J, has been incorporated. Capital stock $30,000. Edward M. Beesley, and others, incorporators.

The West Troy and Green Island Electric Light Co., limited, West Troy, N. Y., has been incorporated. Capital stock, $50,000. Thomas Knowlson, and others, incorporators.

The Canton Schuyler Electric Light Co., Canton, Ohio, has

Digitized by Google

been incorporated. Capital stock $50,000. James H. McLain, and others, incorporators.

A company is being organized at Hyde Park, Mass., to be known as the Hyde Park Electric Light and Power Co. Robert and John S. Bleakie, and others, are interested.

The Morristown Electric Light, Heat and Power Co., Morristown, N. J., has been incorporated. Capital stock, $50,000. Henry W. Pope, and others, incorporators.

The Westinghouse Electric Light, Heat and Power Co., Elizabeth, N. J., has been incorporated. Capital stock, $100,000. Henry W. Pope, and others, incorporators.

Franklin, Pa., will be lighted by electricity. F. W. Mitchell and D. C. Grant are interested.

St. Albans, Vt., will be lighted by electricity. W. T. Smith, and others, are interested.

South Framingham will be lighted by electricity. For further particulars address Willis M. Ranney, South Framingham, Mass., or S. O. Daniels, Natick, Mass.

The Electric Light and Power Co., Steubenville, Ohio, has been incorporated. Capital stock, $50,000. Charles H. Steele, and others, incorporators.

A system of electric lights will be put up in Naugatuck, Conn. For further information, address A. H. Dayton.

The Westboro Electric Light and Power Co., Portland, Me., has been incorporated. Capital stock, $25,000. President, Christopher Whitney, Westboro, Mass.

Nevada, Mo., will be lighted by electricity. John Martin can furnish particulars.

The Thomson-Houston Co. has been awarded the contract for lighting the city of Fulton, N. Y., with electricity.

The Putnam Electric Light Co., Putnam, Conn., has been incorporated. Capital stock, $12,000. Gardner L. Miller, and others, incorporators.

The Northampton Electric Light Co., Northampton, Mass., has been incorporated. Capital stock, $40,000. E. P. Copeland, and others, incorporators.

The Wellsboro Light and Heat Co., Wellsboro, Pa., has been incorporated. Capital stock, $10,000. Treasurer, J. L. Robinson.

The Clinton Gas Light Co., of Clinton, Mass., has filed a petition for permission to increase its capital to $250,000. It also desires to have its charter so amended as to enable it to furnish electric light and power to Clinton and Lancaster.

New England towns are taking a strong lead in illuminating with electricity. Biddeford, Me., has just put in a 100-light plant of the American system.

The Norwich Gas Light Co., Norwich, Conn., has purchased a controlling interest in the local electric lighting company.

The authorities of the torpedo station, Newport, R. I., are considering the matter of putting in a system of electric lighting for all the buildings.

The Union Steel Co., of Chicago, are now adding a 60-light Brush machine to their electric lighting outfit. They have for some time been using 70 lamps and two dynamos.

Foreign.

England.—Some engineers still speak of electric lighting as untrustworthy. One railway engineer recently refused to light an underground railway by this light, chiefly because of its uncertainty, but another railway engineer is not only lighting Paddington station, one of the largest in London, but he is lighting all the signals by the same means, the strongest possible proof of the reliance some men put in electric lighting, and this even with an alternating current. An underground line is just the place where gas should not be used, but the engineer of the Mersey line laid great stress on the higher cost of the electric light. When railway signals are properly lighted by electricity they may be also worked by the same means.

The London, Brighton, and South Coast Railway Co. have given an order to the Railway Electrical Contractors (limited) for a considerable extension of the system of lighting railway carriages by electricity, which has been successfully in operation on the above line for some years past.

Holland.—Negotiations are in progress between the Dutch company which holds the concession for lighting the Hague with 13,000 incandescent and arc lamps and certain leading Berlin firms for the formation of a company to undertake the electric lighting of Dutch towns in general. It is proposed to name the new company "The Netherlands Electrical and Metallurgical Company."

PERSONAL MENTION.

Messrs. Price & Steuart, counsellors and attorneys at law, Baltimore, announce their purpose to add to their practice in the courts in patent and trade-mark cases the work of soliciting American and foreign patents and trade marks.

MANUFACTURING AND TRADE NOTES.

Mr. Benjamin Blum, formerly of J. H. Bunnell & Co., and Mr. Benjamin Sturges, late secretary of the Manhattan Electric Co., have formed a partnership under the firm name of Sturges & Blum. They propose to do a general electrical business, making a specialty of putting in electric bells, burglar alarms, etc.

INVENTORS' RECORD.

Prepared expressly for THE ELECTRICIAN AND ELECTRICAL ENGINEER, *by* Pope & Edgecomb, *Solicitors of Patents for Electrical Inventions, 11 Wall Street, New York city.*

CLASSIFIED LIST OF UNITED STATES ELECTRICAL PATENTS.

From November 23d to December 14th, 1886 (inclusive).

Alarms and Signals:—*Automatic Electrical Signal-Coupler*, J. S. Copers, 352,990. *Thermostat*, G. Westinghouse, Jr., 353,186, November 23; R. L. Gulon, 354,131, December 14. *Window-Spring for Electric Burglar Alarms*, T. H. Parker and J. Geary, 353,269. *Striker for Electric Bells*, C. A. Tucker and W. H. Markland, 353,273. *Electric Bell*, C. A. Tucker and O. H. Huebel, 353,274, November 23. *Fire Alarm Signal Box*, J. Ashworth, 353,475, November 30. *Electric Annunciator*, G. E. Painter, 354,209. *Electrical Number Indicator*, W. J. Cull and C. F. Scattergood, 354,505. *Indicator for Reservoirs*, S. Fraleigh, 354,508, December 14.

Clocks:—*Electric Clock for Transmitting Signals*, J. S. Bailey, 353,840, December 7. *Circuit-Breaker for Electric Clocks*, V. Himmer, 354,525, December 14.

Conductors, Insulators, Supports and Systems:—*Insulator*, R. G. Brown, 353,120, November 23. *Composition of Matter for Insulating Electric Conductors*, C. J. Van Depoele, 353,653. *Angle-Hanger for Acoustic or Mechanical Telephones*, M. Gerst, 353,489, November 30. *Conductor for Mechanical Telephones*, J. S. Jones, 353,683 and 353,684, December 7. *Distributing Appliance for Electric Lighting Systems*, E. W. Rice, Jr., 354,233. *Apparatus for Electrical Distribution*, M. M. M. Slattery, 354,258. *Apparatus for the Distribution of Electricity by Means of Secondary Batteries*, E. Thomson, 354,272. *Underground Electrical Conduit*, B. Williams, 354,290. *Insulating Joint*, D. Williamson, 354,291. *Electrical Conductor*, E. H. Johnson, 354,320. *Conduit, for Cable or Electrical Railways*, E. Samuel, 354,350, December 14.

Dynamos and Motors:—*Dynamo-Electric Machine*, R. M. Mather, 353,151, November 23; N. S. Keith, 353,310; C. Coerper, 353,414, November 30. *Brush-Holder for Dynamo-Electric Machines*, A. Schmid, 353,164. *Regulator for Dynamo-Electric Machines, Motors, &c.*, E. Thomson, 353,180. *Regulator for Electric Currents*, same, 353,179, November 23. *Regulator for Dynamo-Electric Machines*, E. A. Sperry, 353,986, and 353,988. *Electric Regulator*, same, 353,990. *Annular Armature for Dynamo-Electric Machines*, same, 353,989, December 7. *Regulator for Dynamo-Electric Machines*, E. Thomson, 354,273. *Armature for Dynamo-Electric Machines*, D. Williamson, 354,292, December 14. *Mode of Connecting and Disconnecting Generators for Electric Lighting*, J. W. Howell, 353,035, November 23. *Automatic Circuit-Controller for Electro-Plating Machines*, C. J. Van Depoele, 353,334, November 30. *Electric Motor for Sewing Machines*, E. Recordon, 353,003, November 23. *Electric Motor*, E. A. Sperry, 353,987, December 7; N. H. Edgerton, 354,111, December 14. *Governor for Electric Motors*, A. W. Meston, 353,367, November 30.

Galvanic Batteries:—*Electric Battery*, J. A. Kendall, 353,141, November 23. *Voltaic Battery*, A. F. W. Partz, 353,757, December 7. *Primary Galvanic Battery*, C. E. O'Keenan, 354,434, December 14.

Ignition:—*Dynamo-Electric Igniting Machine*, J. H. Smith, 353,827, Dec. 7.

Lamps and Appurtenances:—*Incandescent Electric Lamp*, A. L. Reinmann, 353,158, November 23; C. J. Van Depoele, 353,333, November 30; T. A. Edison, 353,783, December 7. *Electric Arc Light*, G. C. Pyle, 353,643, November 30. *Application of Secondary Batteries to Electric Lighting*, E. R. Knowles, 353,142, November 23. *Regulator for Electric Arc Lamp*, H. Henneberg and R. O. Lorenz, 353,305, November 30. *Manufacture of Carbon Conductors*, T. A. Edison, 354,310, December 14.

Miscellaneous:—*Electric Elevator*, J. H. Clark, 353,128. *Electric Switch Board*, J. W. Wehrle, 353,184. *Electric Door Opener*, A. Lungen, 353,263, November 23. *Electric Therapeutic Instrument*, C. E. Baldwin, 353,346. *Electrical Appliance for Dental Chairs*, L. J. Deckard, 353,403. *Electric Circuit Controller*, W. Stanley, Jr., 353,603. *Carbon for Electrical Purposes*, E. Shaw, 353,598. *Electrical Apparatus for Working Valves*, H. Likly, C. A. Carpenter and F. B. Graves, 353,637. *Electric Current Indicator*, M. Waddell, 353,649, November 30. *Electrical Testing*, C. S. Bradley, 353,915. *Automatic Fire-Extinguishing Apparatus*, A. Thompson and R. O. Ritchie, 353,766. *Coupling for Electrical Conductors*, W. F. Smith, 353,984, December 7. *Resistance Block for Electric Circuits*, M. M. M. Slattery, 354,257. *Induction Coil*, E. Thomson, 354,274. *Electric Cut-Out*, C. Eschwei, 354,466, December 14.

Railways and Appliances:—*Electric Locomotive*, C. J. Van Depoele, 353,335, November 30. *Electrical Propulsion of Vehicles*, F. J. Sprague, 353,829. *Electro-Magnetic Car-Brake*, H. S. Park, 353,880, December 7. *Alarm for Railway Trains*, G. E. Carpenter and A. F. Tucker, 354,302. *Railway Signal*, T. D. Williams and G. M. Eitemiller, 353,393, November 30; G. D. Burton, 354,460, December 14. *Railway Telegraph*, E. B. Ives, 353,789, December 7. *Electric Lighting of Railway Trains*, C. E. Buell, 353,248, November 23 and 353,349, November 30. *System of Lighting Cars by Electricity*, J. H. Marshall, 353,797, December 7.

Secondary Batteries:—*Secondary Battery Element*, C. Sorley, 353,511, November 30. *Secondary Battery*, V. Sass and K. Friederich, 354,352, December 14.

Telegraphs:—*Multiple Telegraphy*, S. D. Field, 353,128, November 23. *Autographic Telegraph*, J. H. Robertson, 353,592, 353,593 and 353,594, November 30. *Printing Telegraph Instrument*, A. Wirsching, 354,001, December 7. *Electro-Phonetic Telegraph Sounder*, H. A. House and H. A. House, Jr., 354,139, December 14. *Electric Telegraph*, E. A. Comper, 353,541. *Electric Telegraph Relay*, J. I. Conklin, Jr., 353,288, November 30. *Telegraph Transmitter*, J. W. Shryock, 353,715, December 7.

Telephones, Systems and Apparatus:—*Telephone Transmitter*, W. Burnley, 353,536, November 30; J. W. McDonough, 353,694, December 7; A. W. Rose, 354,241, December 14. *Telephone Receiver*, J. C. Eichmeyer, 354,402, December 14. *Microphone*, T. Wallace and O. A. En Holm, 353,337, November 30. *Telephone*, N. F. Palmer, 353,755, December 7; W. J. Morton, 354,169, December 14. *Individual Call Apparatus*, L. S. Glover, 352,948, November 23. *Switching Apparatus and Test Circuit for Telephone Exchanges*, J. J. Carty, 353,350, November 30. *Telephone Apparatus for Divers*, H. V. Hayes, 353,940, December 7. *Adjustable Support for Telephones*, C. C. Gould, 354,469 December 14.

Digitized by Google

THE ELECTRICIAN
AND
ELECTRICAL ENGINEER.

Conducted by F. L. POPE. G. M. PHELPS, JR., R. W. POPE, } Associate Editors.

PUBLISHED MONTHLY BY

THE ELECTRICAL PUBLISHING CO.,

115 Nassau Street, New York City.

European Agent, F. H. WEBB, 4, The Sanctuary, Westminster, London, S.W., Eng.

TERMS OF SUBSCRIPTION.

United States and Canada, - - - - - -	per annum,	$3.00
Four or more Copies, in Clubs (each) - - - - -	"	2.50
One Copy, Four Months, - - - - - - -		1.00
Great Britain and other Foreign Countries within the Postal Union	"	4.00
Single Copies, - - - - - - - - - - -		.25

[*Entered at the Post Office at New York, N. Y., as second class mail matter.*]

EDITORIAL ANNOUNCEMENTS.

Addresses.—*Business letters should be addressed and drafts, checks and post-office orders made payable to the order of the* ELECTRICAL PUBLISHING CO. *Communications for the attention of the editors should be addressed,* EDITOR OF THE ELECTRICIAN AND ELECTRICAL ENGINEER, 115 *Nassau Street, New York city.*

Communications *suitable for our columns will be welcomed from any quarter. Discussions of subjects relating to all branches of electro-technical work, by persons practically acquainted with them, are especially desired. Unavailable and rejected manuscripts will be returned only when accompanied by the necessary postage.*

Advertisements.—*We can entertain no proposition to publish anything for pay, or in consideration of advertising patronage, except in our advertising columns. Our editorial columns will express our own opinions only, and we shall present in other columns only such matter as we consider of interest or value to our readers*

NEW YORK, FEBRUARY, 1887.

ANNOUNCEMENT TO SUBSCRIBERS.

WE are pleased to recognize the fact that a principal source of the growth of our subscription list is the favorable commendation of the ELECTRICIAN AND ELECTRICAL ENGINEER by those who are already subscribers, to their friends and acquaintances

We shall continue our endeavors to deserve your appreciation and good-will, by keeping up, and if possible improving the quality of our paper. To any of our present readers who may find it in their way to increase our list, we offer rates for 1887 as follows:

For your own subscription	and	1	new name	.....		$5 00
" " "	"	2	"	.....		7 00
" " "	"	3	"	.....		9 00
" " "	"	4	"	.....		10 00

This offer will hold good until April 1st.

The *Telegraphic Journal and Electrical Review*, London, will be supplied for one year in conjunction with the ELECTRICIAN AND ELECTRICAL ENGINEER for the additional sum of $4.00 with any subscription.

In addition to the usual methods prescribed for making remittances, money orders issued by the American, United States or Wells Fargo express companies will be found safe, cheap, and convenient.

Very respectfully yours,

ELECTRICAL PUBLISHING CO.,
115 Nassau St., New York.

THE FIRE RISK IN ELECTRIC LIGHTING.

TWO recent fires, one destroying the Temple Theatre at Philadelphia, the other causing considerable damage to the building occupied in part by the central staiton of the Rhode Island Electric Light Co. at Providence, have drawn general attention again to the question of the danger of fire from electric lighting. It has afforded a theme for letters and editorials in the daily press, of varying degrees of accuracy as to facts and deductions from them.

Loss of life at the Philadelphia fire necessitated a coroner's inquest. The theatre was lighted by incandescent lamps of the Edison company's system. The verdict rendered included the following finding on the origin of the fire "We find that there was no evidence of other cause of fire save electricity; that the fire was not due to incendiarism; that without proper workmanship, care and conditions, it is possible to cause fire by means of incandescent light currents of low potentiality in many ways." The jury appended to its finding an expression of its "obligations to inspector McDevitt, of the insurance patrol, for his skillful experiments, proving conclusively—*First:* that incandescent lamps will set fire to inflammable substances when the heat in them is confined and allowed to accumulate, and that the lamps need not break in order to do this; *Second:* that the breaking of an incandescent lamp will set fire to inflammable gases; *Third:* that the breaking of an incandescent lamp does not ordinarily set fire to solids, even if quite inflammable; *Fourth:* that water or moistened wood will short-circuit incandescent circuits and cause fire in so doing; *Fifth:* that loose joints, unsoldered, are dangerous and liable to cause fire; *Sixth:* that the wearing away of insulation on flexible leaders will cause fire unless safety plugs are used; *Seventh:* that a careful system of safety plugs for all parts of a circuit, thorough insulation for all parts of a circuit, soldered joints, and care not to place lamps so that heat can accumulate, are first requisites in a safe system of incandescent lighting." The jury also found "that the wiring adjacent to inflammable canvas and curtains in the Temple theatre was found to be so imperfectly done as to be dangerous. The origin of the fire in the Musee department of the theatre was the incandescent light current. While we think it our duty to state the possible causes of fire by means of electric light circuits, we believe the risk to be controllable, and a minimum in case of workmanship by reliable companies."

We believe that the destruction of the Temple theatre is the first case of a disastrous fire of which the origin has been traced to an electric light circuit. The fires hitherto attributable to this cause have been comparatively trifling, having for the most part been promptly discovered and extinguished before much damage ensued.

In view of the facts developed by the testimony in the coroner's inquest, the assignment of the electric light circuit as the cause of the Philadelphia Temple theatre fire seems reasonable enough. The fire started in a booth about eight by twelve feet in size, with canvas partitions, lighted by an incandescent lamp, hung by a flexible conductor. Wm. F. Connor, the electrician of the theatre, testified that the flexible conductor was in contact with the drapery of the booth. Specimens of the electric light wires, taken

Digitized by Google

from the circuit near the lower tier of booths, were shown; the twisted and unsoldered joints of which were declared by Mr. Johnson, president of the Edison company, to be examples of defective and dangerous work of the worst sort.

The examination, before the jury, of electrician Connors indicated very clearly that the wiring of the building had been largely intrusted to incompetent hands. He admitted that he did not know what the real condition of the wire joints was. He also testified that the lamp in the booth was hung within eight inches of a rolling curtain. The experiments of Inspector McDevitt, illustrating the dangers of too small conductors, of inadequate insulation, of placing wires in close proximity to each other on supports subject to gathering moisture, of the ignition of inflammable gases by the bursting of lamp globes, and finally showing the possibility of burning a cloth wrapped around and enclosing a lamp globe, will not surprise instructed electricians. The last contingency of the above series is one which has probably received much less attention from electric light men than any of the others. It has naturally been regarded as very remote, and it is so in fact. That the little heat radiated from an electric light bulb will, if closely confined and permitted to accumulate for a sufficient time, ignite a combustible fabric, is not to be doubted. Practically, however, such a condition could hardly arise without deliberate preparation or the grossest carelessness. If a man will hang his overcoat upon an incandescent lamp, he need not be surprised to find a hole scorched through it.

The precise manner in which the fire at the theatre was started by the electric light circuit has not been ascertained. That it was due to a defect in the wiring or flexible conductor in the booth, seems more probable than that it arose from confining the heat of the lamp.

The investigation of the circumstances of the fire at the electric light station at Providence, has shown quite conclusively that it was caused by an explosion of gas, generated by the burning of soft coal under the boilers. A thorough expert inspection of the electric light machinery and of the wiring in the building, disclosed no defect, nor any indication that they had any part in causing the fire. The nature and location of the damage were precisely such as would arise from an explosion of a light gas; the damage was found upon or near the ceilings; very combustible materials near the floors were unharmed. The situation of the boiler room, its opening into the ground floor of the building, the openings through the floors from story to story, the use of soft coal, begun the night before the fire, the probability that the fire had been banked a short time before the fire occurred, and finally, the terrible burning of fireman O'Brien, in connection with his words "it was the boilers," are circumstances that permit no doubt as to the origin of the fire. Electric lighting may be conceded as absolved from any responsibility for the Providence fire.

Not so, however, as to the Philadelphia fire. Yet, it is undoubtedly true that electric lighting is far safer than any other mode of illumination. Like other good causes it sometimes suffers at the hands of its injudicious friends. It has been a mistake of some advocate to assert the entire absence of fire risk in electric lighting *per se*. It has been the mistake of some constructors of electric light plants to act, apparently, as if this were true, and to disregard, as to plans, materials, and workmanship, the precautions which will practically nullify the elements of danger. The frank language of president Johnson, of the Edison company, on this point, before the coroner's jury at Philadelphia, is to be commended.

It is fully within the knowledge of insurance managers as well as of electricians, that, while the large quantity of physical energy employed in an electric light plant is capable of inflicting damage or destruction upon both life and property, the methods and means of absolutely controlling it, confining it to its proper channels and work, are definitely ascertained and capable of application in all cases; that the flow of the electric current may be, and is, made as harmless as the flow of water, through houses and streets. A chief point in the superior safety of electric lighting lies in the fact that, unlike gas, oil or other illuminants, it does not supply the material of combustion, or fuel for a fire.

The clear lesson from the Philadelphia fire is that both constructors and purchasers of electric lighting outfits must see to it that every part of the work be intrusted to competent hands, that in plan, material, and execution, it be up to the level of the present well-known and simple provisions for safety.

THE DEATH OF THREE PROMINENT MEN.

Professor Edward L. Youmans died, at his residence in this city, January 18th, at the untimely age of 65 years. Few men, if any, have done so much as he for the popularization of scientific knowledge and literature in this country, or, indeed, in all English-speaking countries.

Born at Coeymans, N. Y., on the banks of the Hudson, June 3, 1821, he removed with his parents, while still a child, to Saratoga. At the age of thirteen he was attacked by a disease of the eyes, and was totally blind for several years. He manifested at an early period the fondness for chemistry and physics, which gave direction to the pursuits of his whole life. During the period of his blindness he was able to go on with his studies through the devoted assistance of his sister, Anne Eliza Youmans, who read and experimented for him. He contrived for himself a machine with which he did his writing. He never fully recovered the use of his eyes, and, throughout his life, was often unable to read. For about forty years, Prof. Youmans was associated with enterprises of the Appletons' publishing house. While visiting their bookstore, forty years ago, whither he had been led by his sister in pursuit of scientific books, he entered into conversation with W. H. Appleton, who was quickly interested in him. As a result, his widely-known "Class-Book of Chemistry" was published by the Appletons in 1852.

Prof. Youmans placed a lasting obligation upon the reading public in 1864, by the publication of his book on the "Correlation of Forces"—a compilation, with an introduction—which placed within the grasp of the general reader the generalizations of science upon the various forms of energy, and their relations to each other. Doubtless, many of our readers will recall the effect of this book upon their minds, as presenting a conception of the unity of

Digitized by Google

physical research, with the bonds of correlation and equivalence that underlie all manifestations of energy. Prof. Youmans further popularized the doctrines of the conservation of energy and the correlation of forces by extensive lecturing. Two notable lectures were on the "Chemistry of the Sunbeam" and the "Dynamics of Life."

In 1871 he planned the International Scientific Series, to be published in New York, London, Paris, and Leipsic, the arrangement being afterward extended to St. Petersburg and Milan. The project was based on the idea of paying authors from the sales in all countries. Up to the present time 57 volumes of the series have been issued. In 1872 he established the *Popular Science Monthly*.

Prof. Youmans graduated in medicine at the University of Vermont, but never entered practice as a physician. He derived his title of Professor from having accepted the Chair of Chemistry in Antioch College in 1866.

Prof. Youmans maintained an intimate friendship with Herbert Spencer, and Profs. Huxley and Tyndall, whose works he has done so much to make popular in this country. He remained till the end of his life the adviser of the Appletons in matters relating to their scientific publications. All lovers of science, and friends of popular education in clear and accurate knowledge of the world of nature, have reason to lament the loss of one so conspicuously and efficiently devoted to those ends as Prof. Youmans.

* * *

It is safe to say that no American manufacturer has been brought more prominently into public notice for some years past than Mr. John Roach, the veteran shipbuilder, who breathed his last on the 10th of January, in this city. Mr. Roach was born in Ireland in 1813. He came to America at the age of sixteen. He earned his first dollar in a brick-yard in New Jersey; from which humble start, his thrift, energy, and force of character brought him, after years of toil, into the foremost ranks of manufacturers, and made him the leading shipbuilder of America. Having early learned the trade of an iron-founder, he accumulated savings enough to start a small foundry, employing four men at first. This foundry proved the nucleus around which he built up his complete works for building marine engines and iron ships. As a shipbuilder he took and kept the lead. He did not achieve his success without encountering much of difficulty and disappointment, against which he measured his energy and perseverance with undaunted courage at all times.

Mr. Roach acquired the hearty good-will of his employés through his justness and kindness to them, and won a position of high esteem in the business world by his ability and integrity.

* * *

Gen. William B. Hazen, Chief Signal Officer U. S. A., died at his home in Washington, January 16th. Since 1855, when he graduated at West Point, Gen. Hazen had been in the military service. In common with most army officers, he passed several years in frontier service. Disabled by wounds in Texas, he obtained leave of absence in 1859. In February, 1861, he returned to duty, being appointed Assistant Instructor in Infantry Tactics at West Point. In October of the same year, he entered active service as Colonel of the Forty-first Ohio Volunteers. He continued in service to the end of the war of the rebellion, rising to the rank of Major-General of Volunteers, and Brevet Major-General U. S. A. Soon after the close of the war, he was commissioned Colonel of Infantry in the regular army. Till his appointment to the Signal Office in 1880, with the rank of Brigadier-General, his time was spent in a variety of military duties, at home and abroad, during which he found opportunity to develop a talent for authorship, writing and publishing books on the "School and Army in France and Germany," and the "Barren Lands in the Interior of the United States."

The inclusion of the Weather Bureau in the department of the Chief Signal Officer, involving the operation of telegraph lines, brought Gen. Hazen into close relations with telegraphers and electricians. His administration of the Signal Office was characterized by the activity and aggressiveness native to his temperament. He kept up and advanced the range and efficiency of the service. Gen. Hazen will be greatly missed in social circles in Washington, where he enjoyed much consideration.

FARRAGO.

A FRENCH JOKE.

L'Ingenieur Électricien of December 23 thus discourses:

"A fondness for neologism sometimes impels one to the ludicrous. *The Electrician* of London, in an article on Arago, after stating that France claims for him a large part in the discovery of the principles upon which the idea of the telegraph was shown to be practicable, and after being constrained to say, in justice, that this claim is somewhat doubtful, desires fully to concede that Arago's name is properly connected with our experimental knowledge of the induction phenomena associated with the name of Foucault, of which the explanation was afterwards given by Faraday.

"It, therefore, deigns to accord to us that Arago has probably a right to priority in the discovery of the phenomena of induction; but, as the English journal finds the claims of Faraday as valid as those of Arago for giving his name to the phenomena called Foucault currents, it proposes the suppression of Foucault and—new Solomon—to cut in two the names of the English and French physicists, and, in all seriousness, suggests the fantastic name of Farrago, which has set all France to laughing. Farrago is a word implying absurdity, being a synonym for mass or mess, for a medley of confused, disparate things, a boiled dinner, balderdash. Farrago to represent Faraday and Arago! If the inventor of the brilliant idea of coining Farrago ever learns that the physicist Lette had determined the laws of resistance at the same time as Ohm, doubtless the philological English *Electrician* will be willing that Ohm's law shall thenceforth be called the law of Ohmlette! Ohmlette, Farrago, pile it on.

'Risum teneatis Amici.'"

Shall we laugh less, or more, on referring to the article referred to in the *Electrician* (Dec. 17), and finding that the suggestion of "Farrago" was merely a piece of English "chaff," and that the "avec un sérieux dogmatique" was all on the part of our French contemporary?

People interested in various schemes for underground lines in New York, may take heart from Judge Van Hoesen's decision against the application of the Subway Commission to enjoin the New York Underground Telegraph Company.

In our note at foot of page 3, January number, we seem to have been afflicted with a momentary attack of *aphasia* in writing "Prof. Thurston" for *Prof. Houston*, who, as our readers know, was the Electrician of the Philadelphia Electrical Exhibition of 1884. The error was ours, and not Mr. Hering's.

Digitized by Google

ARTICLES.

THE ELECTRICAL EXHIBITION AND PURE RESEARCH.[1]

BY M. B. SNYDER,

Professor of Astronomy, Central High School, Philadelphia.

WHEN requested to develop before the Institute, some topic relative to the late electrical exhibition, it occurred to me that there was at least one line of reflection it were well to insist on, before the memory of that brilliant display should fade too deeply. There were those who had reported upon the uses and peculiarities of the special exhibits. There had been full account taken, as well, of the praiseworthy inventive and mechanical skill displayed, as of the immediate practical bearing of the several inventions. There had even been attempted practical tests which should haply add to the commercial recognition and credit of the inventor.

But what should be said if, in our exhibition, we failed to recognize anything more than the genius which presides over mechanisms and patented devices; if, through thoughtlessness or neglect, we ignored that great body of unregistered exhibitors who, by their researches alone, had given silent though effective tribute. It seemed to me that even America, with all its worship of the immediately practical, and with all its bold faith in hap-hazard progress, could well afford, as for a moment it cast a last look upon its first great electro-technical exhibition, to do homage to those far-seeing minds, who in this field had made invention possible and progress a necessity.

I propose, then, that the thread of our reflections shall be the dependence of the electrical exhibition upon pure research. And to prevent misapprehension, I desire that the words "pure research" should be understood to imply that class of scientific work which means investigation for the sake of the beauty of truth and fact, though the applications and the mercenary rewards be never so remote; that holds the advancement of the borders of knowledge under the impulse of an unmeasured faith in the eventual advantage to be its highest, noblest aim. It should, however, not be inferred that antagonism to the so-called "practical science" is intended, except in so far as that name is a cloak for empiricism. Indeed, it would be folly at this stage in the history of any science to moot a distinction between the workers in theory and the workers in application, seeing that it is now well understood that the very highest efforts in each field are only attainable by a just recognition of the claims of the other. We know well that one theory may comprehend a thousand applications, and that one appliance may demand a score of theories. Research and practical application are infinite debtors, the one to the other. And yet the habitual neglect of the claims of the former in our new civilization, is sufficient reason for limiting our attention to research as having so richly contributed to our present practice in electricity.

In addition, however, to the motives already indicated, I should mention at least two others as urging to this line of thought. The first is: The blank discouragement and almost insuperable difficulties encountered by the American student, who may aim to further research for its own sake; the second: the pressing necessity for establishing in our midst foundations whose chief aim shall be the advancement of physical research, and the indoctrination of its results into the public mind. To these points I shall now and again refer.

For, if we could show but a little more clearly how the great practical operations exhibited are the direct result of the past study of experimental and theoretical science; if we could show that all the great inventions presented to our view drew their very existence from the patient and faithful investigations of men engaged in pure research, might we not entertain the fond hope that some more decided, some more earnest movement should be initiated to further that scientific spirit in our midst?

It would be useless to disguise the difficulty of making a statement of this dependence of the exhibited results upon pure science, that should deeply affect every mind. To the majority of spectators at the exhibition, I have no doubt that the prominent impression was the beautiful spectacle realized by the inventors' skill. At most, the immediate practical result was all this type of mind cared to appreciate. They may have been dazed and somewhat puzzled, but it is to be feared that to them the presence of the real presiding genius was never clearly disclosed. There are, however, others who glance through the great display with different eyes. To these are present the long array of experiments and theoretical investigations at the basis of many a single practical result. And again, they recall a single experiment which means ten thousand dynamos of a hundred different types. Let us, then, join this group as it studies the exhibition, and gather at least a few glimpses of the real origin of the important industrial display.

Our attention, as we enter, is for a moment arrested by the title: "The *International* Electrical Exhibition of the Franklin Institute." Now, the warmest admirers of the exhibition admit that there was comparatively little in the way of foreign exhibits to warrant the title international. The quick succession in which such exhibitions had been held in Europe, and the consequent multiplied expense to exhibitors, was undoubtedly the factor which prevented the full realization of the plan of the Institute. And yet, from a philosophical standpoint, the exhibition could not be less than international. We shall, indeed, have to say that nearly all the great spirits in physical research, to whom we have to refer as contributors to the result, were nurtured by the European nations; and that it is to the enlightened encouragement of research abroad that this exhibition owes most.

As we now glance over the character of the electrical display, and note the deftness with which this strange form of energy serves the purposes of our modern life—as we find electricity no more a mere plaything in the hands of a few scientists, but now the willing servant to a thousand-and-one earnest uses, we cannot but mark the severe contrast between this result and the unpromising beginnings.

Instinctively, our imagination turns back to that early American time when, in or near the self-same locality, there was to have been held another electrical exhibition. Strangely enough, we call this the electrical exhibition of the Franklin Institute, while the other was an exhibition given by Benjamin Franklin himself. The marvelous demonstrations in electricity made at that exhibition must indeed have stirred the reflective minds of early Philadelphia as deeply as the wonders of our exhibition could have affected any of us.

It seems that, in a mild spirit of revenge upon the great difficulties encountered in developing anything of immediate use from his electrical experiments, and as a sort of semi-ludicrous, semi-earnest challenge to those who doubted the eventual utility of such high scientific pastimes, Franklin wrote of that earliest American electrical exhibition the following prospectus, which I shall reproduce with his own emphasis:

"Chagrined a little that we have been hitherto able to produce nothing in this way of use to mankind; and the hot weather coming on, when electrical experiments are not so agreeable, it is proposed to put an end to them for this season, somewhat humorously, in a party of pleasure on the banks of *Schuylkill*. Spirits, at the same time, are to be fired by a spark sent from side to side through the river, without any other conductor than the water; an experiment which we some time since performed, to the amazement of many. A turkey is to be killed for our dinner by the *electrical shock*, and roasted by the *electrical jack*, before a fire kindled by the *electrified bottle*: when the

1. A lecture delivered before the Franklin Institute, February 8, 1886.

Digitized by Google

healths of all the famous electricians in England, Holland, France, and Germany, are to be drank in *electrified bumpers*, under the discharge of guns from the *electrical battery*."

We are happy to say that Franklin's dream of something "of use to mankind" from electrical research was fully realized at the recent exhibition, held but a little more than a century after that of his own.

What a glowing picture should we have had from the ready pen of the old statesman, could he, by some magic of the imagination, have been invited into the ideal studio of our modern exhibiting electrician. There he should have found an apartment decorated on every hand with the beautiful results of the electro-metallurgic art, furnished with tables bearing a wealth of electro-plate, with books, fine pictures, and rare scientific drawings, reproduced from electrotypes, with clocks strangely moved and controlled by electricity, with electro-chronographs recording, to the utmost fraction, the time of occurrences a hundred miles distant, with electric signal-buttons ready to register both an audible and visible signal at points near or remote, with telephones that allow a conversation to be held at a distance of twenty miles as easily as with one's neighbor, with telegraphic sounders whose brazen hearts thump with messages that have traveled a thousand miles, with a mirror galvanometer whose delicate indications reveal thoughts that have held their tireless course through 3,000 miles of ocean cable, with sphygmographs that record the frequency and the varying force of the pulse of the sick; with stock tickers telling the continuous story of the rise and fall in the pulse of the commercial world; with signaling devices that make police and fire departments, as well as a host of messengers, our house-servants; with electric lamps shedding the soft radiance of daylight, and serving a score of uses, both useful and artistic; and finally, with electric motors ready to move all sorts of machinery, or, if we choose to use the studio as a traveling car, to speedily propel us from town to town by means of the mystical energy that may pass through a simple wire. All this and much more would have contributed to the contrast of the two periods of early experiment and later use.

If we should only regard the visible results, we might, perhaps, consider the lightning rods attached to our exhibition building as the only remaining indication of the early activity of Franklin and Kinnersley. But we must here insist on a deeper insight into the relations of effect with cause in electrical history. Franklin's chief glory consists in the fact that he was among the first to propound an explanation of electrical action; to clearly moot a theory which should thenceforth be used for the furtherance of experiment. If he was among the first to show, experimentally, "the wonderful effects of pointed bodies, both in *drawing off* and throwing off the electrical fire," he was also among the first to take a broad survey of the whole problem of loss of electrical charge, and, above all, to propose to himself such a conception of the action of the "electrical fire" as should be applicable to every form of experiment.

All the way from the sixth century B. C., when Thales rubbed the *elektron*, and noted its attractive effect on light bodies, down to the middle of the eighteenth century, when Franklin and Symmer first stirred the scientific world by their theories of electricity, we note only, for the most part, isolated experiments. Gilbert, who first distinguished between magnetism and this force, which he thence called electricity, had indeed essayed to explain the attraction of electrified bodies by the analogy of the melting together of two drops of water. Otto Guericke had discovered that electrified bodies also suffer repulsion, and probably first had seen an electrical spark. Stephen Gray had distinguished between conductors and non-conductors, and had noticed the electrification of bodies by mere presence, by induction. Du Fay had proved that two distinct kinds of electrification might be excited by rubbing different substances, and that the one class of rubbed bodies attracted the other class of rubbed bodies, while each repelled its own kind. Van Kleist had discovered what is now known as the Leyden phial, and Van Musschenbroek had made it famous among all the learned. Winkler had set fire to a number of inflammable substances by means of the electric spark, and many more curious results had been obtained. But futile, indeed, would have been these isolated experiments, if Franklin, and Symmer, and Winkler, and Aepinus, and Wilke, had not set the world agog by a famous contest over the theory of electrical action.

Experiment was opposed to experiment, and explanation to explanation, in the sharp battle for truth between the unitarian and the dualistic theories of electricity. What matter if the contest between them has continued even to our own day, and the true nature of electricity be almost as much an enigma now as then? It has been the great unsolved problem that has stimulated research, and incidentally brought about discoveries of the first magnitude. We learn here, again, that the clear mooting of a scientific theory may have an immense influence on scientific and material progress, in that it provides an aim and suggests a plan for experimentation. Scientific history abounds with examples which might be cited in illustration of this sort of stimulus to progress. You will allow me to divert your attention to an analogous and notable example in the history of astronomy.

When Copernicus found that the conception of the earth's motion around the sun accorded best with his observations of the positions of the planets, and he announced the bold hypothesis, it was opposed on the ground that if the earth moved in an orbit, the fixed stars should also appear to describe small movements on the heavens; in other words, we should be able to determine the parallax, and consequently the distance of the fixed stars in terms of the earth's distance from the sun. No such movement was observable in the stars, and Copernicus was obliged to assert that the stars were so distant and the displacement due to parallax so small that his measurements could not detect the motions. Here was the challenge to the improvement of the instruments and methods used in observing—a challenge which bore the richest fruit. Copernicus could determine stellar position within several minutes of arc, Tycho Brahé within one minute, Bradley within a second or two; and only when Bessel, in 1836, brought it down to tenths of a second, was the distance of a fixed star actually measured. The final proof of the justice of the Copernican statement concerning the immense distances of the stars was, however, by no means the main acquisition to astronomy. Tycho Brahé had laid the foundation for the discovery of Kepler's laws, Bradley had discovered aberration and nutation, and astronomy had advanced to the point of refinement in the measuring process that made the discovery of the law of gravitation by Newton possible. But above all, delicate instruments had been invented and rigorous mathematical methods of observing had been devised, which should remain a rich legacy to physical science for all time.

Thus also in electricity were the arts of observation perfected, and the discoveries multiplied by a ceaseless desire to prove the correct conception concerning the nature of the electrical action. On the one hand, electroscopes, electrometers, unit jars, and other devices for the qualitative and quantitative measurement of this force, were devised by many. On the other hand, it was reserved for Tobias Meyer to suggest and for the great Coulomb to prove that electrical repulsion and attraction followed the rigorous mathematical law of decrease according to the inverse square of the distance. These men were both able mathematicians, but Coulomb in addition made himself the father of electrical measurement by the invention and shrewd application of the torsion-balance, and you shall find that the great discovery he made is fundamental to all electrical theory and practice. Ofttimes this law

Digitized by Google

of Coulomb is hid by the later deductions and by the nearer rules of practice, but if you go back to fundamental conceptions you finally cast anchor in a little mathematical expression borrowed from that which states the law of gravitation. Thus, in the search for the true nature of electrical action, now an ingenious instrument, now a great law is discovered.

It is here to be remarked that although all this was accomplished in electricity, generated by friction, we find scarcely any vestige in our electrical exhibition of this method of production. Indeed, I do not remember to have seen there a single instance of this method of producing electricity. And yet there, as constant reminders, stood the old historical machines and there the educational examples of the "balance à torsion" of Coulomb.

If, now, we seek out the sources of the electricity used in most of the ordinary electrical appliances shown, and used particularly in connection with our devices for communicating thought to a distance, we shall find the voltaic battery silently furnishing a constant supply.

It was in 1790, that Galvani first announced the great discovery which led finally to the development of this new source of electricity. We will not, as has so frequently been done, place this discovery to the account of the mere accident of the twitching of frogs' legs, when touched by metal, as they lay near an electrical machine. That was undoubtedly the occasion of directing Galvani's attention to a new phenomenon; but we must not ignore the fact that Galvani, as a student of medicine, knew something of animal electricity and of electricity in general. For to his interest in animal electricity and to his bias in that direction, we must attribute both his closer study of the occurrence and his theory that the real seat of the electricity was in the nerves of the frog.

It was, however, to Alessandro Volta, that the greater credit was reserved of setting the whole matter in a clear light. Although his first work on this subject bore the title of *Animal Electricity*, he soon directed his attention to the contact of the metals as the cause of the electrical disturbance. With the method of a trained physicist he ceased to use the frogs' legs as electroscope, and showed that still the simple contact of two metals produced an electrical action. You remember the old experiments with two coins of different metals which might either produce an acid taste by contact in the mouth or a flash of light before the eye if it were included in the circuit. With this, Volta's investigation had but just begun. He called attention to the fact that, in this same experiment with the metals in one relation in the mouth the taste was acid, in another relation the taste was that of an alkali, and that moreover the taste *continued* without interruption so long as the contact of the metals continued. This we now recognize as the first glimpse of the chemical action of the electrical current. Intent on clearing up his contact theory of the production of electricity, he studied the effect of contact of various metals, arranged them in a series in which the middle terms might be removed with indifference, and proved that a current could only be produced when a liquid intervened in the series. He discovered the first form of what we now know as the voltaic battery. Everyone knows something of the classical contest between Volta's contact theory and the conception of the animal electricity of Galvani, as well as of that other greater contest between the Volta contact theory and the chemical theory of the battery. It required a commission of the Institute of France, with such members as Laplace, Coulomb and Biot to give full recognition to the immense services rendered to science by Volta's labors.

It is interesting at this time to note that at least three lines of investigation diverge from the standpoint of Galvani and Volta. Galvani was absorbed in animal electricity, and among the number of experimenters who, with renewed vigor, took up this line of research could be reckoned Von Humboldt, who is said to have inflicted on himself a large and painful wound in order that he might study the relation of electricity to animal tissue under normal conditions. If medical electricity, so fully represented at the exhibition by a variety of appliances, has any sufficient reason for its existence, it should have profited by these and a long series of similar researches that followed in Galvani's wake. On the other hand, Volta inaugurated a series of the most refined investigations on the potential of contact, and it is probable that no other electrical question has developed more refined methods of experimentation. Although a brilliant line of physicists, from Volta to Sir William Thomson, discuss and experiment on the question, the mystery is still ours. The third direction given to investigation was, as you know, the chemical one, with its Ritters, its Davys, Becquerels and Faradays.

It would serve no useful purpose to recall the names of a tithe of the chemists and physicists who have step by step developed the voltaic battery as now used. Whether of one fluid or two fluids, of higher electromotive force or of lower internal resistance, it matters not, the battery is the finished product of an hundred willing workers in the field of pure research.

No one who fails to recall the familiar history of electrical progress can have a just conception of the many and widespread ramifications incident to the introduction of the Voltaic method of generating electricity. We have only to pause before one of those large storage batteries of the exhibition to be reminded of the early discovery by Ritter of the polarization of the voltaic cell, and the later developments of polarization, particularly in the hands of Planté, into a factor as useful as it was once inimical. This is but an instance, and very briefly stated, of many lines of research suggested by the battery. We mention next the galvanoplastic processes so rich in utility and beauty, as due to the study and use of the battery in electrolytic action, by Faraday. The electrotypes, electro-plated ware, and all sorts of artistic reproductions, seem fully to repay the wearisome investigations in the field of electro-chemistry.

But, in passing to and fro through the exhibition, we have noticed many appliances which owe their utility to some relation between electricity and magnetism, and Oersted's early experiments with the galvanic battery, and his consequent discovery of a direct relation between a current of electricity and a magnet, can no longer be kept in the background. We here come upon another epoch-making experiment.

It was in the course of preparation for a lecture on "Electricity, Galvanism and Magnetism," in the spring of 1820, that Oersted, as he informs us, first tried the celebrated experiment of the effect of a current of electricity on the magnetic needle. It cannot be said that the discovery was altogether unsuggested by the previous course of science. Franklin had magnetized needles by the passage of the electric spark, and Oersted himself had remarked the uneasy movement of the magnetic needle during a thunder storm. It was then the next step to imagine the influence of the electric current on the needle. Oersted not only exhibited the action of the current on the movable magnetic needle, and conversely by freely suspending a little battery caused it to move by means of a magnet as though itself a magnet, but he brought out clearly the relation of direction of the current to the deflection of the needle. His little pamphlet on the subject, written in the Latin language, and hence at once accessible to all the learned of other countries, produced a profound sensation in scientific circles. Eagerly were the experiments repeated, and with astonishing rapidity were new discoveries added. In Germany, Seebeck, Erman, Poggendorff and Schweigger took up the subject; and the very galvanoscope then made by Schweigger and Poggendorff by coiling the wire a number of times about the movable magnet

Digitized by Google

so as to multiply the Oersted effect, is our current detector to-day.

It was, however, in France that the news of this discovery was to be crowned by developments of even greater moment than the original experiments of Oersted. Arago brought the news to Paris, and, assisted by his friend Gay Lussac, showed that the electric current not only deflected a needle, but magnetized a steel rod when it was passed through a spiral wound round the rod. They also showed that a wire included in the galvanic circuit actually played the part of a magnet in attracting iron-filings. You remember how, similarly, the attendants of some of the heavy current dynamos at the exhibition amused us all by showing the power of a simple copper wire to attract nails, files, and such like. That, we suppose, was but a playful recognition on the part of the dynamo of its high-born blood.

To André Marie Ampère, however, belongs the glory, not merely of making a few novel experiments but of so theorizing upon the experiments made, and of so inventing new experiments according to theory, and as groundwork for the development of theory that he was enabled to put in place the very corner-stone of the science of electro-dynamics.

And just here we must be permitted to say that there could be no better commentary on the powers of mathematical training in determining the best course of progress, than to institute a comparison between the articles of Oersted and of Ampère, as they stand recorded in two successive volumes of the *Annales de Chimie et Physique*, of the year 1820. But for the lucid conceptions of the French mathematician, we might still be speaking of the "electrical conflict" of Oersted. To state a few of Ampère's achievements in electricity: He introduced the convention, which has become permanent, of regarding the direction of the current to be that of the positive electrification. He stated so simple a mnemonic for predicting in what direction the needle will be deflected by a current, that the current always "enters the heels" of the practical electrician, and "flows out at his head," when he "looks upon a needle whose north end is deflected to the left." He found that currents acted either attractively or repulsively on currents, according as those were in the same or in opposite directions. But the most important step taken by him was in introducing an electrical conception of magnetism. Since the needle directed itself at right angles to the current, currents flowing from east to west round the earth must produce its magnetism, while artificial magnets are also to be conceived as formed of molecular currents. The whole question then resolved itself into the simple elements of the action of one current on another. The problem was now one of mathematics and mechanics, and he resolved it with abundant success.

As we leave this eminent contributor to the realities of our exhibition, we cannot omit the beautiful eulogy Clerk Maxwell wrote, when he himself recast the mathematics of the subject: "The experimental investigations by which Ampère established the laws of the mechanical action between electrical currents, is one of the most brilliant in science. The whole, theory and experiment, seems as if it had leaped full-grown and full-armed from the brain of the 'Newton of electricity.' It is perfect in form and unassailable in accuracy, and it is summed up in a formula from which all the phenomena may be deduced, and which must always remain the cardinal formula of electro-dynamics."

We pass now to the next great step that had to be taken before current electricity would become the facile, intelligent servant of the world. This time, also, it is the able mathematician who, in the person of George Simon Ohm, first discloses the wonderfully simple relations existing between the conductivity of a circuit and the electricity passing. There is no practical electrician, however ignorant of the fundamental demonstrations, or of the repeated experimental and theoretical verifications, that does not pin implicit faith to Ohm's law. Electromotive force = current × resistance: is the magical rune now applied in a thousand mystic transformations common to the art and practice of electricity. If space permitted, the line of thought of Ohm's celebrated memoir would be an interesting topic; but we must at least remark that, taking into account the changes in our electrical nomenclature, the very statements of that memoir have now become the familiar conceptions of all who comprehend what is meant by the term "electrical current." Through Ohm, the practice of electricity is also probably a great debtor to no less a mathematician than Fourier; for Ohm himself states how the conceptions Fourier had used in his great work on the theory of heat, were by him transferred to electricity. And we mention this indebtedness in order to be able to hint at the vast obligations due by electrical progress to the prior cultivation of mathematical analysis in other fields. In connection with such an application as that made by Ohm, Fourier's own words seem like a revelation. "Mathematical analysis," says he, "seems to be a faculty of the human mind, destined to supplant the shortness of life and the imperfection of the senses; and what is still more remarkable, it follows the same course in the study of all phenomena; it interprets them by the same language, as if to attest the unity and simplicity of the plan of the universe, and to make still more evident that unchangeable order which presides over all natural causes."

We are now in possession of all the essential elements that go to make up the electro-magnetic telegraph: the voltaic battery, the magnetic action of the current, the laws of that action, and, finally, the law of Ohm. A new interest in all the variety of telegraphic and signaling appliances displayed at our exhibition dawns upon us when thus regarded as the direct and necessary product of researches such as these in the field of pure science. Yet a tithe of the important researches bearing on a line of practice such as that of telegraphy, could not be instanced. Enough has been cited to conclusively show, to what great element in human progress, an exhibition of these practical results is chiefly debtor. But if it is still doubted whether these scientists ever know what they are doing, and for what they are doing it, we must remind you how it was in the very highest realms of pure research that the first suggestion of the magnetic telegraph was made, and also the first actual telegraph line constructed and used. For it was within three months after the knowledge of Oersted's experiment, that Ampère had actually proposed the first plan for a telegraphic communication by means of electro-magnetism. And it was between the astronomical observatory and the physical laboratory at Gottingen that the eminent scientists, Gauss and Weber operated the first practical telegraph line.

The dynamo-electric machines displayed in such variety, and destined to several uses of profoundest interest to us all, will ever remain the prominent features of the exhibition; as in memory, we pass through the fascinating scene. Those dynamos always excited our respect. Their very crudeness did not even detract from this feeling. There was about them a certain masculinity of character that impressed itself on everyone, and gave a tone of work-a-day earnestness to the entire exhibition. This earnestness of spirit was real and gave promise of a vigor of progress for the future, that should equal, and doubtless excel, the historical development of the steam engine.

While the variety of type pleased the mechanical fancy, it did not daze the scientific analysis. However crude or however typical of what the future dynamo may be expected to be, each machine was readily analyzed into its essential elements and the action of these referred to the original principles of science.

There are two great events in science that made the dynamo-electrical machine possible; one is that of the

Digitized by Google

discovery of magneto-electric induction by Faraday, in 1831; the other that of the establishment of the great laws of the correlation of forces and the conservation of energy, during the fourth and fifth decades of this century by a goodly array of mathematical and experimental genius. Without the well-known researches of Faraday on magneto-electric induction and the consequent development of the magneto-electric machine from the early Dal Negro and Pixii types up to the Alliance and Pacinnotti, there could not have been a suitable preparation for the improvements of a Siemens or a Gramme. And as an ever-present reminder of the value and eventual use to mankind of such researches, there should be stamped upon every dynamo the name of Michael Faraday.

Again, it is quite remarkable that the title of Werner Siemens' article, in which he, in 1861, announced the dynamo-electrical or reaction principle, should have read: "Concerning the Conversion of Mechanical Energy into Electrical Current, without the Use of Permanent Magnets." It is but an evidence that the other great discovery in science referred to, had borne one of its legitimate fruits. Everyone is now familiar with the history of the discovery, proof and application of the laws of energy by Mayer, Joule, Thomson, Helmholtz, Clausius, and others; and everyone also with the kind of science these names imply.

We can, therefore, pass on to another definite instance of the fruits of the law of conservation of energy that should be mentioned in this connection. We have already spoken of Ohm's law, which is, of course, also here applicable in the dynamo; but we purposely, hitherto, omitted to mention the second law of electrical currents, because of its peculiarly useful relations to problems concerning dynamo currents. According to this law heat is generated or work performed in any given circuit in the following relation: quantity of heat = square of current × resistance × time. There is scarcely a practical calculation concerning the performance of the dynamo into which this little formula does not enter. It is the key that is constantly in the hands of the practitioner, and that easily unlocks the dynamical riddle of the new engine. This time it is the experimental researches of Joule and Lenz, which first proved the relation, and it is the mathematical skill of Clausius that finally expressed the law as a deduction from principles already known.

It would scarcely add to the force of our main argument if we should go further and show how the whole dynamo-electric engine has been subjected to a series of scientific tests, and of theoretical discussions which are destined to make a special kind of engineering. Enough that we can now, at least with partial insight, derive the scientific origin of the dynamo from the old-time rubbing of a piece of amber.

We must also omit discussion of the deep obligation due by our exhibition to pure research in developing the very steam engine necessary to the generation of the new form of energy. To mention the bearing of Regnault's researches and the influence of the mechanical theory of heat, would lead us far away from the electrical side, and is here unnecessary.

We will, however, as we glance at the work to which the current generated in the dynamo is put, remark that it was in Davy's laboratory that the electric arc was first brought out in all its glory. We now see *hundreds* of arc lamps above and around us. Turning to the soft and beautiful light of the incandescent lamps, we see in imagination the spiral of wire that, under the electric discharge, became glowing in Kinnersley's old air-thermometer. If we see the dynamo current at work in the chemist's hands, we have again to recall Davy's experiments and Faraday's exposition of the laws of electrolysis. If we watch the electric motors, as they drive all sorts of machinery, we are borne back in imagination to the year 1835, and with the great physicist, Jacobi, of St. Petersburg, we go sailing up and down the Neva in a boat propelled by a magneto-electric engine, while we learn from him some of the laws underlying the wonderful result.

It is the ocean cable, only present in our exhibition by proxy, that must next serve as the text for a brief reference to the beneficent influence of mathematical theory in general and of the theory of the potential in particular, in bringing about the great achievements. The practical electrician we have ofttimes met in our wanderings through the exhibition has spoken of electrical "potential" as though that were something to put one's ignorance to the blush. But we have sometimes wondered whether he imagined that the word stood primarily in electricity for a purely mathematical conception, which he now unconsciously regards as a physical fact. Moreover, in the occasional references to the indebtedness of practical electricity to mathematical investigation, we have not been able to give even a partial idea of the theories developed, or of their bearing on practice. The only way in which we can pretend further to supply this omission, is to state, in a few sentences, the influence of a single mathematical conception on the progress of the computation of the electrical forces. Laplace, in treating the attractive forces of gravitation, had used a function essentially proportional to the attractive masses and the simple inverse distance. This function, V, has since become famous for its power in dealing with all problems in which the forces act according to the inverse square of the distance. Green and Gauss first applied it to electrical problems, the latter to a general investigation, comprehending gravitation, magnetism and electricity, and subsequently Sir Wm. Thomson, and others, used it as the very key to the solution of the most difficult problems. Now, to use the cable as an illustration of the practical bearing of researches apparently so far removed from actualities, we find that Sir Wm. Thomson, using the conception of the potential, already in 1855 derived the little formula which expresses the electrostatic capacity of a cable, considered as an immense Leyden jar. We stand amazed when, after the breaking of a cable, we see a vessel sent to mid-ocean, there to put down grappling-irons through miles of water and successfully recover and splice the artery of commerce. But we should not forget the little formula, whose use could point to the very spot where the break must have occurred; and we should not fail to remember the formula's out-of-the-way origin.

As we take our parting glance of the fascinating and successful exhibition, we may sum up all in the statement that electricity is now subject to accurate measurement. The magnetometers, electrometers and galvanometers, and the multiplicity of meters that measure every condition of electrical action, stand as the crowning result of theoretical and experimental electricity. If we ask, why the instruments are of such and such forms, we are referred to the mathematics; if we inquire how they are used, we learn also the necessity of acquiring the art and practice of experimentation. If we inquire upon what general method the measurements are made, we are sent all the way back to the great astronomer Gauss, to learn of him the absolute system of expressing forces, and if we ask for the unit of measure, the yard-stick of the practical electrician, the so-called ohm, we have to intercede with the long line of eminent physicists, beginning with Wilhelm Weber and ending with Rayleigh and Rowland, for a copy of their standards.

In every element of the exhibition we detect the most undoubted relations to pure research; and when we run over the scene even thus cursorily, we behold pure research the presiding genius, on whose behests depend the successful activity of every department of electrical practice here represented.

The lessons to be drawn from this review are evident. Research in America should be raised to a higher plane and such methods adopted to bring about the desired

Digitized by Google

result as may have the sanction of past success. The reason why there are not more American names associated with the progress of physical research (and there are many more in this department than we have had occasion to mention) does not lie in the lack of interest, or the lack of power in the American student. Apart from the materialistic spirit that we all imbibe, there is the lack of the appliances and particularly of the unrestricted devotion that such work demands.

Speaking of appliances it is at least in the separation from first-class scientific libraries that the American student suffers untold inconvenience. European students in physics would be amazed to learn that in an American city of nearly one million of inhabitants, there could not be found a complete set of, say, Poggendorff's Annalen or Crelle's Journal, or an instance of other volumes which it were occasionally desirable to refer to, in order that experimentation might start in at the right point and lead to the right end. Especially, however, do we wish to insist on the fact that sufficient opportunity is not afforded for that jealous, single-minded attention which science requires. It is not that large endowments are not given to erect fine buildings for laboratories or to provide fine instruments. But it is that there are but few foundations which put the man back of the instruments and allow him to devote himself with undisturbed purpose to the work of his laboratory. If you will recall the influence of but one institution where a foundation is provided which places an unhampered man in the laboratory, you will appreciate the justice of these remarks. The Royal Institution of London was founded, we are told, to promote, among other things, scientific research. To do this it founded a professorship, which gave the incumbent free scope to follow out researches of the purest type. You know what has been done for electrical science by its professors, Davy and Faraday. They discovered the decomposition of the fixed alkalies, the laws of electro-chemical decomposition, the fact of magneto-electric induction and the two-fold magnetism of matter, together with a whole body of general information on electrical subjects. You know then how deep a debtor our electrical exhibition was to this single foundation for the promotion of research. It need only be said that the prospect is clearly open of doing not only important service to science, but some day to humanity at large, by diverting some of the American wealth to such noble foundations. May we not hope that our public-spirited citizens will thus endow our own Institute, an institution in many respects similar to the one just mentioned. Such a happy result would certainly show that America was not altogether oblivious of its lasting obligation to the contributions already made toward its material and social progress, by the eminent cultivators of pure research.

MR. WALLACE GOOLD LEVISON'S FOCUSING ARC ELECTRIC LAMP.[1]

Since Sir Humphrey Davy, in 1813, by touching and slightly separating two pieces of carbon, forming the terminals of a powerful voltaic battery, first disclosed the dazzling voltaic arc, the need has always been felt, for experimental purposes, of a steady automatic arc electric lamp, which, until recently, was only and but imperfectly satisfied by the exceedingly delicate, unreliable, and costly clock-work contrivances of Foucault and Duboscq. These, however, are now of more historical than practical interest, for, since the development of the dynamo-electric machine first made possible a broad commercial field for electric lighting, the production of an efficient lamp has appeared of sufficient importance to encourage the unremitting activity of an army of inventors, who, rapidly surmounting the mechanical difficulties of the problem, have developed simpler, more efficient, and, in many cases, purely electro-mechanical devices for feeding the carbons.

Among the earlier of these inventions appeared that of Mr. Charles F. Brush, whose application of the annular clutch was so much like a revelation, that, excluding rack and pinion combinations, its repetition in some modified form is looked for in almost every carbon regulator that is announced as new.

In consequence of this repetition the study of lamp mechanisms seems almost entirely relegated to those concerned in commercial electric lighting; but it is believed that the lamp of which working models are herein first illustrated, will interest even the casual reader.

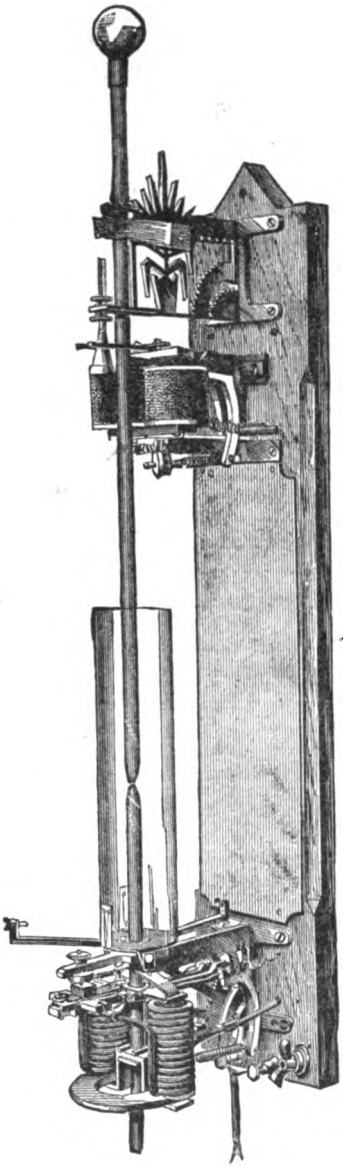

Figure 1.

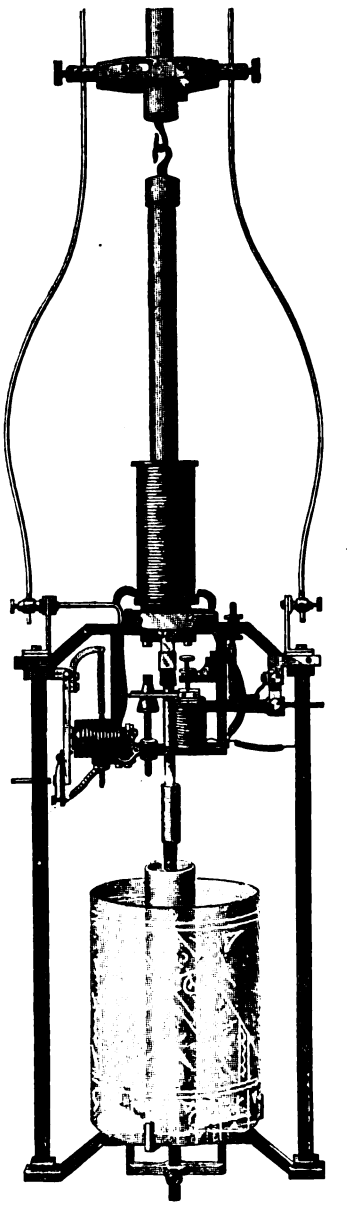

Figure 2.

In figure 1 is shown an ornamental wall or bracket lamp, which may be briefly explained as follows:

The upper bare carbon is clasped by an elastic steel fork, resembling a common tuning fork, which extends from a lever that also carries the armature of a small electro magnet, and is raised upward by a spring. This magnet is wound with two wires at the same time, and when the current from the dynamo is first sent through the lamp, the carbons being separated, its only circuit is through a double wound resistance coil hidden behind the lamp and one wire of this small electro magnet, which

1. United States patents No. 227,025, April 27, 1880; No. 259,811, April 5, 1881; No. 289,425, December 4, 1883; No. 335,968, February 2, 1886; other patents applied for.

Digitized by Google

thereupon attracts its armature and pulls the fork and upper carbon down. A steel cone is so located that the fork spreads open upon it when the armature nearly touches the magnet, and the upper carbon, no longer clasped by the fork, freely drops to contact with the lower carbon. The circuit of the lighting current is thereby closed through the carbons and the coils of a second electro magnet fixed between the lower carbon guides. This electro magnet, wound with coarse wire, is thereby strongly magnetized and attracts its armature, which is also fixed upon a lever raised by a spring. Upon the end of this lever is a spring contact, so arranged, that when the armature is thus attracted, it closes a circuit through which one-half of the shunt current, energizing the upper magnet, is deflected, each half traversing the coils of the upper magnet through separate wires in opposite directions, and thereby demagnetizing it. The upper carbon is therefore raised by the upper spring and lever from the lower carbon, and the lighting arc is produced. As the arc gradually lengthens the lower magnet weakens until its armature is raised by the spring and lever that supports it, and the contacts upon the end of the lever being thereby more or less separated, operate as a variable resistance, and the upper magnet, again energized through the predominance of the permanent branch of the shunt circuit, feeds down the upper carbon as it consumes. In this way the lamp operates indefinitely as a single feed lamp, the lower carbon being held in place by a second fork immovably fixed at the base to the frame of the lamp. Through this fork the lower carbon can be pushed up quite easily if necessary, but the fork is beveled to cutting edges, which bite the carbon firmly, and resist any ordinary effort to push it down. To change this lamp from a single feed to a focusing lamp, it is only necessary to fix upon the lower armature a pair of knife-edged clutches, as shown in figure 1, or upon the lever a third fork. When the lever rises it will then lift the lower carbon with it, and so both carbons will be fed. Instead of the forks, or the clutches shown in the illustrations, annular clamps may be used.

It is apparent that if an upper feed lamp only is required, the coarse wired magnet, with its lever and variable contact, may be removed to another part of the lamp. Figure 2 represents a hanging lamp, in which the magnet is located near the upper mechanism. In this figure is also shown the resistance coil which surrounds the suspending pipe, but being a differential coil it does not magnetize the frame of the lamp. The figure also shows a convenient method of suspending the lamp, and a cut-out switch which permits of its ready removal.

All of the objections which have been suggested by experiments with this lamp have been met, it is hoped, by competent devices, which form the subject of pending patents, and are, therefore, not shown in the figures. They enable the levers to lift the carbons vertically half an inch if desired; provide a device by which the main current is caused to start the light without traversing the resistance coil, and which also operates as automatic cut-out; and provide guides which adjust themselves to irregular carbons. Hence carbons of any desired lengths may be used, and the attention of the trimmer limited at pleasure.

One of the peculiar features of this lamp is the variety of forms it may assume. The variable contact and its heavy magnet may, for instance, be removed from the lamp to any distance, and yet by a turn of its adjusting screw the arc may be reduced, or at pleasure enlarged, to the point of over-crowding the resistance coil. By slightly modifying the construction of the separate variable contact, adding a lower small differential magnet to the lamp, and a proper system of wireing, the focusing lamp may be made so light and compact in construction as to appear, perhaps, especially adaptable for portable use, as in reflector or lantern projections.

Models of the lamp in several forms have been made, but the limit of the present notice permits no further details than a brief mention of some of its probable advantages, which are simplicity and cheapness of construction, absence of the customary counterpoise for the weight of the carbon, and consequent increased length of carbons, and relief to the trimmer; absolute grip of the fork clutch, and consequent little sensibility to jar; avoidance of trouble from wear of the carbon rod when used; facility of adjustment to any dynamo electric current by a simple change of resistance coils; and, finally, facility of change from a focusing to a single feed lamp, or the reverse.

PRACTICAL NOTES CONCERNING THE CONSTRUCTION, USE AND MANAGEMENT OF STORAGE BATTERIES.

BY A. RECKENZAUN.

THERE are, at the present moment, indications which tend to give one the idea that the manufacture of storage batteries is fast developing into a great industry, and, if the existing rate of advance is maintained, we may expect that this new industry will soon become one of national importance. England is now the only country in which secondary batteries are produced on a sound commercial basis, and the progress which has been made is in a great measure due to large pecuniary sacrifices during the early stages of development. By small and apparently insignificant steps, and with great efforts and much unnecessary labor, have these batteries been brought to a certain state of perfection, and there can be no doubt that further improvements will yet be brought about; but such improvements will be sought in the direction of increased durability and reduction in cost of manufacture.

The premature confidence reposed in secondary batteries was long ago destroyed by early failures. Successes during the last two years, however, have had the effect of partially reëstablishing confidence, and we may regard it as a happy incident that a reaction did not set in suddenly, for in that case there would have been a rush for the article, and, in the attempt to satisfy too great a demand without the requisite means of supply, inferior articles would probably have found a market.

How far the storage battery has reëstablished itself in public favor may be gathered from the fact that some £60,000 worth of storage batteries have been legitimately ordered and sold during the past twelve months. This represents, in the aggregate, about 1,000 tons of cells; this amount has been furnished by two or three firms in this country; we take no account of the tons of storage batteries which have not an established reputation, but which may have found purchasers, and others that may still pine in "purgatory."

The importance and desirability of an economical and practical secondary battery has been fully recognized by all who have considered the subject, and it is generally accepted that though there is a considerable amount of loss in the conversion of energy, the undeniable convenience of a method of electrical storage greatly compensates for the attendant waste. Besides the loss of energy, there are two other objections to the employment of storage batteries, and these are first cost and depreciation. How far these objections may be justified, how far they have been removed, and in what direction they may be still further eliminated, will be the theme of these notes.

LOSS OF ENERGY.

It was generally assumed, in times when dynamo machines gave an efficiency of only 70 per cent., that the losses between the shaft of the prime mover and the terminals of the battery amounted to about 50 per cent. of the available power; modern dynamos, however, have an efficiency of 85, and some even 90 per cent. But, in the application of the accumulator as an auxiliary to an installation, we have neither to blame nor to credit the cells with the goodness or the defects of the dynamo; and makers of dynamos

Digitized by Google

would at once inform us that the secondary battery has to stand on its own merits. The efficiency, therefore, of the storage apparatus is a fraction of the total energy supplied to it by the electric generator, and this fraction amounts to not less than $\frac{7}{10}$ or 70 per cent.; in other words, for every 100 watts sent through the cells, 70 watts, at least, reappear as useful work.

Let us express this loss in terms of pence, or a fraction thereof, assuming the source of energy to be coal, at 20s. a ton, converted into mechanical energy through a steam-boiler and engine consuming fuel at the rate of 5 lbs. per horse-power per hour. In round numbers, the cost of coal will come to one half-penny, and, since the steam horse-power has been found to yield sufficient energy, through the medium of a dynamo, to keep eight lamps of 20 c. p. incandescent, the light per lamp hour, as far as coal is concerned, will cost $\frac{1}{16}$ of a penny.

Through the intervention of the storage battery, then, the cost per lamp per hour, in fuel, is raised to nearly $\frac{1}{7}$ of a penny. There is of course also more water used, and a greater wear and tear of machinery if the plant is working 10 hours for charging, and the accumulators alone are to supply light during seven hours without the engine. It is, however, seldom arranged that the engine is to stand idle whilst the maximum number of lights is required, and when the charging machinery is working in conjunction with the accumulator, the latter serving principally as a regulator or safeguard, then only part of the current generated by the dynamo would pass into the cells, and the loss will be less in proportion. Against the objection relating to waste of energy, we may yet place the fact that when only a few lamps out of many are required to be alight, as would frequently be the case in most installations, we need not work the engine and dynamo, the wear and tear of which, as well as cost of attendance, is practically the same whether five lamps are in use or as many hundred. Moreover, if the consumption of fuel constituted the major part of the cost of electric lighting, then, with the above figures before us, we may still stay to consider whether it would be wise to adopt the storage system; but we know that the cost of coal in large installations is less, and in medium-sized and small installations much less than one-half of the total outlay; hence the apparently big waste of 30 per cent. of the available power will appear small in comparison with the sum of items involved in electric lighting, when on an average we may take the value of a lamp hour at one half-penny, or between five and six times the cost of the fuel at the comparatively extravagant rate of five lbs. per horse-power hour and 20s. the ton.

The foregoing is merely an example of a case where steam power has to be expressly put down for the purpose of electric lighting, but there are numerous instances when the advantages of storage batteries outweigh the evil of waste entirely, where they come in not only as a great convenience, but with absolute economy, always providing that their prime cost and maintenance are within reasonable bounds; which must and will be the case so long as the price of lead does not much exceed present rates, and improvements in manufacturing processes continue to be effected. These favorable cases we may now proceed to consider:

First—A case where the available source of power is small, but continuous. There are thousands of factories, works, or mills using steam power throughout the day, and where a small increase of horse-power above the ordinary requirements will hardly be appreciated, and where the hours of darkness, even in winter, do not exceed three or four per day. There a dynamo may run off the common shafting all day with hardly any attention, and accumulate quietly in secondary batteries the energy requisite for lighting the shops in the evening or early in the morning. Again, there may be a small steam engine, gas engine, or a small water wheel or turbine, running continuously for 12 or even more hours a day, the power of which might be inadequate to give light to a given number of lamps by direct application, but energy might be accumulated during the many hours when not otherwise wanted; this would virtually amount to double or treble the power of the source for the few hours when used for lighting or other purposes.

Secondly—A case, local circumstances being favorable, of even greater importance than the first, where power from a natural source would be entirely running to waste; where, in consequence, we should have a decided gain, even were the efficiency of the apparatus not more than 20 or 30 per cent., instead of actually 70 per cent. This is the case with rapidly-flowing rivers and waterfalls in the vicinity of towns, industrial centres, or residences. In the United States some 14,000 h. p. are taken from waterfalls which formerly ran to waste, but now furnish the best of all illuminations; and on the Continent of Europe, also, water power is similarly largely applied; but in none of these advantageous situations are storage batteries as yet used, although they might treble the capacity of the plant. This is principally because the improved batteries are not sufficiently known, and partly because they are still looked upon as being too expensive.

Thirdly—A case where the stored energy is to be utilized when away and disconnected from the generator. Electric cars and electric boats illustrate this case.

These are old stories, dished up afresh; when first told, five years ago, they were mere theories—exercises of enthusiasm; to-day they are realizations. To-day, by this repetition, we record facts. This makes all the difference. —*Electrical Review* (London).

(*To be continued.*)

DYNAMO-ELECTRIC MACHINERY.

BY J. HOPKINSON, M. A., D. SC., F. R. S., AND E. H. HOPKINSON, M. A., D. SC.

(Concluded from page 23).

DESCRIPTION OF MACHINE.

THE dynamo has a single magnetic circuit, consisting of two vertical limbs, extended at their lower extremities to form the pole pieces, and having their upper extremities connected by a yoke of rectangular section. Each limb, together with its pole piece, is formed of a single forging of wrought iron. These forgings, as also that for the yoke, are built up of hammered scrap and afterwards carefully annealed, and have a magnetic permeability but little inferior to the best Swedish charcoal iron. The yoke is held to the limbs by two bolts, the surfaces of contact being truly planed. In section the limb is oblong, with the corners rounded in order to facilitate the winding of the magnetizing coils. A zinc base, bolted to the bed-plate of the machine, supports the pole pieces.

The magnetizing coils are wound directly on the limbs, and consist of 11 layers on each limb of copper wire, 2.413 mms. diameter (No. 13 B. W. G.), making 3,260 convolutions in all, the total length being approximately 4,570 metres. The pole pieces are bored to receive the armature, leaving a gap above and below, subtending an angle of 51° at the centre of the fields. The opposing surfaces of the gap are 8 mms. deep.

The following table gives the leading dimensions of the machine :—

	Cms.
Length of magnet limb	= 45.7
Width of magnet limb	= 22.1
Breadth of magnet limb	= 44.45
Length of yoke	= 61.6
Width of yoke	= 48.3
Depth of yoke	= 23.2
Distance between centres of limbs	= 38.1
Bore of fields	= 27.5
Depth of pole piece	= 25.4
Width of pole piece measured parallel to the shaft	= 48.3
Thickness of zinc base	= 12.7
Width of gap	= 12.7

Digitized by Google

The armature is built up of about 1,000 iron plates, insulated one from another by sheets of paper, and held between two end plates, one of which is secured by a washer shrunk on to the shaft, and the other by a nut and lock-nut screwed on the shaft itself. The plates are cut from sheets of soft iron, having probably about the same magnetic permeability as the magnet cores. The shaft is of Bessemer steel, and is insulated before the plates are threaded on.

The following table gives the leading dimensions of the armature :—

	Cms.
Diameter of core	= 24.5
Diameter of internal hole	= 7.62
Length of core over the end plates	= 50.8
Diameter of shaft	= 6.985

The core is wound longitudinally, according to the Hefner von Alteneck principle, with 40 convolutions, each consisting of 16 strands of wire, 1.753 mm. diameter, the convolutions being placed in two layers of 20 each. The commutator is formed of 40 copper bars, insulated with mica, and the connections to the armature so made that the plane of commutation in the commutator is horizontal, when no current is passing through the armature.

Plate 18.—Fig. 3, shows a side elevation of the dynamo ; fig. 4, a cross-section through the centres of the magnets ; fig. 5, a section of the core of the armature, in a plane through the axis of the shaft.

The dynamo is intended for a normal output of 105 volts, 320 amperes at a speed of 750 revolutions per minute. The resistance of the armature measured between opposite bars of the commutator is 0.009947 ohm, and of the magnet coils 16.93 ohms, both at a temperature of 13.5° centigrade ; Lord Rayleigh's determination of the ohm being assumed.

We have now to estimate the lengths and areas required in the synthesis of the characteristic curve.

A_1 ;—from the length of the core of the armature (50.8 cms.) must be deducted 3.4 cms. for the thickness of insulating material between the plates ; the resultant area is, on the other hand, as has already been stated, slightly augmented by the presence of the steel shaft. A_1 is taken as 810 sq. cms.

l_1 ;—this is assumed to be 13 cms : *i. e.*, slightly in excess of the shortest distance (12.6 cms.) between the pole pieces.

A_2 ;—the angle subtended by the bored face of the pole piece at the axis is 129°, the breadth of the pole piece is 48.3 cms., the diameter of the bore of the field is 27.5 cms., and, as already stated, the diameter of core 25.5 cms., thus, the area of pole piece is 1,513 sq. cms., and the area of 129° of the cylinder at the mean radius of 13.0 cms. is 1,410 sq. cms. ; this value is taken for A_2 in the curves drawn on sheet I. (plate 16). In sheet II. (plate 17) A_2 is taken as 1,600, an allowance of 190 sq. cms. being made for the spreading of the field at the edges of the pole pieces, or $\frac{190}{160} = 1.2$ cm. all around the periphery, that is $\frac{1.2}{1.5} = 0.8$ of the distance from iron of pole pieces to iron of core.

l_2 is 1.5 cm.

A_3 is a little uncertain as the forgings are not tooled all over, it is here taken as 980 sq. cms., but this value may be slightly too high.

l_3 is 91.4 cms.

A_4 is 1,120 sq. cms.

Fig. 3

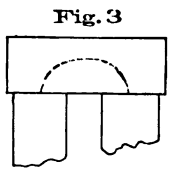

l_4 is 49 cms., being measured along a quadrant from the centre of the magnet thus :—

A_5 is 1,230 sq. cms., intermediate between the area of magnet and face of pole piece.

l_5 is 11 cms.

ν was determined by experiment as described below, and its value is taken as 1.32 ; when the magnetizing current is more than 5.62 amperes its value should be a little greater.

The function $f(a)$ is taken from Hopkinson, Phil. Trans., vol. 176 (1885), p. 455 ; the wrought iron there referred to was not procured at the same time as, and its properties may differ to a certain extent from, the wrought iron of these magnets.

The curves now explain themselves, the abscissæ in each case represent the line integral of magnetizing force in the part of the magnetic circuit referred to, the ordinates, the number of lines of induction which also pass through the armature.

The results of the actual observations on the machine are indicated, those when the magnetizing force is increasing +, when it is decreasing ⊕. The measurements of the currents in the magnets which were separately excited, and of the potential difference between the brushes, the circuit being open, were made with Sir W. Thomson's graded galvanometers, standardized at the time of use. The irregularities of the observations are probably due to the variation of speed, the engine being not quite perfectly governed. The second construction exhibits quite as close an agreement between observation and calculation as could be expected ; the deviation at high magnetizing forces is probably due to three causes, increase in the value of ν when the core of the armature is partially saturated, uncertainty as to the area A_2, difference in the quality of the iron. It is interesting to see how clearly theory predicts the difference between the ascending and descending curves of a dynamo. Consideration of the diagram proves that this machine is nearly perfect in its magnetic proportions. The core might be diminished by increasing the hole through it to a small, but very small, extent without detriment. Any reduction of area of magnets would be injurious, they might, indeed, be slightly increased with advantage. An increase in the length of the magnets would be very distinctly detrimental. Again, little advantage results from increasing the magnetizing force beyond the point at which the permeability of the iron of the magnets begins to rapidly diminish. For iron of the same quality as that of the machine under consideration, a magnetizing force of 2.6×10^3 or 28.4 per centimetre is suitable. To get the same induction in other parts of the circuit, the diagram shows that for the air space a magnetizing force of 21×10^3 is required, for the pole pieces 0.1×10^3, for the armature 0.2×10^3, for the yoke 0.6×10^3, making a total force required of 24.5×10^3. Any alteration in the length or the area of any portion of the magnetic circuit entails a corresponding alteration in the magnetizing forces required for that portion, at once deducible from the diagram. Similar machines must have the magnetizing forces proportional to the linear dimensions, and, consequently, if the electromotive force of the machines is the same, the diameter of the wire of the magnet coils must be proportional to the linear dimensions. If the lengths of the several portions of the magnetic circuit remain the same, but the areas are similarly altered, the section of the wire must be altered in proportion to the alteration in the periphery of the section.

EXPERIMENT TO DETERMINE ν.

Around the middle of one of the magnet limbs a single coil of wire was taken, forming one complete convolution, and its ends connected to a Thomson's mirror galvanometer rendered fairly ballistic. If the circuit of the field magnets, while the exciting current is passing, be suddenly short-circuited, the elongation of the galvanometer is a measure of the total induction within the core of the limbs, neglecting the residual magnetization. If the short circuit be suddenly removed, so that the current again passes round the field-magnets, the elongation of the galvanometer will be equal in magnitude and opposite in direction.

Digitized by Google

The readings taken were :

Zero ..... 71 left.
Deflection..... .....332 " magnets made.
" .....196 right ; magnets short-circuited.
Hence, deflection to right — 267
" left — 261
Mean deflection — 264

To determine the induction through the armature, the leads to the ballistic galvanometer were soldered to consecutive bars of the commutator, connected to that convolution of the armature, which lay in the plane of commutation.

The readings taken were :

Zero..... .... 23 left.
Deflection..... .....223 " magnets made.
" .....176 } right ; magnets short-
" .....178 } [circuited.
Hence, deflection to right and left — 200

It thus appears that out of 264 lines of force passing through the cores of the magnet limbs at their centre, 200 go through the core of the armature, whence ν equals 1.32. The magnetizing current round the fields during these experiments was 5.6 amperes.

EXPERIMENTS ON WASTE FIELD NOT PASSING THROUGH ARMATURE.

As in the determination of ν a single convolution was taken around the middle of one of the limbs, and connected to the ballistic galvanometer ; the deflections, when a current of 5.6 amperes was suddenly passed through the fields or short-circuited, were :

Zero..... .... 34 left.
Deflection..... .148 " magnets made.
" .... 82 right ; magnets short-circuited.
Hence, deflection to right — 116
" left — 114
Mean deflection — 115

I. Four convolutions were then wound round the zinc plate and the cast-iron bed in a vertical plane, passing through the axis of the armature ; and the deflections noted :

Zero..... ..15 left.
Deflection..... .61 " magnets short-circuited.
" .....40 right ; magnets made.
Zero..... ..11 left.
Deflection..... ..... 64 " magnets short-circuited.
" ....36 right ; magnets made.
Hence, deflection to right — 55
" left — 46
and deflection to right — 47
" left — 53

in the two observations respectively, giving a mean = 50.25; or, reducing to one convolution, = 12.6.

II. A square wooden frame, 38 cms. × 38 cms., on which were wound 10 convolutions, was then inserted between the magnet limbs, with one side resting on the armature, and an adjacent side projecting 5 cms. beyond the coils on the limbs, or about 7·6 cms. beyond the cores of the limbs. The deflections were :

Zero.....34 left.
Deflection.....98 " magnets made.
" ....22 right ; magnets short-circuited.
" ....21 " " "
" .....81 left ; magnets made.
Hence, deflection to right — 56
" left — 64
and " right — 55
" left — 47

in the two observations respectively, giving a mean = 55 ; or reducing to one convolution, = 5.5.

III. The same frame was raised a height of 6.35 cms. above the armature in a vertical plane. The deflections were :

Zero..... 21 left.
Deflection..... 98 " magnets made.
Zero..... ..... 35 left.
Deflection.... ..... 8 right ; magnets short-
Hence, deflection to left — 50 [circuited.
" right — 48
and mean deflection — 46.5
or, reducing to one convolution — 4.6

IV. The same frame was again lowered on the armature and pushed inwards so as to lie symmetrically within the space between the limbs. The deflections were :

Zero..... 32 right.
Deflection..... 112 " magnets made.
" ..... 48 left ; magnets short-circuited.

giving a mean of 80 ; or, reducing to one convolution = 8.0.

Let G represent the leakage through a vertical area bounded by the armature, and a line 7.6 cms. above the armature, and of the same width as the pole pieces ; let R be the remainder of the leakage between the limbs ; then II. and III. give

$$\frac{2}{3}G + \frac{2}{3}R = 5.5$$

$$\frac{2}{3}R = 4.6$$

whence

$$G = 1.35$$
$$R = 6.9$$

Again IV. gives

$$\frac{5}{6}(G + R) = 8.0$$

therefore

$$G + R = 9.6$$

which shows an agreement as near as might be expected considering the rough nature of the experiment, and that the leakage is assumed uniform over the areas considered. We take

$$G = 1.6$$
$$R = 8.0$$

Reducing these losses to percentages we have

$G = \frac{1.6}{115}$	= 1.4 per cent.
$R = \frac{8.0}{115}$	= 7.0 "
And from I. the leakage through the zinc plate and iron base.....	= 10.3 "
Hence the two gaps account for.....	2.8 "
The zinc plate and iron base account for	10.3 "
And the area between the limbs.....	7.0 "
Making a total loss accounted for....	20.1 "
Out of an observed loss of	24.24 "

The leakage through the shaft and from pole piece to yoke, and one pole piece to the other by exterior lines, will account for the remainder.

EFFECT OF THE CURRENT IN THE ARMATURE.

The currents in the fixed coils around the magnets are not the only magnetizing forces applied in a dynamo machine ; the currents in the moving coils of the armature have also their effect on the resultant field. There are in general two independent variables in a dynamo machine, the current around the magnets and the current in the armature, and the relation of E. M. F. to currents is fully represented by a surface. In well-constructed machines the effect of the latter is reduced to a minimum, but it can be by no means neglected. When a section of the armature coils is commutated it must inevitably be momentarily short-circuited, and if at the time of commutation the field in which the section is moving is other than feeble, a considerable current will arise in that section, accompanied by waste of power and destructive sparking. It may be well at once to give an idea of the possible magnitude of such effects. In the machine already described the mean E. M. F.

Digitized by Google

in a section of the armature at a certain speed may be taken as 6 volts, its resistance 0.000995 ohm. Setting aside, then, for the moment, questions of self-induction, if a section were commutated at a time when it was in a field of one-tenth part of the mean intensity of the whole field there would arise in that section, whilst short-circuited by the collecting brush, a current of 600 amperes, four times the current when the section is doing its normal work. The ideal adjustment of the collecting brushes is such that during the time they short-circuit the sections of the armature the magnetic forces shall just suffice to stop the current in the section, and to reverse it to the same current in the opposite direction.

Suppose the commutation occurs at an angle λ in advance of the symmetrical position between the fields, and that the total current through the armature be C, reckoned positive in the direction of the resultant E. M. F. of the machine, *i. e.*, positive when the machine is used as a generator of electricity. Taking any closed line through magnets and armature, symmetrically drawn as ABCDEFA, fig. 4, it is obvious that the line integral of magnetic force is diminished by the current in the armature included between angle λ in front and angle λ behind the plane of symmetry. If m be the number of convolutions of the armature, the value of this magnetizing force is $4\pi C \frac{m}{2} \frac{2\lambda}{\pi}$ $= 4\lambda m C$ opposed to the magnetizing force of the fixed coils on the magnets. Thus, if we know the lead of the brushes and the current in the armature we are at once in a position to calculate the effect on the electromotive force of the machine. A further effect of the current in the armature is a material disturbance in the distribution of the induction over the bored face of the pole piece ; the force along BC, fig. 4, is by no means equal to that along DE. Draw the closed curve BCGHB, the line integral along CG and HB is negligible. Hence the difference between force HG and BC is equal to $4\pi C \frac{m}{2} \frac{\kappa}{\pi} = 2\kappa m C$ where κ is the angle COG. This disturbance has no material

Fig. 4

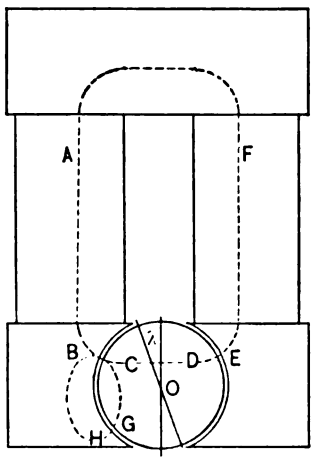

effect upon the performance of the machine. But the current in the armature also distorts the arrangement of the comparatively weak field in the gap between the pole pieces, displacing the point of zero field in the direction of rotation in a generator and opposite to the direction of rotation in a motor ; and it is due to this that the non-sparking point for the brushes is displaced. A satisfactory mathematical analysis of the displacement of the field in the gap between the pole pieces by the current in the armature would be more troublesome than an *á priori* analysis of the distribution of field in this space when the magnet current is the only magnetizing force. Owing to the fact that the armature is divided into a finite number of sections there is a rapid diminution of the displacement of the field during the time that a section is being commutated, the diminution being recovered whilst the brush is in contact with only one bar of the commutator. The field thus oscillates slightly, owing to the disturbance caused by reversing the direction of the current in the successive sections of the armature. The number of oscillations in a Gramme armature or in a Siemens' armature with an even number of sections will be ρm, where ρ is the number of revolutions per second, but in a Siemens' armature with an odd number of sections it will be $2\rho m$.* This oscillation of the field is only another way of expressing the effect of the self-induction of the section, but it must be remembered that if the self-induction, multiplied by change of current, is expressed as a change in the field we must omit self-induction as a separate term in our electrical equations. The precise lead to be given to the brushes in order to avoid sparking in any given case depends on many circumstances—the form and extent of the pole pieces, the number of sections in the armature, and the duration of the short circuit which the brushes cause in any section of the armature. The adjustment of the position of the collecting brushes is generally made by hand at the discretion of the attendant, and is in some cases fixed once for all to suit an average condition of the machine. We shall therefore, treat λ the lead as an independent variable, controlled by the attendant.

Let I be total induction through the armature, $I + I'$ total induction through the magnets, I' being the waste field. Let C be current in armature, c in the magnets. Let $g I'$ be the line integral of magnetic force from a point on one pole piece to a point on the other, the line being drawn external to the armature, g will be approximately constant. Omitting as comparatively unimportant the magnetizing force in the pole pieces and iron core of the armature we have the following equations :—

$$4\lambda m C + 2 l_2 \frac{I}{A_2} - g I' = 0$$

$$4\lambda m C + 2 l_2 \frac{I}{A_2} + l_2 f\left(\frac{I + I'}{A_2}\right) = 4\pi n c.$$

When $C = 0$ we observed

$$I = \frac{1}{\nu - 1} I'$$

whence

$$g = \frac{1}{\nu - 1} \frac{2 l_2}{A_2}$$

eliminating I'

$$\frac{2 l_2}{\nu A_2}\left(\nu I + 4\lambda m C \frac{A_2}{2 l_2}(\nu - 1)\right) + l_2 f$$

$$\left\{\frac{\nu I + 4\lambda m C \cdot \frac{A_2}{2 l_2}(\nu - 1)}{A_2}\right\} = 4\pi n c + 4\lambda m C \frac{\nu - 1}{\nu}$$

$$-4\lambda m C = 4\pi n c - 4\lambda m C \frac{1}{\nu}.$$

The characteristic curve when $C = 0$ being $I = F(4\pi n c)$ we may write the above as the equation of the characteristic surface thus

$$I + \frac{\nu - 1}{\nu} 4\lambda m C \frac{A_2}{2 l_2} = F\left(4\pi n c - \frac{4\lambda m C}{\nu}\right).$$

In applying this equation it must not be forgotten that

* Added Aug. 17.—Armatures with an odd number of convolutions are open to one theoretical objection, which would be a practical one if the number of convolutions were very small. The $2m + 1$ convolutions constitute in themselves a closed circuit, having a resistance four times the mean actual resistance of the armature measured between the collecting brushes. When any one convolution is exactly in the middle of the field the E. M. F. of the other $2m$ convolutions exactly balance, so that there is upon the closed circuit an E. M. F. due to the single convolution somewhat in excess of $\frac{1}{m}$th part of the actual E. M. F. of the machine. Thus there will be an alternating E. M. F. around the closed circuit of the armature capable of causing a considerable waste of power. This waste is materially checked by the self-induction of the circuit.

Digitized by Google

the E. M. F. of the machine cannot be determined from I unless the commutation occurs at such a time that the coil being commutated embraces all, or nearly all, the lines of induction in the armature.

This equation enables the characteristic surface to be constructed from the characteristic curve. Let O L $= 4\pi n c$, L M $= 4 m \lambda c$, draw M K so that $\frac{K L}{L M} = \frac{1}{\nu}$, through K draw ordinate K R meeting characteristic curve in R, draw R Q parallel to O L meeting ordinate Q L in Q, draw Q S parallel to L M; draw Q P so that $\frac{P S}{S Q} = \frac{\nu - 1}{\nu} \cdot \frac{A_2}{2 l_2}$. Then P is a point on the characteristic surface.

Fig. 5

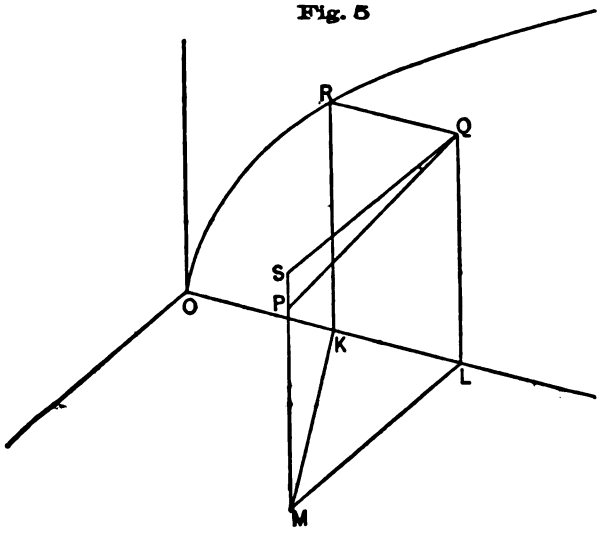

A very important problem is to deduce the characteristic curve of a series wound machine from the normal characteristic; in this case $c = C$, and we have

$$I + \frac{\nu - 1}{\nu} 4 \lambda m C \frac{A_2}{2 l_2} = F\left\{\left(4\pi n - \frac{4 \lambda m}{\nu}\right) C\right\}$$

taking P R as ordinate of any point in the normal characteristic, cut off Q R equal to $\frac{\nu - 1}{\nu} 4 \lambda m C \frac{A_2}{2 l_2}$, that is, draw O Q so that

$$\tan Q O x = \frac{\nu - 1}{\nu} 4 \lambda m C \frac{A_2}{2 l_2} \Big/ 4\pi \left(n - \frac{m \lambda}{\nu \pi}\right) C$$

$$= \frac{\nu - 1}{\nu} \frac{A_2}{2 l_2} \frac{\lambda m}{\pi n - \frac{\lambda m}{\nu}}$$

then P Q will represent the induction corresponding to magnetizing force $4\pi \left(n - \frac{m \lambda}{\nu \pi}\right) C$.

Fig. 6

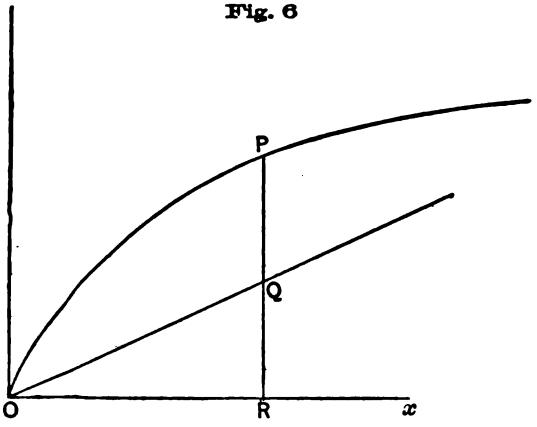

It is noteworthy that as the current C, and, therefore, OR increases, PQ, the induction, will attain a maximum and afterwards diminish, vanish, and become negative. That in series wound machines the E. M. F. has a maximum value has been many times observed. The cause lies in the existence of a waste field not passing through the armature, and in the saturation of the magnet core.

The effect of the current in the armature on the potential between the brushes of any machine is the same as that of an addition to the resistance of the armature proportional to the lead of the brushes, and to the ratio of the waste field to the total field, combined with that of taking the main current $\frac{m\lambda}{\nu\pi}$ times round the magnets in direction opposite to the current c. The preceding investigation tells the whole story of a dynamo machine, excepting only the relation of λ to C in order that the brushes may be so placed as to avoid sparking. The only constant or function which has to be determined experimentally for any particular machine is ν, the ratio of total to effective field, all the rest follows from the configuration of the iron and the known properties of the material.

The following illustrations of the effect of the current in the armature and the lead of the brushes are interesting. In both cases the magnet coils are supposed to be entirely disconnected so that c is zero. First, let λ be negative, short circuit the brushes and drive the machine at a certain speed, a large current will be produced, the current in the armature itself forming the magnet.† Second, let λ be positive, cause a current to pass through the armature, the armature will turn in the positive direction and will act as a motor capable of doing work. In either case, particularly the former, such use of the machine would not be practical owing to violent sparking on the commutator. The following is a further illustration of the formula given above. If we could put up with the sparking which would ensue, it would be possible to make λ negative in a generator of electricity, and thereby obtain by the reactions of the armature itself all the results usually obtained by compound winding.

EFFICIENCY EXPERIMENTS.

Having discussed the relations subsisting between the configuration of the magnetic circuit of a dynamo machine and the induction obtained for given magnetizing forces, and having compared the results obtained by direct calculation with the results of actual observation on a particular machine, the construction of which we have described at length, it appeared of importance to determine the efficiency of the machine under consideration as a converter of energy, when used either as a generator of electricity or as a motor. An accurate determination of the mechanical power transmitted to a dynamo by a driving belt, or of the power given by a motor presents formidable experimental difficulties. Moreover, if the mechanical power absorbed in driving the dynamo be measured directly, any error in measurement will involve an error of the same magnitude in the determination of the efficiency. To avoid this difficulty, we employed the following device.

Let two dynamos, approximately equal in dimensions and power, have their shafts coupled by a suitable coupling, which may serve also as a driving pulley; and let the electrical connections between the dynamos be made so that the one drives the other as a motor. If the combination be driven by a belt passing over the coupling pulley, the power transmitted by the belt is the waste in the two dynamos and the connections between them. By suitably

† Added Aug. 17.—This experiment was tried upon a dynamo machine of construction generally similar to that shown in figs. 3, 4, 5, plate 18, but with an armature of half the length intended in normal work to give 400 amperes 50 volts at 1,000 revolutions. The magnet coils were disconnected, and the terminals of the armature were connected through a Siemens' electro-dynamometer, and the machine was run at 1,380 revolutions. When the brushes were placed in the normal position ($\lambda = 0$) the current due to residual magnetism was 52 amperes. By giving the brushes a small positive lead the current was reduced to nearly zero. By giving the brushes a small negative lead a current of over 234 amperes, the maximum measured by the dynamometer, was obtained, and by varying the lead it was easy to maintain a steady current of any desired amount.

Digitized by Google

varying the magnetic field of one of the dynamos, the power passing between the two machines can be adjusted as desired. If, then, the electrical power given out by the generator is measured, and also the power transmitted by the belt, the efficiency of the combination can be at once determined. By this arrangement the measurement, which

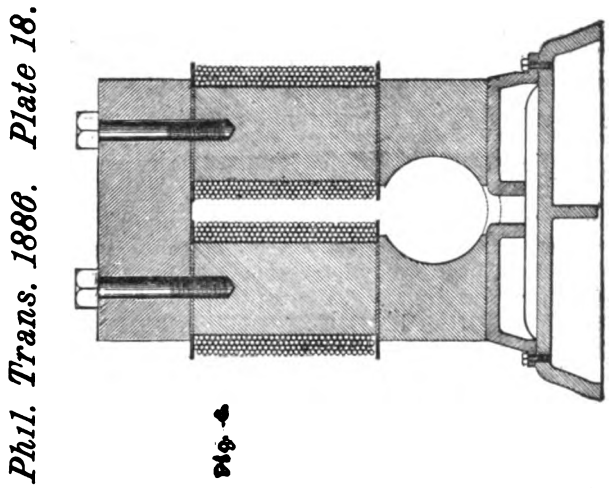

Fig. 4.

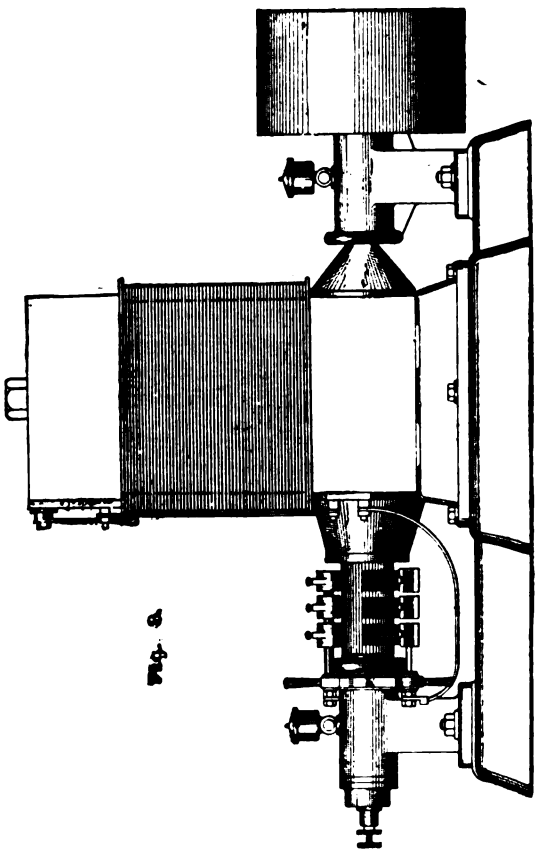

Fig. 6.

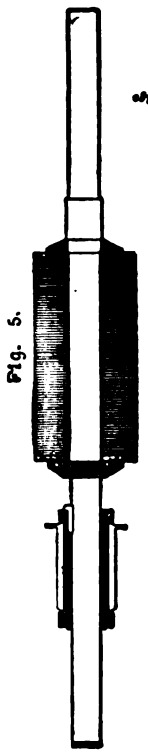

Fig. 5.

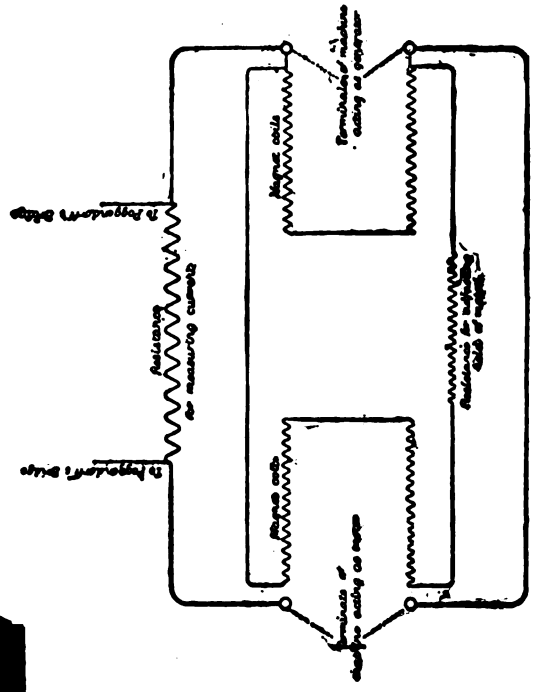

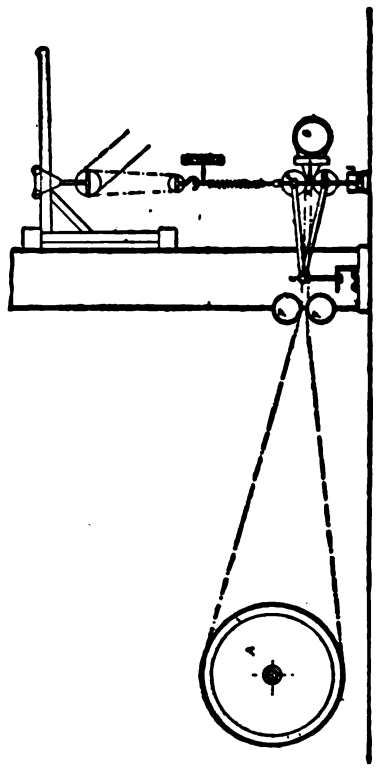

presents experimental difficulties, viz., the power transmitted by the belt, is of a small quantity. Consequently, even a considerable error in the determination has but a small effect on the ultimate result. On the other hand, the measurement of the large quantity involved, viz.. the electrical power passing between the two machines, can without difficulty be made with great accuracy.

The second machine was similar in all respects to that already described, and each is intended for a normal output of 110 volts, 320 amperes, at a speed of 780 revolutions per minute.

The power transmitted by the belt was measured by a dynamometer of the Hefner-Alteneck type, the general arrangement being as shown in the diagram, plate 18. A is the driving pulley of the engine, B the driven coupling of the dynamos; D, D are the guide pulleys of the dynamometer carried on a double frame turning about the fulcrum C, and supported by a spiral spring, the suspension of which can be varied by a pair of differential pulley-blocks attached to a fixed support overhead. When a reading is made the suspension of the spring is adjusted until the index of the dynamometer comes to a fiducial mark on a fixed

Phil. Trans. 1886. Plate 18.

J. & E. Hopkinson.

Digitized by Google

scale, the extension of the spring is then read by a second index attached to its upper extremity ; F, F are two fixed guide pulleys of the same diameter as the pulleys D, D, and having the same distance between their centres, in order that the two portions of the belt may be parallel and the sag as far as possible taken up. The normal from C to the centre line of either portion of the belt between the pulley A and the guide pulleys = 31.9 cms. The normal from C to the centre line of either of the parallel portions of the belt = 2.4 cms.; and from C to the centre line of the spring = 92.7 cms.

Take moments about C ; then

$$\text{Tension of the belt} = \frac{92.7}{34.3} \times \text{tension of spring.}$$
$$= 2.7 \times \text{tension of spring.}$$

Also the diameter of the pulley B = 33.6 cms. and the thickness of the belt = 1.6 cm.

Hence the velocity of the centre of the belt in centimetres per second = 1.845 × revolutions of dynamo per minute, and, therefore,

Power transmitted by the belt in ergs per second
$= 2.7 \times 1.845 \times 981 \times$ tension of spring × revolutions per minute,

assuming the value of g to be 981.

We may more conveniently express the power in watts (= 10^7 ergs per second), and write

Power in watts = .0004887 × tension of spring × revolutions per minute.

The potential between the terminals of the generator was measured by one of Sir William Thomson's graded galvanometers, previously standardized by a Clark's cell, which had been compared with other Clark's cells, of which the electromotive force was known by comparison with Lord Rayleigh's standard. The current between the two machines was measured by passing it through a known resistance, the difference of potential between the ends of the resistance being determined by direct comparison with the Clark's standard cell, according to Poggendorff's method. As experiments were made with currents of large magnitude, it was important that the temperature coefficient of the resistance should be as low as possible. To this end we found a resistance-frame constructed of platinoid wire of great value. The temperature coefficient of this alloy is only 0.021 per cent. per degree Centigrade. (Proc. Roy. Soc., vol. 38, p. 265, 1885.)

The resistances of the armatures and magnets of the two machines are as follows :—

		Ohms.
Generator.....	armature.....	0.009947
	magnets.....	16.93
Motor.....	armature.....	0.009947
	magnets.....	16.44

The resistance of the leads connecting the two machines was 0.00205 ohm, and of the standard resistance 0.00586 ohm.

In all determinations of resistance, the value of the B. A. ohm was taken as 0.9867 × 10^9 c. g. s. units, according to Lord Rayleigh's determination.

The diagram shows the electrical connections between the two machines with the rheostat r inserted in the magnets of the motor dynamo.

In order to ascertain the friction of bending the belt round the pulley B, and of the journals of the dynamo, a preliminary experiment was made with the dynamometer. The combination was run at a speed of 814 revolutions per minute with the dynamos on open circuit and the tension of the spring observed—9979 grammes. The engine was then reversed, and the dynamos run at the same speed and the tension of the spring again observed—3629 grammes. The difference of the two readings gives twice the power absorbed in friction, viz.: 1262 watts for the two machines, or 631 watts per machine. This is excluded entirely from the subsequent determinations of efficiency, as being a quantity dependant on such arbitrary conditions as the lubrication of the journals, the weight of the belt, and the angle it makes with the horizontal.

TABLE I.

	I. Revolutions per minute.	II. Grammes	III. Watts.	IV. Volts.	V. Amperes.	VI. Ohms.	VII. Watts.	VIII. Watts.	IX. Watts.	X. Watts.	XI. Watts.	XII. Watts.	XIII. Watts.	XIV. Watts.
1	810	8,392	3324	129.1	21.6	1.39	13	4	934	861	110	4,720	676	5,396
2	801	9,299	3642	127.2	72.0	1.39	75	62	955	770	130	10,678	825	11,503
3	811	11,113	4413	125.8	150.0	2.72	267	223	935	825	294	21,014	935	21,949
4	808	10,433	4116	124.4	186.0	2.72	394	344	914	695	387	25,256	691	25,947
5	792	10,660	4124	116.5	211.0	2.72	501	445	801	608	454	26,592	657	27,249
6	798	16,897	6595	110.6	351.0	4.59	1317	1231	722	581	1099	41,567	822	42,389
7	764	17,690	6604	110.12	358.0	4.09	1360	1274	716	472	1117	42,086	831	42,917
8	766	17,804	6669	110.6	360.0	4.59	1335	1296	722	452	1151	42,451	856	43,307
9	778	16,556	6300	102.3	369.0	4.09	1443	1361	618	396	1176	40,304	653	40,957
10	756	20,412	7537	96.8	446.0	4.59	2070	1978	554	348	1668	46,242	459	46,701
11	808	9,526	4758	119.3	36.8	2.72	394	344	855	636	211	7,011	1009	8,020
12	802	.....	1512	113.5	No current	.....	.....	.....	.....	.....	.....	.....	756	.....
13	814	3,175	1262	.....	.....	.....	.....	.....	.....	.....	.....	.....	631	.....

In table i., column i. is the speed of the dynamos ; column ii. is the reading of the spring in grammes ; column iii. is the power transmitted by the belt in watts ; column iv. is the potential at the terminals of the generator ; column v. is the current passing in the external circuit between the two machines ; column vi. is the resistance introduced into the magnets of the motor by the rheostat ; column vii. is the power absorbed in the armature of the generator ; column viii. is the power absorbed in the armature of the motor ; column ix. is the power absorbed in the magnets of the generator ; column x. is the power absorbed in the magnets of the motor ; column xi. is the power absorbed in the connecting leads between the two dynamos, in the rheostat resistance r, and in the standard resistance used for measuring the current ; column xii. is the total electrical power developed in the generator ; column xiii. is half the power absorbed by the combination less the known losses in the armatures, magnets, and external connections of the two machines ; column xiv. is the total mechanical power given to the generator, being the sum of the powers given in columns xii. and xiii.

TABLE II.

	I. Per cent.	II. Per cent.	III. Per cent.	IV. Per cent.	V. Per cent.	VI. Per cent.
1	0.25	18.23	12.52	69.0	71.44	40.44
2	0.65	8.30	7.17	83.88	69.9	58.63
3	1.235	4.27	4.27	90.22	89.68	79.9
4	1.52	3.53	2.66	92.29	92.78	85.63
5	1.84	2.94	2.415	92.81	93.70	86.51
6	3.11	1.70	1.94	93.25	93.79	87.45
7	3.17	1.66	1.94	93.23	93.37	87.05
8	3.08	1.67	1.98	93.27	93.99	87.26
9	3.525	1.51	1.59	93.37	94.02	87.49
10	4.447	1.20	1.00	93.39	93.62	87.43
11	0.31	3.53	2.66	92.29	92.78	85.63

In table ii. the percentage losses in the armature and magnets of the generator are given, as also the sum of all other losses as obtained from column xiii. in the foregoing table ; also the percentage efficiency of the generator, of the motor, and of the double conversion. Column i. is the percentage loss in the generator armature ; column ii. is

Digitized by Google

J. & E. Hopkinson. *Phil. Trans. 1886. Plate 19.*

Sheet III.

SYNTHESIS OF CHARACTERISTIC CURVE OF MACHINE WITH GRAMME ARMATURE.

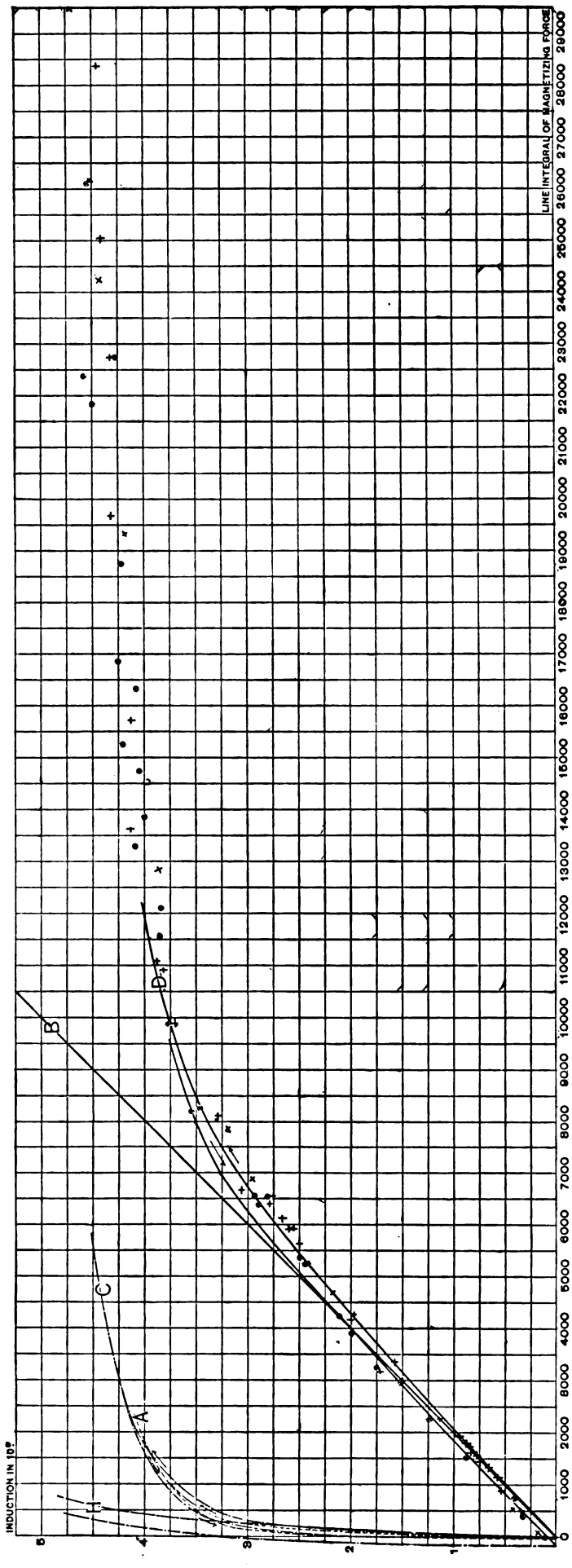
Observed results { No. 1 Machine: + ascending. • descending.
No. 2 Machine: × ascending. • descending.
A. Armature. B. Air Space. C. Magnets. D. Deduced curve. H. Pole pieces.
INDUCTION IN 10⁸
LINE INTEGRAL OF MAGNETIZING FORCE
0 1000 2000 3000 4000 5000 6000 7000 8000 9000 10000 11000 12000 13000 14000 15000 16000 17000 18000 19000 20000 21000 22000 23000 24000 25000 26000 27000 28000 29000
1 2 3 4 5
A
B
C
D
H

the percentage loss in the generator magnets; column iii. is the percentage sum of all other losses in the generator; column iv. is the percentage efficiency of the generator; column v. is the percentage efficiency of the motor; column vi. is the percentage efficiency of the double conversion.

In this series of experiments in all cases, from Nos. 1 to 10 inclusive, the brushes, both of the generator and motor, were set at the non-sparking point; but in No. 11 no lead was given to the brushes of the generator, and, consequently, there was violent sparking throughout the duration of the experiment.

In No. 12, the magnets were separately excited with a current giving 113.5 volts across their terminals. The power absorbed must be due entirely to local currents in the core of the armature, and the energy for the reversal of magnetization of the core twice in every revolution of the armature.

No. 13 gives the results of the experiments on the friction of the bearings and in bending the belt already referred to.

It will be observed that the figures in column xiii. are calculated by deducting the power absorbed in the armatures and magnets, and extraneous resistances from the total power given to the combination as measured by the dynamometer. They must therefore include all the energy dissipated in the core of the armature, whether in local currents or in the reversal of its magnetization; also the energy dissipated in local currents in the pole pieces, if such exist; also the energy spent in reversing the direction of the current in each convolution of the armature as they are successively short-circuited by the brushes. Further, it will include the waste in all the connections of the machine from the commutator to its terminals and the friction of the brushes against the commutator. A separate experiment was made to determine the amount of this last constituent, but it was found to be too small to be capable of direct measurement by the dynamometer. Moreover, from the manner in which the figures in this column are deduced, any error in the dynamometric measurement will appear wholly in them. Since, undoubtedly, the first two components enumerated are the most important, and the conditions determining their amount are practically the same throughout the series, the close agreement of the figures in the column are a fair criterion of the accuracy of the observations. Probably 100 watts is the limit of error in any of the measurements. Such an error would affect the determination of the efficiency when the machines were working up to their full power to less than ½ per cent.

It has been assumed that the sum of these losses is equally divided between the two machines. This will not accurately represent the facts, as the intensities of the fields and the currents

Digitized by Google

Phil. Trans. 1886. Plate 20.

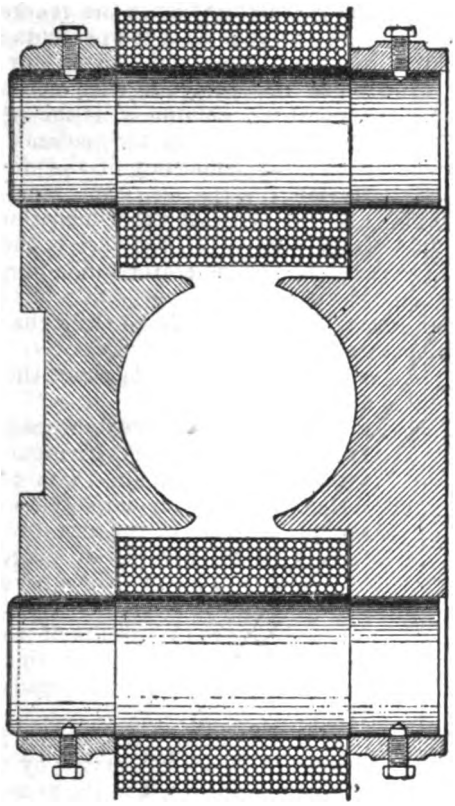

Fig. 2.

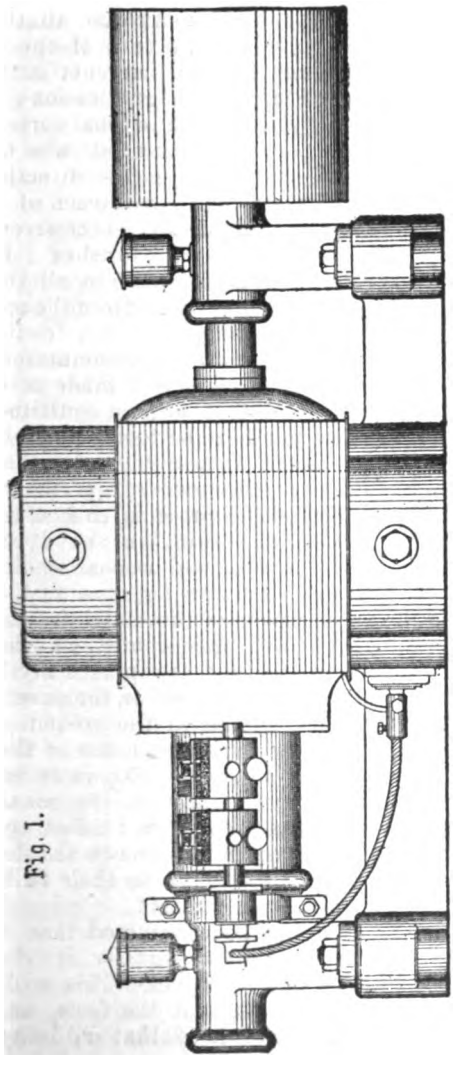

Fig. 1.

J. & E. Hopkinson.

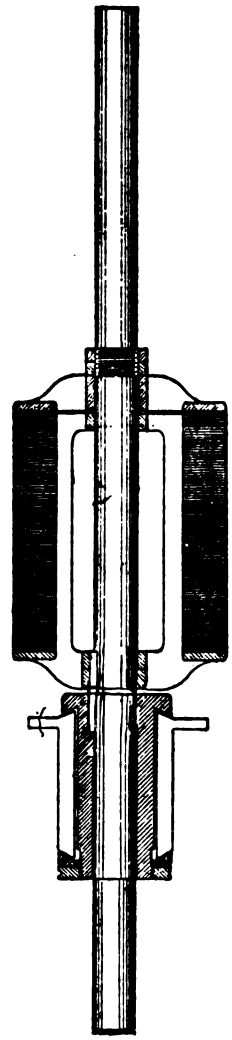

Fig. 3.

passing through the armatures differ to some extent in the two machines. The inequality, however, cannot amount to a great quantity, and if it diminishes the efficiency of the generator it will increase the efficiency of the motor by a like amount, and contrariwise. In No. 11 of the series the effect of the sparking at the brushes of the generator is very marked, the power wasted amounting to at least 250 watts.

If it be assumed that the dissipation of energy is the same whether the magnetization of the core is reversed by diminishing and increasing the intensity of magnetization without altering its direction, or whether it is reversed by turning round its direction without reducing its amount to zero, a direct approximation may be made to the value of this component. (J. Hopkinson, Phil. Trans., vol. 176, 1885, p. 455.)

The core has about 16,400 cubic centims. of soft iron plates, hence loss in magnetizing and demagnetizing when the speed is 800 revolutions per minute $= 16{,}400 \times \frac{800}{60} \times 13{,}356$ ergs per second $= 292$ watts.

Referring to table ii. it appears that the efficiency approaches a maximum when the current, passing externally between the two machines, is about 400 amperes. Let c be the current in the armature, ρ its resistance, w the power absorbed in all parts of the machine other than the armature, then, if the speed is constant, the efficiency is approximately $\frac{EC - w - C^2\rho}{EC}$, where E is the electromotive force. This is a maximum when $\frac{w}{C} + C\rho$ is a minimum, which occurs when $w = C^2\rho$; when the loss in the armature is equal to the sum of all other losses. For the machines under consideration the experimental results verify this deduction. But in actual practice the rate of generation of heat in the armature conductors, when a current of 400 amperes was passed for a long period, would be so great as to trench upon the margin of safety desirable in such machines. Of the total space, however, available for the disposition of the conductors only about one-fourth part is actually occupied by copper, the remainder being taken up with insulation, and the interstices left by the round wire. If the space occupied by the copper could be increased to three-fourths of the total space available, while the cooling surface remained the same, the current could be increased 75 per cent. and the efficiency increased 1.3 per cent. approximately, as all losses other than that in the armature wires would not be materially altered.

The loss in the magnets is also susceptible of reduction. It has already

Digitized by Google

been shown that for a given configuration of the magnetic circuit and a given electromotive force the section of the wire of the magnet coils is determinate. The length is, however, arbitrary, since within limits the number of ampere convolutions is independent of the length. An increase in the length will cause a proportionate diminution in the power absorbed in the magnet coils. If the surface of the magnets is sufficient to dissipate all the heat generated, then the length of wire is properly determined by Sir William Thomson's rule that the cost of the energy absorbed must be equal to the continuing cost of the conductor.

APPENDIX.‡

Since the reading of the present communication, experiments have been tried on machines having armatures wound on the plan of Gramme and with differently arranged magnets, the experiments were carried out in a closely similar manner to that already described.

DESCRIPTION OF MACHINES.

The construction of these machines is shown in plate 20, in which figure 1 shows an elevation, figure 2 a section through the magnets, figure 3 a longitudinal section of the armature. It will be observed that the magnetic circuit is divided. The pole pieces are of cast iron and are placed above and below the armature, and are extended laterally. The magnet cores are of wrought iron of circular section and fit into the extensions of the cast iron pole pieces, so that the area of contact of the cast iron is greater than the area of section of the magnet. The magnetizing coils consist of 2196 convolutions on each limb of copper wire, No. 17, B. W. G., in No. 1 machine, and 2232 convolutions in No. 2 machine. The pole pieces are bored to receive the armature leaving a gap on either side subtending an angle of 41° at the axis.

The bearings are carried upon an extension of the lower pole piece.

The following table gives the principal dimensions of the magnets in No. 1 machine :—

	Cms.
Length of magnet limbs between pole pieces	26.0
Diameter of magnet limb	8.6
Bore of fields	25.7
Width of pole piece parallel to the shaft	24.1
Width of gap between poles	8.6

The armature is built up of plates as in the machine already described, and is carried from the shaft by a brass frame between the arms of which the wires pass.

The principal dimensions are as follows :—

	Cms.
Diameter of core	24.1
Diameter of hole through core	14.0
Length of core over end plates	24.1

The core is wound on Gramme's principle with 160 convolutions, each consisting of a single wire, No. 10, B. W. G., the wire lying on the outside of the armature in a single layer. The commutator has 40 bars.

This dynamo is compound wound, and is intended for a normal output of 105 volts 130 amperes, at a speed of 1050 revolutions per minute. The resistance of the armature is 0.047 ohm, and of the magnet shunt coils 53.7 ohms.

There is here no yoke, and consequently A_4 and l_4 do not appear in the equation.

It is necessary to bear in mind that the magnetizing force is that due to the convolutions on one limb, and that the areas are the sums of the areas of the two limbs. In calculating induction from E. M. F. it is also necessary to remember that two convolutions in a Gramme count as one in a Hefner-Alteneck armature.

A_1 ;—the section of the core is 245 sq. cms., allowances for insulation reduce this to 220.5 sq. cms.

l_1 ;—this is assumed to be 10 cms., but it will be seen that an error in this value has a much more marked effect on the characteristic in this machine than in the other.

A_2 ;—the angle subtended by the bored face of the pole pieces is 139°, the mean of the radii of the pole pieces and the core is 12.45 cms. Hence the area of 139° of the cylinder of this radius is 768.3 sq. cms., add to this a fringe of a width 0.8 of the distance from core to pole pieces, as already found necessary for the other machine, and we have 839.5 sq. cms. as the value of A_2.

l_2 is 0.8 cm.

A_3 is 365 sq. cms. (*i. e.*, the area of two magnet cores).

l_3 is 26.0 cms.

A_5 is taken to be 955 sq. cms., viz., double the smallest section of the pole piece.

l_5 is a very uncertain quantity; it is assumed to be 15 cms.

The expression already used requires slight modification. Inasmuch as the pole pieces are of cast iron a different function must be used. Different constants for waste field must be used for the field, the pole pieces and the magnet core. We write

$$4\pi n c = {}_1 f\left(\frac{I}{A_1}\right) + 2\,{}_2\frac{\nu_2 I}{A_2} + l_3 f\left(\frac{\nu_3 I}{A_3}\right) + 2\,l_5 f'\left(\frac{\nu_5 I}{A_5}\right)$$

the function f' is taken from Hopkinson, Phil. Trans., vol. 176 (1885), p. 455, plate 52. ν_2, ν_3, and ν_5 were determined by experiment as described below, their values are

$$\nu_2 = 1.05$$
$$\nu_3 = 1.18$$
$$\nu_5 = 1.49$$

Comparing the curves on plate 17 with that on plate 19, the most notable difference is that in the present case the armature core is more intensely magnetized than the magnet cores. No published experiments exist giving the magnetizing force required to produce the induction here observed in the armature core, amounting to a maximum of 20,000 per sq. cm. We might, however, make use of such experiments as the present to construct roughly the curve of magnetization of the material; thus we find that with this particular sample of iron a force of 740 per cm. is required to produce induction 20,000 per sq. cm.; this conclusion must be regarded as liable to considerable uncertainty.

The observations on the two machines are plotted together, but are distinguished from each other as indicated. They are unfortunately less accurate than those of plate 17, and are given here merely as illustrating the method of synthesis.

EXPERIMENTS TO DETERMINE ν_2, ν_3, AND ν_5.

The method was essentially the same as is described on pp. 52 and 53, and was only applied to No. 1 machine. Referring to figure 7 a wire AA was taken four times round the middle of one limb of the magnet, a known current was suddenly passed round the magnets, the elongation of the reflecting galvanometer was observed, it was found to be 214 scale divisions, giving 107 as the induction through the two magnet limbs in terms of an arbitrary unit. The coil was moved to the top of the limb as at BB—the elongation was reduced to 206 or 103 for the two limbs. We take the mean induction in the magnet to be 105. A wire was taken three times round the whole armature in a horizontal plane as at CC; the elongation observed was 222 divisions or 74 in terms of the same units. A wire was taken four times round one-half of the armature as at DD; the elongation was 141, or induction in the iron of the armature 70.5, whence we have

$$\nu_2 = \frac{74}{70.5} = 1.05.$$

It may be well to recall here that ν_2 is essentially

‡ Added Aug. 17.

Digitized by Google

dependent on the intensity of the field, strictly the line B on plate 19 should not be straight but slightly curved.

Four coils were taken round the upper pole piece at EE; the elongation was 159, giving 79.5 on the two sides. Coils at FF give a higher result, 87.5, owing to the lines of induction which pass round by the bearings of the machine, and across to the upper ends of the magnets—ν_5 is taken to be $\frac{83.5}{70.5} = 1.18$.

TABLE III.

	I. Degrees.	II. Revolutions.	III. Grammes.	IV. Watts.	V. Volts.	VI. Amperes.	VII. Ohms.	VIII. Watts.	IX. Watts.	X. Watts.	XI. Watts.	XII. Watts.	XIII. Watts.	XIV. Watts.	XV. Watts.	XVI. Watts.	XVII. Watts.
1	17.5*	1098	7711	4419	100.1	139.0	coty	955	895	372	0	497	464	657	16,395	289	16,684
2	5°	1094	2722	1554	103.8	41.2	18.8	105	78	400	188	55	41	148	5,015	294	5,309
3*	0°	1144	1814	1083	104.7	7.85		11	3	395	409	6	1	2	1,637	128	1,765

* In this experiment the direction of the current had become reversed, and No. 2 machine was generator.

TABLE IV.

	Generator armature.	Generator shunt coils.	Generator series coils.	Other Losses.	Efficiency of generator.	Efficiency of motor.	Efficiency of double conversion.
1	5.8	2.2	3.0	1.9	87.1	89.0	77.5
2	2.0	7.5	1.0	5.5	84.0	92.0	77.7

The method and instruments were those already described, excepting that the current was measured by a Thomson's graded galvanometer, which had been standardized against a Clark's cell in the position and at the time when used. The resistance of leading wires and galvanometer was 0.034 ohm, the series coils introduced for compounding the machines were also brought into use, and the losses due to their resistance find a place in columns xii. and xiii. in table iii., in which column i. is lead of brushes of the dynamo, positive for the generator, negative for the motor; column ii., revolutions per minute; column iii., deflection of spring in grammes; column iv., watts by dynamometer; column v., volts at terminals of generator; column vi., amperes in external circuit; column vii., rheostat resistance; column viii., watts in generator armature; column ix., watts in motor armature; column x., watts in generator shunt magnet coils; column xi., watts in motor shunt; column xii., watts in generator series magnet coils; column xiii., watts in motor series; column xiv., watts in external resistances; column xv., total electrical power of generator; column xvi., half the sum of losses unaccounted for; column xvii., total mechanical power applied to generator.

Fig. 7

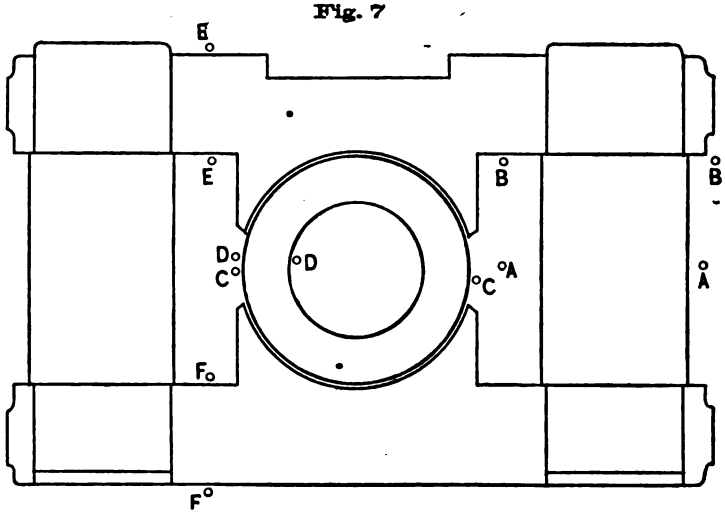

Table iv. gives the losses and efficiencies as percentages in exactly the same way as in table ii., excepting that another column is introduced for the loss in the series coils of the magnets of the generator.

The core of the armature contains about 6500 cub. cms. of iron. Hence energy of magnetizing and demagnetizing when the speed = 1100 revolutions per minute = $6500 \times \frac{1100}{60} \times 13{,}356$ in ergs per second = 159 watts.

In conclusion, we desire to express our indebtedness to Messrs. Mather and Platt, by whom the machines we have used were manufactured, and who, in placing the same at our disposal, together with all facilities for carrying out our experiments at their Salford Iron Works, have enabled us to put theory to the test of experiment on an engineering scale.

THE SO-CALLED "DEAD WIRE" OF THE ARMATURES OF DYNAMO MACHINES.

BY PROFESSOR W. A. ANTHONY.

It is almost universally taught that that portion of the wire of an armature that does not traverse the field of force, that is, does not cut across the force lines, is "dead wire," and that it should be the aim in designing a dynamo to reduce the amount of it as much as possible. The inside wire of the Gramme ring, for instance, is often referred to as so much waste resistance. The wire that crosses the ends of the Siemens armature is considered in the same light. It has been attempted to improve the Gramme machine by placing pole pieces inside the armature, and we have been taught, on what should be good authority, that the Siemens armature should be of considerable length in proportion to its diameter, though this for other reasons should not be carried to extremes.

But this whole subject may be viewed from another standpoint, which may cause it to appear in a different light. In all machines except those of the Faraday disc, and the Siemens unipolar types, the moving wire encloses

Digitized by Google

an area through which the lines of force of the field are alternately taken and excluded as the coils revolve. It is demonstrated in all the text books by the familiar assumption of a straight wire sliding across a uniform magnetic field on two fixed parallel rails, which are joined together by a fixed wire at some distant point, so that the whole forms a closed circuit, that the E. M. F. in the moving wire is equal to the area swept through per second multiplied by the intensity of the magnetic field, and, since the intensity of the field is conventionally represented by the number of lines passing through unit area, the E. M. F. in a closed circuit due to motion in a magnetic field, is equal to the number of lines of force taken into or excluded from the circuit per second.

In the Siemens unipolar dynamo, where a conductor moves across the lines radiating from the poles of a magnet, the area enclosed by the circuit is not altered, and the E. M. F. is equal to the number of lines cut per second by the moving conductor. But here only the E. M. F. due to the one length of conductor can be obtained, except by the use of a complicated system of sliding surfaces. In all practical dynamos the moving wire forms a coil, and the E. M. F. developed by its motion is determined by the rate at which lines of force are taken into or excluded from the area enclosed.

Consider the Gramme armature:

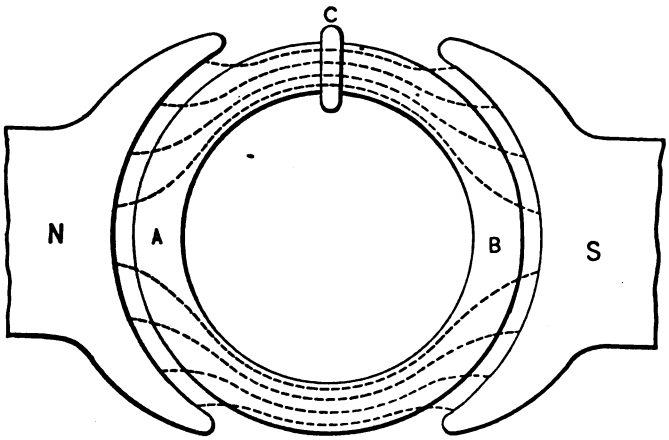

Let A B be the iron core, N and S the pole pieces. C one of the coils of wire. Lines of force pass from the pole piece N into the ring, and, following around it, pass out into the pole piece S. These lines pass through the coil C in the position represented, but, as the armature revolves, when C reaches the position B, all the lines have been excluded. Following C through one revolution, it will be seen that all the lines of force are twice included and twice excluded, and if n = the number of revolutions per second, $4\,n\,N$ is the number of lines per second swept through by the coil, where N is the maximum number of lines passing through it; and $4\,n\,N$ is, therefore, the average E. M. F. developed by that coil. To increase the E. M. F. without increasing the speed of rotation, the number N of lines which it includes and excludes must be increased. It is immaterial how they are introduced or discarded, whether by the outer or inner portion or by the edges, and the theory that makes all the wire except that outside the iron ring "dead wire," assumes that the number of lines of force that follow the ring from pole to pole is proportional to the area exposed to the pole pieces, and would be doubled or at least largely increased by presenting pole pieces to the inner surface of the ring. Whether this is probable can be best understood by considering the whole magnetic system of the machine as a *magnetic circuit* in which lines of force are developed by the field magnet coils according to a law similar to that of Ohm for electric circuits. According to this view, iron is the best of all conductors of magnetic lines, but air is by no means an insulator; and in a thick layer of considerable area, as in the space between the pole and iron ring in the figure, the resistance it offers may be small as compared with the iron in other parts of the circuit. The ring itself has a comparatively small cross-section, and moreover the resistance of iron increases greatly with the number of lines of force it has to carry. It may happen that the resistance of the air space between the pole and armature ring shall be less than that of the ring itself. If this be so it would avail little to increase the surface presented to the ring by adding an interior pole piece. Its effect could only be to diminish a resistance that was before only a small fraction of the whole, and the number of lines of force passing through the coils would be only very slightly increased.

Now consider the Siemens armature. To fix the ideas take a particular case. Suppose the mean length of the armature 18 inches, and mean diameter 6 inches. The length of one turn of wire is 48 inches and the area enclosed 108 inches. An armature 12 inches long and 12 inches diameter would require the same length of wire, but each turn would enclose an area of 144 square inches, and supposing the strength of field the same, the coils in the latter case enclose one-third more magnetic lines than in the former. But how would this change of dimensions affect the field. There need be no change in the field magnets. The pole pieces would be changed in form, but the area presented to the armature is not changed. The cross-section of the armature core is the same in both cases. In the 12×12 armature the distance through the core from pole to pole is greater, but, since its circumference is twice as great, the wire will occupy only half the depth, and the air space between the poles and core will be much less. It is safe to assume that the total resistance of the magnetic circuit for the 12×12 armature would be less than for the 6×18, and that the number of lines of force passing through one of the coils of the former would not be less than one and a half times the number passing through the latter. The larger armature, therefore, would need to make only two-thirds as many revolutions per minute to develop the same E. M. F. It would appear, therefore, that *other things being equal*, the best form of coil for an armature would be the form that enclosed the greatest area, with least electrical resistance, that is the circle; such are the coils of the spherical armatures of Thomson & Houston.

It must, however, be remembered that there are three factors determining the E. M. F. of a given machine: armature area, revolutions per minute, and strength of field. These are not wholly independent of each other. The form of armature in itself the best, might not permit the best form of field or the highest speed. The three factors must be considered together, and such a form adopted as will on the whole give the best results.

It must not be inferred from the above, that there is any error in the view that ascribes the E. M. F. of an armature to the cutting of the lines of force of the field by a portion of the wire, while another portion is inactive or "dead." Both methods of viewing the subject are correct, and will lead to the same results if all the factors that enter into the problem are considered. The error lies in the supposition that the dead wire may be brought to life and made to add to the E. M. F. previously existing, by merely presenting to it the pole of a magnet. If those who have expected great things from the pole inside the Gramme armature, had looked at the problem from the point of view of the number of lines that pass through the armature coils, might it not have suggested the question whether the added pole piece would increase that number, or lessen the lines from the outside pole piece by just the number furnished from within.

PHYSICAL LABORATORY,
CORNELL UNIVERSITY, January 19, 1887.

Digitized by Google

DYNAMIC ELECTRICITY.

BY CARL HERING.

(Continued from page 13.)

CHAPTER VI.—CALCULATION OF ARMATURES.

From the general principles governing the designing and construction of armatures, which were given in the previous chapter, it will be seen that armatures for generating a definite potential and current may have widely varying dimensions, that is, a number of armatures of entirely different proportions may generate the same potential and current; some one of which will, however, be better than the others. It is not possible, therefore, to lay down a fixed set of rules, by means of which the best proportions of the armature may be determined directly at the outset from the amount of electrical energy to be generated. This must be ascertained by comparing the general calculated proportions of these different armatures with one another, and selecting that one which will be the best under the circumstances. For instance, one armature may have twice as many windings as another, and will, therefore, require half the intensity of field, or half the speed; or it may have half the length, but twice the diameter; or it may have many other combinations of the number of windings, diameter, length, speed, and intensity of field, and yet give the same potential and current. The one which will be the best depends on whether the machine is to be built cheaply, or for the greatest efficiency; whether it may be large and massive, or small and light; or whether the speed may be high, or must be low; in general, it depends on the conditions which limit the construction of the machine. It will, therefore, be different under different circumstances, and must be decided for each case.

It is not necessary, however, to build these different forms in order to find which is the best; it may, in most cases, be ascertained directly from the calculated dimensions. The best and shortest method for ascertaining these proportions is, therefore, to calculate one form, and then to find by calculation how a variation of each one of the principal proportions will affect the ultimate dimensions and speed; it will then be easy, in most cases, to select from these the one which will be the best under the given conditions. In this selection one should be guided by the calculated efficiency of the different forms, by the general proportions of well-constructed armatures, and by the particular style of frame and armature of the machine.

It is difficult to say what is the best order in which the various parts should be determined. It will make very little difference, however, provided the proportions are afterward varied, to see whether they may be improved. In general, the following order may be recommended for cylinder and Gramme armatures. Assume first a certain induction in volts per foot, which is thought to be attainable in that type of machine. Dividing this into the total number of volts to be generated will give the length of the active wire in feet. Assume 70 to 80% of the surface of the armature to be active, that is, embraced by the pole pieces. Dividing the active length of wire by this percentage gives the total length of wire on the cylindrical surface of the armature. From the current which is to flow through the armature determine, approximately, the size of the wire, remembering that the two halves of the winding are in multiple arc, and that, therefore, only half the current flows through each wire. From the length of wire on the cylindrical portion of the armature, and from the diameter of the covered wire, it is easy to ascertain the diameter and length of an armature which will contain this amount of wire on its outside cylindrical surface. The number of layers being always a whole number, which, from the nature of the armature, is limited to very few values, and the circumference of the armature being some multiple of the diameter of the insulated wire, it will generally be found that two or, at most, three trial calculations will enable one to determine the diameter and length of the armature, and, therefore, those of the core.

For cylindrical armatures, a simple deduction will show that the following relation is approximately correct: the length of the wire, in inches, on the cylindrical surface, multiplied by its diameter in inches (including insulation) and divided by the assumed number of layers, is equal to the cylindrical surface of the armature, in square inches, that is, its length in inches multiplied by its circumference in inches. This will enable one to calculate the cylindrical surface, from which the diameter and length can readily be determined, as the circumference must evidently be such a multiple of the diameter of the insulated wire as, when taken together with the number of layers, gives an even number of lengths, equally divided among the commutator bars or coils.

Another method, which will frequently be found to be shorter, is to assume any fixed number of commutator bars, turns per coil, and layers; this will determine the circumference or diameter of the armature. From the number of wires obtained thus, and from the total length required, the length of the armature may then be readily ascertained. If it is found to be absurdly large or small, it is easy to find what changes in the assumed numbers will correct it.

It is assumed herein that there are no iron or wooden lugs or partitions between the coils on the armature; if, however, such lugs are to be used, the circumference of the armature, obtained as described, must be increased by the sum of the spaces occupied by these lugs; that is, by the width in inches of one lug, multiplied by their number.

After having made these preliminary calculations, it is necessary to ascertain whether the resulting proportions of the armature will comply with other conditions which did not enter into the calculations. For instance, from the nature of the armature determine the speed at which it will be safe to run it, and from this, together with the diameter, find the inductor velocity. From the induction in volts per foot assumed at the outset, and from this inductor velocity, determine what the intensity of the field must be. This may be ascertained as follows. Suppose the induction assumed was 1.3 volts per foot, and the inductor velocity 45 feet per second, then any one of the wires will move one foot in $\frac{1}{45}$ of a second. A foot of wire generates 1.3 volts, and, as described in the last chapter, it must cut the field at the rate of 130,000,000 lines of force per second, or in $\frac{1}{45}$ of a second it must cut $\frac{1}{45}$ of this, or about 2,880,000 lines of force. As one foot of wire, in moving a distance of one foot, cuts through one square foot of field, the number of lines of force just determined must pass through one square foot, independently of the actual shape or size of the field; dividing this number by 144 gives the number of lines of force per square inch, that is, the intensity of field required to generate an induction of 1.3 volts per foot at a velocity of 45 feet per second. In this case, the intensity of field will be about 20,000 useful lines of force per square inch, which intensity can readily be generated by properly proportioned and economical magnets.

From the diameter and circumference of the armature, ascertain, approximately, what percentage of the length of one complete winding, or coil, will be active, that is, will lie on the cylindrical surface of the armature, taking care to allow for the extra length required at the heads of a cylinder armature, which for short armatures with many windings will be no inconsiderable amount. Dividing the length of wire on the cylindrical surface determined at the outset, by this percentage, gives the total length. From this, together with the size of the wire, find the resistance of the armature, allowing also for the heating. The square of the current, multiplied by the resistance, gives the loss of energy in the armature, which should be from 2 to 10% of the total energy generated by the machine, depending on its size and on the desired efficiency. If it is found to

Digitized by Google

be much greater, the armature will probably heat badly, being poorly designed for efficiency; if it is less, it shows that a smaller armature could be used, if desired, decreasing some other parts proportionally. A more rational method for determining the diameter of the wire would be to find what its resistance should be from the allowable loss in the armature, and from the current; from this resistance, together with the total length of wire, find its cross-section. But this will frequently be found less convenient, as the length cannot always be ascertained without first assuming some diameter.

Having thus determined roughly the proportions of some one form of armature, which will generate the desired potential, and will not heat too much with the required current, ascertain, by varying such dimension as the nature of the machine will permit, whether the construction of the armature may be cheapened, or whether the efficiency may be increased, or both. As a rule, it is not necessary to make these preliminary calculations with any very great degree of accuracy, as there are a number of factors—such as the self-induction, the heating, the sparking, etc.—which do not enter into the calculation, but which will affect the results. In order to allow for these, as well as for other small errors in calculation, it is advisable to assume a slightly higher potential at the outset. Any small errors made may be corrected in the winding of the field magnets, provided such corrections are not too great to be within the limits of the field.

In series machines the difference of potential at the terminals will be the electromotive force of the armature less the losses in the field coils and in the armature itself. The electromotive force which is used in calculating the armature, should therefore be higher than the difference of potential required by the work to be done, by the amounts lost in the machine itself. The loss in the field magnets may be from two to five per cent. for large well built machines and up to 10 or 15 per cent. in smaller cheaper ones. The same may be allowed for the armature, though it is advisable to make this loss as small as possible, as the sparking generally decreases with the watts lost in the armature.

For shunt wound machines the electromotive force will be reduced only by that lost in the armature, but the current will have to be increased by the amount passing through the field coils. This may be taken from two to five per cent. for large well built machines, and 10 to 15 per cent. in smaller cheaper ones.

(*To be continued.*)

STATISTICS OF UNITED STATES PATENTS ISSUED IN 1886.

COMPILED FOR THE ELECTRICIAN AND ELECTRICAL ENGINEER, BY THOS. D. LOCKWOOD.

THE total number of patents for inventions, in all classes, issued from the United States Patent Office in 1886, is 21,797. The total number issued in 1885 was 23,330. The year 1886 thus shows a decrease of 1,533. The total number of patents issued upon electrical inventions, or in which electricity is applied, is, in 1886, 1,337. Total in 1885 was 1,358. Showing a decrease for 1886 of 21. The electrical patents of 1886 constitute 6.13 per cent. of the whole.

The electrical inventions may be classified as follows:

Conductors, insulators and supports, divided into the following sub-classes:

1. Cables and compound conductors	17
2. Couplings and connectors	16
3. Insulated wire, flexible cords, etc.	12
4. Insulators for pole lines	14
5. Insulating materials and compounds	12
6. Line wire-construction, etc.	4
7. Supports, poles, fixtures and cable hangers	6
8. Underground systems, etc.	44
Total in class	125

The patents relating, in a greater or less degree, to telephony are contained in the following 12 sub-divisions:

1. Battery telephones, or transmitters so-called	68
2. Magneto and receiving telephones	33
3. Telephonic relays and repeaters	4
4. Telephone station apparatus	16
5. Telephone signals	12
6. Telephone exchange systems and circuit arrangements	12
7. Induction remedies, etc	4
8. Individual calls	10
9. Guards against abnormal currents and lightning arresters	15
10. Switchboards	5
11. Miscellaneous telephonic utilizations	32
12. Mechanical telephones	21
Giving a total of	232

Patents showing plans for the distribution of electricity and its utilization in the transmission of power, divided into three sub-classes:

1. Distribution of electricity	35
2. Railways, and motors therefor	55
3. Transmission of power, telpherage, and stationary motors	42
Total	132

Those relating to the generation, development, or storage of electrical energy are in the following sub-classes:

1. Batteries—primary	46
2. " —secondary	22
3. Dynamo and magneto machines	72
4. Dynamo regulators	33
Total, as above	173

Electrical illumination comprises four sub-divisions:

1. Arc lamps	56
2. Incandescent lamps	49
3. Lamps and electric light fixtures	16
4. Lighting apparatus, cut-outs, and similar appliances	36
Total in class	157

In the subject of telegraphy, the following is the result of the year:

1. Autographic, automatic and chemical telegraphs	7
2. Keys, relays, sounders, repeaters, etc.	29
3. Multiple telegraphs	11
4. Printing "	22
5. Novel systems	9
In all	78

The following well-known applications of electricity are bunched as a single class, composed of 11 sub-classes:

1. Annunciators, indicators, and alarms	62
2. Burglar alarms	14
3. Clocks—synchronizing and time systems	53
4. Circuit breakers, closers, changers and controllers	20
5. Electro-magnets, armatures, and induction coils	18
6. Electro-metallurgy	10
7. Fire and heat alarms, and district telegraphs	54
8. Measurement, galvanometers, etc	29
9. Gas lighting	13
10. Railroad signals and train telegraphs	41
In all	314

Unclassified applications, 126.

The grand total as stated above is 1,337.

Telephony is still the most traversed line of electrical invention.

The electrical inventors' names, considered alphabetically, are classified as follows:

Patentees under the initial A = 25; B = 146; C = 76; D = 70; E = 45; F = 59; G = 71; H = 107; I = 2; J = 32; K = 40; L = 58; M = 101; N = 4; O = 4; P = 69; Q = 0; R = 51; S = 133; T = 84; U = 1; V = 36; W = 118; X = 0; Y = 2; and Z = 3.

In 1886 B holds, easily, the place of honor, S, W and H being respectively second, third and fourth. The letter K has made a long forge ahead, apparently on Mr. Knight's electric railway patents; V is indebted to Mr. C. J. Van Depoele for its position. Q and X are, as usual, unrepresented.

Digitized by Google

THE "C. & C." ELECTRIC MOTOR.

PUBLIC interest in electric motors is developing with remarkable rapidity. Their construction and introduction are fast becoming prominent features of electrical business. Electric motors of a variety of forms constitute a basis for the inauguration of new manufacturing enterprises in considerable numbers, while established constructors of dynamos are in many cases turning their attention to motors as well.

The extent to which small electric motors have come to be used for sewing machines, fans, dental machinery, and the machinery of small workshops, is quite surprising to those who have not kept the run of the business. Current is supplied either by battery or connection with electric light circuits; the latter method coming rapidly into practice in many cities.

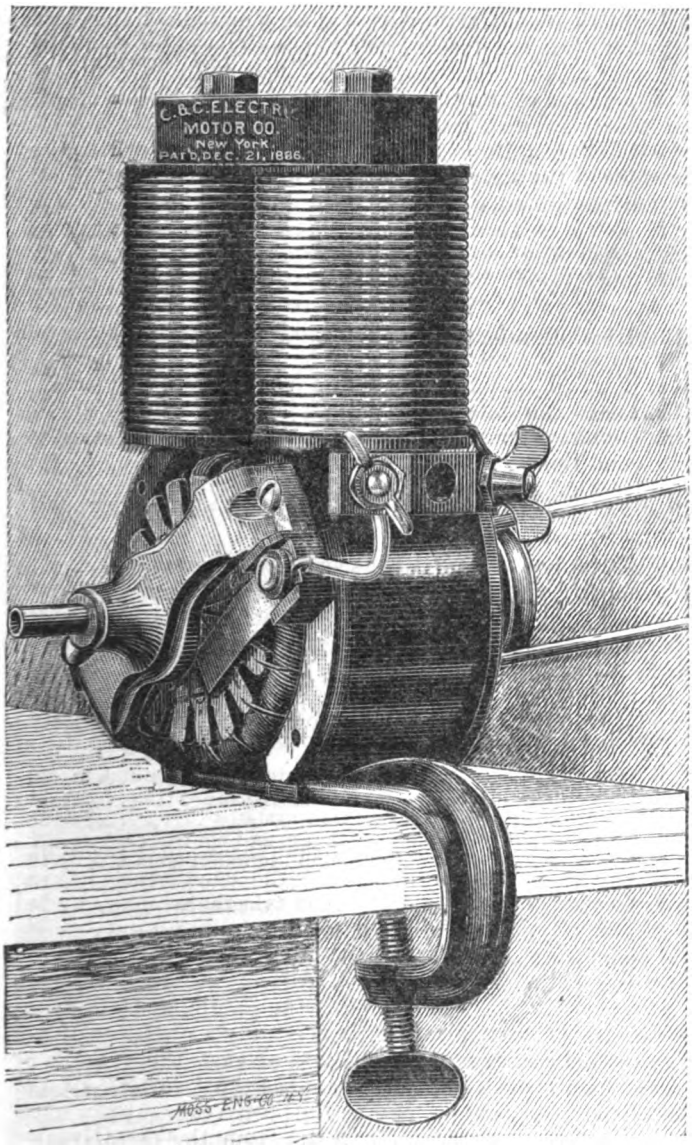

We have recently had an opportunity to examine the motors of the "C. & C." Motor Co. and to visit their factory, by the courtesy of Mr. S. S. Wheeler, manager of the manufactory, and were much impressed by the simplicity and excellence of their motor, as well as by their thoroughgoing and economical methods of manufacture. Both product and processes evince electrical and mechanical abilities of a very high order.

The accompanying illustration shows a motor of the type chiefly made by the "C. & C." company at present. It was designed mainly for sewing machines and other similarly small machinery. The engraving itself is perhaps sufficient explanation of the peculiarities of the machine.

Its weight is 12 pounds, size 7½ x 5 x 3 inches. Capacity up to ⅛ h. p. depending upon the current supplied. Current capacity 20 amperes; speed from 500 to 2,000 turns per minute, according to requirements of use. For an average sewing machine, the speed would be about 1,200 turns. The counter electromotive force generated by the motor running at 1,800 turns per minute, with 18 ampere current in field, is given as five volts. The entire resistance of the machine, the armature and field being in series, is ¼ ohm. The motors are wound to higher resistance for use on incandescent light circuits, the wire being proportioned so that the machine shall be kept to its normal consumption of say 100 volt-amperes. The armature, of the ring type, is wound continuously, wire of trapezoidal section being used in the latest motors. The commutator brushes—as may be seen in the illustration—are so arranged that no injury can arise from reversing the motion of the armature. As will be obvious to the reader, these motors may be run either from a battery or on an electric light circuit The "C. & C." company make and supply a battery specially designed for their motor. The provision of an efficient and convenient battery has been perhaps the chief obstacle to an extensive use of small electric motors hitherto. There have been many reasonably good motors, but few good batteries. In the "C. & C." battery the inconveniences inherent in batteries generally, seem to be reduced to very low, if not their lowest terms. It consists of two cells and is enclosed in a box 8 x 12 x 12 inches. It has an electromotive force of 3.9 volts and a resistance of .06 ohm. It gives a current of 20 amperes through motor held still, and 8½ amperes through motor running at 1,200 turns per minute. The mechanical construction is such that the electrodes may be immersed or withdrawn from the fluid, or maintained at any depth, by means of a lever outside the case, thus providing a means of perfect regulation of speed by the operator of a sewing or other machine. The practice of the "C. & C." company in stamping on every motor or battery made by them a complete statement of its capacity is to be commended.

GLOW-LAMPS: THEIR USE AND MANUFACTURE[1].

BY MAJOR-GENERAL C. E. WEBBER, R. E., C. B.

IT is not my intention to enter into any dissertation on the various kinds of glow or incandescent lamps which have appeared from time to time since their first use by De Moleyns, Starr, and King, between 1840 and 1850, nor do I wish to trouble my audience with the history of the inventions which have led up to the so-called glow-lamp now in commercial use. It is my desire to lead them to realize that in the manufacture of glow lamps we have a rapidly growing industry, in the increase and efficiency of which they may all before long be interested. It is true that the time has not yet arrived when a general audience can be expected to evince as much interest in my subject as they would naturally do in the lectures on candles or lamps, delivered in this hall, but it is believed that a more general knowledge of this very interesting subject will aid in its popularization.

When the glow-lamp was first introduced, its promoters misled the public judgment and eye by claiming for it more duty than it was able to perform. It was shown in exhibitions, where each exhibitor vied with the other in one direction, namely, in creating a blaze of light, where the little glow-lamp was placed alongside the powerful and intense brilliancy of the arc electric light. The exhibition of lamps of 16 to 20 c. p. in groups became the custom, and the public was unconsciously led to compare

1. Abstract of paper read before the Society of Arts, London (Eng.), Wednesday, December 8th, 1886.

Digitized by Google

these, in their minds, with gas jets and Argand burners of far lower real candle-power.

Born and educated in the use of illuminants, which present to the eye a soft wide gaseous flame, having a measurable iridescent surface containing incandescent particles widely dispersed, we were quite unprepared to estimate the increased power of the brilliant little line of intense incandescence that meets our view when we regard this glow-lamp.

Wherever one went, either the gasfittings were made the supports of the glow-lamp, or it was hung from the ceiling, so that on entering a room lighted by a number of these pendants, a brilliant line of light cut the eyes like the blow of a whip lash, rendering everything for a time obscure. Indeed, from careful study of places lighted with the glow-lamp, I have come to the conclusion that the eye is much longer recovering the effects of this sudden slight paralysis of its light receptive powers than is supposed, and that this cry of more light which one hears, where the subject has been dealt with from a gasfitter's point of view, is simply due to temporary observation and loss of power to discover the true needs for illumination of the surrounding objects.

In more than one club in London, where the lines I have referred to have been followed in applying electric light, although the candle-power of the latter is about three times the value of that of the lamps previously in use, there is a constant outcry from the young eyes that "there is not enough light," and from the old eyes that "they know not where to go to avoid the glare."

When regarding this question from the point of view of economy, we see the reason why the cost of electric lighting has so much deterred its use in competition with cheap gas, at the same time the still cheaper arc electric light is ignored or condemned. The screening of glow-lamps from direct vision adds still further to the cost of lighting, but if arc lamps were more used, their cheapness would allow of much light being wasted in concealing their brilliancy by deriving the light only from reflecting surfaces.

The conclusion I have come to, after visiting electric light installations at home and in many parts of the Continent, is that with all kinds of electric lamps used in interiors, the eye ought never to be allowed to meet the source of light, even when subdued 30 per cent. by transmission through obscuring media.

Lately, the council of the Royal Albert Hall has been making a few experiments in the distribution of light within that noble building. Both arc and glow lamps have been tried. The former in the upper, the latter in the lower part of the hall. With the arcs it was found that only in the upper arcade could they be concealed from the eyes of the audience. The effect of brilliantly lighting it up with 12 2,000 c. p. arcs was good, but the light reflected into the body of the hall by the back wall, was probably only one-tenth of that yielded. Six more such lamps placed high up in the lantern, were of no more use than moonlight would have been, but when lowered below the level of the cornice, gave directly or by reflection their full effect. When all the 18 were suspended in a group and let well down into the body of the hall, the illuminating effect on objects was inferior to that of the 32 gas pendants, each with 60 gas jets, which are suspended all round the hall just above the arcade, but when one turned the back to the light the same print was equally easily deciphered.

What the effect of diffusing the light of such a group would have been if the lamp had been confined in an obscure glass lantern remains to be proved. Advocates of concentration and of dispersion of the arc lamps were found. But when it came to the concentration or dispersion of the glow lamps used in the trial, there was little difference of opinion as to the good effect of throwing the light from them towards the backs of the boxes by placing them under the ceilings of each box, and concealing them from the eye of the audience. Some will recall the gloomy cavernous effect of the three tiers of boxes at the Royal Albert Hall. Lighted up, as some of them were, for the trial I am describing, the scene was pronounced fairy-like. The lights were placed so as to be of no inconvenience to the occupants; but the effect was to lighten the whole aspect of the elevation, and as every lamp was concealed, the eye could dwell on features of construction and color, which before were no more than masses of shade.

This concealment of the glow lamps was also carried out on the orchestra stage under the organ, where the trial was equally successful in demonstrating the fact that, although the loss of light may be considerable, by following such a course that loss is a gain, when it can be proved (of which there is no doubt) that the eye is far better able to examine the objects around the concealed lights than if they were exposed.

From the manufacturing point of view, the glow lamp consists of three distinct parts, namely:—The filament; the wire mount or conductor; the glass bulb.

The object of most inventors has been to find a highly refractory substance, and they have all ended in using carbon of either a fibrous or morphous consistency, which they produce in the shape and of the nature which they require, by various processes. The conditions of form, density, uniformity of section, surface, and electrical resistance, with which a glow-lamp bridge must be endowed are now well understood.

So early as 1878 it was discovered or revealed, that in order to be able to use a large number of glow lamps on one system, they must all be subject to the same electrical conditions of tension. It was found that it would be impossible to maintain uniform illumination in all the glow lamps on a system, if each lamp was to be subject to different conditions of pressure; and that the only way to achieve a practical result was to connect one terminal of all the lamps to a main conductor conveying a current in the first place sufficient for all the lamps destined to be used in the system, and in the second place having an E. M. F. or potential above zero (zero being an empirical "earth") of an energy suitable to bring the filament to a state of incandescence; and so arrange that the value of the E. M. F. should be the same throughout. In other words, the system of distribution known as the parallel system was thus practically discovered. The second or return conducting path is, of course, necessary when dealing with a physical development of energy such as what we call "electricity," to complete the circuit to the so-called negative terminal of the dynamo, or other source.

It will readily be appreciated that the word "parallel" is a misnomer, the parallelism of the conductors having nothing to do with efficiency. And that there being carried alongside of one another throughout a building only arises out of a desire to economize the labor of the workmen who have to put them up.

It would, I conceive, be well if the public, and above all the insurance companies (for it is largely a question of fire risk), could be brought to understand that the second or return wire is electrically the same as the "earth" of the electrician, and that so long as the positive, or supply wire, is well insulated and kept far apart from the negative, or return wire, no further precautions are necessary; and when they are thus far apart, even if one is bare, greater security is obtained than by the present system, which unreasoningly insulates the wire which need not be in a state of electrical tension, as well as that which is always ready to discharge. I have digressed a little way to show why absolute uniformity in the glow lamps is necessary to such a system; nothing in its condition could be made to compensate for any defect in that respect. The chief aim then must be to secure this uniformity in the manufacture of the filaments of glow lamps.

In a good glow-lamp, inseparable from uniformity of

Digitized by Google

resistance, are uniformity of surface and incandescence. Uniformity of resistance when hot, means that each lamp will (so to speak) consume the same amount of current, and this can only be secured by electrical measurement under the conditions of uniform electrical pressure. Uniformity of incandescence and surface means that lamps possessing these qualities give almost the same candle-power, and this can only be obtained in the manufacturing processes by visual measurement.

To secure all three, it is necessary to combine a means of visual and electrical measurement. The former is but approximate, the latter is as accurate as a Thomson's galvanometer can make it. In either case, however, when large numbers of filaments have to be standardized, neither measurement can be expected to produce greater accuracy than is essentially necessary for a good commercial lamp; and the fact is that while uniformity of E. M. F. is the condition which must not be departed from, no harm arises in practice if the current consumed and the candle-power is not absolutely uniform. Thus, the required resistance of each lamp is such a resistance as will, under the condition of uniform E. M. F. or electrical pressure, give, with a small varying area of surface, such a candle-power as that to the eye all the lamps are alike when they are incandesced.

This required resistance is obtained by a process known in the electrical world as "flashing," a title which, I believe I am right in stating, owes its origin to Mr. Lane-Fox.

The filaments having been thus standardized, they have to be mounted or attached to the metal conductors, which pass through the glass, and thus make their ends electrically in communication with the outer air. An important condition of the result of any process of doing this must obviously be the obtaining of a good and perfect electrical contact or joint between the metal and the carbon. The absence of this would be fatal to the future of the lamp. Every inventor has labored hard to secure this.

The making of good joints between the ends of electric conductors has been, for the last 30 years, the subject of intense care to every engineer who deals with electricity. No wonder that its importance should be vital in the case of these two little connections, knowing that once sealed up in this bulb they cannot be got at again for repairs, and also knowing the intensity of the current to which they must be the path. In joining iron or copper wires to one another, telegraph engineers long ago knew the difference in the resistance of their lines due to the careful use of soldered joints, instead of leaving them what they call "dry."

Next is the question of the solder to be used, and I believe that no one will dispute that Mr. Lane-Fox was the first to use the process of deposition of carbon by electrically heating the joint in a vessel containing an hydro-carbon surrounding, so as to solder the metal and carbon surfaces to one another. The way in which this is effected is pretty much the same in execution everywhere.

The wire mount of platinum wire, or other suitable metallic conductor, is placed in contact with the carbon filament or bridge, so that they are kept together by any suitable contrivance of their ends, and the joint is then flashed. As any further deposition of carbon on the filament itself would alter the standard effected in the previous stage of the process of carbonization, it will not answer to allow any current to pass through it. This is prevented by any simple means of short circuiting the current, so that it shall only pass through the joint. In the process carried out before you, this is done by this apparatus, which holds the filament in this vessel, which contains hydro-carbon in a liquid instead of in the gaseous form you saw used for carbonization in the previous stage.

Practically, the chemical phenomena are identical in each case, and the result in this one is a perfectly homogeneous electrical joint, larger in section than the other portions of the path of the current, and therefore of ample strength and conductivity to prevent risk of any future wear and tear through high temperature and rough usage.

There is not much to be said about the platinum mount. There are small details in its construction, and the manner of preventing its two sides coming into contact, which vary little in design, and all have the common object. You now see this done by the introduction of the little glass bridge piece. The platinum which should be used, its homogeneity and physical conditions, are all objects of experiment and great care, too minute with which to trouble this audience.

THE BULB.

Having completed this important factor in the construction of a glow-lamp, let us turn to the envelope or bulb, which is destined to be the home of the burner under conditions for supporting combustion opposite to those under which any other means of illumination will act. In the latter, the presence of oxygen in due proportion to the supply of hydro-carbon and other light-yielding gases is vital to its usefulness. In the former, the presence of oxygen within the bulb, and its contact with the carbon bridge, is rapid death, instead of the slow decay, ending in extinction, which is the best that as yet can be expected from the glow-lamp. Imperfect though it may be, it is, however, very good, and not likely to be superseded.

This little glass vessel has also its stages of manufacture, as you will see by the performance in your presence, the power of demonstrating which, together with the processes previously shown, I owe to the permission of the Board of the Anglo-American Brush Electric Light Corporation, whose factory and offices are situated on the Surrey side of the Thames, just over against Charing Cross.

The last stage, namely, the exhaustion, is probably that upon which the life of the lamp most largely depends. This process, exemplified by the action of the mercury pump which you see here, is apparently a very simple one, and would be so, were it not that there are several small impediments to success which, when one comes to demanding a vacuum of one-millionth of an atmosphere, are very serious difficulties.

In the first place, great attention must be paid to the construction of every part of the pump, for, with valves or taps of the ordinary kind, inevitable failure and waste of labor would ensue by leakage when the stage of high vacuum is being approached.

I will avoid going into any description of the merits of the various forms of mercurial air pumps, because Prof. Silvanus Thompson will before long read a paper on that subject before this society.

The best vacuum test is probably that which is made electrically. This is carried out with an induction coil of very high tension, and the test consists in observing when the sparks between two poles of platinum, placed in a part of the pump which shares the vacuum with the lamp under treatment, travels outside the glass instead of inside.

The process of exhaustion in the early days of glow-lamp making, occupied three or four hours; now it has, by better appliances, been reduced in time to a little more than half an hour. The number of lamps turned out in a factory is determined by the number of lamps on each pump, generally three or four, and the number of pumps. Allowing 10 removes a day and 25 pumps, each having four lamps, a manufactory could turn out 1,000 lamps a day. The lamps are next tested and classified for candle-power and voltage, and marked accordingly: formerly 50 per cent. failed to give the standard of efficiency in those respects, now all are up to the mark within 10 per cent.

The electrical efficiency of lamps is measured by the watts expended per candle-power. As is well known, economy in this direction effects a saving for a given amount of light required on an installation of electric lighting, in power converted into electricity, and in the size of the conductors which convey it to the lamps.

Most makers' lamps vary between three and five watts

Digitized by Google

per candle-power, when the lamps are new, under the conditions of voltage which gives the longest life. Those are alleged to be as follows: Edison, five watts; Swan-Edison's, between 3.5 and four watts; Victoria, 3.5 watts; Woodhouse-Rawson, 3.0 watts.

The scientific man does not require to be told what are the tests to which he should subject glow lamps to prove their efficiency. At the Crystal Palace exhibition, at Vienna, at the Health exhibition, and at Philadelphia, very exhaustive tests were applied to the lamps of several well-known makers; but, at the best, all these have proved unsatisfactory, because the makers themselves were not likely to contribute their average lamp, and in some cases either declined to contribute at all, or repudiated the results after they were published.

The tests which require apparatus not usually outside a laboratory are those which observe the E. M. F., the current, the resistance, and the watts per candle-power. There are various arrangements for testing candle-power. I am indebted to Dr. Fleming for that which is shown on the diagram.

The arrangement is a very special one for securing an accurate E. M. F. in the lamp in process of testing. The disc of a photometer is fixed, instead of, as is usual, being left free to slide. The standard flame is a lamp of burning pear-oil, or acetate of amyl, with a flame of regulated height. The lamp to be tested is placed on a carrier which slides along the scale bar.

First, to test the current. The current which feeds the lamps passes along the mains plus and minus, *via* the minus through a Thomson's graded ammeter and a platinoid resistance to one terminal of the lamp. The difference of potential between the termini of the coil is compared with the E. M. F. of a standard Clark's cell on a potentiometer. This latter is a perfect check on the accuracy of the ammeter.

Second, to test the working E. M. F. at the termini of the lamp. Similarly this is made with a Thomson's balance voltmeter, as well as a Thomson's grade voltmeter, checked by measuring the difference of potential at the extremities of a 100 ohm coil in series with a 10,000 ohms coil.

The voltmeters themselves are placed between the terminals of the lamp, but by means of the resistances, the potentiometer with a Clark's standard cell is only compared with $\frac{1}{1000}$th of the E. M. F. of the lamp.

It will be understood that the standard cell in each is the ultimate check on the measuring instruments, provided the resistances are perfectly true, and if the latter do not agree with the former, they have to be re-calibrated.

The need for standardizing the measuring instruments used by electricians has been pressed home by Dr. Fleming to the conviction of every one concerned, but up till now little has been done beyond deliberation by a committee of the Society of Telegraph Engineers and Electricians. At present we do not know that we all mean the same thing when we speak of some of these units of measurement.

Users of glow lamps will be interested in the table shown, which is an average of several tests of the lamps of two or three makers:

Mean current and candle-power of two long-lived 100 *volt* 17-*c. p., lamps of different makers, run at* 100 *volts, and tested every* 100 *hours.*

	Initial current			—	.63 *a*	c. p.	— 18.5*
After	100	hours	"	"	.65 *a*	"	" 18.8
"	200	"	"	"	.65 *a*	"	" 20.7
"	300	"	"	"	.65 *a*	"	" 18.5
"	400	"	"	"	.65 *a*	"	" 18.5
"	500	"	"	"	.65 *a*	"	" 18.5
"	600	"	"	"	.65 *a*	"	" 18.
"	700	"	"	"	.65 *a*	"	" 17.5
"	800	"	"	"	.64 *a*	"	" 15.5
"	900	"	"	"	.64 *a*	"	" 15.2
"	900	"	"	"	.64 *a*	"	" 15.2
"	1,000	"	"	"	.64 *a*	"	" 15.2
"	1,100	"	"	"	.64 *a*	"	" 15.2
"	1,200	"	"	"	.64 *a*	"	" 15.2
After	1,300	hours	current	—	.64 *a*	c. p.	— 15.2
"	1,400	"	"	"	.64 *a*	"	" 15.2
"	1,500	"	"	"	.63	"	" 13.7
"	1,600	"	"	"	.63	"	" 12.7†

* 3.4 watts per candle-power.
† 5 watts per candle-power.

(*To be continued.*)

ABSTRACTS AND EXTRACTS.

A THEORY OF VOLTAIC ACTION.[1]

THE experiments, as described below, lead to the conclusion that the difference of potential observed near two metals in contact is due to the chemical action of a film of condensed vapor or gas on their surfaces.

Such a pair of metals, with their liquid or quasi-liquid films, are quite similar to a galvanic cell composed of the same metals, and a liquid similar to that of the films, as electrolyte, said electrolyte being divided (in the ordinary static "contact" experiment) by the intervening diaphragm of air or other gas.

In making the experiments, a specially prepared quadrant electrometer was used, having opposite quadrants of the pairs of metals under examination. This instrument was gas-tight (in the ordinary sense), and means were provided for introducing any desired gas or vapor into it, so as to act on the metal quadrants while being tested electrically.

A copper-zinc Volta's condenser, having plates eight inches diameter, was also used. With both instruments the differences of potential near the metals were compared with that of a Daniell cell, represented by the symbol D in what follows:

A number of experiments were made to ascertain the rate of decrease of difference of potential of the films on copper and zinc in air, due to the gradual tarnishing of the metals, the object being to estimate the effect due to clean metals, and compare this with their heats of combustion with oxygen. Although with these metals the comparison holds fairly well, with some others it is only an approximation, which, however, is only what might be expected, seeing that so little is known of the nature of the film and the action taking place in it.

Similar measurements were made with copper and iron in an atmosphere containing hydrogen sulphide. The film on the copper becomes positive as soon as the gas is admitted, and in this particular experiment the difference of potential rose in 1h. 18m. afterwards to .55D. It then fell gradually during eight days to zero, owing to the protecting action of the films of sulphide formed on the metals, the gas being still present. The following (quantitative) results were also obtained in this kind of experiment, where a change in the constituents of the atmosphere surrounding a pair of metals in contact reverses the difference of potential of their films, in correspondence with the reversal of electromotive force which takes place after a similar change in the corresponding liquid electrolyte used with the same metals as a voltaic cell.

Such reversal takes place with pairs of copper-iron when hydrogen sulphide or ammonia gas is added to the air surrounding them; with silver-iron when hydrogen sulphide is added; or with copper-nickel when either ammonia or hydrochloric acid gas is added. The addition of neutral or inert gases has little or no effect, and no exceptional case has been found.

It was sought to annul all electrical effect by varnishing the condenser plates, as had been done in earlier experiments, or by filling the electrometer with naphtha till it covered the quadrants; but the difference of potential did not fall below .29D in the first case and .23D in the second.

Faraday's statement that electrolytic "decomposition and the transferrence of a current are so intimately connected

1. Abstract of a paper by J. BROWN (Belfast), communicated to the Royal Society by Lord Rayleigh, Nov. 18, 1886.

Digitized by Google

that one cannot happen without the other" (*Experimental Researches*, vol. 1, page 252), gives countenance to the idea that the film is of an electrolytic nature, and, therefore, probably water condensed from the air. Two experiments were, therefore, made to test the effect of drying the air round the metals. With a pair of copper-zinc quadrants, inclosed with phosphoric anhydride for 173 days, the difference of potential gradually fell from .659D to .5D. Then, on allowing the instrument to remain open for an hour, the value rose again to .67D, a result quite as marked as might be hoped for with the unsuitable apparatus at command.

Touching more nearly on the nature of the film itself, it was found that when the copper and zinc quadrants were wet with distilled water, their difference was .88D (by calculation from thermo-chemical data it should be about .9D), and when the copper was wet with copper-sulphate solution, and the zinc with zinc-sulphate solution, thus forming a Daniell cell, divided in its electrolytic circuit, the value was almost exactly one Daniell.

The well-known experiment of Sir W. Thomson, where a water-drop was placed between the previously disconnected metal quadrants, is thus easily explained. The water-drop connection equalized sensibly the potentials of the films by altering those of the metals, which were previously at one potential.

This aspect of the Volta condenser as a copper-fluid zinc cell divided in its electrolyte, suggested the possibility of joining the films only on the two metals, without bringing the metals themselves into direct contact, and so producing a real galvanic current-producing cell from the apparently dry metals. After the expenditure of much time and care in bringing the copper and zinc plates to a true surface, cleaning and adjusting them, a current was observed which varied in different experiments from a few up to 130 divisions of the galvanometer used, but which immediately ceased when the plates were either drawn apart or placed in direct metallic contact.

It was found, also, that the "film cell" so produced could be polarized by connection with another battery.

In order to show that electrification is produced without any dissimilar contact of metals, an old experiment of Gassiot's was modified so as to avoid any such uncompensated contacts. The zinc plate of the condenser was joined to the zinc quadrant of the electrometer, and the copper of condenser to copper of electrometer. Now, on altering the capacity of the condenser, a very decided alteration of the difference of potential near the quadrant of the electrometer was observed. It is evident there were electrical charges present, although there was no actual metallic contact at which any electromotive force could (according to commonly accepted theory) have existed to produce them.

CONTINUOUS CURRENT TRANSFORMERS.

It was to be expected that in view of the great commercial success which has attended the use of transformers for alternating currents, electric light engineers should have turned their attention to the question whether it would not be possible to extend the system to continuous currents. If the conversion of high tension currents into those of low tension would be equally easy in either system, it will be evident that the continuous current transformer would receive the preference, because, in this case the energy supplied electrically from the central station would be applicable, not only to lighting, but also to motive power purposes, and to chemical work. Nothing could be more simple in theory than the transformation of continuous currents. We have only to employ a high tension motor, and let it drive a dynamo wound for the desired voltage. But in practice, the double conversion and the necessity of transmitting the whole of the power mechanically from one machine to the other, entails considerable losses. The expense of the plant would also be much greater than the cost of an alternating current transformer, and the regulating device required in order to obtain the low tension current at a fixed voltage, would in all probability, entail considerable complication. To simplify the plant, we could combine the motor and dynamo into one machine, by winding the armature with two circuits, and providing two separate commutators. One winding would be of fine wire, and its commutator would be connected to the high tension mains, whilst the other winding would be of stout wire, and its commutator would be connected to the low tension service leads. In this way no external transmission of mechanical forces from one machine to the other would be necessary, the mechanical forces only acting on the circumference of the armature. This would render it possible to reduce the shaft of the latter to a size just sufficient to carry its weight, thus cheapening the machine and reducing friction. The high tension winding, together with the field magnets, would constitute the motor; whilst the low tension winding, together with the same magnets, would constitute the dynamo; and since the currents in the two circuits on the armature would be in opposite directions, the cross magnetization of the latter would be extremely feeble, and only just sufficiently strong to produce rotation. As a further consequence of this arrangement, the difficulty of sparking would be greatly reduced, and regulation would also be rendered easier. It is very surprising that a simple apparatus like the one here described, has not long ago been manufactured by some of our enterprising dynamo makers. Quite recently, however, a firm in Norwich began to work in this direction, and now that the attention of the trade has been attracted to this matter, others will, no doubt, follow their example. Under these circumstances, it might be interesting to point out that the idea is very old, having, in fact, been used by M. Gramme, and described by the late M. Alfred Niaudet in a pamphlet published in 1875, where the credit of the invention is given to the former. Our contemporary, *L'Electricien*, reproduces a portion of this pamphlet, from which we make the following abstract: "M. Gramme, in the *Comptes Rendus* for the 23d November, 1874, has shown that his apparatus can be used for transforming electricity. He employs for this purpose, a bobbin (armature) wound with two circuits, one of fine and the other of stout wire, and placed between the poles of a magnet. If the current of two Bunsen elements be sent through the stout wire, the ring will begin to revolve, and under the influence of this motion there will be produced in the fine wire coils a current of electricity, in the same way as in an ordinary Gramme machine. In this case the secondary current has a higher electromotive force than the primary one, the ratio being in the machine experimented upon eight to one. It will be seen that we have to deal here with the transformation of electricity, and the change in tension is analogous to that produced by the Rhumkorff coil. With such an apparatus the current of two Bunsen cells can be transformed and made equivalent to a small current from 16 Bunsen or 30 Daniell cells, and employed in telegraphy. It is important to notice that the Gramme apparatus allows not only the transformation of low tension currents into those of high tension but also the inverse, viz., the transformation of a current of high tension into one of low tension. No power is gained by this transformation, because the increase in tension corresponds to a loss in strength of current, and *vice versa*." It is quite evident that, in the foregoing, the principle of continuous current transformers is distinctly foreshadowed, and, by publishing the remarks of the late Alfred Niaudet, we shall probably render a service to would-be inventors, inasmuch as we show them that any attempt at monopolizing such a principle by means of a patent would be useless. On the other hand, there will be many details, especially with regard to the avoidance of sparking and the obtaining of automatic regulation, which must be worked

Digitized by Google

out practically, and where a large field is open for the application of inventive talent. Practical electricians and engineers will do well to turn their attention to the subject. —*Industries.*

ON THE EXPERIMENTS COMMUNICATED BY M. FONTAINE ON THE TRANSMISSION OF POWER.[1]

BY M. MARCEL DEPREZ.

M. Fontaine has lately submitted to the Academy an experiment on the transmission of power by electricity, by means of a process which he considers novel, and which consists in substituting for the generating and the recipient machines a collection of machines connected in series, and in such a number that the sum of their electromotive forces makes up the value which it is desired to obtain. In the experiment in question the number of generators was four, and the number of the recipients three. This idea is far from novel, and it has been proposed by all the electricians who have sought to obtain high tensions without having recourse to the construction of the special machines which I have been the first to realize.

As for the method employed by M. Fontaine to govern simultaneously the four rings of the generators, it much resembles that described in a patent which I took out on April 28th, 1885, in which I gave precisely an example of the application of this procedure to a machine with four rings of 0.30 metre in diameter, and 0.20 metre in length, like those of the machine which served for the experiments in the works of the North of France Railway, in February, 1883. There was thus produced an apparatus, each ring of which could give a force of 1,500 volts at 1,000 turns per minute, the internal resistance of a ring being 5.5 ohms, and the total resistance of the four inducers being 15 ohms. The weight of the acting parts was composed of:

Soft iron	1,124 kilos
Copper	652 "
Total	1,776

On adding 600 kilos for the support, it will be seen that we had arrived at a total weight below 2,500 kilos for a machine with four rings, capable of producing 6,000 volts and 10 amperes at the speed of 1,000 turns per minute. This is half the weight of M. Fontaine's four machines. These results admit of no doubt, since they are obtained by the addition of the effects of identical machines perfectly known.

But this project was not continued, because the conditions laid down for the experiments at Creil were quite different. The machines of M. Fontaine revolved at the speed of 1,300 turns per minute, those at Creil made only 500 turns in the same time. The linear speed of the rings of M. Fontaine is 20.5 metres per second, as against 7.5 metres for those at Creil. If I had given the latter a linear speed of 20.5 metres, they would have yielded an electromotive force exceeding 16,000 volts. The conditions are in no manner comparable, as it will be seen, and, if the Creil machines are heavy, it is simply because only a very low speed is required of them, and nothing has been done to lighten them. If, in the arts, we were to compare machines among themselves, taking lightness as the main condition, the engines of the torpedo-boats would be far superior to those in factories, and yet the use of the latter is far more general, though they are much heavier per unit of power. The reasons for this preference are too evident to require explaining.

In this order of ideas, M. Fontaine's expedient is the same as that of the manager of a factory, who, instead of a single engine of 100 h. p., moving slowly and surely, should prefer to employ four small engines of 25 h. p. each, moving at a very high speed, and acting upon the same shaft by means of mechanical transmissions, having for their object the reduction of the speed.

[1] See Electrician and Electrical Engineer, January, p. 23.

ON THE TRANSMISSION OF POWER: A REPLY TO M. DEPREZ.

BY M. HIPPOLYTE FONTAINE.

M. Deprez has presented some observations on the note of October 26th. These observations, which tend to demonstrate that our experiments present no novelty, either in the methods employed or in the result obtained, may thus be summed up:

1. The process of connecting machines is not novel.
2. The means employed for conducting the rings of the generators much resembles that patented by M. Deprez, April 28th, 1885.
3. Our machines turn too quickly.

Our replies shall be categorical.

1. The method of connecting machines is evidently public property. If MM. Gramme and D' Ivernois patented it in 1872, it was merely that they might not be prevented from using it.

2. The method which we employed for moving the rings of the generators is identically the same as that employed by MM. Chrétien and Félix in their installation for electric ploughing at Sermaize.

3. It is easy to show that there is nothing exaggerated in the speed of our machines, since there now exist more than a thousand Gramme machines which have been working at the same speed for upwards of 10 years without requiring repairs.

What characterizes our recent experiments is not the novelty of the appliances: it is the use of simple dynamos and of well arranged mechanical elements forming a whole not cumbersome, economic to establish, easy to manage, and, in a word, practical.

The result only appears novel: the transmission of 50 h. p. through a resistance of 100 ohms, with a yield of 52 per cent., whilst employing dynamos which together weigh only 8,400 kilos, and cost only 16,450 francs.

If it is true that in industry we employ by preference a machine of 100 h. p., working slowly, in place of four 25 h. p. machines, working rapidly, it is especially to secure an economy in fuel.—*Comptes Rendus.*

GAS AND ELECTRICITY.

In one respect, the recent meeting of the American Gaslight Association fell far short of what should have been. There was no discussion, worthy the name, upon the greatest living question before the gas world—the present and future bearing of the electrical interests upon the gas interests. There was a studied attempt to pass the great question, and it was passed, well-nigh silently. There was a laughing attack made upon the photometric power of the electric incandescents, in the talk ensuing Mr. Boardman's able paper, but even this was quickly turned into an attack upon another interest. The greatest question with which the association should have grappled was left alone.

Such treatment of a living issue comes only from one of two causes—apathy or fear. Either of these is inexcusable. Properly introduced and properly handled, the discussion of the relations which the two interests bear and are to bear towards each other, would have been most fruitful in good results. The experience of some would have well served for the future guidance of others, and the hunger of many a weaker brother been allayed by the crumbs of wisdom and good advice that would have dropped from the lips of those who knew. It was a poor plan that shelved this matter for things of lesser importance.

For the question is one that must be largely met and decided upon before the ten months roll around that lead to another meeting of the American association. The coming year will see far greater progress made by the

Digitized by Google

electrical interests than the sage and sober chroniclers of "electrical accidents" are dreaming of. Inroads into the gas fields will be made to serious extent, unless such be promptly and efficiently met. How to meet these is the question on which the experienced members of the American association should have advised their brethren. The work undone has been left to others, and so far as the duty devolves on us, we are determined that every gas man who reads shall know his danger and the way of escape.

There is a way of escape that is both honorable and, in most instances, easy. This is to recognize the lighting interests as one, and, instead of entering into a combat that will probably end in mutual disaster, to enter into a compact that shall jointly serve the twin interests.

There is no need of repeating old arguments here. It is common fact that the electric arc, at least, largely helps the domestic consumption of gas, and in many cases where the street lighting has been lost to a gas company, its annual output has still shown a larger increase than in any previous years. How much better, in such cases, to make this increase in output, and still own the street-lighting plant? It takes little reason on the part of those who can reason to see the clearness of this. Nor does it take much more reason to see the way to such consummation.

The electric lighting companies are antagonistic to the gas interests, in a great measure, because the latter originally forced such a condition of things. There are those, supposably interested in the well-doing of the gas companies of the country, who have been holding their rushlight so close to the eyes of many of the older gas managers that the latter have failed to see clearly beyond, and have trusted in the assertions that it would yet prove an easy matter to whistle electricity down the wind. As we have had occasion to say before, air gas will not do as a means wherewith to combat electricity, and wind alone is a poor weapon. The misguided gas managers are finding this out, and, with purpose well-concealed, there are to-day not a few who have openly denounced the electric light, furtively making terms for that union of interests in their own cases that we openly advocate for all.

The electrical managers are becoming aware of the benefits arising from a union of interests, and they will not be slow to embrace fair opportunities. But we do not advise such a union as will necessitate a vast watering of stock and a holding up of a high price for gas to secure payment of dividends on fictitious values. There are instances wherein such procedures are, in greater or less extent, necessary; but these are the exceptions, and not the rule. What we advocate is the installation, on the part of every gas company, of its own electrical plant. Begin first with an arc system, following up, as convenience may dictate, with the smaller lamps, thus giving consumers the choice of means for illumination, and holding all the vantage ground within the company's grasp. In very many cases this can be accomplished without inflation of stock, or issue of bonds; and we need not state the effect upon the dividend-earning power of such a company.—*Light, Heat and Power.*

A PROMINENT GASLIGHT OFFICIAL ON ELECTRICITY.

"Is it true that your corporation proposes entering the business of electric lighting?" was asked by a *Journal* representative, yesterday, of a prominent official of the Boston Gas Co.

"Well, it is true," was the reply, "that we have decided to ask the next legislature for authority to produce electricity; and that will be for electric power as well as light."

"Have you found any decrease in the consumption of gas since the introduction of electric light in Boston?"

"There are many places where electricity has come into use, but in most of them gas is used also, and the consumption of gas has been extended in newly-developed sections, so that there has been no decrease, but rather an increase."

"Do you find that some stores have increased the brilliancy of their gas lighting on account of rivalry with those that use electricity?"

"Yes; that is doubtless the case in some places."

"Is electricity used on account of cheapness?"

"No; it is not so cheap a light as gas, but it may be called more novel, and it gives less heat."

"Then you do not purpose changing from gas to electric lighting?"

"No; we intend to have the power to produce both, and then to decide according to developments. There are improvements constantly going on, so that those who begin with the electric light now are liable to have to change their whole plant on account of some change in method."

"Do you consider that methods of using gas are also susceptible of improvement?"

"Yes; both in the process of production and the manner of use."

"Do you suggest the use of the new burners which have been introduced into Boston?"

"No; we never interfere with consumers, although new devices are constantly brought to our attention."

"Have you any intention of manufacturing water gas?"

"No; unless the cost of labor should be increased."

"What do you find as to the comparative cost of water gas and coal gas?"

"We can make coal gas fully as cheap, and in doing so we give employment to more men."

"Is gas likely to come into general use for other purposes besides illumination?"

"Yes; for example, it is now used to advantage in gas engines, in which the motive power is gained by a series of regulated explosions. These have not come into use so much in Boston as in some other sections. It is also valuable for heating and cooking."

"Does the franchise which you expect to secure include the distributing of electric power?"

"Yes; I think the future of electricity is more in the line of motive power than of light."

"Will the new projects involve any change in the corporation, or any increase of capital stock?"

"That is something to be considered hereafter. At present, we only wish to apply for the authority. As to the stock, we have a considerable amount unissued now which can be made available in carrying out any new development of our work."—*Boston Journal*, December 8th.

ELECTRIC TRAMWAYS COMING.

If all we read is true, and we have no reason to doubt it, we are bound to acknowledge that our transatlantic cousins are far ahead of us in the application of electricity as a motive power for tramways, and, though the *systems* in vogue may not bear the mark of originality, the spirit with which the various enterprises have been undertaken is truly characteristic of the nation. The number of electric tramways in the United States of America can be counted by dozens, most of which are working successfully and with surprising economy. Several of these lines have been in operation for a couple of years, others are of a more recent origin, and a few are still in the "experimental stage." The Americans are fond of *systems*, but, as far as our own observations go, we often find it hard to distinguish between them; the differences consist not, as the uninitiated would suppose, in the application of various distinct principles, but more in the variation of designs, some of which, for the sake of variety, are of extraordinary appearance, and the changes relate mostly to peculiarly-shaped details in the modes of suspension of motors under the cars, and in the mechanical gearing used between the motors and driving wheels.—*Electrical Review* (London).

Digitized by Google

AN ELECTRIC LIGHT TIME METER.

L'Electricité describes a new meter for electric light circuits, as follows:

M. Aubert, a clockmaker of Lausanne, has solved the question of a meter in a different manner to any of those hitherto constructed. He substitutes for the measure of the quantity of electricity a precise measure of the time during which the circuit is closed. The apparatus is very simple. It consists of a clock arranged to go only when the circuit is closed. The meter consists of a round metallic box of 10 centimetres (3½ inches) diameter, enclosing a clock movement capable of working for 200 hours. The movement works four wheels indicating by four dials minutes, hours, tens and hundreds of hours. An electro-magnet serves as a detent. The meter box is fitted with two claws, by means of which it can be fixed by two screws against any wall. It is sufficient to pass a plumb-line through the centre of the two marks at the top and bottom of the apparatus, in order that it should be ready to work. The meter box is pierced with two holes, through which the wires attached to the electro-magnet pass. At the instant of closing the circuit, by the action of the switch, the electric current excites the electro-magnet, which immediately attracts the armature; this latter, by its own motion, releases the detent of the pendulum, which is set going, and the meter indicates in minutes, hours, tens and hundreds of hours, the exact time during which the current has passed. At the precise moment when the current is interrupted, the armature, acted upon by a spring, and being no longer attracted by the electro-magnet, resumes its normal position, and the movement of the pendulum is arrested.

LONG-DISTANCE TELEPHONY.

The American Telephone and Telegraph Co., A. S. Hibbard, gen'l superintendent, in a circular dated January 27th (received too late for proper classification) announces the completion of a system of long-distance telephone lines, extending from New York to Philadelphia, Camden and vicinity, and to Stamford, Norwalk, Bridgeport, Birmingham, Ansonia, New Haven, and other points in Connecticut, by means of which subscribers to the Telephone Exchange in New York city may communicate directly with exchange subscribers at any of the above points.

The circular contains the following information:

The successful working of the long lines has been accomplished by the use of two wires in metallic circuit for each connection, and, with local metallic circuits at each end, equipped with "long-distance telephones," perfect service can be secured.

With a special metallic circuit connection in New York city, satisfactory service may be had in conversation with exchange subscribers in Philadelphia or New Haven and vicinity.

Connections from Metropolitan Telephone Exchange subscribers in New York to subscribers in Philadelphia or other exchanges connected, will be satisfactory, provided the subscribers' lines are free from the temporary interferences to which all grounded city wires are liable, and which can only be avoided by use of two wires connected in metallic circuit.

Three classes of "long-distance" service are, therefore, offered to the public. First, with metallic circuit connection at both ends. Second, with metallic circuit connection at one end. Third, with local grounded circuits at both ends.

Metallic circuits, equipped with complete cabinet sets of long-distance telephones, in direct connection with the office of this company, will be furnished at a rental of five dollars per month, if within one-half mile of the central office.

The following are the message rates from New York, each message entitling the sender to five minutes conversation:

Stamford and Norwalk	$ .50
Bridgeport, Birmingham and Ansonia	.60
New Haven	.75
Philadelphia and Camden	1.00

The above rates will be charged for service between the hours of 8 A. M. and 6 P. M.

Night service, between the hours of 6 P. M. and 8 A. M., 50 cents for each message.

Rates to other points furnished on application to the chief operator.

On monthly accounts, for the business done within the month, the following discounts will be made:

All messages over	20	and not over	30		10%	discount.
"	"	30	"	"	40	20%	"
"	"	40	"	"	50	30%	"
"	"	50				40%	"

A supplementary announcement of special connection to the stock exchange is made as follows:

A complete cabinet set of long-distance telephones has been placed in the New York Stock Exchange, in direct metallic circuit connection by the lines of this company to the Philadelphia Stock Exchange and the Philadelphia Telephone Exchange. Competent attendants are in charge to call members as desired. Conversation can be carried on with parties in Philadelphia free from induction or the disturbing effects incident to grounded circuits. The service is quick, certain and satisfactory.

Special commuted rates will be made for contract service to or from the stock exchange.

CORRESPONDENCE.

NEW YORK AND VICINITY.

Dropped Dead from an Electric Light Wire.—How a Bogus News Despatch was Circulated.—False Report of Frederick A. Gower's Whereabouts.—Preparing to Abandon Pole Lines.—Electric Lighting in Orange.

THE fire which occurred at Wilson's tea store on Vesey street, January 20th, afforded a fresh opportunity for a crusade against overhead wires, and it certainly was a striking example of that imprudence which so frequently leads men to risk their lives in the most reckless manner. Frederick Simons, station-master from the Fulton street station near by, seeing that the wires of the United States Illuminating Co. were in the way of the firemen, ran up a ladder and, with his pliers, proceeded to cut them away, apparently without taking any precaution against the effect of the current with which the circuit was charged. As the wire was severed he fell to the ground and expired. There existed at the time a difference of opinion as to the cause of his death, some maintaining that he was killed by electricity, and others that his neck was broken by the fall. The surgeon who responded to the ambulance call said he was not killed by the fall.

The coal-handlers' strike caused some apprehension in electrical circles, as it was thought that a coal famine would certainly cripple the electric lighting companies. They were found to be pretty well supplied with fuel, however, and prepared to resort to all manner of expedients in order to keep up steam.

The critical state of affairs at Weehawken afforded an opportunity for a news agency operated by Dow, Jones & Co., to lay a trap for the discomfiture of the financial news bureau of J. J. Kiernan & Co. Two or three different despatches were sent from Weehawken to Dow, Jones & Co. by the Western Union lines, giving the status of affairs at the coal docks, followed by one announcing the beginning of a riot in which the police were overpowered by the strikers. This report, although entirely without foundation, appears to have been circulated at once through Kiernan's agency. Although every effort has been used to explain the affair, there is reason for believing that sufficient care is not exercised in guarding the sanctity of private telegrams.

Some time during last fall, the New York *World* published an article which stated that Frederick A. Gower, the electrician and amateur aeronaut, who was supposed to have been lost at sea while trying to cross the English Channel in July, 1885, from Dover to Calais, in his big balloon, was not dead, as had long been thought. The article asserted that Mr. Gower was living in luxury at Malabar Hill, Bombay. It was also intimated that there was a beautiful woman in the case. Melville Gower, a merchant of New Haven, an uncle of the missing man, upon seeing the article immediately wrote to Rev. Mr. Hume, an American missionary at Bombay, inclosing a photograph of Gower, and asking that he make a thorough inquiry and search for his relative. On January 19th, a letter was received from Mr. Hume. In it he stated that there was not the slightest foundation for the story as printed. The European settlement at Malabar Hill, Bombay, is so small, Mr. Hume says, that the coming and going of an English-speaking individual is something of more than ordinary importance, and is long remembered by the colony. The photograph of Frederick Gower was not recognized by any one in the colony.

Commendable progress is being made by different companies in preparing for the abandonment of their pole lines. During the past month cables have been drawn into the Broadway conduit of the Western Union Telegraph Co. The same company has also strung quite a large amount of cable on the elevated railway. The Metropolitan Telephone and Telegraph Co. has also placed cables in the Sixth avenue subway. The actual beginning of this work indicates that, if the money holds out, a large amount of subterranean construction may be looked for during the coming year.

A delegation of the city officials of Cleveland, O., consisting of mayor George W. Gardner: C. G. Fore, city engineer; H. H. Rebbeck, city electrician; David Monson, building inspector; and aldermen Herrman, Seigris and Carpenter, called at the mayor's office in the City Hall, January 22d, and were received by acting-mayor Beekman. They were here to examine the electric subway system.

The Citizen's Gas Light Co. of Orange, N. J., having been awarded the contract for illuminating the streets of that city for the next two years, have purchased a 50-light plant of the best workmanship, and complete in all details. Arrangemente have been made with P. B. Fairchild & Co., who are erecting a new building, about 30x48 feet, on the railroad, in the rear of their shop on Reock street. It will be two stories and basement, and

Digitized by Google

connected with their present building by a bridge. It is intended as an electrical station, from which light and power may be supplied from the new plant.

NEW YORK, Jan. 24, 1887.

PHILADELPHIA.

The Fire at the Temple Theatre.—National Electric Light Association.—The Edison Electric Light Co.—Stealing Aerial Cables.—A New Electric Company at Atlantic City.—Infringement Suit of the Edison Electric Light Co. Against the Westinghouse Co. at Trenton.—Permission of Underground Conduits by Councils.

AN investigation as to the cause of the recent disastrous fire at the Temple Theatre in this city, whereby two firemen lost their lives, is now in progress. The theatre is lighted by electricity, and it is thought by some persons connected with the establishment that the fire was caused by an electric light. But on the other hand, the electricians who have testified in the matter are just as positive to the contrary. Testimony was heard from William F. Connor, electrician at the Temple theatre, who said that he put up electric lights in Niblo's Garden, New York, and Francis P. Haggerty, assistant manager of the theatre, who made an effort to put out the fire in the booth. Mr. Connor said that the electric wires in the theatre were placed in the ordinary manner, care being taken to have them perfectly safe. He thought the lights were at a safe distance from the paintings and drapery, and could not see how the fire could have originated from this cause. The theatre was lighted by the Edison system, the local agents being Hicks, Walker & Keppler. They denied the possibility of a fire as the result of the use of the Edison system. "If there was bad wiring," said Mr. Hicks, "that might account for it. Bad wiring in any system might cause a fire. But as for any drapery, or any material not extraordinarily inflammable, being ignited by contact with one of those globes, it is impossible." Mr. Keppler demonstrated by putting his handkerchief on top of a globe, inside of which the carbon film was burning. The cambric gave forth what at first looked like smoke, but what the reporter concluded was steam when it ceased to arise. After five minutes the handkerchief was taken off without a singe.

The whole subject of danger from the globes is so utterly new that J. A. Fowler, editor of the *Exchange and Review*, could find no literature bearing on the subject after a reporter who had vainly searched the Mercantile and Philadelphia libraries for information on the subject, applied to him. "It is safe to say," said Mr. Fowler, "that if the Temple theatre was set on fire by an incandescent globe it is apparently the first case on record. As far as we know the carbon film can not bring the glass globe surrounding it to a greater heat than 150° Fahrenheit, and even decayed wood requires 300 for ignition."

In compliance with a call issued by chairman A. J. DeCamp, the executive committee of the National Electric Light Association met a few days ago in parlor C of the Hotel Lafayette, to make arrangements for the third annual meeting of the association. The following gentlemen were present at the meeting:

A. J. DeCamp, of Philadelphia, chairman; Frank Ridlon, of Boston; Dr. Otto Moses, New York; James T. Lynch, New York; Clarence E. Stump of the *Electrical World*, New York; Arthur Steuart, Baltimore; George W. Boyer, Philadelphia; Thomas McCoubray, Jr., and J. L. Morrison, of Baltimore.

The convention will be held either in Horticultural Hall or the Union League Annex, on Tuesday, February 15th, next, but the headquarters will be at the Hotel Lafayette. There will be nearly 300 delegates present, among whom will be Dr. Duncan, Professor Roland, Professor Thurston, and Professor Brackett.

At a meeting of the Edison Electric Light Co. recently, it was determined to increase its capital to $1,000,000. Subscriptions were received by B. K. Jamison, Charles M. Swain and Samuel B. Huey, up to the 15th of the present month, on which date the stock was allotted among the subscribers, the committee reserving the right to divide the stock in such manner as should, in its judgment, best promote the success of the company. Temporary accommodations for the company have been secured at 108 South Fourth street, until the new Fourth street National Bank building is completed, when it will remove to that building.

A few days ago the discovery was made at the central office of the Bell Telephone Co., at Fourth and Chestnut streets, that a number of the wires were "open." An investigation showed that three of the company's cables extending over the house tops along the north side of Chestnut street had been cut between the supports on the American Hotel and the *Bulletin* office. The cutting, it is said, was done about 5.20 o'clock. Each of the cables contains 100 wires, which are insulated and covered with lead piping. Two of these cables, in all 400 feet, were stolen, the third being left behind. The wires were in working order at business hours yesterday morning.

The Atlantic City Underground Telegraph, Telephone and Electric Light Co. has been organized at Atlantic City, with George Allen, Dr. T. K. Reed, Charles Evans, Charles McGlade, John B. Champion, S. R. Morse, Daniel Morris and James A. O'Reilly as incorporators. An ordinance granting them the right of way to lay conduits has passed first reading in city councils.

The Edison Electric Light Co., of New York, has begun in the United States Circuit Court at Trenton, eleven separate suits against Westinghouse, Church, Kerr & Co., of East Orange, N. J., representing the Westinghouse Electric Co., of Pittsburg, Pa., for alleged infringement of patents covering the system of incandescent electric lighting. Injunctions and orders requiring accounting to be made by the defendants are asked for.

The Philadelphia Time Telegraph Co. has been authorized by councils to lay wires to furnish standard time. An ordinance giving the Bell Telephone Co. permission to lay conduits and erect poles on a number of streets in the central part of the city was also adopted by councils.

PHILADELPHIA, January 17th, 1887.

BOSTON.

The Boston Police Signals.—Electric Lighting in Official City Reports.—Consolidation of Electric Lighting Interests.—Pinkham's Patent on Electric Gas Lighting Sustained.—The Government Telephone Suit Re-commenced in Boston.—Preparations of the Counsel of the American Bell Telephone Co. for the Supreme Court at Washington.—Lectures on Harnessed Lightning.

THE refusal of the city government to honor bills contracted for the police signal system has led the board of police to appeal to the legislature for authority to introduce in the city proper such a system as is now in use in South Boston. This will probably settle definitely the question of the board's power to introduce such measures as it shall deem best for the interests of the police department. The board claims that the system is a public necessity, and will seek to maintain its position before the legislature.

The fire alarm department is placing boxes upon each floor of the city hall, to be used in case of fire. The boxes are about three by four inches in size, with glass front, the glass to be broken and the button inside to be pushed in case of fire.

An exhibition of the Rogers' system of auxiliary fire alarms was given at City Hall yesterday afternoon. By this system, rooms and buildings distant from the alarm boxes are connected with the boxes, and an alarm can be sounded without going to the box.

The reports of the mayors of different cities frequently contain matter relative to electrical apparatus. The mayor of Boston gives the following concerning electric lighting:

The report from the lamp department includes these statistics: Number of lamps of all kinds in use in the city of Boston on Jan. 1st, 1886—Gas, 9,978; oil, 2,630; electrics, 446; large gas lamps, 63; total, 13,117. On the first of January, 1887, the number was, viz.—Gas, 10,057; oil, 2,785; electrics, 494; large gas lamps, 59; total, 13,395; increase, 278.

The increase of the separate sections of the city has been as follows: Roxbury, 28; West Roxbury, 78; Dorchester, 105; South Boston, 26; East Boston, 23; Charlestown, 3; Brighton, 20. The number of gas and oil lamps put up during the past year was 367. The number of oil lamps changed to gas lamps was 29.

Electric Lights: Jan. 1st, 1883, 114; Jan. 1st, 1883, 381; Jan. 1st, 1885, 401; Jan. 1st, 1886, 446; Jan. 1st, 1887, 494; increase during past year, 48.

The location of the electric lights is shown below:

	1885.	1886
Brush, city proper	195	206
" Roxbury	38	47
" Dorchester	5	5
N. E. Weston, city proper	55	60
" South Boston	69	74
" Charlestown	26	38
Merchants' city proper	25	27
Citizens, East Boston	33	37
	446	494

The mayor of New Bedford, characterizes the electric lights "as an expensive luxury." Perhaps his honor is a protectionist, and would like a heavy tariff put on electric lighting, in order that the wharves of his town might once more be weighed down with barrels of whale oil.

The rumors which have been going the rounds for some time, of consolidation of electric light companies and gas companies, have become true so far as the electric companies are concerned, but not true in regard to the gas companies. The Brush Electric Light Co and the Merchants' Electric Light and Power Co. have consolidated under the name of the Boston Electric Light Co. with headquarters in Rogers' building.

The officers of the new company are as follows: President, Fred. Gilbert, formerly of the Merchants' company; vice-president, Hugh O'Brien, formerly treasurer of the Brush company; treasurer, Samuel S. Sias, formerly of the Brush company; superintendent, Patrick Fay, who has been the efficient superintendent of the Brush company for several years. It is expected that the Weston Electric Light Co. will soon be merged with the others,

Digitized by Google

thus giving the new organization a monopoly of the electric lighting business of the city.

Judge Colt, of the United States Circuit Court, has sent down an opinion in the case of the Boston Electric Co. *vs.* Charles E. Fuller, in which he orders a decree for complainant. This was a suit brought for the infringement of a patent granted July 27th, 1880, to George F. Pinkham, assignee of Jacob P. Tirrell. The invention relates to apparatus for lighting gas by electricity, in which the gas-cock is opened and closed by electric action upon a mechanical device connecting with the cock and a battery. The court finds that "the patent covers an important improvement in the art of lighting gas by electricity, and it should receive a reasonably broad construction, and those should be held to be infringers who accomplish the same result by substantially the same or equivalent means." The defendant's apparatus, the court finds, is the same in principle as the plaintiff's, though its construction differs somewhat from the plaintiff's. J. E. Abbott for complainant; E. P. Payson for defendant.

In the case of the Electric Gas Lighting Company *vs.* the Boston Electric Company, which was a cross action against substantially the same parties as were plaintiffs in the above action, of the Boston Electric Company *vs.* Fuller *et al.*, the bill is dismissed by Judge Colt. E. P. Payson for complainant, and J. E. Abbott for defendant.

The long expected bill in equity brought by the United States against the American Bell Telephone Company, in which it is sought to annul the Bell patent, was filed on the 13th inst., in the United States Circuit Court, and is the same, in all essential particulars, as that filed in the Circuit Court at Columbus, Ohio. The attorneys for the American Bell Telephone Co. are busy at work on their papers for the Supreme Court at Washington. Their arguments will be illustrated by charts showing in diagrams the various infringing instruments and all of the points where an appeal to the eye can aid the appeal to the ear. They will have a battery of 1,000 cells with which to illustrate the actual instruments, and perform the experiments necessary to show up the matters at issue. This style of argument, an appeal to the eyes of the court by operating the instruments and illustrating by apparatus the principles at stake, was very effective in the New Orleans case. The "opposition" also "performed," but it was like the trial of skill between Moses and the magicians before Pharaoh. Mr. Storrow's snake swallowed those of Mr. Beckwith, easily. There is great interest in this trial, so much so, that admittance will be by card. Justices Mathews and Blatchford of the Supreme Court have already decided in favor of the Bell company, in the circuit courts—in some of the cases now before them.

The interests at stake are enormous, and the evidence must necessarily be of a most convincing character, for the court to reverse the uniform decisions of the circuit courts, and to disturb such vast vested interests. The Bell stock is held very strong at present, and shows evidence of advancing in price.

A lecture on "Harnessed Lightning" was given at Tremont Temple, on the evening of the 12th inst., by Mr. George H. Hartwell. The platform was covered with electrical apparatus, and electric lights, arc and incandescent, and an electric railroad were shown, and a sewing machine, coffee mill, pump, a lathe, and other machines were operated by electric motors, the current being obtained from dynamos and storage batteries on the stage. Mr. Hartwell thoroughly explained the workings of the different systems of power and of the arc and incandescent lamps. He also showed the methods of isolated and central station lighting, as well as street lighting. Describing motors, he explained the manner of carrying the current and its easy control by the operator. He claimed the electric railway as a means of rapid transit of the future, and explained the various systems of street railways now in use.

BOSTON, January 16th, 1887.

CHICAGO.

Winter Sports.—Explosion in an Underground Conduit.—Iowa State Firemen's Association.—Electric Lighting Notes.

WE are having a rage of blankets and moccasins, toboggans and snow-slides, lighted by electric lamps, and the girls, dressed up like Scotch fishwives or "bois brulé" Frenchwomen, are happy. There is an exhilaration in going down a steep hill at 25 to 30 miles an hour, when the girlie knows that her best fellow guides the toboggan, and a great, burly policeman stands at the bottom of the slide to stop the blessed thing from going through the fence into the next county; and the boys seem to enjoy it as well as the girls. But it is debateable whether there is any more fun in this kind of thing than there used to be, to us who are now gray-headed, when we neither tobogganed in Indian blankets, nor even "coasted." We simply "slid down hill," sometimes on a shovel, often on a barrel stave, and occasionally on an old chair-frame with a board or stave woven through it to make a runner—yes, or on a chopping-bowl. We had sleds, but these other luxuries the sliders of to-day know little of. It was work, but there was fun in it.

Every now and again some Jack-in-the-box is sprung upon the public with the statement that the Chicago underground system is a failure. These stories come, not from those who know, but from those who hope that the underground idea shall prove impracticable.

There was a fearful explosion here the other day, which at first had an ugly look for the conduit company. Investigation showed a bad leak from the gas main, near an iron pipe running across Lasalle street, into the area of the block opposite the Grand Pacific. Through this pipe are wires leading into the buildings, and into these same buildings the conduit company have their laterals, the ends of which were open. The areas and cellars filled from the gas which followed along the iron pipe, and the pressure forced more or less gas into the conduit through the open ducts. Had these ducts been closed—they should have been—no trouble would have arisen with the conduit; some other fellow would have done the walking. The gas was ignited in the area while parties were searching for the leak. They found it, and the man-hole cover in front of the board of trade was blown into fragments, one of which sailed upward, dove through the window of the trading-room, and scared everybody generally, but did little other injury. One gentleman was cut by flying glass, and, while this is not serious, the injury will leave a reminder in the shape of an ugly scar. The chunk of iron has been duly labeled and placed in the secretary's museum, and the conduit company, now that the horse is stolen, will proceed at once to fill all the open ends of the pipes, to prevent similar occurrences in the future.

The fire-worshippers in Iowa have two annual gatherings, one of a purely business character, while the other is a sort of business jollification—the former a winter gathering, the latter a summer tournament. The winter gathering of the organization—the State Firemen's Association—met at Des Moines on the 12th. In addition to other matters of a business nature, the following resolution was introduced by Mr. A. Christy, of Des Moines, and passed:

"*Resolved*, That we, the members of the Iowa State Firemen's Association, in convention assembled, do most cheerfully and heartily recommend to the different fire departments of the state the Gamewell Fire Alarm as the most efficient and effective system now in use, and would respectfully call the attention of the city councils of Iowa to this fact, that they may inspect the workings of the same."

The Palmer House has recently been re-wired for both incandescent and arc circuits by the United States company. The Leland has been done in the same manner by the Sperry company. The Fort Wayne Jenny people have just put in a 60-arc light plant for the Armour Packing Co. at St. Louis, and an addition of 16 lights at Lassig's Bridge Works here. The Electrical Supply Co. have recently installed an arc 60-light plant at St. Charles, Mo., of the Excelsior pattern. The same company is wiring the capitol at Springfield, Ill. The Mather-Perkins general agent here, Mr. J. H. Reid, recently closed contracts for the lighting of the Hennepin avenue theatre, at Minneapolis—700 incandescent lights—and the Oliver Wendell Holmes Hospital, at Hudson, Wis. The Edison people have in hand, nearly ready for delivery, the following plants: Deming & Durkee, O. D. Wetherell, W. W. Kimball, Anglo-American Packing Co. works, Phœnix Insurance building, and Grace Hotel.

The Edison company has been housed in uncomfortable quarters for some time, until now. Their offices were upon the ground floor, beneath which the engine and dynamo fumed and pounded and sang, more or less, and heated the office unduly, while interfering with both comfort and conversation. The offices have been removed into comfortable, airy and light quarters above stairs, in the same building, and the countenances of all the officers of the company are radiant with glee thereat.

CHICAGO, Jan. 15, 1877.

SAN FRANCISCO.

The Postal Telegraph Co. Nearly Ready for Business.—Appointments in its Service.—District Messenger Service.—Underground Conduit Franchises Sought in San Francisco.

EVENTS are thickening in telegraphic circles. Mackay's Postal is no delusion, it is a *fait accompli*, and by the 1st of February is expected to be open to accommodate the public. Never did a rival to the great monopoly start under better auspices, with some glaring exceptions. These exceptions, to be alluded to hereafter, relate to features of management that have proven fatal to many an enterprise of the same kind.

For the past eleven years the Western Union have enjoyed a complete monopoly of this coast, and to their credit be it said, they have not been so exacting, in view of their complete control, as has been the case with railway monopolies. The overland service will not be much improved even with a rival in the field, for it is now good; hence if any improvement is made by rivalry, it will be in local business. It is true that customers have been kept waiting in strings of from 20 to 30—like voters at a polling place—between the hours of 5.30 and 6.30 P. M. because of only *one receiver* being on duty to accommodate them, and the fault, in a measure, is as much that of the customer, as

Digitized by Google

that of the company, because they keep their messages in their pockets until they are on their way home; but when a rival is across the way the Western Union must recognize the necessity of meeting the public, or abide the consequences.

It will be a long time before "the Postal" will be able to accommodate the public as the Western Union can do at present. It may make an attempt to bid for Eastern business, and may, in some cases, render satisfaction; but, in all fairness, their success in that direction may be doubted. With a knowledge of the country through which they pass, one need be no prophet to forecast that many a time before May 15, 1887, their customers will be notified "wires down." Half a dozen notices like this, will dull the "edge of public good will," and the exigencies of business will compel merchants to patronize the Western Union, no matter how much they would like to help the young rival.

One of the exceptions to the favorable auspices of the new company, alluded to above, is to be found in injudicious appointments in the management. Mr. Hosmer, of Canada, appoints an old friend of his as manager of the San Francisco office, who is totally unknown to the public and unacquainted with the public temper and necessities. Mr. Mackay and Mr. Rosener are, of course, publicly well-known, but half the business people do not know those gentlemen by sight; hence they will only know the company through the men with whom they are brought directly in contact. Mr. Laven has been on this coast only two years, and most of that time was in an operating room, or on Oakland wharf as operator in the train despatcher's office. Personally Mr Laven has many well-wishers, and it is to be hoped that he will disappoint his enemies, but speaking for the good of the telegraphic fraternity, and with a desire to see the Postal come to stay, it seems fair to say a better selection might have been made for the chief office on the coast. John Leatch, another Canadian, but an old timer on this coast, is to be chief operator, John is as fine a fellow as ever entered an operating room, but rather ante-deluvian in his ideas and methods.

Oakland is the greatest field for local competition, and it behooved the Postal to put "live men" in such a place, but it appears that Mr. Hatch—a man who has been laughed out of every office on the coast—is to be manager there. Such appointments seem attributable to "influence" more than to sound judgment. The Postal, have entered into a contract with the San Francisco District Telegraph Co. to deliver their city business under the management of J. B. Gill. If Mr. Gill will devote his entire attention to this department, it will doubtless be satisfactorily run, but if he leaves it to his smart boys, John Barry (the manager of the Western Union Delivery Department, a man who does not need a directory for two-thirds of his business), need not be afraid of losing his well earned and deserved laurels.

The messenger boys of both the District companies have been on a strike for the past week, with no signs of a compromise. The boys demand 75 cents per day. The companies have been paying them 5 cents per message. The companies charge 30 cents per hour for the boys' time, and a boy is allowed to take only one message at a time; hence the boy receives 5 cents and the company 25 cents for the boy's service. Of course, half hour messages are 15 cents, but the companies gain on the boys' time without incurring any expense save the placing of boxes. Now, in view of the fact, that a boy is compelled to pay $18 to a tailor for a very inferior uniform, $1.25 for a cap, and $2.50 at least every six weeks for shoes, and is subjected to a diabolical attempt at discipline by *fines*, for trivial offenses, imposed by "fresh" boys (no older than themselves) who happen to be behind the counter, one may consider the claim of the boys to be well founded. Many corporations draw the reins too tight. Nothing is so conducive to dishonesty in a boy as the feeling that he is unfairly dealt with.

There is a great demand just now for franchises to lay underground conduits; Geo. S. Ladd, representing one company, and a Mr. McGrew another. The board of supervisors have laid the matter over for future consideration, or for the consideration of their successors, unless their palms are greased. As their successors come into power Monday, January 3d, and like all boards they will profess to be saints on entering office—but probably exit sinners—it behooves those desiring the franchise to put their hands in their pockets. The present board can only hold another meeting.

"'Tis a wicked world my masters."

San Francisco, Dec. 21, 1886.

Taking up the thread of the letter of December 21st, in regard to the Postal Telegraph Co., there seems to be no reason to change the opinion expressed as to the management, except that credit should be given for the selection of some able men for subordinate positions. They have induced Thomas H. Berry to resign the chief operatorship of the Western Union at Sacramento to accept a night chiefship with them in San Francisco. The reason for this is obvious. Berry is the only man on this coast of commanding ability as an electrician, practical wireman, and one of the best operators, who would change without greater lucrative inducements being offered; but some of the knowing ones declare that Berry will receive a private *bonus* from the manager and chief operator, as without him they would apparently have to send east for a man to put up a duplex, "quad," or even a set of Milliken repeaters.

That the change may prove advantageous to Mr. Berry is the heartfelt wish of all the fraternity. Ben. C. Shearer, traffic chief of the Western Union at San Francisco is going across the way even at a less salary, while many of the best operators are going over at the same wages—$90 per month.

There must be something radically wrong when men will seek

> "Among strangers to find
> That repose, which at home
> They had sighed for in vain;"

or, in other words, better treatment. If the Postal Telegraph Company will fill their eastern offices with as good operators as they have here, the public may look for good service.

It is a pity, however, to see a man of Mr. Mackay's generous nature imposed on by incompetence. Many stories about the shocking manner in which the line was constructed have been heard. They have been regarded as possibly due to prejudice of rival builders; but a personal inspection of the line, as far as Port Costa, over the hills (it is on hills and side hills where the experienced line builder shows his "craft"), discloses a very bad job, notwithstanding the use of the best material; braces on the wrong side, and in many cases the pole bent with the strain. When the rainy season is past the evil of this lack of experience will manifest itself to Mr. Mackay's extra cost, and it is a pity, as he furnished *carte blanche* for expenses.

The board of trade of Los Angeles have got their ire aroused at the Western Union, because the Western Union, with a total disregard for public convenience, moved their main office to an out of the way place to reduce office rent. Their resolutions of condemnation, and liberal inducements to Mr. Mackay to run his wires to that city, were telegraphed broadcast. Mr. Jaynes has been in Los Angeles for some time adjusting and remedying this evil, and when he returns it is to be hoped he will be imbued with the necessity of putting new life into the Los Angeles management, which will keep pace with the growth and prosperity of that thriving city. It is second only to San Francisco in California, and third on this coast. The Western Union ought to "pension" Mr. Haines, or consign him to the editorship of his *Temperance Gazette*, where it is to be hoped he will be of more benefit than as the manager of Los Angeles' office.

There are a great number of aspirants to succeed Mr. Berry at Sacramento. The place was offered to Mr. B. C. Shearer, but he declined it to go to the Postal at less salary; that, however, does not deter J. E. Morris (the "beau brummel" of the Oakland ferryboats); Ed. Flanagan, assistant chief at Ogden, and John F. Allen, present night chief at Sacramento, and *ci devant* manager of that office. If any man is deserving of that office John F. Allen is, for his persistency and stubborn resolve command admiration. Many remember his endurance and pluck during the *strike* of 1883, when he never missed a night, and always put in his 12 hours during those 24 days.

It is to be hoped that the place will not be filled by bringing from the east some overworked man, broken in health and strength through the confinement and toil of an operating room and ready for any change, to serve his same hard masters here till he breaks down altogether, and is turned off to shift as best he can—perhaps to be cared for and at last buried by his fellow-craftsmen, like poor Moreland and others now at rest in the Odd Fellows' cemetery.

The old board of supervisors has given place to the new without granting franchises to any underground conduit company. Mayor Pond is opposed to wires being strung on poles through the city, as is also the chief engineer of the fire department, and it may be presumed Mr. Ladd will, at an early date, be granted a conduit franchise, and that an ordinance will be passed compelling all telegraph, telephone and electric light companies to use underground conduits.

The Western Union are stringing a copper wire from here to Ogden. This will be of incalculable benefit to them, as they have no wire that will "quad" to Ogden at present. The Postal, it was said, were also to string a copper wire; but so far they have only two No. 6 gauge iron wires on their poles. What they will do in the near future is a mere conjecture, but in some quarters the opinion is that they will "sell out."

San Francisco, Jan. 5, 1887.

LITERATURE.

REVIEWS.

The Electric Motor, and its Applications, by Thomas Commerford Martin and Joseph Wetzler. (With 200 illustrations.) New York: W. J. Johnston, 1887.

It is indeed a pleasant surprise to find, among the great number of recent works upon electrical subjects, one containing so much real information as this book, and information, too, which

Digitized by Google

is new and valuable. We have been thoroughly interested in reading the work, and have found it a comprehensive and thoroughly practical treatise upon the general subject with which it deals, and especially upon the subject of electric railways. Notwithstanding the extent of the popular interest which has been developed in this latter subject during the last three or four years, there is still a great dearth of popular knowledge relative thereto. That electricity may in some way be employed as the power for driving vehicles, is generally recognized, but in what particular manner it can be applied is, in the minds of the general public, very vague. A work such as this, therefore, giving in concise language and in terms not too technical, descriptions of the necessities, the experiments, and the realizations of electric motors and electric railways, will be cordially received and appreciated.

Without devoting too much attention to the consideration of elementary features, brief descriptions are given of the typical early motors, commencing with the experiments of Jacobi in driving a boat upon the Neva in 1838, and those of the Vermont blacksmith, Thomas Davenport, who, in 1833, instead of buying a stock of iron, invested his money in the electro-magnet, which led to his building an electric motor in 1837. These matters are followed by a few pages of more or less technical and theoretical consideration of the electrical transmission of power, after which comes the most important part of the book, namely, that treating of the modern electric railway. Those who have not familiarized themselves with the modern applications of electricity will be surprised upon learning to how great an extent the electric railway is already in practical use. The authors have been fortunate in securing descriptions of the very latest forms of motors, and of actual and proposed systems, thus rendering the work very complete to the present date.

The industrial applications of electric motors, as well as marine and aerial navigation, are other interesting topics receiving due consideration.

A word of commendation must be added for the attractive appearance bestowed upon the volume by the publisher, and for the abundance and quality of the illustrations.

PERIODICALS.

The American Railroad Journal and *Van Nostrand's Engineering Magazine*, have been united, appearing for January as *The Railroad and Engineering Journal*, in very handsome form, and with a variety of interesting contents, embracing the leading features of both its predecessors. Mr. N. M. Forney, having purchased the business of both publications, conducts the new journal as editor and proprietor. The January number gives a brief history of its progenitors, illustrated by a fac-simile of the title of the initial number of the *Railroad Journal*, January, 1832; the latter embellished with a woodcut of a locomotive and train of cars of the period. A wide range of subjects is treated, and the number is copiously illustrated. Readers of both earlier journals will find interest in the new journal of Mr. Forney.

RECENT PUBLICATIONS.

Abbott, Benjamin Vaughn. The Patent Laws of All Nations. Vol. I.—Algeria-Turkey. Vol. II.—United States, Wurtemburg, International Convention. Washington: *Charles R. Brodex.* 580 and 634 pp. 8°, sheep.

La Verite sur les Experiences de Creil, Extraite du Rapport, de M Maurice Lévy modifié par E. Boistel. Paris: *Georges Carré*, 1887. 50 pp. 4°.

Mourlon, Charles. La Téléphone Privée En Belgique. Extrait du *Mouvement Industriel Belge.* Bruxelles: not dated. 44 pp. illustr. 8°

Mourlon, Charles. Les Téléphones Usuels. Deuxième Édition, entièrement refondue avec 146 Figures dans le Txte et 11 Planches hors texte. Bruxelles, J. Lebègue et Cie., 1887. 8vo. pp. 324.

Myer, William G. Federal Decisions. Cases Argued and Determined in the Supreme, Circuit and District Courts of the United States. Comprising the Opinions of those Courts from the Time of their Organization to the Present Date. Vol xxv. Patents, Copyright and Trade Marks. Patents edited by W. D. Baldwin and Woodbury Lowerey. St. Louis: *The Gilbert Book Company*, 1886. 1232 pp. 8°., sheep.

CATALOGUES AND PAMPHLETS RECEIVED.

The Ball Electric Light Co. send us an extremely tasteful circular, daintily illustrated, setting forth a variety of electric lighting machinery and lamps supplied by them, with many testimonials to the efficiency of their system.

The Fuel-Gas and Electrical Engineering Co., limited, and the Westinghouse Electric Co., both of Pittsburg, Pa., issue a pamphlet of 77 pages, embracing forms of agreements, and other information, bearing upon the joint or separate introduction of the fuel-gas appliances of the former company and the electric lighting system of the latter company. The introductory matter comprises some account of the systems and appliances of both companies, of much interest to gas and electric light companies, as well as to the public. The forms of agreement given, contemplate exclusive licenses for the use of the patented appliances of either company, as well as licenses not exclusive.

The Vitrite and Luminoid Co. send us a sheet embracing a list of their patented fittings for incandescent lights, with uncommonly effective illustrations of the articles offered by them.

The Sprague Electric Railway and Motor Co.'s Catalogue "A."—Stationary Motors—is really a luxurious quarto pamphlet, of 45 pages. It includes some preliminary discussion of the problem of electric transmission of power, a brief account of the Sprague motor, and copies of actual records of the performance of some ten motors in use by purchasers for various purposes, making a very good exhibit. There is also included a list of the motors built by the Sprague company with their present location and occupation when known, accounting for 225 machines issued, Nos. 226-230 in stock, and Nos. 231-290 in course of construction.

We have received from the Van Depoele Electric Manufacturing Co., Chicago, a well illustrated pamphlet describing the Van Depoele system of electric railways, with an account of a number of successful introductions of electric traction by the company in several cities and towns in this country and Canada. The Van Depoele company has assumed a leading position in this growing branch of electrical application.

C. N. Caspar, Bookseller and Publisher, Milwaukee, Wis., issues a prospectus of a General Directory of the American Book, News and Stationery Trade and kindred branches.

Third Report of the Board of Commissioners of Electrical Subways of the City of Brooklyn, dated December 16th, 1886.

Messrs. Partrick and Carter send us their Catalogue of Electrical Supplies for 1887, embracing a very complete list of general electrical machinery and material.

ELECTRICAL NEWS AND NOTES.

EXAMINATION IN ELECTRICAL MEASUREMENTS.

COURSE IN ELECTRICAL ENGINEERING, CORNELL UNIVERSITY, ITHACA, N. Y.,—FALL TERM, 1886.

1. Define the ohm; the ampere; the volt. Also the legal ohm, ampere, and volt.

2. Describe briefly the method used by the British Association committee, and afterward by Lord Rayleigh, for determining the true value of the ohm. Show what quantities must be observed.

3. Describe and demonstrate Cary Foster's method of comparing resistances by means of the divided metre bridge. Show how this may be applied to calibrate the bridge wire and determine its resistance per unit length.

4. In determining H by means of the Kew magnetometer, show how the length of the deflecting magnet is eliminated, and explain the corrections for temperature and induction.

5. Deduce the expression for the potential due to a magnetic shell, and reduce to simplest form involving linear quantities, for a shell with a circular edge, for a point on the axis of the circle. Also find the expression for the force in the direction of the axis on a unit pole.

6. What is the advantage of the Helmholtz over the single coil tangent galvanometer? Why is the distance between coils made equal to their radius? Describe the "Vienna method" of measuring currents.

7. Describe briefly the two forms of Ayrton and Perry ammeters. State their advantages and disadvantages. Describe the Siemens ammeter (dynamometer form).

8 How can potentials be measured in legal volts? Describe some of the portable voltmeters. How does temperature affect their indications? Why?

9. What can you say of the use of cells as standards of difference of potential? Give briefly the method pursued by Lord Rayleigh to determine the E. M. F. of Clark's cells.

10. How is the influence of errors of observation on a result to be determined? Explain the bearing of this upon the number of places of significant figures to be retained. Apply to the case of the measurement of current by a tangent galvanometer and suppose deflections can be read only to tenths of a degree.

THE TELEPHONE CASE IN THE SUPREME COURT.

A JUNK SHOP MISSILE.

The N. Y. *Times* publishes a Washington telegram headed: "A bombshell for Bell. Startling charges in the telephone cases. Four 'revelations' in the Hill brief filed with the Supreme Court in Washington." This startling piece of news consists of certain oft-repeated charges that Prof. Bell obtained some part of his telephone invention from a surreptitious inspection of Gray's caveat, to which he was given access by examiner Wilber. People's memories are commonly very short when applied to facts that do not immediately concern their own interests. It may be worth while, therefore, to remind the public that Prof. Gray, in a lecture delivered at Chicago, early in the year 1876, awarded the discovery of the telephone, so far as it had then proceeded—and this was after his own caveat had been filed—to Mr. Alexander Graham Bell; that this public acknowledgment was reported by the Associated Press in the leading papers in the United States the next day; that this newspaper report was clipped out by Prof. Gray, and sent by him to Prof. Bell, with a letter appropriate to such an act of magnanimity, which letter has been exhibited in court more than once since that time. How "startling" the present revelation ought to be, we can only infer from this remarkable antecedent fact.—*Evening Post.*

Digitized by Google

POLARIZATION OF RESISTANCE COILS.

Dr. B. F. Thomas, State University, Columbus, Ohio, has the following interesting note in *Science*, for January 7.

In August last Professor Mendenhall in conversation with the writer, alluded to his observation of the polarization of certain resistance coils, and suggested an examination of the coils in this laboratory. The examination was made and the results stated in remarks upon Professor Mendenhall's paper at the Buffalo meeting of the American association. A brief account may not be without interest and value.

The idea entertained by Professor Mendenhall at the time seemed to be that the polarization was of a "statical" nature; the deflection obtained on connecting the coil, through which a current had been passed, with a galvanometer, being produced by the "residual charge." The examination of our coils was undertaken with the same idea, the "condenser discharge" method being made use of, substituting the coil under trial for the condenser. The galvanometer was a 6,000 ohm astatic Thomson, by Elliott Brothers, its needle making a vibration in about ten seconds. A Fuller cell and Sabine discharge key were used. Polarization was found in every coil in the laboratory, except in a standard B. A. unit from Elliott Brothers. It was also found in a Hartmann box loaned for examination by Messrs. Queen & Co. The effect was found to vary widely in different coils in the same box, particularly so in a box of 100,000 units from Elliott's, whose 40,000 coil gave 40 degrees deflection against six or seven degrees for any other coil in the box. On opening the box, it was found that the 40,000 coil had been heated till the paraffine had melted and some of it had run off, while the other coils were well covered, as usual in Elliott coils. The Hartmann box, whose coils were not paraffined, showed the effect more strongly than any except the 40,000 Elliott. It was observed that the coil terminal connected to the positive pole of the battery in charging, was itself positive in discharging; that reversing the battery reversed the discharge deflection; that the deflection was not momentary, as with condensers, but that it indicated a steady current, diminishing slowly, but not ceasing in some instances after eight or ten hours; that when the coil was charged by battery for several minutes, and then the current reversed and allowed to flow a few minutes longer, the discharge current was at first due to the last charging current, but after a time it ceased, and was followed by another discharge current due to the first charging. An experimental coil was then made up of 1,800 ohms of wire having unparaffined cotton insulation. It was wound on a warm rainy day, and tested immediately, showing the strongest polarization found, driving the spot of light violently off the scale. The coil was then baked in a hot air oven at 150° C. for an hour, and tested again when cool. No trace of polarization could then be found though the charging current was increased. The previous observations, of course, indicated electrolytic polarization as the disturbing cause; and the last showed, that, in the case of that coil, it was electrolysis of water absorbed from the air by the cotton insulation. The experimental coil was then heated, and soaked well with pure paraffine, and drained while hot until it seemed to be as nearly as possible in the same condition as the 40,000 Elliott coil, and tested when cool. No trace of polarization was shown. It was then put aside in the instrument case to see whether it could still absorb water enough to polarize. Ten days later, just after the Buffalo meeting, the coil was tested again and polarized strongly. On heating it again, the polarization entirely disappeared. A drop of hydrant water placed on the coil caused polarization to reappear in five seconds, and in five minutes the effect was so strong as to drive the needle to its stops.

The degree of error in measurement resulting from polarization was not examined, but Professor Mendenhall's statements show that it may be a considerable quantity.

It is obvious that unparaffined coils are, on this account, unsuited to the best work; also that coils well paraffined (as in the B. A. unit coil) or coils freshly baked and paraffined are free from such error.

The paraffining of ordinary coils, even when as thoroughly done as by the Elliotts, is not a permanent protection, probably because of cracking of the mass of paraffine, allowing vapor to reach the wire and insulation. A test will quickly determine the condition of any particular coil. A box might be made proof against polarization by filling entirely the space about the freshly baked coils with pure paraffine, just warm enough to flow freely. Temperature difficulties could be in part overcome by thermo-junctions, as in standards. Another, and on some accounts better plan would be to mount the coils in an impervious box with liquid-tight joints, and filling the interior with a petroleum oil, which may readily be found in market of such quality as to exhibit no polarization. With such a box, there need be no uncertainty as to the temperature of the coils.

A LEGAL BUREAU FOR THE NATIONAL ELECTRIC LIGHT ASSOCIATION.

At the Detroit meeting of the National Electric Light Association a paper was presented by Mr. Arthur Steuart upon the importance to all persons engaged in the electric lighting business of a means through which they could learn at a moderate cost the status of any patent upon apparatus which they are called upon or compelled to use, and it was pointed out that if the members of the association knew the exact status of the various patents relative to electric lighting apparatus they would save a large percentage of their present expenses.

The executive committee of the association have considered how best to accomplish this result. To do it thoroughly would entail a cost which, while they believe the members would be amply compensated for the outlay, they still feel themselves constrained not to impose upon them at this stage. The bureau has been organized, however, on the basis that each member himself bear the cost of the investigations made for him, leaving the future to determine whether the members will prefer this method or pay each an annual tax for the support of the bureau. The advantage of the latter method would be that the tax upon each member would be small, and there would be no restraint put upon them in making use of the department.

The following is the official announcement of the executive committee:

PHILADELPHIA, Pa., Dec. 27, 1886.

To the Members of the National Electric Light Association:

Pursuant to the resolution passed at the August meeting of the association at Detroit, a legal department to the bureau of statistics has been organized, and the use of it is now offered to the members. The executive committee have placed this department in the hands of Mr. Arthur Steuart, of Baltimore, and feel confident in recommending him as a gentleman of integrity and ability to the association.

OBJECT OF LEGAL DEPARTMENT.

The legal department is provided for the purpose of giving the members an opportunity of having:

1st. Their patents.

2d. Those under which they are licensees.

3d. Those upon which suit is threatened against them. And

4th. Those presented to them for investment; examined by a competent patent lawyer and passed upon at the minimum cost.

PLAN OF WORK.

The method of work will be as follows:

When a patent is submitted to the general counsel for examination, he will himself, or by competent agent, make a thorough examination of all American and foreign patents, upon the same subject, as well as other sources of information available for this purpose, and prepare as elaborate an opinion as may be necessary with reference to the validity, scope and freedom from infringement of the patent. This opinion when prepared will be submitted to a committee consisting of the custodian of the bureau of statistics, and such other persons as may be designated by the executive committee, who will consider it with the general counsel, and certify their conclusions to the member making the inquiry. This opinion will be filed and will become a part of the record of the bureau.

CHARGES.

All work done by the department must be paid for by the member ordering it.

In consequence of the varied character of the work it is impossible to fix any scale of prices, so that the members are requested to arrange with the counsel the matter of charges before work is begun.

In the event of any question arising with reference to the amount to be paid for any particular piece of work, the matter can be referred to the executive committee, whose decision will be binding upon both member and counsel.

For the convenience of members, it is stated that Mr. Steuart has an office in Washington, at No. 605 Seventh street; in Baltimore, at No. 213 East German street, and in New York, at No. 137 Broadway; so that if consultation with him is desired, it can be had in the place most convenient to the member, by appointment. All communications by mail should be addressed to Baltimore.

ANOTHER NEW APPLICATION OF ELECTRICITY.

It is stated in a French paper that Prof. Place, of the Cavalry School of Saumur, has recently applied electricity with great success to horses which prove refractory while being shod. A vicious beast will often give much trouble in shoeing. M. Place's method renders it at once tractable, and permanently cures its aversion to the forge. An electric shock is given through a bridle of special form.

THE LIGHT FROM COAL.

One pound of coal, according to recent Franklin Institute tests, will yield an amount of light averaging 150 candles per hour with the electric arc light (about 60 per cent. of this if glass shades are used), 20 candles with incandescent lamps, and 14 to 17 candles with gas. In this estimate it is assumed that steam coal is burned under a good boiler for the electric lights, and that the gas is obtained from a bituminous coal.

Digitized by Google

A NEW UNDERGROUND CONDUIT.

The Hurlbut Flexible Conduit Co. exhibit specimens of their conduit at 157 Broadway, New York. It would seem to merit examination and attention on the part of all interested in underground work. It is made of vitrified fire clay, the joints constitute an essential feature, being made sufficiently flexible to meet any ordinary strains, and remaining, it is claimed, water and gas tight.

ELECTRIC LIGHT LITIGATION.

At Trenton, N. J., on December 23, the Edison Electric Light Co. began 11 suits against Westinghouse, Church, Kerr & Co. representing the Westinghouse Electric company, of Pittsburg, for injunctions and damages for the infringement of electric light patents.

ELECTRIC LIGHTING AT CANNOCK CHASE COLLIERIES.

During the meeting of the British Association a paper was read on this subject by A. Sopwith, which has some points of interest. The author pointed out the convenience and economy in utilizing the ventilating fan engines for working dynamos, on account of the regularity of speed—which apart from the requirements of an installation is kept within a limit of 1 to 3 per cent., such variation being a gradual diminution or increase—and the fact that such engines run continuously night and day. The fan itself acts to some extent as a regulator, as the tendency to run away on switching out of lights is modified by the increasing resistance of the air. The addition of counter-shafting in cases of slow running fans, or single pulleys in case of quick running fans, is an easy and inexpensive matter.

Allusion was made to the small extra consumption of coal in practice, and the merely nominal value of the slack which is consumed. In further connection with the working expenses, viz., replacement of lamps, it was mentioned that the underground workings in vicinity of shafts extending to 200 or 300 yards—admit of lamps being worked considerably below power with sufficient effectiveness, and actual lives were given—including breakages—showing at one pit an average of 2270 hours. The men who are required to act as examiners of machinery, and have no specifically regular work to do otherwise, replace lamps and attend to any occasional work connected with installation. As a matter of fact the three installations now working at Cannock Chase have not necessitated the employment of an extra man.

The only original feature—at least the author presumed it to be so—is the utilization of old iron and steel pit ropes for main and branch conductors. From four to five miles of ropes are worn out annually, varying from $\frac{5}{8}$in. to $1\frac{1}{2}$in. diameter and over. In the case of shafts, in order to avoid the injurious effects of water, the ropes are encased in wood boxes strung down the side of shaft, and roughly insulated on brackets. Underground, one of the ropes is simply wrapped with old battice cloth or tarpaulin. On the surface the ropes are laid in brick channels filled in with gas tar and coal dust, but it appears from the last trials that it is sufficient to lay the ropes side by side in the same material; there is no appreciable loss of current.—*Engineer and Trades Advertiser* (Glasgow).

NEW SUBWAY MANAGEMENT.

At the annual meeting of the New York Subway Construction Co., held recently, new directors and officers were elected. Edward Lauterbach was chosen president, William H. Woolverton, president of the New York Transfer Co., vice-president; A. S. Dodd, treasurer of the Metropolitan Telephone Co., treasurer, and William J. Sefton, secretary. The board of directors will be composed of the president and vice-president; E. E. Gedney, cashier of the North River Bank; Theodore N. Vail, president of the Metropolitan Telephone Co.; Robert M. Galloway, vice-president of the Manhattan Elevated Railroad; Edward J. Hall, Jr., general manager of the American Telegraph and Telephone Co.; Richard A. Elmer, president of the American Surety Co.; Frederick Lovejoy, president of the Ball Electric Light Co., and Samuel Carpenter, general passenger agent of the Pennsylvania road and president of the Iron Steamboat Co.

Mr. Lauterbach in his report rehearsed the history and present condition of the company, and suggestions were made looking toward ample preparations for extensive work in the spring. This work will be done by a sub-construction company, to be known as the Phœnix Construction Co. Mr. Lauterbach said that the names of its directors would not be given to the public just yet, as the organization was not yet complete. It is expected that its composition will show the pro-rata interest of the leading telegraph, telephone and electric light companies in the new method of work. It has already secured the contract for 800 miles of duct, and it will deposit a bond with the Construction company as security for the faithful performance of the contract, which in turn will protect the bond of the Subway Construction Co. with the commission. A board of engineers, composed of representatives of the companies, will select the materials for approval.—*Electrical World.*

THE TELEPHONE.

The following statistics are from a recent pamphlet received by the secretary of the National Telephone Association, from M. Berthon, of Paris.

Countries.	Exchanges.	Subscribers.	Largest Exchange.	No. of sub'rs in largest exchange.
Germany	91	14,733	Berlin	4,248
Austria	11	3,032	Vienna	946
Belgium	7	3,365	Antwerp	1,020
Denmark	2	1,370	Copenhagen	1,336
Spain	3	594	Barcelona	300
France	20	7,175	Paris	4,054
Great Britain	89	15,114	London	4,193
Italy	16	8,346	Rome	2,054
Holland	8	2,493	Amsterdam	1,195
Portugal	2	350		
Russia	20	5,280	St. Petersburg	1,100
Sweden	15	5,705	Stockholm	3,825
Switzerland	36	4,900	Geneva	1,068
Total	320	72,457		

The government bill in the suit against the American Bell company in Massachusetts was filed at Boston, on January 13. The defendants have till the first Monday in March, to file an answer, and the beginning of the trial may be reached five or six weeks later. The bill is practically the same as that filed at Columbus. The chief point of novelty is alleged invalidity because Bell did not file a model, in compliance with patent office rules.

The Supreme Court at Washington, has begun the hearing of argument in the appealed telephone cases. It is expected that all questions involved in the various attacks that have been made upon the Bell patent will be finally determined by the court in passing upon the appeals. Seven justices sit in the case, Justice Woods being absent, and Justice Gray declining to sit on account of the interests of some of his relations in the stock of the American Bell Telephone Co.

English and American Telephone Charges.

According to a recent statement, says the *Electrical Review*, London, the charges for telephonic service in this country compare very favorably with those which prevail on the other side of the Atlantic. In New York, the annual exchange rate is £31 5s.; in Chicago, £26; in Philadelphia and Boston, £25; and in Baltimore and St. Louis, £21. In the United Kingdom the rates are as follows: London, Liverpool, Glasgow and Manchester, £20; Edinburgh, £15; Bristol, 15; Sunderland, £14; Dublin and Newcastle, £12; Plymouth, Bournemouth and Portsmouth, only £10 per annum.

Belgium—Long-distance telephony is coming more and more into use. By ministerial decree the systems of Brussels, Louviere, Charleroi, and Mons have been joined, and communication was to be opened late in December. Negotiations are pending between Belgium and Germany for the establishment of a telephone service between these countries. Direct communication between Berlin and Brussels will not be attempted; but a line will be established between Brussels and Verviers, which might possibly be extended to Cologne.

SUBMARINE CABLES.

The Commercial Cable Co. continues to hold its own in the transatlantic competition. The excellence of its service as well as its pluck and its liberal business policy commend it to the esteem of the business world. The munificence of Mr. Mackay has again rewarded handsomely the faithfulness of the staff, the employés in this country and Europe having received a Christmas gift of a half month's salary.

Lieut. I. H. Weber, of the United States Signal Corps, has successfully repaired the cable across Vineyard Sound, cut by the steamship "Wilkesbarre" some time since. The work of securing the cable and splicing it in two places proved a very difficult undertaking, requiring eight days of constant labor. The expense to the government for this work will reach the sum of $600. A sign, with letters of unusual size, has been placed at both landing places, and can be plainly seen for a long distance out in the Sound.

ELECTRIC LIGHT AND POWER.

The experts who have been examining the feasibility of electric motors for the Third avenue surface road have reported that such a motive power is entirely practicable. The only question now seems to be one of expense. It will be a fortunate thing for New York if the company finds an efficient electrical system that will be cheap enough for its purpose. In that event we may hope to see the city rid at no very distant day of horses as a motive power on street car lines. To get rid of the many thousands of horses so employed would add to the cleanliness and health of the city, and be a great gain in the way of saving unnecessary suffering to animals.

Digitized by Google

The Charlestown (Mass.) Gas and Electric Light Co. have a very efficient power plant. The steam plant as constructed consists of a six-foot tubular boiler set with a Jarvis patent setting, and an Armington & Sims engine, and connected direct with the dynamos by belting, no shafting being used. By the use of the National Feed Water Heater the temperature of the water is raised 210 degrees F. and there maintained. At the Charlestown lighting station the fuel used is what is called breeze or coke screenings. This fuel is thoroughly wet before firing, taking about 40 per cent. of moisture. In the process of burning, the moisture in the coke is converted into hydrogen gas; the boiler furnace is so arranged that hot air is delivered on top of the fire; this uniting with the hydrogen gas from the moist coke makes a hydro-oxygen or compound blowpipe flame, the hottest flame known to science, and the result is the boiler furnace is filled with a volume of gas flame, using fuel that is supposed to have all the gas taken out of it in the retorts. When this class of fuel is sold, it generally brings about $1 a ton. Taking it on this basis it costs the Charlestown Gas Co. about $1.50 a night for fuel to run all night 40 full arc lamps.

The Lynn (Mass.) Electric Lighting Co. have in use one 100 h. p. and four 60 h. p. Westinghouse engines; seven 30 light, one 45 light Thomson-Houston arc dynamos and one 200 light incandescent dynamo of the same make. All were running to full capacity in December, with a demand for more lamps.

The following is the list of prices with which the Boston Electric Light Co.—formerly the Brush and Merchants' companies—begins the new year:

ARC LIGHTS.

1	Arc lamp,	Contract for	12	Months.....	75	cents	per day.
1	"	"	6	"	80	"	"
1	"	"	3	"	90	"	"
2	Arc lamps	"	12	" ..each	70	"	"
2	"	"	6	" .. "	75	"	"
2	"	"	3	" .. "	85	"	"
3 or 4	"	"	12	" .. "	65	"	"
3 or 4	"	"	6	" .. "	70	"	"
3 or 4	"	"	3	" .. "	80	"	"
5 to 9	"	"	12	" .. "	60	"	"
5 to 9	"	"	6	" .. "	65	"	"
5 to 9	"	"	3	" .. "	75	"	"
10	"	"	12	" .. "	50	"	"
10	"	"	6	" .. "	55	"	"
10	"	"	3	" .. "	65	"	"

INCANDESCENT LIGHTING.

For 125 c. p. lamps, in series of three.

Contract for	12	months.....	each	50	cents	per day.
"	6	"	"	55	"	"
"	3	"	"	60	"	"

For 60 c. p. lamps, in series of three.

Contract for	12	months.....	each	30	cents	per day.
"	6	"	"	35	"	"
"	3	"	"	40	"	"

For 16 c. p. lamps, in series of eight or its multiple, special rates will be made.

The Edison Electric Illuminating Co., Lawrence, Mass., runs a plant of a capacity of 5,400 10 c. p. lamps—including 1,000 municipal lamps. Their power plant includes two 120 h. p., two 80 h. p., and one 35 h. p. engines. 65 miles of wire are used in the street circuits. The underground system embraces over six miles of tubes, aggregating 18 miles of single conductor. Current is also supplied for 28 electric motors, ranging from one-half to 6 h. p., and running printing presses, elevators, lathes, &c., in various parts of the city. There are the following isolated lighting plants in Lawrence—Pemberton mills, 650 lamps; Arlington mills, 425 lamps; Russell paper mills, 200 lamps; Naumkeag mills, 550 lamps; Upton's Glue Works, 150 lamps.

Manchester, Iowa, will be lighted by electricity. For further information address E. F. Kiem, Dubuque, Iowa.

Webster City, Iowa, will be lighted by electricity. W. C. Wilson, and others, are interested.

Fort Edward is to be lighted by electricity. For further information address Charles H. Hooper.

Lakewood, N. J. will be lighted by electricity. Address C. H. Kimball.

The Badger Electric Light Co., Racine, Wis., is making extensive improvements to its plant.

The Electric Light Co., Belvidere, N. J., will erect new plants at Washington and Hackettstown.

S. Pickering, Cedar, Ky., will establish an electric plant in Tampa, Fla.

East Weymouth, Mass., will be lighted by electricity. Address C. R. Greely or Wm. T. Rice.

The Hempstead Gas Light Co., has received the contract to illuminate the village of Hempstead, N. Y., with electricity.

A stock company is being formed at Winchester, Va., to erect an electric light plant. Address E. Y. Henkle, box 176 Winchester avenue.

The success of the Van Depoele road at Scranton, has been so great that two new companies have been chartered to construct and operate separate lines in that city, and it is said that yet another is contemplated. The present road is 2¼ miles long. Although started about December 1st, since when the track has been, much of the time, in the worst possible condition, its success has been so great, that more cars are ordered. It is said that there is some prospect of the removal to Scranton of the works of the Van Depoele company.

New Incorporations.

The Watervliet Electric Light Co., Watervliet, N. Y. Capital stock, $50,000. Thomas Knowlson, and others, incorporators.

The New York Safety Light, Heat and Power Co., New York city, N. Y. Capital stock, $250,000. Caleb H. Jackson, Pittsburg, and others, incorporators.

The Ashville Electric Light Co., Ashville, N. C. Capital stock, $15,000. J. G. Martin, and others, incorporators.

The Whitewater Electric Light Co., Whitewater, Wis. Capital stock, $25,000. O. P. Posey, and others, incorporators.

The Edison Electric Illuminating Co., Birmingham, Ala. Capital stock, $75,000.

The Plattsburgh Electric Co., Plattsburgh, N.Y. Capital stock, $12,000. George D. Dunham, and others, incorporators.

The Traders Electric Light Co., Biddeford, Me. Capital stock, $20,000. President, O. F. Page.

The Boston Electric Light Co., Portland, Me. Capital stock, $1,000,000. President, Fred. A. Gilbert, New Haven, Conn.

The Norwalk Light and Power Co., Norwalk, Ohio. Capital stock, $25,000. C. H. Gallup, and others, incorporators.

The Litchfield, Ill., Electric Light and Power Co., H. H. Beach, Robt. McWilliams, and others, incorporators.

The Franklin Electric Light Co., Montague, Mass. Capital stock, $5,000. W. D. Russell, and others, incorporators.

The Naugatuck Electric Light Co., Naugatuck, Conn. Capital stock, $15,000. E. H. Carrington, and others, incorporators.

The Litchfield Electric Light and Power Co., Litchfield, Ill. Capital stock, $15,000. Henry H. Beach, and others, incorporators.

The Plymouth Light, Heat and Power Co., Plymouth, Mass. Capital stock $15,050. Treasurer, George W. Shonk.

The Hillsdale Electric Light Co., Hillsdale, Mich. Capital stock, $15,000. Henry A. Branch, and others, incorporators.

The Wagner-Fisher and Electric Light and Power Co., Jefferson City, Mo. Capital stock, $18,000. W. W. Wagner, and others, incorporators.

The Greenfield Electric Light and Power Co., Greenfield, Mass. Capital stock, $10,000. John H. Sanderson, and others, incorporators.

The Standard Electric Light Co., Chicago, Ill. Capital stock, $300,000. Lucius J. M. Malmin, and others, incorporators.

Meriden Electric Light Co., Meriden, Conn. Capital stock, $35,000. A. Chamberlain, and others, incorporators.

The Fort Dodge Electric Light Co., Fort Dodge, Iowa. Capital stock, $25,000. President, L. Blanden.

The Edison Electric Light Co., Philadelphia, Pa. Capital stock, $1,000,000. Treasurer, Philip F. Kelly, 3d and Chestnut streets.

The Lyons Electric Light and Power Co., Lyons, Kas. Capital stock, $30,000. President, Seth Warren, Biddeford, Me.

The Saco and Biddeford Electric Light Co., Saco, Me. Capital stock, $10,000. President, Seth Warren, Biddeford, Me.

The Buffalo Electric Light and Power Co., Buffalo, N. Y. Capital stock, $10,000. Chas. G. Curtis, and others, incorporators.

Foreign.

Hawaii—The royal palace is now lighted by electricity, and Honolulu is soon to have an electric light plant.

Hungary.—Buda-Pesth seems likely to have an electrical railway soon. The project has been on foot some months. A concession is expected shortly from the city council. The contractors for the work will probably be Messrs. Lindheim & Co. of Vienna; Siemens & Halske, of Berlin; and Moriz Balázs, of Buda-Pesth.

Austria—In a paper read before the Vienna Society of Electricians, Mr. F. Ross gave some figures showing the actual working cost of the electric light in certain theatres, where it has been in use for a sufficiently long period for a definite estimate to be formed. The prices quoted exhibited extreme variations; for instance, at Carlsbad, where the motive power is obtained from a gas engine, 1,000 ampere hours at 100 volts, costs $13,00, while at Brunn, with steam power, the cost is only $4,35. At Prague, also with steam power, the cost is $6.25.

Brazil—It is stated that the Julien system of electric traction will shortly be introduced on the Rio de Janeiro tramways. The first trials will take place at the commencement of the year.

Digitized by Google

MANUFACTURING AND TRADE NOTES.

There is more demand for electric lights from abroad just now than ever before. The American Electric Manufacturing Co. has made a happy combination. It has arranged with the well-known electrical firm of Wockatz & Co., of Gothenburg, Sweden. The firm is to become the wholesale agents of the American Electric Manufacturing Co. for Norway and Sweden. They have done a very large business for the Edison company, and they expect to sell very large amounts of arc light apparatus. The arc electric light plants have not been so extensively handled abroad as the incandescent; but this new deal of the American company will doubtless give an impetus to arc lighting in the old world.

The Lane & Bodley Co., of Cincinnati, have been awarded the contract for a pair of 24 x 60 Corliss engines, four boilers, cable driving and tension machinery, a complete plant for two cables for the Mt. Auburn Cable railroad of that city.

Messrs. Seth W. Fuller & Holtzer, of Boston, have recently added to their list of electrical apparatus an electric wind indicator, for residences, hotels and public buildings. The indicator, having a compass dial and pointer, is connected by an electric cable with a weather vane on the roof. It may thus be placed in any desired room of a house or public building. It may be worked on either closed or open circuit. In the former case the indication of the direction of the wind is continuous, the pointer following constantly the motion of the wind vane. When the open circuit plan is used an indication may be obtained whenever desired, by pressing a contact knob at the indicator.

The Edison Machine Works have established a department for the manufacture and supply of shafting, pulleys, hangers, couplings, &c., for general purposes. Their facilities for the manufacture of heavy and light machinery are such that they should be able to compete successfully with the best and cheapest in the line mentioned above. They have established a salesroom at 121 Chambers street, N. Y.

The Splitdorf Insulated Wire Co., Brooklyn, capital stock $10,000, has been incorporated. Henry Splitdorf, New York city, and others, incorporators.

The Clark Electric Co., Owego, N. Y., has been incorporated. Capital stock, $3,000,000. James H. Seymour and others, incorporators.

The Farmer Electric Manufacturing Co., Portland, Me., has been incorporated. Capital stock, $1,000.000. President, Moses G. Farmer, Eliot, Me.

The Chrome Steel Works, of Brooklyn, N. Y., desire the address of every reader of this paper who has in use a stamp mill or rock crusher, for the purpose of making them a guarantee proposition which will enable the user to make a trial and test of their chrome steel shoes, dies and crusher plates.

From *El nacional*, of Lima, Monday, Nov. 15th, 1886. "It is proven that the Yankees show wit in the recommending of their inventions and of the goods they offer for sale. We have before us a pamphlet of *Mr.* Chrome Steel Works, who offers the best steel for all kinds of work, and as a proof he asserts that he and a friend of his have escaped four times from the penitentiaries of as many different cities in that country, thanks to his profound acquirements and to the steel he employed to cut the safety-bars of the prisons mentioned. In order to prove finally that he has no rival, he states that he is at present in the penitentiary in Brooklyn, and that his escape is impossible because the doors and safety bars of the cells are of steel made by himself."

Messrs. Walter T. Glover & Co., London, electrical wire and cable manufacturers, announce that Mr. Henry Edmunds, of 2 Victoria Mansions, Westminster, has now become a partner in their firm, and will have the conduct of their London business at 10 Hatton Garden, E. C. Mr. Edmunds' name is well known in connection with the introduction into Great Britain of the Farmer-Wallace, Brush, and Hochhausen systems of electric lighting; and, into the United States, of the Swan incandescent lamp, and the Vitrite Co.'s. patents.

The firm of Vallee & Bro., 1210 Market street, Philadelphia, manufacturers of and dealers in electrical supplies, and contractors for electric and pneumatic work, has been dissolved, and the business reorganized under the style of Vallee Bros. & Co. A change of location has been made to 932 Arch street.

PERSONAL MENTION.

On Christmas Eve the employés of the Government Telegraph Service at Battleford, Saskatchewan Ter., called upon Mr. Hartley Gisborne, district superintendent, and for themselves and absent associates presented him with an address and a rich silver tobacco box, as a small token of their personal esteem, and recognition of his ability as a superintendent.

Mr. Thomas A. Edison has been ill with a slight attack of pneumonia at his house in Llewellyn Park, Orange, N. J., but, happily, is now reported to be beyond all danger.

INVENTORS' RECORD.

Prepared expressly for THE ELECTRICIAN AND ELECTRICAL ENGINEER, *by* Pope & Edgecomb, *Solicitors of Patents for Electrical Inventions, 11 Wall Street, New York city.*

CLASSIFIED LIST OF UNITED STATES ELECTRICAL PATENTS.

From December 21, 1886, to January 11, 1887 (inclusive).

Alarms and Signals:—*Non-Interfering Street Box for Fire Alarm Telegraph Systems*, A. Anderson, 354,761. *Annunciator and Alarm Signal*, J. W. Frost, 354,856. *Electric Fire Alarm or Thermostat*, C. E. Kells, Jr., reissue, 10,791, December 21. *Electric Value-Controller, and Thermostat Combined*, F. A. Price, 354,932, December 28. *Electrical Indicator*, W. H. Chapman and B. C. Donahue, 355,382. *Electric Alarm*, C. E. Chinnock, 355,384. *Signal Box*, A. Meyer, 355,548, January 4. *Electric Annunciator*, P. Seiler, 355,791. *Safe-Guard Against Boiler Explosions*, J. E. Siebel, 355,793. *Electric Push Button*, F. R. Brainerd, 355,858, January 11.

Clocks:—*Electric Clock-Winding Attachment*, J. Broich and A. E. G. Luebke, 355,434, January 4. *Circuit-Breaker for Primary Electric Clocks*, V. Himmer, 355,820. *Primary Electric Clock*, same, 356,069, January 11.

Conductors, Insulators, Supports and Systems:—*Underground Conduit*, J. S. Du Bois, 354,892. *Underground Electrical Conductor*, F. B. Crocker, 355,063. *Wire and Pipe Supporting and Snow Removing Apparatus*, S. D. Locke, 355,185, December 28. *Underground Wire and Steam Street Conduit*, same, 355,330. *Terminal for Electric Conductors*, F. C. Watkins, 355,423. *Cable Hanger*, G. L. Wiley, 355,491, 355,492 and 355,493, January 4. *Conduit for Electric Wires*, G. D. Sutton, 355,798. *Machine for Covering Conductors with Lead*, E. C. Sloan, 355,843. *Apparatus for Incasing Wires with Lead*, same, 355,844. *Electrical Subway*, R. A. Denison, 355,867, January 11. *Pin-Holder for Electric Wire Insulators*, M. Hanks, 355,165, December 28.

Dynamos and Motors:—*Dynamo-Electric Machine*, E. A. Sperry, 354,945 and 354,946, December 28. *Dynamo-Electric Machine or Motor*, C. G. Curtis and F. B. Crocker, 354,538. *Dynamo-Electric Machine and Electric Motor*, C. G. Curtis and S. S. Wheeler, 354,539; S. S. Wheeler and C. G. Curtis, 354,588, December 21. *Electric Motor*, H. M. Paine, 355,024, December 28; J. H. Linville, 355,771, January 11. *Electric Motor for Railways*, W. H. Knight, 354,793. *Regulator for Dynamo-Electric Machines*, J. H. Irwin, 354,791, December 21. *Regulator for Electro-Magnetic Motors*, W. L. Stevens, 355,729. *Current Collecting Device for Dynamo-Electric Machines*, D. Williamson, 355,738, January 11.

Galvanic Batteries:—*Electrolyte and Depolarizer for Galvanic Batteries*, W. C. Quimby, 355,412, January 4.

Ignition:—*Electric Igniter for Gas Engines*, F. Bain, 354,881, December 28.

Lamps and Appurtenances:—*Electric Lamp*, H. R. Boissier, 354,530; C. D. Jenney, 354,639, December 21. *Electric Arc Lamp*, R. F. Jones, 355,172, J. Brady, 355,120, December 28. *Incandescent Lamp*, A. S. Hickley, 354,788, December 21, W. L. Voelker, 356,019, January 11. *Electric Lighting*, J. E. H. Gordon, 354,781. *System of Electric Lighting*, same, 354,783. *Means for Lighting Railway and other Signal Lanterns by Electricity*, same, 354,782. *Cut-Out for Electric Arc Lamps*, W. C. Walter, 354,847, December 21. *Mast-Arm for Electric Lamps*, T. B. Keeler, 355,400. *Method of Suspending Electric Lights*, H. F. Edwards, 355,443. *Safety Circuit for Electric Lights*, E. T. Greenfield, 355,446, January 4. *Process of Manufacturing Carbons for Electrical Purposes*, W. L. Voelker, 356,020. *Method of Drying Incandescent Electric Lamp Bulbs*, A. L. Reinmann, 355,714, January 11.

Measurement:—*Electric Meter*, J. E. H. Gordon, 355,871, January 11.

Miscellaneous:—*Electrical Distributor*, R. H Mather, 354,606. *Electro-Magnetic Boiler Cleaner*, G. W. Hart, 354,637. *Sewerage System*, J. H. Clark, 354,688. *Electrical Pumping Apparatus*, M. A. and A. Michales, 354,838. *Electric Circuit Closer*, J. Geary, 354,858, December 21. *Circuit Closer*, W. B. Manny, 354,919. *Process of Extracting Nickel and Cobalt from Ores*, D. Mindeleff, 354,923. *Electro-Therapeutic Appliance*, J. Charles, 355,059. *Electric Heat Regulator*, R. L. Guion, 355,164, December 28. *Coupling for Electric Conducting Wires*, G. A. Carpenter, 355,380. *Prevention of Induction in Electric Circuits*, J. O. Stockwell, 355,420. *Coupling for Electric Wires*, H. Howson, 355,611, January 4. *Electro-Magnetic Cut-Out*, F. H. Wilmarth, 355,739. *Means for Preventing Noise Occasioned by Vibrations of Telegraph Wires*, P. E. Bardonnaut, 355,753. *Magnetic Water-Level Indicator*, J. J. Ghegan, 355,815. *Electro-Magnetic Regulator for Valves*, G. M. Sternberg, 355,892. *Electro-Magnetic Regulator for Dampers and Valves*, same, 355,893 and 355,894. *Electro-Magnetic Regulator for Valves and Dampers*, G. M. Sternberg and A. A. Lehman, 355,895. *Electric Cut-Out*, A. E. Paige, 356,008. *Controlling Valves by Electricity*, F. Bain, 356,024. *Electric Current Indicator*, J. W. Howell, 356,041 and 356,042, January 11.

Railways and Appliances:—*Railroad Signal*, G. D. Burton, 354,827, December 21; S. T. Street, 354,992. *Signaling Apparatus for Railway Trains*, J. H. Bickford, 355,055, December 28. *Railway Telegraphy*, L. J. Phelps, 355,468, 355,469, and 355,470, January 4.

Telegraphs:—*Telegraph Instrument*, J. Steiner, 354,814 and 354,815, December 21. *Telegraphic Switch*, J. Absterdam, 354,996, December 28. *Telegraph Receiving Instrument*, W. Arthur, 355,431. *Printing Telegraph*, D. E. Pike, 355,662, January 4. *Telegraphy*, R. G. Brown, 355,860, January 11.

Telephones, Systems and Apparatus:—*Telephone*, C. E. Egan, 355,685 and 355,687. *Magneto-Telephone*, H. E. Waite, 355,734, January 11. *Telephone Transmitter*, D. Drawbaugh, 354,541 and 354,542; W. L. Voelker, 354,818, December 21; F. C. Watkins, 355,426, January 4; C. E. Egan, 355,686; H. P. Pratt and L. O. McPherson, 355,838; J. C. H. Stut, 355,952; J. P. Freeman, 356,034, January 11. *Telephone Receiver*, H. A. Schneekloth, 355,032; A. E. Dolbear, 355,149, December 28; F. C. Watkins, 355,424; January 4. *Telephonic Apparatus*, J. F. McLaughlin, 355,189. *Telephone Appliance*, same, 355,190. *Telephone Check Apparatus*, D. J. Smith and D. Sinclair, 355,226. *Mechanical Telephone Exchange*, G. F. Shaver, 354,942, December 28. *Mechanical Telephone*, T. H. Weinhaus, 355,363, *Telephone Signal*, C. E. Chinnock, 355,383. *Central Office Telephone Switch-Board*, F. C. Watkins, 355,425, January 4. *Telephone Cabinet*, C. Wittenberg, 355,741. *Alarm and Register Attachment for Telephones*, same, 355,742. *Telephone Register*, same, 355,743. *Telephone-Toll Collector and Register*, same 355,744 and 355,746. *Register Attachment for Telephones*, same, 355,745. *Telephone Switch System*, C. C. Gould and W. Smith, 355,928, and 355,929. *Grounding Switch for Telephone Instruments*, C. C. Gould, 356,038. *Telephone Switch*, C. A. Hitchcock and W. Burnley, 356,040, January 11.

Digitized by Google

THE ELECTRICIAN
AND
ELECTRICAL ENGINEER.

Conducted by F. L. POPE. G. M. PHELPS, JR., R. W. POPE, } Associate Editors.

PUBLISHED MONTHLY BY

THE ELECTRICAL PUBLISHING CO.,

115 Nassau Street, New York city.

European Agent, F. H. WEBB, 4, The Sanctuary, Westminster London, S.W., Eng.

TERMS OF SUBSCRIPTION.

United States and Canada,	per annum,	$3.00
Four or more Copies, in Clubs (each)	"	2.50
One Copy, Four Months,		1.00
Great Britain and other Foreign Countries within the Postal Union	"	4.00
Single Copies,		.25

[*Entered at the Post Office at New York, N. Y., as second class mail matter.*]

EDITORIAL ANNOUNCEMENTS.

Addresses.—*Business letters should be addressed and drafts, checks and post-office orders made payable to the order of the* ELECTRICAL PUBLISHING CO. *Communications for the attention of the editors should be addressed,* EDITOR OF THE ELECTRICIAN AND ELECTRICAL ENGINEER, 115 *Nassau Street, New York city.*

Communications *suitable for our columns will be welcomed from any quarter. Discussions of subjects relating to all branches of electro-technical work, by persons practically acquainted with them, are especially desired. Unavailable and rejected manuscripts will be returned only when accompanied by the necessary postage.*

Advertisements.—*We can entertain no proposition to publish anything for pay, or in consideration of advertising patronage, except in our advertising columns. Our editorial columns will express our own opinions only, and we shall present in other columns only such matter as we consider of interest or value to our readers*

NEW YORK, MARCH, 1887.

ANNOUNCEMENT TO SUBSCRIBERS.

WE are pleased to recognize the fact that a principal source of the growth of our subscription list is the favorable commendation of the ELECTRICIAN AND ELECTRICAL ENGINEER by those who are already subscribers, to their friends and acquaintances

We shall continue our endeavors to deserve your appreciation and good-will, by keeping up, and if possible improving the quality of our paper. To any of our present readers who may find it in their way to increase our list, we offer rates for 1887 as follows:

For your own subscription	and	1	new name	.....		$5 00
"	"	"	" 2	"	.....	7 00
"	"	"	" 3	"	.....	9 00
"	"	"	" 4	"	.....	10 00

This offer will hold good until April 1st.

The *Telegraphic Journal and Electrical Review*, London, will be supplied for one year in conjunction with the ELECTRICIAN AND ELECTRICAL ENGINEER for the additional sum of $4.00 with any subscription.

In addition to the usual methods prescribed for making remittances, money orders issued by the American, United States or Wells Fargo express companies will be found safe, cheap, and convenient.

Very respectfully yours,

ELECTRICAL PUBLISHING CO.,
115 Nassau St., New York.

SPECIAL ANNOUNCEMENT.

BY arrangement with the *Electrical World*, New York, we are able to make the attractive offer of that valuable and enterprising weekly journal in conjunction with the ELECTRICIAN AND ELECTRICAL ENGINEER for one year for $5.00 to new subscribers. To our present subscribers we will supply the *Electrical World* one year for $2.50.

THE NATIONAL ELECTRIC LIGHT ASSOCIATION.

IF anything were needed to establish beyond doubt the usefulness of the National Electric Light Association and its periodical gatherings of technical and commercial workers in the field of electric illumination, it was afforded in the significance and scope of the work done at the Philadelphia meeting two weeks ago. Five meetings have now been held, each showing a gain in membership, and, still more important, an advance in the class of work undertaken, and in the manner of its execution. The association is doing much in furtherance of a rational and intelligent development of an industry that, like some boys, has reached adult proportions almost at a bound, and like the vigorous stripling, needs a good deal of shaping and discipline.

The tone of the convention throughout was frank, manly and earnest; frank and manly in general acknowledgement of the shortcomings of much of the work done in earlier stages of electric lighting, and of the room for improvement in present methods; and earnest in seeking and discussing means of improvement. Much as there is for congratulation in the present state of electric lighting as an art and industry, the association spent no time in felicitations, but promptly settled down to its work.

A full report of the proceedings is given in our present issue.

Among the important subjects acted upon by the convention, after the reading of able papers relating to them and discussion by the members, were the adoption of a standard wire gauge, the proper insulation of wires and apparatus, and patent office reforms. The first of these is a topic that has haunted the meetings of the association for a long time, everybody recognizing its importance. It was once acted upon, the convention adopting the new British gauge. This action of the association seems to have had no appreciable effect upon the practice of its members, the rather amusing result being brought out at the Philadelphia meeting that but one purchaser of wire had ordered by the adopted gauge. The gauge system proposed and tentatively adopted at Philadelphia is to be commended for its simplicity. It seems to cover all ordinary needs of electricians, and to offer a more readily comprehensible series of numbers than any existing gauge. Its introduction, if accomplished, will be a step towards a more general use of the metric system of measurement in this country.

The subject of insulation, treated at length in one able paper and touched upon largely in another, received well-merited attention at the hands of the convention. A thoroughly competent committee was appointed to investigate the subject and report at the August meeting. In our judgment no feature in the installation of electric light plants is so urgently in need of reform as that of

Digitized by Google

wiring. Mr. I. N. Miller called attention through the columns of the ELECTRICIAN AND ELECTRICAL ENGINEER, October, 1886, to the short-sighted policy of continuing the use of the so-called "underwriters wire" for out-door construction. Its defects and dangers, in many situations, have been clearly shown. The report of the insulation committee at the August meeting, followed by proper action by the association, may be expected to effect much needed reform in wiring, both in-doors and out.

Patent office reform is a topic of such wide interest, touching the welfare of so many people, that the action of the Electric Light Association in seeking needed legislation at the hands of Congress, should have hearty and wide-spread support.

Electric transmission of power received a large share of attention from the convention. The papers read upon this topic, and the ensuing discussions, were very significant of the general confidence in the early establishment of profitable business in the manufacture and introduction of electric motors.

The recent convention is generally regarded as the most successful yet held, and its work can hardly fail to redound to the best interests of all who are in any way connected with electric lighting, whether members of the association or not. The association is to be congratulated upon the re-election of President Morrison for another term. His common sense and energetic methods as a presiding officer contribute largely to the orderly and expeditious despatch of business. The August meeting will be looked forward to with much interest, not only for the results of action taken on important topics at Philadelphia, but for the pleasure found in the meeting of so large a number of earnest workers in a common field.

THE EDISON INCANDESCENT LAMP CASE IN ENGLAND.

ON the 31st of January the Court of Appeal gave judgment in the case of the Edison & Swan Electric Light Company *vs.* Woodhouse & Rawson, sustaining the decision given last summer by Mr. Justice Butt for the Edison & Swan Company. The appeal was heard by Lords Justices Cotton, Fry and Bowen. The three judges were divided in their opinion, Lord Justice Cotton dissenting from the judgment for plaintiff.

Those of our readers who have followed the litigation[1] will remember that in the original action the contention turned chiefly upon the construction of the following claim of one of Mr. Edison's patents: "The combination of a carbon filament within a receiver made entirely of glass, through which the leading wires pass, and from which receiver the air is exhausted for the purposes set forth." Inasmuch as the combination of an exhausted glass receiver, leading wires passing through it, and a fine carbon rod as an incandescent conductor, had been shown in lamps made and exhibited by Swan before the date of the Edison patent, the meaning of the word "filament" became the pivotal point of the case. In the original trial by Mr. Justice Butt the court held that a carbon filament was characterized by the qualities of flexibility, resiliency, and a high electrical resistance. On the appeal it was held by Lords Fry and Bowen that Mr. Edison's lamp differed from Swan's in a crucial point, "that the departure, though slight, had all the merits of a new invention. Mr. Edison used the filament instead of the rod for a definite purpose, and by the diminution of the sectional area made a physical law subserve the end he had in view. The smallness of size, therefore, was no casual matter, but was intended to bring about, and did bring about, a result which the rod could never produce, and so converted failure into success."

In expressing his dissent from the conclusions of his associates Lord Justice Cotton gave his opinion that an examination of the whole specification of Edison's patent did not justify a claim for a combination including carbon filaments generally. Finding the term "filament" to have had no recognized definition in respect to the subject-matter at the time of the invention, he disagrees with the assignment to it of the qualities of flexibility and resiliency, and holds that the only flexibility the inventor had in mind was flexibility of the original material.

The definition of a "filament" adopted by the majority of the Court of Appeal seems broader than that of the lower court; in fact it scarcely leaves room for any practicable carbon conductor in an incandescent lamp.

A further appeal, to the House of Lords, was indicated by remarks of counsel at the conclusion of the case.

1. See ELECTRICIAN AND ELECTRICAL ENGINEER, Vol. v., pp. 241-243.

WE publish elsewhere a translation (for which we are indebted to the columns of the *N. Y. Evening Post*) of an address by Dr. Werner Siemens, on "Science and the Labor Question," delivered at Berlin before the Congress of German Naturalists. Our readers are so well acquainted with Dr. Siemens' distinguished position as an investigator and inventor, particularly in the field of electricity, that they cannot fail to find interest in the conclusions of so trained a mind as his on a question so vital at this time as the labor problem.

As we surmised in our February number, Judge Van Hoesen's decision against the Subway Commission in their application to enjoin the New York Underground Telegraph Co. has encouraged the promoters of other underground plans to come forward again. The New York Electric Lines Co. has applied to the commission for approval of its plans, alleging that it had demand for over 1,000 miles of underground conductors. Judge Van Hoesen's decision precludes the establishment of a monopoly of underground conductors by the commission, confining their power to the approval of plans, and leaving the question of permits, that is, as to where and when conduits for electrical conductors may be laid, to the city authorities. The Subway Commission is, consequently, seeking further powers from the legislature.

DESIRING to give our readers the entire proceedings of the meeting of the Electric Light Association in one number, we have increased the size of the present issue by eight pages.

Digitized by Google

ARTICLES.

THE ECONOMY AND EFFICIENCY OF UNDERGROUND ELECTRICAL CONDUCTORS IN CITIES.

BY DAVID BROOKS.

When Mr. W. H. Preece, the chief electrician of the English post-office department, was in this country two years since, he stated that whenever the government could get as many as 15 electrical conductors into one route or channel, they found it both advantageous and economical to place them underground. Mr. Preece's experience with underground electrical conductors, as compared with overhead conductors, was almost entirely with the underground conductors insulated with gutta-percha.

The cost of a No. 18 British-gauge wire, insulated with gutta-percha, according to the government standard, is about $75.00 per mile. These conductors are drawn into cast-iron pipes, usually buried beneath the sidewalks at an average depth of two feet below the surface. This is the cost of the conductors themselves; but the expense of the trenching, the iron pipes, the drawing-in and splicing, brings the cost of these wires when laid to $100.00 or over per mile. Gutta-percha insulation is expensive.

By the use of oil, and a textile covering for the wire, instead of the gutta-percha insulation, we can lay three times as many of those conductors in this country for the same amount of money. In Europe we can lay at least five times as many conductors of the same gauge for the same expense.

DURABILITY.

The next question for consideration is the comparative durability of the different systems. Gutta-percha, or India rubber, like all vegetable or organic matter, undergoes disintegration and decay, but much depends upon the condition in which it is used. As it is used in England, it lasts from seven to ten years. It is exposed to the influence of damp and impure air. The French use the same kind of insulation, but they draw from five to seven conductors into a lead pipe, which is afterwards pressed tightly around the group of conductors, so as to exclude the air; and by that means they have made the insulation last thirty years; so I was informed in 1881 by the French electrical engineers; and for all I know those conductors are working yet. Within the last few years they have laid a large amount of those lead-covered cables, drawn into cast-iron pipes of larger diameter, and have wires working now underground from Paris to Marseilles and other cities of the Republic. Gutta-percha, when buried in the sea, and away from the influence of the air and the light, is said to be practically imperishable; but when suspended in the Paris sewers, and unprotected by the lead covering, it lasts but a short time.

The life of an insulator is dependent upon its durability. As a gutta-percha insulating material goes into decay, it does not become a conductor of itself, but it cracks and then admits moisture, and the moisture in the cracks becomes a conductor. Conductors insulated with India rubber made from old shoes have every appearance of presenting as high an insulation as those insulated with fresh Para rubber; but the life of the former is comparatively short as an insulator, because the material itself has lost its vitality.

There are different methods of preserving materials of all descriptions, but as a general thing almost any organic matter and the metals can be preserved if we protect them from the effects of light, heat, moisture and the air. As a rule, heat is not a factor in the decay of electrical insulating materials, for, as commonly used, they are not subjected to the influence of abnormally high temperatures.

I insulate underground wires with oil and a textile covering. All traces of moisture, air and light are excluded. There is nothing that can in any way affect the contents of the pipe. The textile covering is preserved by a hydrocarbon, the most stable of all materials, the same that has preserved the linen covering of the Egyptian mummies for thousands of years. The hydro-carbon preserves the inner surface of the pipe, the copper conductors and their covering. No change can take place in the condition of those materials, and, as a consequence, no change can take place in their insulating properties, as the insulation is entirely dependent upon the durability of the insulating materials; or, in other words, the durability is more a question in physics than an electrical question. If I were asked how long a glass insulator would last, I would say just as long as the glass remains whole and entire. I am often asked if the electrical current does not affect the oil. I say, no more than it affects the glass insulator on the poles. Such non-conductors as glass or oil, or any other equally good insulators, are unaffected by a current of electricity.

This much relates to the inner surface of the pipe and its contents. The outer surface of the iron pipe is protected from rust by being enclosed in a wooden box of sufficient dimensions to contain the iron pipe and a concrete covering composed of pitch and sand, which effectually prevents oxidation of the outside surface of the iron pipe. Under these conditions the system can be said to be indestructible except by mechanical means. So much for durability.

THE EASE AND FACILITY WITH WHICH THE SYSTEM IS LAID.

As many as 2,000 feet of trench have been dug, and the lengths of iron pipe screwed together, and the trench filled and repaved in one day. The inside of the pipe having been scoured and polished perfectly smooth, 2,000 feet of cable can easily be drawn in. The oil acts as a lubricator, enabling the cable to slip along easily and without friction. Nor is it necessary that the pipe be laid in a straight line. We go either above or below gas or water pipes, or to one side or the other of any obstruction we meet.

Three three-inch diameter pipes, with carrying capacity of 1,530 conductors, are laid in Calhoun place, Chicago. The wooden box containing these pipes has less than one square foot of section. A mile of cable could be drawn in, in one length, if it were desirable.

By having a short piece of the pipe bent so as to form a ninety-degree segment of a circle, the radius of the circle being two feet, street corners can be turned with ease, and cables have been drawn around two of such corners without producing a sensible or material increase of friction. By the use of the splice-boxes, or hand-holes, as many as 500 splices have been made by one person in a day. In New York, hand-holes were inserted every 45 feet, making it easy to bring out conductors and lead them into adjacent buildings; and they are so introduced, every portion of the wire from the building to the exchange being underground. Of those 800 conductors now in use for two years, not one has failed or cost one penny for maintenance or repairs. Another method is to bring out under the sidewalk, through the cellar to the rear of the building, as many conductors as will be needed in that block. They can be distributed from a short pole easily to any or every building in that block. A property owner would sooner grant this privilege than have poles standing in front of his building, as such poles must necessarily be high, and the snarl of wires radiating from that structure presents a very unsightly appearance.

FOR TELEPHONIC LINES.

The system is peculiarly adapted for telephonic purposes, being free from inductive disturbances and overhearing or eavesdropping. Those having interest in telephonic exchanges should consider the advisability of applying a portion of their earnings to the placing of the conductors underground. They should take into consideration the expense they are now under of having so large a force employed to hunt up and remove "trouble," and the vexatious

Digitized by Google

annoyances occasioned by the frequent interruptions of the overhead service. The outlay incurred in maintaining the force simply to remove "trouble" would pay an interest on a very large amount of capital. They should take into consideration that these overhead conductors are getting weak and brittle from exposure to the atmosphere of cities. The main telephone patent will expire in a little over six years. During this time, with judicious management their conductors can be buried, and the expense of this work paid out of the earnings of the company. A stockholder would part with his stock while it is paying 12 per cent. at a less price than he would were it paying six per cent., if he knew that when the time arrives for the patent to expire the conductors would be underground, and the expense of putting them there paid. Would a competing company easily raise the funds to put down a plant to compete against a company whose plant is already down and paid for? It is evident that the present companies would be as well protected under these circumstances from competition as they are now by the patent itself.

It is also well to bear in mind that since electric lighting came into use many of the telephonic exchanges and telegraph offices have been either destroyed or seriously damaged by fires occasioned by electric light conductors coming in contact with the telephone or telegraph conductors, and this danger will continue so long as these different electric conductors remain overhead. In New York, Brooklyn, Philadelphia, and other places, people have been killed by coming in contact with electric light conductors. Chicago is the only large city that has not suffered in this respect, and the reason is that all the electric light conductors are underground. Chicago is in advance of all other American cities in this underground business. Chicago has one-third more telephone subscribers than Philadelphia. The Bell Telephone Co. of Philadelphia employ 20 more men than the Chicago Telephone Co. to remove interruptions to their circuits. The Philadelphia Co. have no wires underground.

FOR TELEGRAPHIC LINES.

For telegraphic purposes few are aware of the advantages of having the wires placed underground in cities. The glass insulators in cities soon become coated with soot or carbon, and thousands of insulators are in use that will not show an insulating resistance of one megohm. There is as much loss of current over one insulator so situated, in rain and dampness, as there is in twenty miles of the line in the country, where the insulators are clean and affected by moisture only, which is comparatively free from impurities. When lines are worked upon the same set of poles with positive and negative currents, the interference from wire to wire by these currents short-circuiting into each other, commonly called cross-currents, is so great that some of the circuits have to be opened in order to enable the others to be worked. The telegraph officials in Chicago all speak of the great advantage derived in this respect from having their wires placed underground in that city.

FOR ELECTRIC LIGHTING WIRES.

For electric lighting, this system is peculiarly well adapted, both for arc and incandescent. By the use of the splice-boxes and hand-holes the conductors can be brought into the buildings for house-to-house purposes, or into the ordinary street lamp posts. The conductors for such purposes can be drawn in singly or a number of them in a group, as circumstances may require. Oil is the strongest insulation known, or least liable to be affected by currents of high potential and quantity combined.

UNDERGROUND CONDUITS.

Underground conduits first began to be invented in England about the year 1850, and from that time until 1860 many patents were taken out for different forms and materials. But a great many patents have been taken out in this country within the past ten years for that class of inventions. Neither in England nor in this country have the patentees been known as having much or any electrical experience. These various patented conduits are supposed to facilitate repairs by easy drawing in and out. From the nature of the case, conductors placed in these receptacles are continually in need of repairs. The atmosphere of the conduit is full of gases that will soon affect and destroy anything that is put in them. Some of the gases are heavier than the air, and their tendency is to collect and stay in the conduit. They act upon the metals, lead and iron like stagnant water, and no insulating covering of any kind can long withstand the effect. They are always damp, and the inner surface so wet that nothing is gained by having the material of the conduit itself made of a non-conducting substance.

It has been proposed to make these conduits of wood, but such a structure decays very rapidly, as was shown in the early experiments in England. A piece of wood buried in the ground, with the earth packed closely around it on all sides, lasts ten times as long as a wooden box containing damp and impure air. The decay begins on the inner surface of the box, that portion of the box coming in contact with the impure air, and no means have ever been devised to prevent it.

The writer has spent the last four months in Chicago, and has had abundant opportunity to examine the different systems there. That of the Dorsett has fewer conductors and in much shorter lengths than that laid for the Metropolitan Telephone Company, by the writer, in New York, two years ago, which has not cost one cent for repairs nor have any of the wires failed or deteriorated. But in Chicago, although the conductors have been in the ground a shorter length of time than have those I laid in New York, three men are continually employed, in Chicago, in repairing and removing faults or interruptions. The lead covering is often eaten through by rust.

They dare not go near the man-holes with a fire or soldering pot for fear of explosions. I had myself an experience. The Chicago Telephone Company had arranged a man-hole for bringing in the wires, opposite No. 91 Jackson street. When we sent a man into the man-hole with a lantern, to splice the wires, an explosion took place which set fire to the covering of the wires. In order to put out this fire, snow was shoveled on and by that process they got water into the pipe, which delayed our work two days.

A galvanized wire drawn into one of these conduits six months since, when pulled out showed no traces of zinc covering, it having been so affected by the atmosphere of the conduit.

Another objection to these conduits is their cost. I can lay alongside the conduit put down on Sixth avenue, New York, an equal number of conductors that can be got into that conduit, the conductors being of equal insulation and conductivity, for less money than the conduit costs, without wires in it. And I will guarantee the interruptions or failures from every cause to be less in the conductors I lay than those in the conduit, in the proportion of one to one hundred.

LEAD COVERED CABLES.

A lead pipe of sufficient diameter to contain one hundred conductors, costs as much per foot as an iron pipe containing five hundred conductors. If as many as two hundred conductors can be got into one route, it costs no more to place those conductors underground in an iron pipe, than to string them overground in lead pipes, and in the latter position they are liable to injury from fire, as almost every telephone exchange using lead covered cables can testify. If lead covered cables are placed underground they have to be imbedded in asphalt or pitch, to protect the lead covering, and in case of an accident happening to

Digitized by Google

the conductors it is extremely difficult to find and remedy the trouble.

The lead covering is seriously affected, as before stated, by the atmosphere of the conduit, and lead covered cables are extremely unwieldy to draw out of a conduit.

In our system, the cables can be easily drawn out of the iron pipes if occasion demands it. We have only had one such occasion and that was in Chicago, when it became desirable to substitute a 250-wire cable for one which had only 150 conductors in it.

The London *Electrician*, of May, 1886, contains the following experiments with oil as an insulator, by H. C. Frempt :—

"The oil used to insulate the underground wires running into the telephone exchange, at the corner of Broadway and Spring street, New York, is heavier than water. Take two cotton covered wires which have been boiled in that oil, draw them through glass tubes, twist the ends together, and place them in an ordinary glass battery jar. Fill the jar half full of oil, after which water may be carefully poured into the jar and it will remain above the oil. Attaching the poles of a battery to each of these wires, as shown above the glass tubes, no current will be observed as passing from one wire to the other.

"Take a piece of lead pipe containing a cable of cotton covered wires insulated with the same oil in a fluid condition, and cut a hole in the lead an eighth of an inch in diameter. The oil being viscous will ooze out slowly. Place the cable in a jar, and fill the jar with water, the oil will continue to flow till an equilibrium is established, but no current can be passed from one wire to the other or from either wire to the lead pipe. Now, if instead of oil we use in this experiment paraffine, pitch or rosin, the insulation immediately fails.

"Six years since there was a lead covered cable insulated with oil, armored and laid across the Delaware river. The cable contained 50 conductors, not one of which has failed. The cost of this cable of 50 conductors was no more than that of an ordinary gutta-percha insulated cable of five conductors. The gutta-percha insulated cables across the Delaware during this period have been continually subject to mishaps. Many of the conductors have been injured by lightning, although protected by lightning arresters. When the gutta-percha insulation is punctured by atmospheric electricity, it leaves a hole in the insulation in which water enters, by which the current passes to earth. The cable has to be underrun, the leak found and the hole sealed up, but a hole cannot be made in a liquid."

The splice boxes we use will hold two gallons of oil after the splices are covered with oil. When the splices are covered by the oil we can fill the remaining portion of the box with water without affecting the insulation of the conductors.

DYNAMIC ELECTRICITY.

BY CARL HERING.

(Continued from page 64.)

CHAPTER VI.—CALCULATION OF ARMATURES (CONCLUDED).

To illustrate the calculation of an armature by this method, assume that a cylindrical armature is to be designed for supplying the current for 150 lamps at 100 volts.

If the lamps require .65 ampere each, the current in the external circuit will have to be $.65 \times 150 = 97.5$ amperes. If the machine is to be shunt wound the current required for the field magnets may be about 3 per cent. of the total current. The armature having to supply both lamps and field will therefore have to generate 97.5 + 3 per cent. of 97.5 = about 100 amperes. As the machine will not be large, the proportion of energy lost in the armature may be taken as about 5 per cent., which will be about 5 volts. As the leads to the lamps will diminish the potential, the machine must generate a higher electromotive force in order that the lamps may have full 100 volts. For this loss in the leads 5 per cent. may be allowed, thus making the potential at the machine 105 volts, and as 5 per cent. was allowed for the loss in the armature itself, the total electromotive force to be generated in the armature must be about $105 + 5 = 110$ volts. The armature, therefore, must generate 100 amperes at 110 volts.

If the armature is to be well-proportioned and has not too many windings or too few commutator bars, an induction of about 1.2 volts per foot may be generated with well-proportioned field magnets and a velocity of the wire of about 40 feet per second. The 110 volts will therefore require $110 \div 1.2 = 92$ feet of active wire, which must at all times lie between one pole piece and the armature core, that is, must be embraced by one pole piece. As the wire which lies in the neutral part of the field is about 20 to 25 per cent. of the whole amount of wire on the cylindrical surface, the active part is about 80 to 75 per cent. of the whole. Assuming 75 per cent., the whole length of wire on one half of the cylindrical surface will be $92 \div .75 = 123$ feet. As described before, the whole armature wire is, by the nature of the winding, divided into two halves, which are in multiple arc, each half has to generate the full potential of the machine, but carries only half the current. The 123 feet determined as just described from the potential and the volts induced per foot, is therefore the length in one of these halves of the armature wire ; the whole length on the cylindrical surface will have to be twice this, or 246 feet.

The cross section of the wire should be determined from its allowable resistance, in order that the armature shall not absorb more than about 5 per cent. of the whole energy, but as this would be found to complicate the calculations, it is simpler to assume a certain cross section per ampere, and after completing the calculations, find whether this will give about the proper resistance, and if not, the proper cross section can then be readily determined. Assuming 520 square mils per ampere, which, for an armature with few layers will not cause it to heat too much, the cross section of the wire will be $520 \times 50 = 26{,}000$ square mils, as 50 amperes flow through each half of the armature, that is, through each coil or wire. This cross section is very nearly that of No. 5 B. & S. wire, the diameter of which is 182 mils. The insulation will increase the diameter about 15 mils, thus making the diameter of the covered wire 197 mils.

The length and diameter of the armature might be determined as described from its area, which can be calculated from the length and diameter of the wire on its cylindrical surface, but it will generally be found to be simpler to determine the diameter and length by trial, as follows : Assume that there are two layers on the armature, and 56 coils or commutator bars ; these two assumed proportions may afterwards be varied to find whether any others would be better. Try first three turns per coil ; this gives $3 \times 56 = 168$ turns, which, when multiplied by two, gives the total number of lengths or wires lying on the cylindrical surface of the armature, as each turn has two active lengths, one on each side of the armature. This again divided by two, as there are two layers, gives 168, the number of lengths or parallel wires in one layer ; multiplying this by the diameter of the covered wire in inches, namely, .197, gives 33.1 inches as the circumference of the inside layer, which is equivalent to a diameter of about $10\frac{1}{2}$ inches.

As there must be 246 feet of wire on the cylindrical surface, made up of 168 turns of two lengths each, there will be $168 \times 2 = 336$ parallel lengths, thus giving $246 \div 336 = .733$ feet, or 8.8 inches, as the length of the armature core and pole piece. This may be checked by calculating the area of the cylindrical portion of the armature, first,

Digitized by Google

from its diameter and length and then from the diameter of the covered wire, the number of parallel wires and their total length. Both should be the same; the area in this armature is 291 square inches.

As this diameter, 10½ inches, is very large for such a small machine, and quite large as compared to its length, 8.8 inches, it is probable that better proportions could be found. Repeating the calculations for two turns per coil and 56 commutator bars gives the following proportions: Diameter, 7 inches; length of core, 13.2 inches. These proportions appear to be much better, as the length is very nearly twice the diameter.

To find how these proportions will satisfy other conditions it is necessary to assume some speed. This must be based on the mechanical construction of the frame, bearings, and armature. If rigidly supported such an armature may be safely run at 1,200 revolutions. With this speed and a mean circumference of 23.2 inches the inductor velocity will be $23.2 + 12 + 1{,}200 + 60 = 38.8$ feet per second. This is not as high as would be desirable for the best effect and economy, but with such a small diameter a higher velocity cannot be obtained, as it is not advisable to increase the speed. This low inductor velocity indicates that a larger diameter might give better results.

From this inductor velocity and from the assumed induction in volts per foot, determine the required intensity of the field, in order to see that it is not too high. One foot of the wire moves 38.8 feet in one second, and therefore passes through or over an area of $38.8 \times 1 = 38.8$ square feet in one second; in doing so it generates 1.2 volts, as assumed at the outset. From this it follows that it must cut 120,000,000 lines of force in one second, and that these must pass through this area of 38.8 square feet; reducing to inches and dividing gives $120{,}000{,}000 \div (38.8 \times 144) = 21{,}500$ lines of force per square inch, as the required intensity of field, which will induce 1.2 volts per foot at a velocity of 38.8 feet per second. This intensity is not too high and can readily be generated by well-proportioned magnets. If it is found from a similar machine that a greater intensity of field may be obtained economically, the induction in volts per foot may be assumed proportionately higher. For instance, if it is found that 25,000 lines of force per square inch can be generated economically, then the induction may be assumed to be 1.4 volts per foot, as this is in the same proportion to 1.2 as 25,000 is to 21,500, or in other words $25{,}000 + 21{,}500 \times 1.2 = 1.4$. This would decrease the length of the armature in the same proportion, that is, instead of being 13.2 inches, it will be only $1.2 \times 13.2 + 1.4 = 11.3$ inches, showing the importance of having the field as intense as possible.

To find whether the resistance of the armature is too high it is necessary to know what the total length of the wire is, including that around the heads. From actual measurement it has been found that an armature whose length is about twice the diameter of core, the wire on the cylindrical or active surface is about 40 per cent of the whole length. The length of wire on the cylindrical surface has already been found to be 246 feet; as this is 40 per cent. of the whole, dividing it by .40 gives about 615 feet for the total length. As the resistance of No. 5 B. & S. wire is .32 ohms. per 1,000 feet, 615 feet will have .1968 ohms, and as the two halves of the whole length are in multiple arc, the resistance of the armature will be one-quarter of this, or .049 ohms. To see whether this resistance will absorb more than the 5 per cent. allowed for it, find how many watts are absorbed by the armature and divide it by the total amount of energy generated. That lost in the armature is equal to the square of the current multiplied by the resistance, or $100 \times 100 \times .049 = 490$ watts. The total amount of energy generated is 100 amperes $\times$ 110 volts $= 11{,}000$ watts. Dividing the first by the second gives about 4.5 per cent., when the armature is cold, but it will still be within the 5 per cent. when warm.

These calculations show that this armature, whose core is about 7 inches in diameter and 13¼ inches long, will answer all the conditions and will not be out of proportion. But in order to be assured that no other proportions will give better results, they should be varied, and the corresponding changes made, to see how it will alter the final proportions. For instance, fewer commutator bars, as for instance, 48, and say three turns per coil, might give better proportions; there will be $48 \times 3 = 144$ turns, as against 112 in the former case. This would evidently make the diameter larger and shorten the length. A larger diameter enables a greater inductor velocity to be obtained with the same speed of revolution, thus increasing the induction per foot, and thereby decreasing the length of wire. By completing the calculations and making the deductions as described, it can readily be determined which form would probably be the better.

As it is desirable to increase the diameter of the armature in order to get a greater velocity with the same number of revolutions, the following proportions suggest themselves: Assume 64 coils of two turns of No. 5 B. & S. wire. This gives 128 turns, and a diameter of eight inches. With the same strength of field the induction, 1.2 volts per foot, will therefore be increased in the proportion of 7 to 8, giving 1.4 volts per foot. This, for 110 volts, makes the length of the armature 10 inches. The total length of wire (assuming that only 38 per cent. is active on account of the shorter length) is 550 feet, and the resistance of the armature .044 ohms. This is less than before, showing that with these new proportions less wire will be required, there will be more coils, and as the resistance is less there will be less energy lost in the armature, and therefore less heating; as the heat radiating surface is about the same and the velocity greater, the heating will be reduced still more. The field is the same strength as before. If these new proportions do not affect unfavorably the construction and proportions of the frame, they are evidently better than those first determined.

If it is desired to have only one layer, the following proportions suggest themselves: 56 coils of two turns and but one layer will evidently make the diameter twice as large as before with two layers. This would probably make it too large. The number of coils of two turns must either be taken less, say 48, or it must be greater and have but one turn per coil. 72 coils is probably the largest number practical for such a small machine. The diameter of the wire may evidently be less in this case, as the heat is all generated in one layer. Assuming 72 coils, one turn per coil, and a No. 7 B. & S. wire, gives 7½ inches for the diameter of the armature, and a length of over 20 inches. This is undoubtedly too long to be run safely except with a very stiff shaft.

A No. 6 wire gives 8.15 inches for the diameter, and about 17 inches for the length, the induction being assumed to be 1.4, instead of 1.2, on account of the larger diameter or inductor velocity. The resistance of the armature will be about .049 ohms., which is about the same as that of the first form calculated, which had 56 coils of two turns and two layers. The total length of the wire is about 475 feet, as against 615 feet of larger wire in the other form, showing a great saving of wire.

Numerous other proportions could also be tried; those which are best will depend on the nature of the machine, and must be determined in each case by calculation and by the judgment of the designer.

Particular attention should be given to making the field as strong as possible, In general, an increase in the field increases the induction in the same proportion, and decreases the necessary length of the armature in about the same proportion. This enables the diameter of the wire to be diminished, which in turn makes the whole armature smaller and less expensive.

(*To be continued.*)

Digitized by Google

SCIENCE AND THE LABOR QUESTION.

AN ADDRESS BY DR. WERNER SIEMENS OF BERLIN.[1]

THOSE of us who are somewhat advanced in years need but to cast a brief retrospective glance at their youth to perceive the wide gap between then and now. We still remember the time when steamboats and steam carriages made their first feeble attempts at locomotion; when we listened with incredulous wonder to the strange fairy tale that light could reproduce for us in enduring pictures the objects it presents to our eyes; that the mysterious new force, electricity, could transmit messages with lightning speed across whole continents and the oceans which divide them; that this same agent could precipitate metals in a solid form from their solutions, and change night into the light of day! Who marvels now at these familiar things? Our children can barely imagine a civilized existence without them now when, as Reuleaux puts it, every civilized man has several iron servants working for him night and day; when, propelled by the tamed forces of nature, many millions of men are daily brought together who were but yesterday widely separated, and are supplied with immeasurable quantities of goods brought over continents and oceans, through mountains and over their crests and ravines, with a velocity formerly scarcely conceivable; when the world-encompassing telegraph no longer suffices for the needs of intercourse, but must give place to the transmission of oral messages by the telephone, over distances in comparison with which the natural range of the human voice appears as nothing; when the latest fruit of the union of science and technology, electro-mechanics in its rapid development, offers to mankind ever new and immeasurable fields for the investigation and utilization of the natural forces.

The man of science, who more than any other class of men is accustomed to contemplating the phenomena before him, to make deductions regarding the laws which govern them, is concerned not so much with the latest phases of development as with its causes and the laws conditioning these causes. We have before us an obvious law, that of the constant acceleration of the rate of growth of culture. Stages of development which in former ages required centuries for their consummation, and which, at the beginning of our times, still required decades, now complete themselves in years, and frequently present themselves at once in their completeness. This is the natural consequence, on the one hand, of a certain phase of our general progress, the present highly developed system of education, especially in Germany, by means of which the achievements of science, more particularly the scientific methods, have been brought, through the broad channels of the mechanical arts, within the sphere of the every-day activity of the people. On the other hand it is the result of the self-rejuvenating progress in the sciences and arts. And thus we see how in our day each new scientific conception rapidly flies through the whole civilized world, and is caught up by thousands, who seek to utilize it in the most varied fields of industry. It happens at times that apparently insignificant investigations, the surmounting of very slight obstacles which stood in the way of a correct appreciation of the relations of certain phenomena, form the starting point in an entirely unforseen and most important evolution. The accelerated progress thus induced will, therefore, if not arrested by man's own delusions, continue as long as science advances from one higher stage to another. The deeper the insight we obtain into the mysterious workings of nature's forces, the more we are convinced that we are still standing only in the vestibule of science; that an immeasurable field still lies before us, and that it is very questionable whether mankind will ever arrive at a full knowledge of nature. There is no reason for doubting the continuance of the constantly accelerated advance in the fields of science and the arts, unless man himself interposes obstacles to the progress of civilization. But even such hostile activity could effect but temporary suspensions in this advance, at most but a brief and circumscribed retrogression; for the light of science, becoming more and more diffused among all classes and strata of the people, drives back further and further the offspring of ancient darkness—superstition and prejudice—and robs them gradually of their power to arrest the course of development; and the nations who foster and promote science and industry acquire through them such a predominant strength that their subjection by uncivilized peoples and the return of an age of barbarism seem utterly impossible.

But if we are compelled to regard the present progress as incapable of being retarded or arrested, the goal, indeed, must remain hidden towards which this evolution tends. We can, however, determine, from the course of this development, in what way it must modify the hitherto existing conditions in the life of nations. For this purpose we have only to trace the changes already effected. We shall readily perceive that in the age of the reign of science man, by the increased utilization of nature's forces, will be relieved more and more of the severe physical toil which in the struggle for existence oppressed him, and in a great measure still oppresses him; that the labor imposed upon him is to be more and more of an intellectual character, as he will be called upon to guide the labor of his iron servants and not to perform severe labor himself. We perceive further that in the age of science the necessaries and luxuries of life will be obtainable at a much smaller outlay of human labor, so that with fewer hours of labor a much larger share of the produce of labor will fall to each individual. We shall find that the effect of scientific progress upon industrial and commercial activity facilitates more and more the exchange of products between different countries and climes, thus rendering man's life more enjoyable and securing him against the consequences of local scarcity of nature's productions. We see that by the application of scientific methods and mechanical skill to agriculture the soil is made to yield a more bountiful supply of food than heretofore, so that it can support a correspondingly denser population; it even appears probable that chemistry in conjunction with electricity will succeed in producing from the inexhaustible quantities of food-elements everywhere diffused the materials for man's sustenance, and thus render the number of those to be fed independent of the limits of the soil's productiveness.

This increasing facility in procuring the necessaries of life will enable man, by reducing the hours of labor, to devote his superfluous time to his mental improvement and intellectual pleasures; the increased knowledge of the conditions requisite for physical welfare arising from the knowledge of the workings of the forces of nature will contribute to the healthful development, bodily and intellectual, of future generations; the more perfect and more readily manufactured mechanical reproduction of artistic work will secure them admission to the humble cottage, and will bring within reach of all mankind, instead of only the privileged classes, that art which beautifies life and elevates our morals. If we but adhere to the conviction that the spreading light of science effectually combats debasing superstition and destructive fanaticism, we may continue with proud satisfaction in the work of establishing the reign of science, firmly trusting that it will lead mankind towards moral and mental conditions superior to those of the past and present.

This satisfaction, however, has of late been greatly diminished by the gloomy pessimism prevailing not only among the educated, but also among the masses, with regard to the influence exerted by the rapid development of science and the industrial arts on the life of the people,

1. Delivered at the last Congress of German Naturalists, at Berlin. [Translated from the German for the *N. Y. Evening Post*.]

Digitized by Google

as well as with regard to the ultimate outcome of this development.

The question is asked whether mankind is really being made better and happier by all these achievements of science and the industrial arts; whether, on the contrary, these achievements do not lead to the destruction of all our ideals and to coarse sensualism; whether they do not simply tend to aggravate the injustice in the distribution of the goods and joys of this world; whether the improvements in machinery and the consequent division of labor do not diminish the individual laborer's opportunities of independent work, and bring the laboring man into a more dependent position than he has hitherto held; whether, in fact, the supremacy of birth and the sword is not about to be superseded by the still more oppressive reign of inherited or acquired property.

It cannot be denied that this dark view has at the present day a certain plausibility. The rapid and irresistible advance in the useful arts must in its course act destructively on many branches of industry. The improved methods of production frequently have the effect of causing the supply to outrun the demand, and of diminishing the opportunities for labor, inasmuch as the former methods of production which gave employment to much larger numbers of hands are forced to give way in the struggle with the newly invented machinery. The same is the case with regard to the production of food. The cheapened means of transportation supply the older and more civilized countries with vast quantities of the products of distant and thinly peopled regions, whose virgin soil requires no artificial fertilizing, but whose paucity of cultivators has invited the co-operation of labor-saving machinery. The consequent fall in the prices of these products renders it impossible for our old methods of hand-labor cultivation to compete successfully. It is true that improved scientific processes, the more thorough replacement of the constituents taken from the soil, more rational modes of cultivation, afford the means for counteracting these disadvantages; but it is extremely difficult to replace antiquated and untenable conditions and methods with better ones. We, therefore, hear increasing complaints of the general fall in prices and the decreasd demand for labor; and as a means of lessening this evil it is proposed to shut one country against another and to impose forcible checks upon production. The advocates of these theories go so far as to deny the value to mankind of the advance in science and the useful arts, and would even appear to desire a return to the methods of former and, in their eyes, happier times. They, however, fail to reflect that the population of the world would first have to be brought back to the former figures. The number of happy shepherds and hunters which a country can support is very small, and, in estimating the comparative amount of happiness of any given period, the question of numbers must ever remain an important factor. It is a sad but, unfortunately, inevitable law in the life of society, that all transitions, even those to a better stage, are accompanied with suffering. It is, therefore, a humane endeavor to attempt to alleviate these sufferings of the present generation by judiciously guiding and even partially checking the new and irresistible revolution in the conditions of social existence; but it were a hopeless undertaking to arrest or perhaps to force back this current of development. It is bound to continue on the prescribed path, and the countries and peoples which least of all will be visited by its devastations, and be the first to enjoy the benefits of the age of science, will be those which contribute most towards promoting its pacific course. But that this current is urging mankind forward towards a better state, and in its further progress will heal the wounds it has made, is already made manifest in various ways in spite of the unavoidable evils entailed by a transition to new conditions of life.

Does not the mere fact of the general fall in the prices of the necessaries of life and other products of labor, combined with a simultaneous increased consumption and use of these commodities, afford a conclusive proof that the human labor required for their production is not only less arduous, but less in quantity? Does it not prove that the tendency of this progress will be to lessen the amount of time required for earning one's livelihood? Does not the fact that the fall in the price of commodities is not accompanied by a corresponding decrease in the rate of wages indicate an improvement in the lot of the workingmen as science progresses? Greater ease in procuring the necessaries of life is equivalent to an increase in wages. "Higher wages and shorter hours," this ever-growing cry of the so-called working classes is therefore but a manifest result of this progress. For inasmuch as, with the exception of times of financial panic and of transition periods, the quantity of commodities produced is no greater than what is consumed, it must be that the average hours of labor diminish with the increased rapidity and facility of production.

Another very general fact which presents itself is the decrease in the rate of the profits of capital, and to appreciate the importance of this circumstance we must remember that capital—that is, the savings of the wages of labor, as political economists correctly term it—is the gauge of all property. Capital, whether one's own or borrowed, enables a man to avail himself of the use of another man's labor. Were capital really abolished, as some fanatical and deluded people would have it, mankind would have to revert to an uncivilized state, as each individual would then have to rely upon the labor of his own hands for the satisfaction of his wants. But with the growth of capital, that is, the savings of labor, there is no corresponding increase in the demand for its use, inasmuch as the various kinds of apparatus employed for the creation of the products of labor are being constantly perfected, and made simpler and less costly. There is generally, therefore,—leaving out of account fluctuations of transition and violent disturbances—more capital being accumulated than can be profitably invested; or, in other words, there is an "overproduction" of capital, which must show itself, and in fact *does* show itself, in the constant decline in the rate of interest. The savings of former labor, capital, will therefore constantly decline in value as compared with the labor of to-day.

And as for the other, and apparently the weightier ground of complaint of the opponents of our present industrial revolution, which consists in the assertion that through this change the large majority of people are condemned to labor in large factories, and that through the constantly increased division of labor no field is left for the free labor of the individual—herein, too, the natural course of scientific development has its remedy. The necessity for extensive workshops for the cheap production of commodities is at present still due, to a great extent, to the imperfect development of the art of practical mechanics. Till now large machines have worked more cheaply than small ones, besides which the putting up of the latter in the dwellings of laboring men is still attended with great difficulties. But mechanical skill will certainly succeed in removing this impediment to a return to the system of independent, self-sustaining, domiciliary labor, and this will be accomplished by the introduction of cheap labor-saving machinery—the foundation of all industry—into the smaller workshops and the homes of the workingmen. Large numbers of great factories in the hands of rich capitalists, in which the "slaves of labor" eke out their miserable existence—it is not towards this that the age of science is tending, but towards a return to individual labor, or towards the introduction, where circumstances require it, of co-operative workshops conducted by associations of workingmen. Such a system of co-operation, however, can be established on a sound basis only through a more general diffusion of knowledge and culture, and through greater facilities for accumulating capital.

Digitized by Google

Equally unfounded is the complaint that the pursuit of the natural sciences and the unceasing efforts to utilize the forces of nature impel man in the direction of materialism, foster his conceit with regard to his knowledge and powers, and divert him from ideal aspirations.

The more deeply we penetrate into the harmonious workings of nature, governed by eternal, unalterable laws, and yet so completely shrouded from our understanding, the more we are filled with a sense of our humbleness, the narrower appears the range of our knowledge, the more eager are we to extract what we can from this inexhaustible reservoir of knowledge, and the more do we wonder at the all-controlling wisdom which pervades creation. And our admiration and awe excite in us that spirit of investigation, that devoted, pure, and unselfish love of science, which have particularly distinguished the German scholar, and which, we trust, will continue to mark our future generations.

And so let us not permit ourselves to be shaken in our conviction that our activity in investigating and inventing tends to advance man towards a higher stage of civilization, that it ennobles him and fills him with ideal aspirations, that the dawn of the age of science will alleviate his wants and sufferings, increase his enjoyment of life, and make him better, happier, and more contented with his lot. And if we cannot always see clearly before us the path which leads to a better state of things, we shall still adhere to our firm belief that the light of that truth after which we are striving cannot mislead man, and that the power with which it invests him cannot debase him, but must elevate him to a higher level of existence.

REFORMS IN THE PATENT SYSTEM.[1]

BY ARTHUR STEUART.

Mr. President and Gentlemen; Members of the National Electric Light Association:

At the last meeting of the association in Detroit, your committee reported several important reforms that were required in the patent office and in the administration of the patent system. And it was resolved that the committee prepare and present to this meeting bills to be presented to Congress which would provide for the reforms which were considered expedient.

A short review of those reforms may be in place here. The present law of the United States is substantially identical with that passed by Congress in 1836. For half a century we have been working under a law excellent in its general nature and intention, but sorely defective in many of its details.

During the year 1837 there were issued by the United States patent office 435 patents for inventions, while the salaries of the officers employed aggregated $6,850. This was the extent of the business which existed at the time of the passage of this act and for which it was intended to provide.

During the year 1886, there were issued by the patent office 25,619 patents, while the aggregate salaries of the persons employed has reached the sum of $650,000.

A simple comparison of these figures will show at a glance how utterly impossible it is, that a system established fifty years ago for the conduct of a business represented by an issue of 435 patents per annum, and which has been changed only by the addition of greater force as such became necessary, can be suitable for, or cope with, the questions that present themselves daily, in handling so large a mass of business as is now transacted by the office. An average of 448 patents issue every week; more than at the date of the passage of this law were issued in a whole year.

It is easy, therefore, to appreciate how difficulties have arisen that were not contemplated by the commission that prepared this law. Many things have changed in the interval, and while the office has run along with moderate smoothness, the time has come when the importance of the subject demands the attention of Congress. It only remains for those as deeply interested as we are, to knock long and loud at the doors of Congress until we succeed in bringing its attention to the subject.

The last report of the commissioner of patents, filed with Congress only two days ago, points out with definiteness the reforms that are needful.

LABORATORY.

The members of this association, as I mentioned at the Detroit meeting, are most deeply interested in the erection of a laboratory to be devoted in great measure to electrical experiments, for the purpose of testing appliances upon which patents are sought. Scarcely a member of this association who has been before the patent office with an application in this field has not felt the great demand for facilities of this character, and the commissioner urges its importance in his report.

EMPLOYÉS

The nature of the service to the public expected of examiners in the patent office requires that they should be men of such high attainments as to be able to give a thorough and intelligent examination to every invention presented for patent; in order that the rights of the public may be protected and also that a patentee may not be deluded, by being given a patent which, when it comes to be tested in the courts, is found to be worthless. To accomplish this result, it is necessary to pay the examiners salaries high enough to justify good men in making the service of the office a profession, to which they will devote themselves, and expect to make it their life work.

PATENT OFFICE COURT.

I may be pardoned for quoting the commissioner upon the most important subject for your consideration, he says:

"In my last annual report the following statement was made:" "At the present time, in addition to his administrative duties, the commissioner is called upon to hear all cases of appeal from the rejection of a patent by the examiners-in-chief, as well as finally to hear and determine all interference cases which may be appealed to him. Aside from the burden which this imposes upon the head of this office, there is a want of uniformity in the decisions which emanate from time to time from the respective commissioners of patents which ought to be corrected. I know of no better way to correct this evil than the establishment of some tribunal, to consist of at least three judges, whose tenure of office shall be fixed, and to whom all appeals shall lie. I have no doubt that the establishment of such a tribunal with such jurisdiction would not only make it possible for the commissioner to conduct a more successful administration of his office, but would secure to inventors and to the public a much more intelligent and uniform exposition of the law of patents and of the important questions which now of necessity must be determined so hastily.

"I again invite attention to this subject for the purpose of asserting that my experience of the year last past has not only confirmed me in views which I then expressed, but has made much more manifest to me the necessity for some legislation of this character. A court of sufficient dignity and strength ought to be created, and such tribunal might very properly be invested with final jurisdiction in all matters pertaining to the patentability of an alleged invention, as well as all matters of interference between litigating applicants. Such a court with such a jurisdiction would not only result in leaving the commissioner free to attend to the other pressing duties of his office, but

1. Read before the National Electric Light Association, Philadelphia, February 16th, 1887.

Digitized by Google

would inevitably relieve the federal courts of much of the litigation upon these subjects with which they are now burdened."

Here is the deliberate judgment of the man best fitted to judge of the needs of the office and the changes that would accomplish the results desired. A court such as that suggested by the commissioner would have the effect:

First, Of making the practice of the patent office uniform and logical; and those of you who have much business with the office know how great a gain that will be.

Second, It will merge in one tribunal that will never die or go out of office, the decision of all the questions now passed upon by the commissioner of patents, the examiner of interferences, and the board of examiners-in-chief, and, as a result, we may expect to get uniformity and a logical connection in its rulings upon subjects closely related, but now passed upon by several different officers.

Third, The decisions of such a court, if made co-equal with the circuit courts of the United States, would be *res adjudicata* whenever called up in them. Thus relieving those courts of the necessity of examining into questions of patentability when they arise in the trial of patent cases.

Fourth, It might also be well to give this court original jurisdiction, in cases for infringement of patents. Such a court would offer to all those who came before it, the inestimable advantage of a knowledge of, and interest in patents, which would insure to the patentee an intelligent hearing and a disposition to give him all that he was entitled to under his patent.

COMMISSION.

The next question to be considered is, how are these results to be accomplished. It is very difficult as we all know to persuade Congress that the measures that commend themselves to our minds as desirable will either meet with their approval or accomplish the results that others equally as intelligent and interested as ourselves may have in view. I think the commissioner of patents has suggested the proper course when he says in concluding his report:

"I feel so confident that changes and modifications too numerous to be dwelt upon in detail, or to be pointed in this report, of a substantial character which would materially effect the prosperity and usefulness of this entire office, are imperatively needed, that I cannot refrain from concluding by again urging upon congress the necessity of providing in some way, by commission or otherwise, for a complete and exhaustive revision of the entire legislation and probably of the rules which affect this office."

The surest road to the results we have in view would be the appointment of a commission by Congress to examine the whole patent system as it is at present, both the branch under which patents are granted, that is to say, the patent office, and that under which patents are litigated and rights under them determined by the courts; and to report to Congress an act, that will provide for such changes as this commission shall find necessary and desirable. Such a commission created by Congress and appointed by the President could give to the subject a most full and intelligent consideration, and when their report was formulated into an act it would, without doubt, be passed as they prepared it. We could feel that we had a law commensurate with the development of the subject and one that would successfully and satisfactorily cope with it.

I have prepared a bill to be presented to Congress which provides for the creation of such a commission, and it remains with you to adopt it here; and then urge it upon the attention of Congress with sufficient earnestness to secure its passage. The present Congress goes out of existence on the 4th of March, and before that time it must be pushed through both houses if it is to become a law. It is very desirable that this commission should be appointed at this session in order that its report may be submitted to the next Congress.

This bill will be filed at once, and each member of the association is earnestly requested to take the matter up and use all the power at his command to urge its passage upon the members of the Senate and House of Representatives.

PATENTS, TRADE-MARKS AND COPYRIGHTS.

A bill creating a commission to examine and report to Congress needful reforms in the patent system.

Whereas the patent, trade-mark and copyright laws of the United States are deemed to be in such a condition as to require revision, therefore:

Be it exacted by the Senate and House of Representatives of the United States in Congress assembled:

Sec. 1. That a commission be and the same is hereby created, to consist of three suitable persons to be appointed by the President of the United States, who shall hold office until a final report of this commission is submitted to and accepted by Congress. And who shall receive for their services a compensation of $5,000 each, per annum.

Sec. 2. It shall be the duty of this commission to examine thoroughly the present patent, trade-mark and copyright laws of the United States, and those of other countries, and their practical operation and effect in meeting the needs of the public and fulfilling the purposes for which they were created. To formulate a report to be submitted to the next Congress which shall set forth the results of this investigation, and their conclusions therefrom, with reference to changes in, or additions to, the present law, pertaining to patents, trade-marks and copyrights. This report shall also contain a draft of an act which will provide for the changes found necessary by the investigations of the commission.

Sec. 3. The commission is authorized to employ such clerical force as may be necessary for the proper conduct of its work, and to incur such other expenses for stationery, printing, etc., as may be found expedient.

Sec. 4. The salaries of the members of this commission as well as all expenses legitimately incident to its work, shall be paid from the surplus in the United States treasury to the credit of the patent office.

All expenditures by or for said commission, other than the salaries of the members shall, however, be under the control of, and authorized by, the Secretary of the Interior.

INCANDESCENT LIGHTS ON HIGH-TENSION CIRCUITS.[1]

BY JOSEPH WETZLER.

THE demand which the public makes for electric lighting must be satisfied, and although the arc satisfies it to a considerable extent, experience has shown that the incandescent light is in equal demand and that arc light stations are called upon to furnish it. The service is found to be equally as profitable as arc lighting; and hence the introduction, by way of necessity, of incandescent lamps on arc circuits has become quite general.

The object aimed at is to reduce the quantity of copper required for the distribution of the current to incandescent lamps. This is accomplished by increasing the electromotive force employed on the circuit, and reducing correspondingly the total current required.

It is proposed in this paper to give a resumé of the various ways in which this may be carried out, so that those interested in electric lighting may become acquainted with what has already been done and suggested. It will be necessary at the outset to state that it would be injudicious to assume that any one system is given as a perfect solution of the problem, for the conditions of service vary

1. Read before the National Electric Light Association, Philadelphia, February 17th, 1887.

Digitized by Google

so much in each case that where one system would be a success, another might prove a failure. In other words, we must look at the question in a broad light and consider that all of these systems have their field of application, which depends alone on local circumstances.

Very early in the history of electric lighting Mr. Edward Weston proposed the placing of incandescent lamps in multiple series, by means of which they could be connected to a high potential dynamo. He was followed by others who adopted the plan of inserting the incandescent lamps in arc circuits. The usual method of doing this, as you all know, consists in employing a "distributor," which, generally speaking, is a device for connecting incandescent lamps in multiple series on an arc circuit, and which contains mechanism for preventing an increase of current when a lamp breaks. These devices, of which there are several forms in use, among them those of Brush, Slattery, Little-McDonald, etc., need not be more particularly described here, as they are already known to all of you. They are of undoubted value, but they cannot be said wholly to satisfy the general wish of electric light men for maintaining incandescent lamps on high-tension circuits.

The question then arose, How can the field of incandescent lighting be broadened so that the benefits of small-wire circuits can be taken advantage of, and so that the electric light can in the fullest sense take the place of gas as an illuminating agent?

This question can be answered in a variety of ways, each of which may be correct. I will take up the discussion by presenting the most simple case, and that is, the running of incandescent lamps in plain series, similar to the disposition of arc lamps. This has been successfully accomplished in one way, in what is known as the Edison municipal system. If we examine into the conditions under which this system can be operated, it appears that we have here a field which is well worth looking into, and as it has not, to my knowledge, been brought prominently forward, I propose to give a few details of what can be accomplished by it. One of the main objects for which the system was devised is the displacing of the street gas lamps. As such it evidently comprises in itself the use of very long circuits, and their economical operation is a first consideration. The dynamos employed for this service have an E. M. F. of 1,200 volts, which allows for any drop in potential that may be desirable up to 17 per cent. in the wire, while a pressure of 1,000 volts is left to be expended in the lamps. The largest type of dynamo constructed for this system can feed 12 distinct circuits, upon each of which about 65 lamps of 15 c. p. can be placed, or 800 lamps in all. Each of these circuits carries a current of only 4 amperes, so that only a very small wire is required to convey the current, a number being generally employed.

With twelve circuits at our disposal from a single dynamo, it is evident that a wide range of distribution is possible, and the small cost of conductors is a decided advantage. Then, again, the system permits of placing lamps of greatly varying candle-power anywhere in the same circuit, ranging as high as 50 c. p. Thus each circuit is capable of feeding lamps aggregating 1,000 c. p., whatever be the illumination of the individual lamps employed. This gives a basis of calculation upon which definite results can be quickly predicated. The system, such as it has been outlined here, is in operation in various cities, among them Portland, Me., where 500 lamps are so connected; Lawrence, Mass., with 550, and Denver, Col., with 530. While it is principally designed for street lighting, the system is also adapted to interior lighting where the load is a constant one, as in stores which remain lighted up to a fixed hour in the evening.

A system similar to the one described has recently been put in operation by Mr. Chas. Heisler, in St. Louis, and also in Vincennes, Ind.

A recent interesting modification of the method of running incandescent lamps in series has also been brought out by Mr. Alex. Bernstein in England. His method consists in utilizing the full arc current of about 10 amperes as ordinarily employed and running incandescent lamps of low resistance, which require only six volts E. M. F. Thus with an arc dynamo developing 2,000 volts, over 360 lamps could be placed in series. Several installations on this plan have recently been started in England, and with reported good success.

A still more recent method of similar design is that of Prof. Elihu Thomson. This also consists in doing away with distributors and placing incandescent lamps directly in series in the same circuit with arc lamps. These lamps take the full current, and lamps of different candle-power can be inserted in the same circuit. In all these systems, provision must evidently be made, and now is, for preventing the interruption of a circuit when a lamp is extinguished.

There are still other methods of intercalating incandescents on high potential circuits. One of these is by means of induction through what are called secondary generators. As I understand that another member has prepared a paper dealing with this highly important branch I shall leave it with this mere mention and draw your attention to a second method by which induction can be utilized for running incandescent lamps directly on arc circuits. This is the method devised by Mr. Ph. Diehl, which has lately been made public. The incandescent lamps in this system are arranged in two branches, between arc lamps, and a current interrupter is so arranged that the current is alternately broken in one set of lamps and simultaneously sent through the primaries of the other lamps. Thus the main current remains continuous and unbroken, while the rapid interruptions in the incandescent branches induce the current required to bring the filaments to incandescence. Lamps of any desired candle-power can thus be easily inserted in the circuit.

This outline of the principal systems will give electric light men some idea of the various methods by which the incandescent light can be brought into service without the necessity of employing large conductors.

Thus far, I have only alluded to methods where the connection between dynamo and lamp is a direct one, but there are still other methods which come under the title of this paper, but which have hardly yet forced themselves upon the attention of those present. I refer to the use of storage batteries as an adjunct to an electric light station. You will probably all remember that when the storage battery was first brought out prominently, it was said that each house could now be provided with its quota of batteries, which, being charged from a central station during the day time, could furnish current for the lamps in the hours of darkness. During the past few years, while the storage battery has been in a state of slow evolution, this idea has almost fallen into oblivion; but I think the time has arrived when the problem should again be attacked in earnest and be brought to a practical solution. The reliability of the storage battery is now beyond cavil, and it only remains to work out the details. Let us glance for a moment at the method employed here and see what it involves. In the first place, your arc light dynamos, which now lie idle on an average sixteen hours out of the twenty-four, could be run practically during the whole twenty-four hours, charging the batteries in the circuit in the houses during the day time and doing their regular lighting as usual at night. Thus no additional machinery or boilers will be required. Considering the installation in each house, all that would be required would be a battery of accumulators which, for economy of current, should have an E. M. F. of about 60 volts. This would be reached by 30 storage cells, which can be placed on a shelf in the cellar. Such cells, which can now be obtained in the open market, would be capable of furnishing current for 15 lamps, and one charging of 12 hours would, with

Digitized by Google

the ordinary number of hours of lighting, last for 3 days, provided all of the 15 lamps were lighted at the same time. Where the number of lamps is less, the time required for the battery to become discharged would be still further prolonged. A dynamo of 3,000 volts, E. M. F., and having a current of 20 amperes for your purposes, or two arc dynamos, giving each a 10-ampere current, coupled in parallel, would be able to furnish current for 50 houses, each absorbing 60 volts, E. M. F. The conductor required for the purpose need not be greater than a No. 4 B. & S. wire. To make the system perfect, suitable automatic switches can be arranged in each house, which would cut out the battery when the latter is fully charged and throw it into circuit again when discharged. In this manner it is probable that considerably more than 50 houses could be supplied from a 3,000-volt circuit, as not all of the batteries would be exhausted or charging at the same time. Here, then, is one method by which, without a very greatly increased expense, the earning capacity of electric plants can be increased, and I believe the time has come when you should seriously consider the working of the field here presented.

But there is still another way in which the storage battery can be made to do good service for incandescent lighting from arc light stations. As stated before, the dynamos at the station are idle for a large fraction of the day. Now, nothing would be more simple than to charge the storage cells in series at a station during the daytime, and then couple them in quantity, so that they could be connected to incandescent circuits radiating from the central station, which would thus be virtually a secondary battery station. It is a well-established fact that incandescent lamps are not used on an average more than four hours per day, the current required in incandescent circuits during the remaining twenty hours not reaching 15 per cent. of the maximum called for during lighting hours. Let us again take for example a station having only three 40-light dynamos of about 2,000 volts and 10 amperes each. By coupling these in parallel we would obtain a current of 2,000 volts E. M. F., and 30 amperes. This current from 6 A. M. to 4 P. M., or ten hours, could be used to charge a battery of 1,000 storage cells, delivering to each cell 30 amperes for 10 hours; that is, 300 ampere hours. Now, at four o'clock these 1,000 cells which have during the charging been connected in series are changed about so as to be connected in 20 parallel rows of 50 cells each, thus giving an E. M. F. of 100 volts, suitable for incandescent lamps. Each of these twenty rows having a capacity of 300 ampere-hours the entire series of 20 are capable of delivering 6,000 ampere-hours at a potential of 100 volts. Now, if we suppose that with the resistance of the circuit each lamp requires 1 ampere it follows that 6,000 incandescent lamps could be lighted for one hour, or 1,500 for four hours, the maximum average lighting duration established by actual experience. Thus, by the mere addition of 1,000 cells to an arc light station with only three 40-light machines, we could, without the addition of any machinery whatever, by the mere adjunct of the storage battery, furnish current for 1,500 incandescent lamps, and maintain them with the utmost degree of steadiness.

What has just been stated with regard to arc light stations is equally true of incandescent light stations. Instead of having the majority of machines idle during 18 hours out of the twenty-four, a few machines might be run continuously, charging storage batteries which would furnish the supply of current needed during the busy hours.

Such a station, the first of its kind in the world, I believe, is now in course of construction at Haverford, not far from this city of Philadelphia, and I am convinced that the results which will be obtained will justify courageous wisdom on the part of its projectors.

I believe I have shown that those principally interested in arc lighting have a number of paths open to them by which they can with profit add the incandescent light, or for that matter electric motors, to their business. I need only remind them that the street lighting, which most of them are engaged in at present, embraces only 5 per cent. of the total lighting done in this country, and that of the remaining 95 per cent., according to our present knowledge, only 5 per cent. more can be touched by the arc light. The remaining 90 per cent. must be done by incandescent lighting.

POPULAR PREJUDICE AGAINST ELECTRIC LIGHT WIRES.[1]

BY E. R. WEEKS.

THE long line of martyrs to newly discovered facts gives ample proof of the tendency of man to adhere to the old, and fear and reject the new. Even in this nineteenth century of progress, when invention presses on invention, discovery on discovery, the latest and one of the greatest discoveries feels the impulse of doubt and opposition and popular prejudice, the old summation of ignorance cries out against electric lighting.

It is true that the superiority of the illuminating properties of electricity has brought about its use to a remarkable extent, yet the prejudice against the methods of general distribution bids fair not only to hinder its widespread adoption, but to result in legislation, that may retard our industry, or burden it so heavily that the small beginnings upon which we must depend for the general diffusion of electric light, will be prevented by the great cost of construction and maintenance. It behooves us then to inquire into the causes of this prejudice and to discover its remedy.

It must be admitted that there is an element of danger connected with our business. But the same is true of all modern devices that have materially assisted progress. Now that we fully comprehend the power of steam, we can only wonder that its applications met with no more opposition than they did. But every one thought he knew what steam was, while electricity is an unknown, invisible agent, which the popular mind holds in awe, nearly akin to that which led the ancients to propitiate the God of thunder. The element of danger is, therefore, magnified to vast proportions, and this result combined with an utter ignorance of the nature and laws of electricity makes a strong case against a force in regard to which the wisest have much to learn.

To realize the feeling of the public toward this industry, consider our chances as dependent before a jury in an action for damages to life, limb or property. Were the jury chosen even from the average of intelligence instead of from the usual stratum, the chances of a verdict for defendant, would be but one in ten thousand, though all the expert testimony were clearly against the plaintiff.

Again, this element of danger has been increased by careless workmanship and negligent maintenance. Unavoidable ignorance of best methods of managing machinery, running lines, etc., has led to much unsatisfactory service and some loss of life and property, though in an insignificant proportion, when compared with that which attended the early history of gas and steam. But these causes can no longer be pleaded as an ample excuse, for although no system of electric lighting has attained perfection, the safest and most efficient methods of construction are well known, and the poor workmanship seen in the lines in many of our cities, the temporizing resorts and money-saving devices in an industry that needs perfection in all its parts, prove that complaints against us are not wholly without foundation.

Much of the popular prejudice against electric lighting apparatus is the outgrowth of the opposition that this

1. Read before the National Electric Light Association, Philadelphia, February 15th, 1887.

Digitized by Google

branch of electric industry has met with from gas interests, and in quarters from which we had reason to expect a most kindly welcome and considerate treatment. It is true that light wires conveying currents of high tension, or enormous quantity, are not very desirable neighbors for either telephone or telegraph lines, but the commodity they carry is just as valuable to commerce and to the convenience of the public, and has the same right to existence and to accommodation, as have the "great conversers" of the present age. It might seem strange that we have met with such opposition and unkind treatment from our cousins in these kindred industries. Yet from time to time, we find newspaper articles and reportorial interviews with telegraph and telephone men, the reliability and animus of which may be judged by the following extract from an interview with a prominent telephone manager, not many thousand miles from Detroit. "How about electric lights?" "Well that is a different thing. The arc circuit in which the most brilliant lights are placed is a constant danger when the lights are burning. There is present in the wire itself sufficient electricity to kill any man. You don't have to wait for lightning to come along. The lightning is there. Many a lamp trimmer rues the day when he first went into electricity, and the chance for paralysis of the man who handles electric lights are a thousand to one in the case of a man who handles telephones. Yes, there have been a number of fatal cases in that line of business. I knew one man who used to trim the lights on top of the 150 foot mast in Union Square, New York. One day he was trimming the lamps and some people who were watching him saw him topple over and fall to the ground. It was not a mismove, it was a let go. Well the company said he had heart disease, or a fit, but it was just electricity that killed him. I think though that the greatest danger, is in case of a fire. I have known a number of firemen to be knocked down and quite severely hurt at fires by the electricity from the electric light wires. The firemen may be holding the brass nozzle of a hose, and the water may be striking a wire through which a strong current is passing. Presently the wire breaks, or some one turns off the electricity, and the current will run down the stream of water and pass through the body of the firemen, and perhaps seriously injure him. These conditions are not unusual at a fire, and are impossible for a fireman to guard against. It is really far more important that electric light wires should be put underground than either telegraph or telephone wires. It would interfere far less with the former business, than with either of the latter."

Such a tissue of mis-statements and rank ignorance seems to those who know the truth to need no refutation. But the masses have no technical knowledge by which to judge of the utter falsity and absurdity of the whole thing, and, therefore, the result in forming public opinion is highly prejudicial to our interests; for people are willing to have their fears fed by those who will do it.

If these are some of the chief causes that have led to the popular prejudice against electric light lines the remedy is plain. Let there be better construction in putting up poles and in running wires. Let there be a rigorous exclusion of all makeshift devices. Let the entrances to buildings be made in the neatest, most inconspicuous, and above all safest way. Let grounds and crosses be rendered impossible, except under circumstances beyond human control. Maintenance should be looked after with such vigilance that the evils attendant upon the necessary crudity of much of our apparatus be reduced to a minimum. A thorough system of inspection should be instituted in order to quickly detect and correct trouble; complaints from any quarter should be patiently heard, and the causes removed as soon as possible; in other words, by the best construction, by ready, constant and obliging attention, we should seek to render the unavoidable imperfections of service and immaturity of our apparatus less apparent.

One of the most weighty causes of prejudice would be done away with, if a more fraternal spirit among the various electric industries would be created. All should work together for the common good. Each adaptation of electricity has its special needs, which every other is bound to respect, and nothing is gained by attempts to exclude or hamper any one of them. Each is necessary for the present, and each is here to stay. Each has its own weakness which can neither be hidden or cured by attacks on the others.

The members of this association may accomplish much in one direction at least, and that by working for the enlightenment of the general public as to the agent we employ. Only through such enlightenment can we hope for justice, either in the courts or at the bar of public opinion. As people more fully understand the character and usefulness of this force, its channels of operation how perfectly it may be controlled, and the many advantages of its adaptations for lighting, most of the prejudice against it will disappear.

The telegraph and telephone industries have been fully explained to the public in popular treatises; but we have been somewhat remiss in this respect. The promoters of electric lighting have been so occupied in introducing their apparatus that they have confined their writings to technical journals, and have left the instruction of the public to such teachers as the one above quoted.

"FOR HIGH INSULATION."[1]

BY C. C. HASKINS.

In the early days of some new enterprise there is ever a swarming of investigators, as to a newly discovered mine of precious metals or gems, and indecent haste is made to arrive first at the goal. We Americans, perhaps no more than people of the old world, are peculiarly marked with this disposition to thus rush in where angels fear to tread.

In this headlong race some fall early in the action, some faint by the wayside; but a few, masters of the situation, profiting by experience bought, join earnest industry with business capacity, and win by hard knocks and combative endeavor.

In those early days, however, there are errors of commission or omission, having for their object an economy which in the end often becomes an aggravation, if not a positive pecuniary loss.

The electric lighting enterprise has shown to the civilized world that it has firmly planted roots, and has come to stay. It has passed the preliminary skirmishing incidental to the period of infancy; it has made for itself an honorable record as an earnest, brave combatant, and won its way through the lines of its original enemy—the illuminating gas phalanx—which now meekly holds out its hand to proffer the fraternal grip of partnership; and it numbers among its friends leaders in the army of underwriters—a force which, lacking knowledge, either positive or negative, on the subject, would accept no invitations to the christening of the new-born demon of light.

What has wrought this change? Certainly, a dynamic current, having sufficient energy to maintain an electric lamp circuit of any extent, has the same power for mischief to person or property which it had in those baby days of electric lighting, and there are more persons who "can take the current of a twenty-five light dynamo" than there were five or six years ago, for there are more employed in the business. The loud and boisterous element has largely disappeared. There is in its place a cooler determination to find out and apply the why; there is more research; more applications of safeguards to dangerous or weak points. These have supplanted and stamped out the fuss

1. Read before the National Electric Light Association, Philadelphia, February 15th, 1887.

Digitized by Google

and feathers that originally dimmed and befogged the glow and warmth of the grand young enterprise.

The electric light men who are the representatives of the many systems known in this association, while they have, up to the present time, fought the good fight earnestly and successfully, have still to continue the noble work, to bring their enterprise up to the level of callings of equal magnitude in other branches of industry.

While commending and applauding the excellent results thus far attained, I trust I may be permitted to hint at a few possible opportunities which seem to me to point at substantial achievements in the future.

I would modestly, but very positively, suggest that a cheap installation—such a one as we can all call to mind, in some other fellow's territory—an installation which at the commencement called for a very modest amount of money; one in which drawer knobs usurped the place of the glass insulator, put on right end up, out of doors; in which what Miller, of Cincinnati, calls "undertaker's wire," is strung on telephone knobs along the face of buildings; where, to re-enforce the insulation through elevator shafts, under sidewalk crossings, through steam-damp rooms, etc., a wrapping of tape is rubbed down with a lick and a stick, like a postage stamp, to become, as soon as the organic oil has evaporated, of about as much value for the purposes of insulation as a molasses-covered rag; where a dozen similarly ineffectual subterfuges were used by everybody—the present company excepted—that kind of cheap installations are in general the most expensive in the long run, if they manage to live at all.

Better work in the outset is far more satisfactory to patience as well as to pocket, to dynamo man as well as to director.

The use of the wire referred to for outside purposes is a loud-crying evil. In this particular direction but little progress has been made; this relic of the barbarous days of electric lighting still lives.

We, in Chicago, have been accused of having cried wolf when there was no wolf, and afterward, having undergone a change of heart, changed the war cry to something else. Now the facts in the case, I may say in passing, are just this: There was a time when the electric light wires in Chicago were overhead, crossing alleys and streets to some extent, and the cry of wolf was raised. Now the wires, save where they crawl along the fronts of buildings, are out of the way—in conduits, in cables under sidewalks away from probable contact. Now the hue and cry is against other wires on account of their mechanical interference with the firemen. These are all on their way below ground, and when they are down there will be neither "wolf" nor "hue and cry" more.

In a recent paper, by Mr. I. N. Miller, this matter of using inside wire for outside purposes is quite thoroughly canvassed; and I wish to call particular attention to a few facts relative to the insulation of the underwriter's wire when moistened. Mr. Miller says:

"Careful experiments made by immersing 12 inches of this wire in a 6x8 jar filled with water, the ends extending above the jar so that the water would come in contact with the covering only, shows the following insulating properties:

	Ohms.
After 1 minute's time, resistance,	115,000
" 3 " " "	4,170
" 5 " " "	1,770
" 1 hour's " "	280

"One hundred cells of battery were used in making the tests, one pole of the battery being connected with the water in the jar, the other pole with the copper conductor."

I do not believe there is any representative of a well-known electric light system present who considers an insulation of 280 ohms resistance sufficient to protect any unfortunate who grounds the line of a fair-sized arc light circuit through his body at any point in the line; or would like such a wire to rest upon his porch roof, or be on terms of particular intimacy with his telephone apparatus.

Yet there are hundreds of just such lines throughout this country, and they now and then get in their work; and there was a time when the makers professed to, and others did believe—on account of its name principally—that underwriter's wire was perfectly and positively safe from every standpoint of person and property. It was cheap, too, but perhaps that had nothing to do with it.

I am aware that the argument may be used, that if it was so extremely dangerous we should hear from it oftener. My answer to that thought is that if we hear of it at all, as a mischief-maker, we will be doing ourselves, as well as the general public, a great good by so arranging and controlling this matter that we shall never hear from it in that capacity again.

We all thoroughly understand that it is the second ground which does the mischief; but in a well-soaked line of underwriter's wire the second, if not the fortieth leak, is on, and I have seen a case, not in my own bailiwick, where the deductions from rental accounts because of this wet-rag insulation, in one month, would have put kerite wire at every exposed spot, and prevented shutting down for every heavy rain.

Now, the general public when it gets hold of a sensation desires to make the most of it. The newspaper men are no exception. One of the most violent articles on the danger of electric lights I have read was issued by an establishment which was lighted without and within by electricity. The editor wrote it, the printer set it up, the proof-reader read it, and the pressman worked it, all under the electric light; but there was a chance for a sensation; it was out of season for mother-in-law jokes, and the public had to have something. It was a ground hog case. It was a small affair, but it went by telegraph all over the country—an example of what electricity can do.

It knocked a man down. It exasperated or inspired—I never knew which—a newspaper man to write up the story, which was colored as blue as the bluest arc you ever saw, by electric light, and step by step it advanced until the associated press sent it flying, scattering it from ocean to ocean, and from Maine to the Gulf of Mexico by electric telegraph.

This sort of thing is what I think we can, and I feel that we should, prevent. In these comparatively young years of this calling, facts or fancies, either, are trumpeted aloud because they are a new form of sensation; and in some instances these statements have taken such firm hold of communities that the authorities have almost to be dogged into sanctioning electric lights within their corporation limits.

It is better to have the good will of a dog than his enmity; and when other circumstances combine for the interest of the party who is trying to pacify the animal, there may be a double incentive for amicable overtures.

The use of some good form of waterproof wire when it is necessary to run a line along the front of a building to an outside lamp, will add greatly to the general insulation of the line. It may be joined to the inferior wire—which is first-class, on porcelain knobs, for inside work—at a point inside the building where the storm cannot reach. It will cost a little more, but this expenditure will be amply repaid through the maintenance account, and assist in keeping the rental refunding account at a minimum.

There is a deal of very comfortable satisfaction to the electrical department on watch, in the feeling that a rain storm is working no mischief to the plant; that Barkeep's lamps will run till midnight, despite the rain, or that an alarm of fire in the neighborhood has nothing of common origin with the singing dynamo and the little glowing emeralds peeping from under the brushes.

There is comforting assurance in the fact that the danger in handling a live lamp is at a minimum because of good insulation; and there is a growing confidence on the part

Digitized by Google

of the public which reads in its morning paper that somebody, somewhere, was killed by a dynamo current, or that the cause of a conflagration was traced to a wire in some other distant country or town, when that public can point to its own home installations, and say we have never known of an accident here.

The responsible public always demands results. It cares nothing for theories, it must have cold, hard-tempered, crystallized facts, when it comes to matters of business. When these facts are satisfactory the genial public smiles. The smiles of the public are worth money to the electric light fraternity. On the contrary its frowns are irritating and discouraging, while its mutterings and growls are exasperating, if not expensive.

In the old days of fable, somewhere in Wales, if I remember right, there was a race of giants, who, on account of their immense size and strength, had pretty much everything their own way; and to judge of the pictures preserved to us, a pretty rough way it must have been, and at times quite unpleasant to the little people. They rode over, knocked down and dragged out everything in their road, their constant salutation being "get out of the way, or I'll eat you!" As might have been anticipated the race was finally extirpated by the little people, who overpowered them as the Lilliputians did Gulliver. Only one was permitted to live on account of his gentle and harmless disposition, who was recorded as the last and wisest of the giants of Wales.

Electrically speaking, there are little people and there are electrical giants. When one of these giants goes wandering along the street, dodging in at a saloon here or an all-night lodging house there, the little people cringe and shrink as far away from him as possible, but they gnash their teeth and say hard things of the monster. Now and again the huge, hungry creature lets go and drops down to take a bite out of a telephone line, or devours a telegraph switch-board, and shouts "keep out of my way, or I'll eat you."

The telephone affair is a trivial matter intrinsically, and the loss of a switch-board is but a small affair in dollars and cents. But suppose there was a costly edifice consumed or a precious human life sacrificed to the insatiate hunger of the giant. Or suppose, for illustration, the giant were to make a meal of one complete circuit of fire alarm boxes, and deprive an entire district of means by which to call assistance in case of fire. Similar cases have occurred. What then? Would it not have been better otherwise? The public has an excellent memory, and facts like these are stumbling-blocks to progress.

Fortune, in the general distribution of her favors, has seldom made such dispositions of real property as to leave the electric light man entirely independent of the outside public. The unfortunate constructor who is doing his level best to "get there" is often necessitated to ask favors of some purse-proud individual whose life has not unfrequently been made miserable, if not an absolute burden, by the wily telegraph and telephone men, whose ingenuity in whipping the devil round a stump, and getting over, under, through and into a piece of tabooed property, is proverbial. Popular prejudice is against the individual who wears climbers, carries a coil of wire on his arm, or wears a gaudy chaplet of huge porcelain beads.

The quantity of current which is unsafe or the pressure which is dangerous is nothing whatever to the average property owner or the unscientific citizen. Once fixed in his belief that a dynamo current passing his house on a wire ten feet above his roof is dangerous, he feels that he knows what he knows, as well as you can teach him, and yet, on the contrary, if he has been fairly dealt with, and experience has shown that the properly insulated wire has made the current which crosses his premises safe—why, the fellow generally averages up about the same as the rest of mankind.

And there is the insurance man too. He is human, as well; and while in his untutored state he may do a deal of floundering and bucking against electricity in the abstract, experience has shown that he is as ready to receive information, when honestly tendered, as anyone.

Since the last meeting of this association I had the pleasure of preparing and reading a paper before the Western Association of Underwriters, on the subject of electric lighting. While there was a remarkable lack of knowledge on the subject, I did not find the gentlemen unreasonable, but on the contrary, earnest and curious, and anxious to know something of a force of which they had but the most vague ideas; and the thought then occurred to me, that if there were a fraternal exchange of opinion between the two interests, a good fellowship created between the insurance and the electric light people, much good would be the result of the alliance. The two parties are a couple of good fellows who should be well acquainted with each other.

If, as was suggested at the January meeting of the Electrical Club in New York, each of us could capture an insurance man and bring him in to discuss this matter with us—if we could educate them in this matter—I feel certain a strong point would be gained. A timid child will enter and go peacefully to sleep, in a lonely room, if a light is burning, where no persuasion would induce it to venture in the dark; and the insurance agent, no less than the general public, is nervously groping in the dark whenever he discusses the subject of electric illumination.

There is still another incentive, which appeals to the sensitive electric light man's feelings, and argues potently in favor of better average insulation.

You have probably all noticed the different action of the lamps on a central plant circuit, when in the one instance the rag-wrapped wire was well soaked by summer rains, and in another instance the air was crisp and dry in the hard frozen season. The coal-pile, too, feels the effect, and so does the patron.

With the mercury skirmishing for a few hours in the neighborhood of zero, what was nearly no insulation becomes a matter of megohms. All electric wires show this result, from the pigmy telephone and short-distance lines up to the fire-alarm and long telegraph systems. In such weather, during the cold snap in January, direct telegraphing was done, not as an experiment, but as business, between Toronto and Victoria, British Columbia. The frozen conditions of affairs generally along the line conserves to the wire itself all or nearly all the electrical energy which the generator furnishes for the use of the electro-magnets or the chemical solution of the receiving apparatus.

Now, if the tension, the electrical pressure of a telegraph battery, is capable of forcing itself away from a conductor of far more than ample capacity, to escape down a pole to ground during a rain, what are the possibilities to a dynamo current so many times more energetic both as to pressure and quantity, when its route to earth is across half an inch or so of the knob, through a soaked thread wrapping to the wet wood, iron, brick or stone, to which it is made fast at intervals of only a few feet.

A still further reason for high insulation is well illustrated by a recent occurrence in Chicago.

A church edifice there was discovered on fire at about 3 o'clock in the morning. The conflagration was a stubborn one, which, when finally conquered, was explained by the fact of its having been burning some hours, and the fire had worked its way upward pretty much all over the house through the partitions, and the evidence was plain that it occurred immediately under the floor in the basement.

Immediately over the main entrance there was a single arc light on a central plant. The wires to this ran parallel the entire length of the building on the joists within three feet of the hole in the floor.

The fire broke out at three in the morning, and showed that it might have been burning since before the plant was shut down at midnight. No other cause being found, the

Digitized by Google

electric light wires were at once accused of the mischief, and it was only by showing the fact that while the heat had melted off the lead and boiled out the filling of the cable, the wires were all in place on the knobs, unbroken—somewhat disfigured, but still in the ring.

Now, had that fire burned through the floor, three feet farther to the north, no theory would have held water for an instant which denied the assertion made against the electric current.

The cause of the fire is to-day unknown, but electricity was discharged, and declared innocent by the court of inquiry.

I have endeavored to show from several standpoints the necessity, as I contend, for high insulation, and I shall bring this paper to a close by offering for your consideration a suggestion which, while I am aware it is not entirely new, has one feature which I have not met with elsewhere. It is simply this: Provide your superintendent, engineer, inspector, or the proper employé, by whatever name you may call him, with proper reliable instruments for measuring the insulation resistance of your lines. In saying proper instruments, I trust no one will for a moment believe that I mean a magneto. A combination of galvanometer with twenty cells of silver chloride battery in one box and a Wheatstone bridge in another will give you an outfit with which any measuring can be done, from small fractions of an ohm up to over a megohm.

With the apparatus let there be a record book, ruled for date, number of circuit, number of ohms, and a large space for remarks.

Let the measurements be made at least twice a week, or, still better, oftener, and the record made, whether up to or below the standard. In the latter case when the trouble is found, full particulars should be entered in the remarks column.

Now, if a fire occurs where there is any possibility of an electric wire having contributed to the trouble, that dumb witness, if it has been properly kept, will contribute more hard facts to ward off an unjust accusation than could be shown by your president and the entire board of directors in one long, weary day.

ELECTRIC MOTORS.[1]

F. J. SPRAGUE.

I FEEL that I owe you an apology, as I see that it is stated on the programme that I am to read a paper on the transmission of power. The duties, however, which have devolved upon me during the past two or three weeks have been of such a character and demanded so much of my time that it has been simply impossible for me to write a word on the subject in question. What I have to say will therefore be entirely extemporaneous; and if there is a lack of logical sequence in my statements, or I omit any important points, I trust you will excuse me. I may also add that I am almost physically unable to say anything at all, and it is only because I promised Mr. Morrison and some others that I would address you that I have consented to make any remarks.

The time has come for us to look upon the distribution of power in a light altogether different from that in which it was viewed three years or even one year ago. We have heard about electric motors, and we have talked about the possibilities of the transmission of power ever since Pacinotti ran his first motor. But motors were run primarily with batteries, and it is only recently that they have been operated in connection with central stations.

They have been made of small sizes and treated as toys, and more batteries and motors have been invented than there have been made variations in the steam engine, but we have never reached any position from which we could show a commercial return from the use of electric motors until the last year or two.

The distribution of power by electricity, so long looked upon as a visionary and to-be-hoped-for attainment, is now an accomplished fact. It is in its infancy, but it has a future probably second to no other enterprise in the commercial world. It is not necessary here to give a scientific explanation of the operation of a motor. I will try to briefly show that electricity will fill the field in a far more complete and satisfactory manner than, but in very much the same general way as, does the distribution of power from a central station by means of gas, steam, water or compressed air. The use of any of these elements for this purpose is an engineering problem. To be successfully solved, not alone scientifically, but commercially, every part of such system must be in thorough accord with every other part. It is not enough that there shall be a good dynamo, or that there shall be a good motor, but that the dynamos and motors shall be built for certain specific electromotive forces definitely related to each other, and that the conductors should be put in for the distribution of given amounts of energy to the motors, under given losses, and the motors should have an efficiency that is not visionary or sought after, but which is just as well known as the characteristics of any part of the system.

In considering this question, however, we are confronted with grave responsibilities and many difficulties, and those who assume to advise the general public cannot be too careful of their utterances. We have to consider the state of the art and the people's knowledge on the subject. We have to even contend against the ignorance of people in charge of central stations, and we have to contend against a much worse element, the ignorance of the general public concerning electricity. With steam we do not have to deal with this difficulty at all. Trained and experienced engineers can be secured without number. They can be hired by the week or month to care for an engine, and since all engines are based upon nearly the same principles and are practically alike in their operation, no difficulty is experienced in getting good men to care for a five, twenty-five, fifty or a hundred horse-power engine. This is not the case with electric motors. We are obliged to depend upon the central station managers and those whom they especially train.

The practical questions which arise are: Who are to exploit this business? Who are to be actively interested in the extension of this system for the transmission of power?

There are two representative industries already in the field. The first to come was the arc light; then the incandescent light; and now, finally, comes the transmission of power for industrial purposes. There have, in consequence of the order of development of these three different methods of using electricity generated at a central station, arisen three different interests, more or less antagonistic to each other, but which ought to be working in harmony.

No one can doubt that if, ten years ago, the arc light in its present stage of development, the incandescent light in its present perfection, and the electric motor as efficient as it is to-day, were all three at the same time presented to capitalists as commercial investments, all three would have been taken up by the same men on a broad, comprehensive plan, and each would have held its own particular field and would have been pushed with the same energy and success that they have been individually; and that instead of there being more or less of a rivalry between these three branches of industry, they would have been operated under one control, one general expense and one profit.

An illustration of their natural unity of interest is afforded by the action of the various companies representing these different branches. Arc light companies are operating incandescent light; incandescent light companies are running arc circuits; both are beginning to use motors;

1. Address delivered before the National Electric Light Association, Philadelphia, February 16th, 1887.

Digitized by Google

and I suppose some of the future motor companies may be rash enough to supply lights.

But since we have to deal with existing conditions and vested rights and privileges, let us briefly consider the various organizations which can be instrumental in developing this new field of work, and the methods by which they may be successful. As being in the position to actively take up this work, I may mention, first, arc light companies.

A very large number of existing companies have already secured franchises which it would be difficult for other companies to obtain. Some of these companies are to-day just barely meeting their running expenses, because they are supplying power for lights for only a fraction of the day or night in close competition with the gas interests, and perhaps with other electric light companies. As the demand for light varies, of course, at different times of the year, the receipts vary above and below the operating expenses. All through the day, till perhaps five in the afternoon, these stations lie idle. Such companies have their poles erected, their lines run, and certain franchises in their possession, and it would be an easy matter for these same companies to run lines for the distribution of power on the same poles as carry their arc light circuits. The wiring for this purpose would be very simple. In some cases the poles would have to be re-enforced; in others it would not be so. For running these lines to supply power alone, constant potentials as high as 400 volts could be used with perfect safety, and this would very much reduce the size of the wire.

As regards incandescent light stations, many of these run only in the daytime, and do not begin their lighting until late in the afternoon. The bulk of their lighting terminates long before midnight. Other of these stations run during the day because they find the necessity of supplying a few lights in the daytime to get certain contracts for night work, but almost invariably this day work is at a loss. These companies already have their lines run to supply power on constant potential circuits, some overhead and others underground. Since the power would begin in the morning and continue for a general average till the latter part of the afternoon, and then begin to fall off, and the light at the same time begin to come on, such a station, if worked up to its full capacity, ought to have an almost continuous load from morning until late at night; the load consisting first almost entirely of power, then of light and power combined, and finally, almost entirely of light.

The gas engine, although it has made great strides in England, does not stand in high favor to-day in the United States. A gas engine will not work up to the capacity at which it is sold and at which it is nominally rated. It will fall off anywhere from 25 to 50 per cent. below this. Its motion is necessarily irregular and uncertain, because during a large part of its rotation it is dependent upon the inertia of the fly wheel. Such machines are necessarily more costly than electric motors of the same capacity, such cost being about double. They are noisy, they cause a great deal of heat, and they are uncertain. Their advance in England was made before electric motors were as practical as they are to-day, and where gas is sold at a very much lower rate than it will be possible to get it for in the United States for many years to come. The electric motor, then, can easily compete against the gas engine when put side by side, both in initial cost and expense of operation. It is likewise more compact and has an excess capacity, a quality that is never claimed for a gas engine. Gas works have among their residual products coke, which is of very little value. By putting in good generators, running wires for the supply of power alone, and putting the generators and dynamos in charge of the men who are already employed at the gas works, they could produce their power and sell it at a very advantageous price. Their office rent, officials' salaries and attendance would be reduced to a minimum.

Special stations should be put in good manufacturing and industrial districts, and preparations made to supply any demand for power from a half horse-power up to one hundred or more horse-power. There is no possible question that, when a large number of motors are supplied from one district, even when dealing with large powers, electricity can successfully compete against steam.

Double circuits can be used, small powers being supplied at 100 volts and large ones at 400. Such stations should be built to get the steam power at the lowest cost, and hence should have the best engine and the best method of fuel consumption. The district covered will depend upon the location of the station. If this is central, two or four square miles can be easily covered.

I will now consider the different classes of circuits on which motors may be used.

First. Arc light, or constant current circuits, in which the current supplied to the motor is kept constant at a certain number of amperes, ranging from six to nineteen amperes in different systems. The electromotive force at the terminals of the motor varies with the load.

Second. Constant potential, or incandescent light circuits, in which the difference of potential at the terminals of the machines is kept practically constant while the current varies with the load.

Third. Circuits in which the current and the potential both vary, as is the case where there is an appreciable drop or fall of potential on connecting lines somewhat removed from the source of power of a constant potential system.

I am now operating on all classes of these circuits, but since, because of the small ampere capacity of the current on arc light circuits, any large power must require a great difference of potential at the motor terminals, and variations of power will cause sudden and great changes of potential, the arc light circuits have principally been used in conjunction with arc lights for transmission of small powers only, or for constant work.

In considering the transmission of power as an industry, that is, in a broad and comprehensive way, and not as an adjunct to some system of lighting, I may here state that practical and theoretical considerations make it imperative that the constant potential method of distribution is the only safe and feasible one. Since I make this statement, it is incumbent upon me to explain the reasons. The only existing constant current circuits are used primarily for the operation of arc lights. At present, as I have said, these range in capacity from nineteen to six amperes. The unit of light which is required for general purposes necessitates an expenditure of about half a horse-power of electrical energy. A greater expenditure would be extravagant. In order to keep the size of the conductors as small as possible and to allow long extended circuits, the tendency is to reduce the amperes to the smallest number.

The conditions of an arc light probably will not allow this to go below about six amperes; the more ordinary unit is about nine and a half. The commercial conditions unquestionably will not permit, in the future, of a much higher ampere capacity, because the size of the wire varies as the square of the current used. Now with a nine and a half ampere current, a motor to develop one horse-power—supposing it to have an efficiency of eighty per cent.—must have supplied to its terminals 933 watts of electrical energy. In other words, there would be at the terminals of the machine an electromotive force of about 98 volts for each horse-power developed. Suppose, now, we want to transmit one hundred horse-power; it would then be necessary (if the motor be of the same efficiency) to supply to the motor 93.250 watts of electrical energy; and, if it were on this 9½ ampere circuit, we would have an electromotive force of over 9,800 volts.

Now, in practice, arc light circuits vary from, say, 1,000

Digitized by Google

to 2,500 volts. On a 1,000 volt circuit you could recover about ten horse-power; on a 2,500-volt circuit about twenty-five horse-power. In other words, existing arc light machines, if devoted entirely to the transmission of power, are limited to the actual development, on even the largest machines in ordinary use, of twenty-five horse-power; and, if used in combination with light, there would not be available on any particular circuit over a small fraction of this. Now if you are going to consider motors as toys, if you are going to deal with the transmission of the tenth of a horse-power or one-half horse-power, or a one horse-power unit, and are willing to have the element of danger as well enter into these small transmissions, then you can work with an arc light circuit; but if you are going to transmit units of five, ten, fifteen, twenty, or twenty-five horse-power, you cannot deal with the arc-light circuit; it is utterly impossible.

In Boston we have recently put upon certain lines nearly two hundred horse-power. Suppose this were supplied on 9½ ampere circuits. No less than eight circuits of 2,500 volts each would be required, and probably more, because with units as high as fifteen horse-power and this division of circuits, the law of general average could come into play in but a very limited way.

These eight 2,500-volt circuits represent the capacity of a 460 arc lamp station, and to deliver the power not a single lamp could be used at the same time. Does any one really suppose that by this method of working, leaving out for the present all question of danger and unreliability, the same results could be obtained as are in fact to-day? The constant current method of distributing power is the limited and unnatural method; the constant potential, the comprehensive and natural method. This is a fact entirely independent of the question of relative electrical potentials, because on the constant potential circuit we can work at 100, 500, 1,000 or 2,000 volts if we please.

In Boston we at present transmit up to 4,800 feet on a 200-volt circuit.

When dealing with the question of power alone, and with an area of, say, four square miles, the station being near the centre, I would prefer to work with 400 volts. Remember then, that power transmitted means the transference of a given number of watts of energy. It is expressed by two products, quantity and pressure. If one is increased, the other may be reduced. If small conductors are to be used, then it is essential that small currents shall be used, and of necessity high electromotive forces, even when operating on a constant potential circuit.

When dealing with short distances and small powers it is better to use low potentials; but when dealing with large powers and long distances it is absolutely necessary to use high potentials, because the commercial conditions will allow only a certain proportionate investment in copper. There are certain laws to which it is well to call your attention, as they may serve to make more clear some of the questions which come to you.

First, with any given work done by a motor, loss of power on the lines, electromotive force at the terminals of the motor, and distribution, the weight of copper varies as the square of the distance. That is, if the distance is doubled with these given conditions four times the weight of copper will be required.

Second, with the same conditions, the weight will vary inversely as the square of the electromotive force used at the motor. That is, if using double the electromotive force at the motor, it is necessary to use only one-quarter of the weight of wire. Another way of expressing this is, that if the weight of copper is fixed, then, with any given amount of power transmitted and a given loss in distribution, the distance over which the power can be transmitted can be increased in directly the same ratio as is the electromotive force; for example, if a thousand pounds of copper is required to transmit a given amount of power with a given loss, and it is desired to double the distance with the same weight of copper, then the electromotive force must be doubled. Again, with the same cross-section of conductor, the distance over which a given amount of power can be transmitted will vary as the square of the electromotive force. Another way of expressing these laws is by means of a formula which I have been using for a long time, and which you will find of service in determining the size of wire to use in the transmission of power. Let

l = distance between the generating and receiving stations in feet.

n = number of effective horse-power to be delivered on the motor shaft.

E = electromotive force at the terminals of the motor.

v = number of volts fall of potential on the line.

$E + v$ being, of course, the electromotive force at the beginning of the line.

K = efficiency of the motor.

$C\,M$ = circular mils of conductor.

Then, allowing 10.5 ohms as the resistance of a mil-foot of commercial copper, and considering a complete metallic circuit, we have

$$C\,M = \frac{15{,}666 \times n \times l}{E \times v \times K}$$

Let me give you a practical illustration. Suppose we have a motor the efficiency of which is 90 per cent. at 400 volts electromotive force and when developing 10 h. p., and that we wish to transmit this 10 h. p. 5,000 feet from a station, and elect to lose about nine per cent. on the line.

Our initial electromotive force will be 440 volts, and we would have

$$C\,M = \frac{15{,}666 \times 10 \times 5{,}000}{400 \times 40 \times .90};\ \text{or,}$$

$C\,M = 54{,}396$, which is about equal to a No. 4 B. W. G.

This electromotive force of 400 volts is a very good standard. Without serious inconvenience we can go to 600. For long distance special transmission it is necessary to go up to 3,000 or 4,000. If the arc light current be used, all motor handlers take the risk of high potentials.

As I have already said, you have to contend against the ignorance of people using motors. It has been said that you can put a motor on an arc light circuit, and it will take care of itself; that the people at the central station will take care of it. This is true to a certain extent and to an equal extent it is not. I came very near having a serious accident in New York. I was working on a Brush circuit of 2,500 volts. I took hold of the motor and began to adjust the brushes, at first unintentionally and finally intentionally; but it so happened that I was not in a position to be grounded. Had I been so and there had been a ground on the line some distance away, there would have been an end to my motor experiments. A similar end would have resulted if I had lifted the brushes. We put in an automatic cut-out to avoid that danger. We found that a man blocked the cut-out so that it would not work. If that motor and cut-out had any trouble with it (it was on one of the most important Brush circuits in New York, one fifteen miles long) it would have caused the blocking of the entire line.

With a constant potential circuit this kind of trouble is practically impossible. If there are grounds anywhere on the line, or any defects in the motors, they will cut themselves out of circuit automatically, and the rest of the circuit is not affected.

Digitized by Google

ELECTRIC MOTORS.[1]

BY WM. BAXTER, JR.

THE rapidity with which the electric motor has reached to its present state of perfection is without a parallel in the history of mechanical devices by which energy is derived from the forces of nature. The fact that the energy of gravitation could be utilized through the agency of water from streams descending to a lower level was known to mankind in days pre-historic, and as far back as the days of Archimedes, water wheels more or less perfect were used extensively for industrial purposes; yet, it was not until modern times, when the turbine wheels of the present day were invented, that gravitation motors were brought to a state of perfection. Even to-day, with all the refinements of modern engineering, it is considered a very superior achievement, that a turbine wheel, constructed on the most approved principle, will utilize 90 per cent. of the power in the current that passes through it.

The steam engine (which most people suppose was born in the fertile brain of Jas. Watt) was known and used by the ancient Greeks, although in a very crude form. They utilized the power of steam to impart motion to toys and other unimportant purposes. Through all the centuries that intervened up to about 300 years ago, improvements were unimportant; from that time onward, however, the energy of heat through the agency of steam began to be used extensively for industrial purposes. Steam pumping engines of large proportions were made, and operated in various parts of England, for draining mines; but, as they were very imperfect and costly in operation, they did not displace animal power to any very great extent. Improvements were made, however, from time to time, until Watt, by a masterstroke of his genius, made the improvements which gave to the steam engine a position in the industrial ranks and placed it far *beyond* the competition of animal power.

The steam engine, however, to-day looked upon by most people as a perfect piece of mechanism, is not and can never be as perfect as the electric motor. Not because our knowledge of the laws which govern the action of a steam engine is less than that of the laws which govern the action of an electric motor, but because there is a principle in nature, "the law of latent heat," which renders it impossible for a steam engine to utilize more than a small proportion of the energy of heat contained in steam or the vapor of any other liquid.

From what I have just said, it will be observed that the human race had been familiar with water wheels for at least 4,000 years, and that the steam engine was known in its crude form over 2,000 years ago. The electric motor cannot be said to have been known even in its crudest form, much earlier than 50 years ago: yet, in the short period of its existence it has developed to such an extent that to-day it is as perfect as the best water wheel, *and far more perfect* than a steam engine ever can be. Furthermore, the laws of electrical science, in so far as they relate to the action of an electric motor, are so thoroughly understood that it is possible to obtain as perfect results to-day as are within the limits of possibility. And should the human race inhabit this globe to the end of time, it will never be possible to make a much more perfect motor than can be made to-day.

This statement may appear broad, but I venture to make it and will explain why it is made. To those familiar with the laws of physics, there is no such thing as creating energy. All that can be done is to convert one form of energy into another; a given amount of energy in one form can never be made to give more than an equivalent amount of energy in any other form. To illustrate my meaning more clearly, I will say: An amount of heat energy, the equivalent to 1 h. p. cannot possibly be made to develop more than 1 h. p. of mechanical energy or work, even with a theoretically *perfect* steam engine. And 1 h. p. of electrical energy cannot be made to give more than 1 h. p. of work even with a theoretically perfect motor. It is no more possible to create energy than to create matter. You may take a pound of putty and form it into any shape you please, but it is still one pound. You may roll it into a ball or draw it out into a string, it is the pound of putty still. So is it with energy. You may transform it from heat into electricity, from electricity into molecular or mass motion, and from motion back into heat, but you neither decrease nor increase it. There are many men, however, who do not understand this fact and believe that there is no limit to the power that can be obtained from a given electric current, and that therefore some one may at some future time discover some way by which 100 h. p. or more may be developed from the same amount of current that is now used to develop 1 h. p. Any such result is beyond the limits of possibility or reason.

To-day we develop 9 h. p. from an electrical energy of 10 h. p.; one-tenth of the whole is all that is lost. Therefore, all that the future workers in the field can do is to recover a part of this one-tenth. *They cannot recover all*, because there *must* necessarily be some loss. Therefore, I believe I am within bounds in stating that it will never be possible to make a much more perfect motor than is made to-day.

A theoretically perfect motor would be one that converted all the electric energy passing through it into mechanical energy available outside of the machine. Practically such a result is impossible, for the reason that no mechanism can be made to run without friction, and no electric conductor, no matter how large, can be made without resistance; therefore, there must necessarily be a loss in friction and electrical resistance. This loss can be reduced a great deal, even beyond the point to which it is reduced in the practical motors of to-day. The only thing to limit the point to which these losses can be reduced is the question of expense in construction. A motor can be made to convert nine-tenths of the energy of the electrical current into power without going to any unreasonable expense; but it is doubtful whether the increased cost of construction of conductors necessary to attain a higher result would be compensated for by the additional gain in efficiency.

Now, it may be asked whether the electric motor—inasmuch as it is nearly as perfect as man can make it—has reached a point where it is susceptible of every application which can be made of it at any time. To this, I would answer that it has not; that the applicability of the motor depends upon the cost of generating the current with which it is driven. The cheapest way in which an electric current can be generated at the present day is by the use of large dynamo machines driven by large steam engines of the most approved construction; and inasmuch as the best dynamos must lose something in converting the power of the steam engine into electric energy, and the motor also lose something in converting the electric energy of the current into dynamic energy, the power obtained by the motor must necessarily cost more than that developed by the original engine which generates the current. Nevertheless, as large steam engines are much more economical in their action than small ones and the cost of attendance is less in proportion to their size, it is possible to utilize the current generated by them to develop power in small quantities at a cost low enough to compete with small engines. Up to just what point the cost of power so developed will be cheaper than steam cannot be stated with any degree of accuracy, because it depends upon a great many circumstances. In one locality a motor up to 25 or 30, or perhaps 40 h. p., may be able to compete with a steam engine, whereas in some

1. Read before the National Electric Light Association, Philadelphia, February 16th, 1887.

Digitized by Google

other locality under other conditions, a 5 h. p. motor may barely be able to do it.

If we were to take into consideration the absolute cost of generating power only, then electric motors of a great deal higher power would be able to compete with steam engines. But the electric current will be generated by electric light companies who conduct their business for a profit, and therefore the price which the user of the motors will have to pay for the electric energy he consumes will not be the net cost of developing that energy, but will be that net cost increased by the profit which the electric light company desires to make. But notwithstanding this increased cost, occasioned by the desire of the electric light companies to make a profit, electric motors can compete successfully with steam in point of economy, and when convenience is considered, can compete not only with steam but with any other method now employed for obtaining power in small quantities.

In all large cities and towns people using steam engines rent surplus power to manufacturers in the same building or neighborhood. In a great many cities there are establishments whose business is to run large engines for the purpose of letting out their power in small lots, the price of which is generally low enough to compete with small steam engines, and therefore these prices, as well as the amount of power let in individual cases, can be taken as a guide by electric lighting companies desiring to do business in the same district. If these concerns can make money at the prices fixed, electric lighting companies can make more, for this reason : the loss in transmitting power through shafting and belts is greater than the loss in transmitting it through electric conductors.

In determining the cost of power, to regard simply the amount which is paid for it, is not the only consideration, as many other expenses enter into the question. For instance, the rate of insurance on a building in which the work is of a hazardous nature will be very materially affected by the introduction of a steam boiler. This increase in the rate of insurance must be added to the cost of running a steam engine, in comparing it with the cost of an electric motor to do the same work. Again, in populous cities and in busy portions thereof space is of great value, and the difference in the amount of space which may be used by different kinds of motors employed should also be taken into consideration. Then again, where a manufactory is located on the upper floors of buildings, and the lower part is used for offices or stores, the jar, as well as the noise occasioned by the steam engine, would be such as to make the tenants object to its introduction; and on this account the proprietor of the building would demand a very much greater rent; so that if this rent were added to the cost of the steam engine, it would be found that it would more than make up the difference between the actual or apparent cost and the cost of running the electric motor. Besides the actual expense in dollars and cents, the question of convenience ought to be considered, because sometimes, although there may be no means of determining just what difference convenience may make financially, it is nevertheless apparent to all that it is worth while incurring additional expense, provided a proportionate increase in convenience is obtained. The superiority of an electric motor over the steam engine in point of convenience is noticeable in several points. First, it takes up very much less room, makes much less noise, and is a very clean and simple machine, which does not require a skilled mechanic to keep it in order. It does not have any stuffing boxes that have to be packed from time to time, which are liable to blow out at any time and fill the place with steam; neither does it have any steam pipes, which are likely to burst or spring a leak when least expected. There is no annoyance occasioned by carrying coal or removing ashes; neither is there the liability of injuring the work by soiling it, if the location of the building is such that it is necessary to carry the ashes or coal through a portion of the working rooms in or out of the building. When we come to compare the conveniences of the electric motor with those of hired steam power, we find that it possesses equally great advantages. If a man decides to hire power he must go into some section of the city where power can be obtained. He must content himself with rooms such as he can find. On the other hand, if he buys an electric motor he can select a building in any portion of the city that may suit him, and after finding a building entirely to his liking, can locate the motor therein in any position in which it will be the most convenient, and simply notify the electric light company to introduce the wires. It may occur to some that this is not strictly true, because he may select a building in a location far removed from the electric light mains; but this is altogether unlikely, for the reason that electric light companies run their wires through very nearly all the manufacturing districts of the towns in which they are located, and even if they did not have a wire running through the street in which he might locate himself, they would certainly run so close that they would be perfectly willing to extend their line to his place for the sake of the revenue to be derived from supplying his motor with current.

There is another way in which electric motors can be used, and in which they will be able to compete with steam engines of almost any size, and that is where the power of waterfalls can be utilized to drive the dynamos that generate the current. There are many places throughout the world where vast water-powers within 20 or 30 miles of large business centres are going to waste, where such plants could be established and made very profitable. The distance to which currents generated in this way could be carried profitably would depend very largely upon the extent of water power. If the supply be unlimited, a loss to the company of half the electric energy in transmitting the current to remote places could be afforded, and still furnish it at such price as to monopolize the business of furnishing power. Therefore, it may be said that the distance to which power could be transmitted in this way would range, say, from 10 to 100 miles, or even more.

In the foregoing remarks I have endeavored to show the various ways in which electric motors may be employed at the present time. I have tried to point out the particular uses in which they will be found more economical, convenient, simple, durable and reliable, than any other means heretofore used. In summing up the case I would simply add that the office of the electric motor at the present time is simply to develop power in small quantities, and that it may also be used as a means of utilizing the power of waterfalls that may be within a reasonable distance of large manufacturing centres.

The field which the electric motor can fill at the present day is limited to the cases cited, because we have no means of generating electric energy cheap enough to extend the sphere of its usefulness. The most economic way of generating an electric current at the present day is by the use of dynamo-electric machines, but inasmuch as these machines are driven by steam engines, and there is a loss in generating the current as well as a loss in reconverting it into power, it is simply impossible to generate the energy in the electric motor so economically as in the engine. If we were to use any of the electric batteries now known, the results would not be so good, for the reason that the cost of obtaining the current in this way is yet greater. There are batteries made which are decided improvements in point of economy over the batteries of former years; but they all generate the current by chemical decomposition of zinc, and so long as such means are used the current generated can never be cheap enough to compete with a current

Digitized by Google

generated by a dynamo machine; much less to enable a motor to develop power cheaper than a steam engine. When a battery is invented in which the material consumed by chemical action is sufficiently cheap (say, for example, coal), motors run by the electric energy developed in such batteries will surpass steam engines in point of economy; but until then they never can,

The cost of generating an electric current in a battery can be ascertained with extreme accuracy when the nature and cost of the material used is known. This is owing to the fact that in every case the current is generated by chemical action which takes place in the battery; and this chemical action, which is simply a form of motion, can only be made to develop an amount of electric energy proportional to it. A pound of zinc decomposed in a cell of an electric battery will develop a certain fixed amount of electric energy, regardless of the nature or construction of the battery or of the liquid used in it. Whether the amount of electric energy available from such a battery is more or less than that available from any other battery in which zinc is employed, will depend upon the perfection of its construction. But assuming it to be theoretically perfect, the amount will never exceed that which would be the true dynamo equivalent of the energy due to the electrical action necessary to decompose the zinc. A pound of zinc will not develop as much energy as a pound of coal, and inasmuch as a pound of coal costs a great deal less than a pound of zinc, it will be seen that if a battery could be made to use coal instead of zinc, the cost of generating the current would be so much cheaper as to admit of no comparison. To make such a battery is not an impossibility. It may not be made for years to come, and yet it may be brought to the light of day when we least expect it; but whenever it is made, or whenever a battery is made in which any other substance sufficiently cheap is subjected to chemical action, then the electric motor operated by the current of such batteries will develop power at a much lower cost than it is possible to do it with a steam engine, and it will, therefore, take its place and be the power of the future, while the steam engine will occupy a prominent position in the curiosity halls of science, and will be pointed out to the children of future generations as one of the crude devices used by their benighted ancestors in days gone by.

A SHORT SKETCH OF THE PROGRESS OF ELECTRICAL ENGINEERING IN JAPAN.[1]

I. FUJIOKA, M. E.

My present visit to this country with Mr. Yashima, president of the Tokio Electric Light Co., Japan, is to investigate the different systems of electric lighting and electric transmission of power which are now in actual use here, so that we might introduce to our country the best and most reliable system, and not to make advertisement of our work, if any. I am not well prepared to give you a full and clear sketch of the progress of electrical engineering in our country, and I think this short paper which I have the honor to read now before such a remarkable body of electric men as the National Electric Light Association would be nothing but a curiosity to you.

To begin with the electric telegraph. The first line was put up in 1869, if I remember right, with Breguet's A. B. C. instrument. Since then many improvements were, of course, introduced, and now nearly all the towns, small or large, are electrically connected so that we can telegraph from any part of our country to any part of this country or anywhere else; only it is rather expensive, *i. e.*, about $2.80 per word from Tokio to New York. The instruments we use at present are mostly Siemens' Morse ink writers, and the wires are all overhead except over some wide rivers and straits, where, of course, subterranean cables are used. The Japanese telegraphs are completely under government control.

It was in 1872 that the imperial engineering college was instituted in Tokio, and Prof. W. E. Ayrton, the well-known electrician, now in London, occupied the chair of the professor of telegraph engineering and natural philosophy, and stayed there for six years working in the line of electrical researches with Professor John Perry, then professor of mechanical engineering in the same college. These two gentlemen's names are pretty familiar to you, I imagine, from their valuable labors in relation to electrical engineering and the ammeters and voltmeters of their invention. Mr. Thomas Gray, assistant to Sir W. Thomson, then stayed with us in the college for about three years, and I have been connected with the college for a number of years, attempting to keep up with the progress of electrical applications abroad. I was here in 1884 when the International electrical exhibition was held in this city.

The telephone business is yet quite poor in our country; only the government offices and residences of high authorities are connected. Petitions for permission of organizing telephone companies for exchange systems are made from time to time but the government does not permit it for some reason or other, which I can not tell. I believe, however, it will be permitted sooner or later.

Now, as regards electric lighting, we have the Brush arc lights in some factories, mills and dockyards, and the Edison incandescent lights in some places, and among others may be mentioned 500 lamps in the Osaka cotton mill, and 330 in the imperial military college.

On many occasions, such as at the ball of the minister of foreign affairs department, on His Majesty the Emperor's birthday, November 3rd, at the opening ceremony of the bankers' meeting place and the like, we put up temporary plants with good success, and the result of this together with the most satisfactory reports on the Edison incandescent lighting in the Osaka cotton mill and the *Official Gazette* printing office, induced our people to favor electric lighting with great eagerness. The Tokio Electric light Co., which was organized some time ago, and of which Mr. S. Yashima (now in this room) is the president, has a capital of $200,000, and by the end of this year this capital stock will be doubled. The company has in hand the contract of lighting the new imperial palace with 2,000 incandescent lamps and 100 arc lights from the company's central station, located just outside the palace ground, and from which the current will also be supplied to the residences of the princes and ministers, and other houses around it. It is proposed to place five or more central stations in the city of Tokio, two in Osaka, one in Kioto, two in Nagoya, and in other places. Considering the facts that the city of Tokio is ten miles square, with a population of 1,000,000, and that there is now only one gas company, charging $2.50 per 1,000 cubic feet of gas, and having old fashioned gas furnaces, the Tokio Electric Light Co. has a great deal to do towards the illumination of the city.

In conclusion, as there are many printing offices and small factories all over the city using at present foot power or steam engines ranging from ¼ to 20 h. p., the electro motors will also, without doubt, find good places there. I hope, gentlemen, I shall be able to read a better paper when I see you next time.

1. Read before the National Electric Light Association, Philadelphia, February 17th, 1887.

GLOW LAMPS: THEIR USE AND MANUFACTURE.[1]

BY MAJOR-GENERAL C. E. WEBBER, R. E., C. B.

(Concluded from page 68.)

This gives a little history of the changes of the filament during its life. The tale told may be summarized as

1. Abstract of paper read before the Society of Arts, London (Eng.), Wednesday, December 8th, 1886

Digitized by Google

follows :—That during the first 200 hours the resistance decreases slightly, with consequent increasing brilliancy. These conditions remain nearly stationary for the next 500 hours. After that they alter perceptibly, increasing in resistance and decreasing in brilliancy in a progressive ratio. But it must not be forgotten that the increase in resistance of the filament is not the sole cause of the loss of light. As the filament ages, its original smooth surface roughens, and is consequently increased in area in larger proportions than it would naturally be decreased by the loss of bulk. The larger surface requires more current, whereas the increased resistance is gradually reducing the supply.

Another cause of the loss of light is due to the blackening of the glass by a carbonaceous deposit, which also increases with age. This latter loss in 1,000 hours' consumption amounts, in a good lamp, to 15 per cent. This clouding over of the lamp bulb is due to an internal deposit due to the disintegration of the material, either of the wire mount or of the filament.

Dr. Fleming gave the Physical Society, in 1883 and in 1885, a description of some curious phenomena incidental to this aspect of the use of glow-lamps. It is sufficient to our purpose to mention the cause and the effect.

As time goes on in the life of a glow lamp a smoky deposit is apparently inevitable ; but, quoting Dr. Fleming, "In normal use, when the lamp is not being pressed beyond the E. M. F. at which it is intended to be used, there is a general evaporation of carbon going on from all parts of the loop."

His experiments tended to show that when an excessive temperature is given to the filament by a higher E. M. F., the molecules are projected with violence against the glass, causing by the more rapid disintegration an earlier obscuration of the globe than should arise under normal conditions of consumption. The rate at which the clouding takes place is rapid in the case of some defective filaments. But as a rule makers have conquered this difficulty, and it takes place under conditions which are preventable. The loss of light is very slight, and the appearance of a clouded lamp by daylight is, I think, its most objectionable feature.

Any user of glow lamps on his own installation will find, when he replaces old ones by new, that the latter will give more light, so that, if he introduces a new lamp to replace one which has been broken at a period when most of the lamps are, say, 900 hours old, he will perceive a difference of about two or three candles if he uses 17 c. p. lamps. If the old lamps are, say, 1,700 hours of age, he may find a difference of seven or eight candles. As the current is not economized in proportion to the loss of light, he should recollect that a point may be reached when, by continuing the use of old lamps, there arises an important waste of power. Hence the public should judge of the efficiency of lamps, outside certain limits, more by their constancy of candle-power than by their length of life. Thus the best lamp is that which lives the longest with least variation of light.

Next we may consider the test for vacuum, which in a laboratory can be made with the induction coil as already mentioned by the following test :—Hold the lamp in one hand, and bring the leading in wires in proximity with the pole of a high potential induction coil. If the vacuum is bad, a considerable glow is visible inside the bulb ; if good, the glow decreases, and will be evidenced by the length of the spark between the coil and the wires, so as to be almost invisible, and the spark outside is very faint and short.

The vacuum test may also be made by the measurement of heat, to which a lamp burning for a given time will raise a given volume of water in which it is immersed, but this test has one defect.

Another, but a rougher test, is one which is made by sealing off the lamp with a short length of the vacuum tube attached, and then cutting or breaking its end under mercury, when a bubble denoting the presence of air, if it exists, will be detected as soon as the mercury has risen into the bulb.

The users may make an approximately good test, by observing the presence of luminosity when a lamp is rubbed with the fur of a cat's skin in the dark, or by the touch. The temperature of the external surface of the bulb after it has been alight an hour or so, will show undue heating which will signify the existence of a bad vacuum.

The scientific test of the candle-power of these lamps involves us in the form of photometer to be used, and above all the standard of light. The latter is a question which is still under the consideration of a committee of the British Association. It appears to me that it is not much nearer decision than it was when brought before the congress of electricians, at Paris, in 1882, when the Carcel lamp and the candle still had their supporters ; but there may be members of the committee present who can enlighten us thereon.

For manufacturing purposes it is the practice, as I have shown is done by Dr. Fleming, to use standard glow lamps, which are frequently renewed before they have time to deteriorate. These standards are obtained by photometric comparison with flames or sections of flames of known value ; ultimately referable to an average of a series of tests with the standard sperm candle. But when it comes to competition tests between the lamps of various makers, that which is most relied on is the life test, for although that test is also a trial of the carbon, it is now generally understood that most fairly well constituted filaments will live in a really good vacuum.

To consumers the life test is a matter of economy. They can easily be brought to understand that if their lamps are used with a higher E. M. F. than that for which they were made, over-incandescence takes place, as well as the "clouding" already referred to. This is commonly called "overrunning" lamps, and it is very easily brought about by want of arrangement at the source of the current to secure regulation of the pressure. Often the purchaser of lamps condemns them for their short life, not knowing that all along it is his own fault, and that through frequent over-incandescence, his eye has lost the power to judge, even approximately, of the candle-power he is extracting from them. It is not to be expected that he should have a photometer in his house to check this, but it is not too much to require him to have a voltmeter at a point where he may occasionally test for himself, whether the potential between his mains is dangerous to the endurance of the filaments in his lamps. If, however, his lamps behave as those did as shown in the table already mentioned, he should observe his voltmeter with the view to underrun them in adolescence, so that a healthy maturity and vigorous old age may follow.

There are those present to-night, I believe, who can give the audience very interesting information on these matters.

In some lamps defective cementation of the filament to the wire mount shows itself after a short life by a giving way or a fracture at that point ; but no eye test can, beforehand, detect the liability to this fault. It is said that there is a greater tendency to give way at the junction with the negative metal pole, and from this it has been suggested that when alternate currents are used, their liability to failure would be modified. It will be very instructive if some one of my audience can enlighten us this evening as to the effects on filaments of the use of alternating currents.

Time does not allow of my touching on several points of interest in connection with glow lamps, brought before electricians in late years by Mr. Wilhelm Siemens, of Berlin, by Cruto, of Milan, and by Bernstein in this country.

I trust my audience will realize that my object this evening has not been to enter on too technical or debateable

Digitized by Google

ground, but rather to engage their interest in the subject from its industrial point of view; and that they will also look with approval on my abstention from touching on the patent and legal part of the question, which has so long been, and still is, a matter of controversy.

DISCUSSION.

The chairman (Prof. W. G. Adams, F.R.S.) said General Webber had done well in bringing before the Society of Arts the special points of interest and importance in connection with the use and manufacture of glow lamps. It might not be amiss, as a matter of history, to draw attention to the characteristic curves of different glow lamps, and to the state of knowledge which existed on the subject in 1882, when a complete series of tests were made at the Crystal Palace exhibition. The tests made on this occasion were represented on the diagram on the wall, the curves representing the different incandescent lamps, namely, Swan, Edison, Maxim, the British, and the Brush electric lamps. The candle-power, and watts per candle, were also given. The best result attained at that time was four watts per candle, by two kinds of Swan lamps, the high resistance, and the small eight or ten candle lamp. Next to that came an Edison, which took nearly five watts per candle, and then the others, in the order named. He did not think electricians would approve of the use of earth in place of the insulated wire to the dynamo, as suggested by General Webber. Surely this would be an element of disturbance, and of considerable danger in the case of machines of high potential.

Mr. W. H. Preece, F.R.S., said one of the most important points which had been dwelt upon was the life of the lamp, and the various improvements which had been made during the last few years to secure this extra life, but he did not think they could congratulate themselves upon the longer duration of the lamp. His own complaint was that the lamps were too long-lived. In 500 hours a 16-candle lamp descended to about 8, as a rule; what was wanted was a lamp which would maintain constancy, and there was no mode of attaining this more effective than the use of secondary batteries. It was not possible for any isolated installation to be effective, or complete, unless there were secondary batteries, as had been fully demonstrated in the lighting of the room in which they were now assembled. The amount of money saved in renewing the lamps alone would repay the interest on their cost. With regard to the manufacture of glow-lamps, it could not be denied that this was increasing very fast; only the other day, he heard that at Edison's factory they were turning out about 3,000 a day; and, from a rough estimate which he had made, he found that during the last four years the manufacture had increased so fast that probably, at the present moment, 10,000 lamps were made daily, as compared with 10 a day four years ago. He did not agree with the chairman in his condemnation of the use of earth, nor did he understand General Webber to advocate the use of earth, but only to speak of the use of the return wire in the electrician's meaning of "earth."

Dr. Fleming said an incandescent lamp was not only a useful thing, but it had about it many points of great interest in physics. Many persons had the impression that the interior of a glow-lamp was a place that was empty of all air particles, but this was not the case; it was as full as it well could be. Maxwell had shown that, in a small cube of .00001 inch, there would be found 100 million molecules of ordinary air, so that, in a cubic inch of air, there were a number of molecules represented by 100,000,000,000,000,000. In a Swan lamp, when exhausted to one-millionth of an atmosphere, there remained some 400,000,000,000,000 molecules of air. As it took about ten days to count a million, a simple calculation would show that to count the number of molecules in such a vacuum would take 120,000 years of continual counting. The fact that the glow-lamp was as full of molecules as it well could be led to many interesting consequences. The atoms were, however, so far apart that any one of them could go from one side to the other without coming into collision. In an ordinary glow-lamp, when burning, from all parts of the carbon filament molecules of carbon were being thrown off by the heat, which gradually produced the cloudy appearance that was sometimes seen. If this went on equally, the darkening was equal, but in a glow-lamp the heat was greatest where the resistance was greatest, so that if, by accident, on any part of the filament there was a spot of greater resistance, the scattering of molecules would take place quicker at that part, and the filament would be cut through. The greatest projection of molecules would take place to the parts of the glass which were not shielded by the loop. He held in his hand an Edison glow-lamp, clouded with transparent copper, which had been deposited from the clamps in burning. With regard to testing incandescent lamps, there was no difficulty in making electrical measurements with any degree of accuracy, but what could not be done was to measure the illumination with equal degree of accuracy. The plan of measuring glow lamps by means of candles was a barbarous one, and ought to be got rid of, as a standard candle would vary to any extent up to 20 per cent. Therefore, until they got something more accurate as a standard light, research could not be pushed forward with any degree of accuracy. A suggestion was made at the Paris exhibition to use melting platinum for a standard of illumination, but nothing had as yet been done in this direction. It was probably possible to use as a standard the radiation from a material such as carbon, in which was being wasted, from a definite surface area, a definite quantity of electric energy per second, and, by this method, they would have better means of carrying on the investigation of characteristic curves and the question of illumination. The standard which he used was Siemen's acetate of amyl lamp, which gave very fair results, and, besides this, there was Methven's gas-flame standard, and Harcourt's air gas-flame standard, which gave fairly good results.

Prof. Forbes said that various speakers had touched upon the standard of light, and General Webber had expressed an opinion that they were in the same position as they were several years ago; but upon this he ventured to differ, as he considered they were far ahead of what they were a few years back. The B.A. committee, of which he was secretary, had been carefully studying the subject, and though many thought it was a slow process of elaboration to get a standard from the gradual way in which the committee had been working, yet he believed every one would agree in the end that it was not wise to jump too hastily at a conclusion. Dr. Fleming had said that he thought a standard of light should be produced by electric energy, but there were two difficulties in the way; first, you had to know what was the temperature of your standard; two equal areas of incandescent material might be using up the same electrical energy, and yet the light be totally different; and, in the second place, the whole of the energy being used up was not utilized for the purpose of light. The question was not quite so simple as it appeared, but he hoped that in time such a standard might be obtained, though, at the present moment, the experiments which had been made did not tend to make them hope very much that they would be able to determine, in any convenient manner, the temperature of an incandescent material rendered incandescent by a current of electricity.

Prof. Silvanus Thompson said he happened to know that many improvements had taken place which had not been referred to by General Webber; and in the report of a certain law suit there was reference to a mysterious process called "running on the pump." Whether the processes were universally known, or not, he could not say, but it was quite possible that there might be a few details which had not been revealed in the account of how glow lamps might be made. As a rule it was found when lamps failed,

Digitized by Google

that it was through a fracture of the bridge just above the joint where it was cemented to the wire which led in, but very often the fracture took place not at the heel of the bridge, but just below the crown of the bridge. He should like to know why it was that this occurred; had it anything to do with the bending of the material in the process of formation, or had it anything to do with the distance between the bridge and the surrounding bulb? It had been suggested that electricity possessed a sort of inertia, and did not like to go round a bend, but he could not quite agree with this view, and should be glad of any information upon the point. He considered the use of the word "filament" for the conductor, or bridge, a misnomer, as it was misleading; it should be called a "strip," or a "wire." To give the new name of "filament" to that which was perfectly known before as a carbon wire or carbon strip did not constitute it a new invention, though it might be very clever to invent a new name for an old thing.

Major-General Webber said that, for the exhibition which he had been able to produce that evening, the thanks of the members were due to the directors of the Anglo-American Brush Corporation, who had placed their apparatus at his disposal, and to the officers and assistants of the company for the hearty way in which they had come forward and helped him by showing so accurately and carefully the processes in which they were daily engaged. He thought the warmest thanks of the meeting were due to them, as well as to the worthy chairman.

On the proposition of the chairman, a cordial vote of thanks was passed to Major-General Webber, and to those who had assisted him in carrying out the different processes of manufacture.

PRACTICAL NOTES CONCERNING THE CONSTRUCTION, USE AND MANAGEMENT OF STORAGE BATTERIES.[1]

BY A. RECKENZAUN.

(Continued from page 51.)

In secondary batteries the storage of energy is effected without transmutation, that is to say, the battery receives when being charged an electric current, and gives it out in the same form, the activity of the plates depending entirely upon the electrical energy which has first been expended upon them. In primary batteries, on the other hand, electrical energy is manifested or produced by chemical means; many run-down primary batteries may be re-excited by sending a reverse current through them, when they become secondaries, but then their action is exceedingly limited, because the spent or decomposed acid cannot, by means of this excitement, be changed into its original composition, the limited secondary capability created by such a process of charging being mainly due to the gases occluded in the plates. The true secondary battery is Grove's gas-battery or voltameter, where the evolved gases furnish an electric current direct; it consists of two similar platinum electrodes, one of which is coated or in contact with hydrogen and the other with oxygen. The amount of oxygen which platinum can store or hold in suspension is exceedingly small, the metal itself not being oxidizable, though it has a great affinity for hydrogen. The use and advantage of an oxidizable metal for the purposes of electric storage therefore becomes manifest, and it has been found by Planté that lead plates are easily oxidized, whilst they are capable of retaining their energy for a very long time.

CAPACITY OF STORAGE BATTERIES.

It seems that the energy which can be stored in a secondary battery is really a measure of the amount of oxygen and hydrogen taken up by the plates within the liquid. The liquid in the case of lead accumulators is dilute sulphuric acid. If we place two clean pieces of sheet lead, separated from each other, in a vessel containing acid, and if we send a current through them of sufficient intensity to decompose the liquid into its constituent parts, we then observe that one of the plates will soon be covered with a brownish film. This film is peroxide of lead; the oxygen has combined with the plate which was joined to the positive pole of the charging apparatus, and this plate is commonly called the *positive*. We next disconnect the terminals of the lead plates from those of the generator, and join them to a conductor capable of absorbing the current, placing a galvanometer in the circuit at the same time, in order to measure the current given off; this first discharge will be very feeble and of an extremely short duration, though the charging may have been going on for a long time. The fact is that we have stored oxygen whilst the hydrogen escaped; the negative plate, being clean and smooth, could not retain this gas, the storage of which must be effected by occlusion. If we now reverse the poles of this Planté cell and recharge it, the clean plate will be oxidized, whilst the oxide on the other will be gradually reduced to metallic lead of a porous consistency; the surface is thus no longer smooth, therefore capable of occluding *some* of the hydrogen, and its *capacity* has increased slightly. By many reversals of this kind the lead plates are deeply acted upon, and at last a considerable storage capacity is obtained.

Throughout these notes we shall frequently use the term "active material" in lieu of peroxide, spongy lead, or oxide paste, meaning only those parts of plates which have the power of absorbing the gases given off during electrolysis.

"FORMING."

Planté called his method of preparing lead plates "forming." It was a tedious and expensive process. Faure introduced an important improvement by coating the plates at once, mechanically, with a porous material, a paste of red lead; he obtained thus quickly a considerable storage capacity by merely peroxidizing the material on the positives, and at the same time reducing that on the negatives without any reversals. It really amounted to a thorough charging of the battery, although this first charge is also called "forming," because the oxide paste on the negative plates has to be reduced to metallic (spongy) lead before it can assume its full activity.

Originally, both the positive and the negative plates were pasted with red lead ($Pb_3 O_4$), but it has been found that in the process of "forming" the positive material was peroxidized long before the paste in the negatives could be reduced to spongy lead; hence litharge (Pb O) was substituted for minium in the negative plates, and this being a lower oxide, the requisite deoxidation could be effected with greater economy as regards energy and time. Further experience, however, showed that even with this distribution of different materials, the forming could not be completed at the same time in the negatives as in the positives, so that at last it became customary to form the negatives separately in special boxes containing "blind" positives; the energy expended in reducing litharge to spongy lead is at least twice that required for the peroxidation of red lead. The labor and care which such a double system of "forming" involves is not thrown away; indeed it is necessary for the preservation of the active material in the positive plates, which becomes extremely brittle if subjected to the same length of treatment as that of the negative plates.

RELATION OF STORAGE CAPACITY TO QUANTITY OF ACTIVE MATERIAL.

One ampere of current in doing the work of decomposing acidulated water releases .000158 of a grain of hydrogen, and its chemically equivalent proportion of oxygen per second. "In this action the energy connected to one equivalent H 1 grain, O 8 = water 9, is measurable as 6,840 foot pounds, and the electric conditions represent an

1. From the *Electrical Review*, London.

Digitized by Google

E. M. F. of 1.5 volt." (Sprague, Electricity.) There being a definite relationship established between the current, time and volume of gas liberated, the capacity of an accumulator can best be measured electrically. In practice, for convenience, this capacity is expressed in ampere hours instead of ampere seconds, or coulombs; one ampere hour is equal to 3,600 coulombs. With regard to the amount of active material necessary for the absorption of given quantities of hydrogen and oxygen we find no reliable data suitable for immediate practical application. Chemical equivalents do not assist us, because in practice it is utterly impossible to distribute the materials in such a manner that every atom could do its duty. Gladstone and Tribe have made most elaborate experiments on the relative quantities of the two gases deliberated and fixed with a given current and in a given time, but in their publications we find no exact description as to the weight or volume of lead acted upon. Since a free access of the electrolyte must be advantageous it is perfectly natural to suppose that very thin plates, with a comparatively large surface, will give a greater storage capacity for a given volume of active material than thick plates where diffusion is more difficult. We are, for mechanical reasons, forced to employ plates of a reasonable thickness, and with the aid of examples taken from well-known forms we may arrive at practical conclusions pointing to a maximum useful effect. The following figures bearing upon this question may be useful; the author has deduced these from exhaustive experiments made by him with accumulators of different types supplied by the Electrical Power Storage Co. Weights and dimensions refer to the active material (paste) only, and no account is taken of metallic supports.

(*a.*) *Cell used for locomotive purposes.*

Capacity 150 ampere hours.

Weight of peroxide in positive plates....	6.07 lbs.
" spongy lead in negative plates	5.43 "
Total weight of active material.. ...	11.50 "

The capacity per pound of active material is, therefore, 13 ampere hours.

There are 23 plates in this cell, 11 positives and 12 negatives; the object of the odd number of plates is to have for all the positive plates in a cell two opposing negative surfaces. In each plate the active material consists of 560 small square slabs (square holes filled with paste); the free surface exposed to the electrolyte by these 560 tiny slabs, when counting both sides is 53.7 square inches. The thickness of the positive plates is one-eighth of an inch, and of the negatives three-thirty seconds; the volume of peroxide in the positive plates is thus 36.9 cubic inches, whilst the spongy lead in the negatives occupies 30.23 cubic inches.

(*To be continued.*)

THE HURLBUT FLEXIBLE CONDUIT.

THE illustration below shows a longitudinal section of Hurlbut's flexible joint, for electrical conduits, sewer pipes, etc.

The joints are made with indestructible materials, and it is claimed, will always remain flexible, and hermetically sealed.

The flexible feature of the joints prevents cracking and leaking, from settling of the pipe, which are likely to cause trouble where the joints are fixed or rigid.

The conduit is made of fire-clay thoroughly vitrified and glazed. Its crushing resistance is given as 9,000 lbs per square inch. Clay being a perfectly inert substance causes no corrosion of the insulation of the wires. The nature of the material used and the manner of making and sealing the joints of the pipes and joining to the man-holes are said to secure an entire exclusion of illuminating and earth gases from the system, a most desirable end in any underground system. Water as well as gas being excluded from the system, the cables should remain clean and free from deterioration.

Curved sections of the pipe are made which will be of great practical utility in passing obstructions found in line of the conduit, while building.

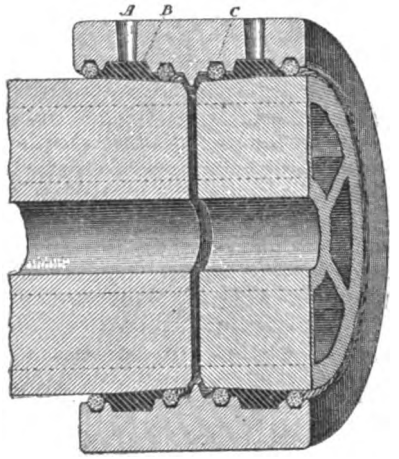

C.—Represents Asbestos gaskets, recessed into the coupling, and resting against the pipe.

B.—Is a cavity formed between the gaskets, which is filled with a permanently plastic sealing material.

A.—Represents openings through which the sealing material is poured.

This system is the invention of D. N. Hurlbut and his brother, S. E. Hurlbut, of Chicago, who have patents upon the method of making the joints, and upon the pipe and dies for making the same. Mr. D. N. Hurlbut is also the inventor of an ingenious apparatus for drawing wires and cables into underground conduits. It consists in forcing a needle wire through a curved pipe into the conduit by means of pressure rollers, and attaching a strong rope thereto, and drawing the rope into the duct by withdrawing the needle. The rope is then used to draw the cable into the duct.

THE NATIONAL ELECTRIC LIGHT ASSOCIATION.

THE PHILADELPHIA MEETING.

THE fifth meeting of the association was held at Philadelphia, February 15th-17th, in the hall of the Union League.

The convention was called to order shortly after noon on February 15th by president Morrison, who addressed the meeting as follows:

Gentlemen of the Convention—Under the resolutions passed at the Detroit meeting, the National Electric Light Association is called in convention in this goodly city of Philadelphia.

The history of the association shows a yearly increase in numbers, in influence and in financial standing. An exhibit of its progress ought to be a source of gratification, not only to those who have devoted their time, their money and their intelligence to this association in Chicago in 1885, but to those who have from time to time come into its ranks to swell its numbers, extend its influence, and strengthen its financial condition. In February, 1885, at the Chicago meeting, 53 companies were represented; at the New York meeting 74 companies were represented; at the Baltimore meeting 102 companies were represented; at Detroit, 124; and to-day our muster rolls bear the names of 159 representative companies gathered from all parts of the Union. At the New York meeting the treasurer reported having received for membership fees $620, and expended $415.67. At the Baltimore meeting the collections amounted to $398.38; the expenditures $537.49, leaving a balance in hand of $860.89. At the Detroit meeting Mr. De Camp presented the report of Mr. Cooper, treasurer of the association, which was to the effect that there was $660 in the treasury, with debts amounting, in round numbers, to $1,200; uncollected dues upon the books, $650. To-day the report of the secretary shows all the bills against the association paid, and a balance on hand of $250.50.

Little or no improvement has been made in either arc or incandescent lighting during the past six months. The attention of investigators has been largely turned in the direction of storage batteries, but on this side of the water little or no progress seems to have been made in that direction. The foreign reports show that storage batteries have been sufficiently perfected to be used both for lighting and power; but in this country, with the exception of an installation of 300 lights in Baltimore, I know of no attempt at any extended lighting from storage batteries up to the present time. Investigation is still being pursued, however,

Digitized by Google

in this direction, and I hope and believe that the next 12 months will, at least to some extent, solve the problem of electric lighting from storage batteries.

Very few accidents have occurred arising from electric lighting plants, when we consider the extent to which the service has grown. The management of the various companies throughout the country have during the last few years paid strict attention to the organization of their construction corps, so that the record for the past year closes up fairly good.

In this city it is to be regretted that, owing to defective workmanship in the running of wires in the Temple theatre, the destruction of the building was attributed by a competent jury to that cause. This case should be written down as a danger signal by which future operations should be guarded from blunders or carelessness which might produce a like disaster. Taking the record of the year, however, we find that fewer accidents have occurred in the electric lighting business than that of almost any other industry employing a like number of men. (The president then read an extract from the paper of Mr. Henry Hine, entitled, "Electricity in its Relation to Insurance," read before the Electric Club of New York recently).

The programme of proceedings was then given, and the president continued:

It is hoped that the convention will so arrange its hours of meeting as to enable every member to be in his place, and contribute his proper share for its information. With so intelligent a body of men it is hardly necessary for me to say that each subject will be considered calmly and dispassionately, without bias and with the best judgment of the members of this association.

The reports of the proceedings of this association are being sought for, not only by all those engaged in the electric lighting business in this country, but many requests from those in England, France and Germany come to us for copies of our proceedings.

With the broad field of the whole world before us, with an audience not confined to those gathered within the walls of this room, but extending over this entire continent, as well as the countries just named, every word should be well weighed, every expression closely guarded, and every meaning clearly expressed before being set forth as the utterance of this association.

One of the subjects which has engrossed the attention of the National Electric Light Association ever since its organization, has been that of underground wires; and in this connection Prof. Plympton, of the Brooklyn Subway Commission, has presented a most exhaustive report of his observations and investigations in Europe. To none would a perfect system of underground wires be more welcome than to the electric light companies, and all eyes are turned toward those cities which are making experiment and investigation in that direction. The ground taken by the electric lighting men throughout the country is that, owing to the vast expense attending the placing of wires underground, they should not be compelled to adopt any ill-digested plan; and that hasty legislation, until such ill-digested plan had passed beyond the bounds of experiment and into the broader field of practical use, would be a great hardship, if it would not seriously cripple the industry which is yet, one may say, almost in its infancy, although 150,000 arc lights are now burning throughout the streets of this Union.

The president then introduced Mr. Thomas Dolan, president of the Philadelphia Brush Electric Light Company, who in turn introduced Col. A. L. Snowden. The latter welcomed the convention to the city of Philadelphia in a very happy manner, and remarked, among other things, that he looked to America for the invention of the perfect storage battery by which electric lighting will be made as universal as it deserves to be.

The report of the secretary was then presented and accepted.

The report of the legal committee was next presented by Mr. Arthur Steuart, who announced that the commissioner of patents, Mr. M. V. Montgomery, had signified his intention of being present.

As the commissioner had not yet arrived, the reading of the report was postponed, and that of the committee on Standard Wire Gauge taken up and read by Mr. A. V. Garratt.

Mr. President and Gentlemen:

Six months ago in Detroit, when on the motion of Mr. DeCamp a committee was appointed to still further investigate and report upon the subject of a wire gauge, the first thing in regard to the new committee which struck me, was that of all the members present at that convention, I was probably the least fitted to act as chairman, and represent the National Electric Light Association before the community in regard to its endeavor to simplify the dire confusion in which the wire gauge question now is.

That conviction has been growing upon me ever since then, and in rendering my report I labor under a certain embarrassment; realizing the large interests involved, and that perhaps if we cannot untie this Gordian knot, we may have to cut it. I shall so far as is possible, lay aside personal opinion and prejudice and voice the opinion of this committee as a whole.

It will be remembered that at the last convention I suggested that perhaps as electric light men use wire chiefly to conduct currents of electricity, a gauge might be devised, the numbers of which should bear a self-evident relation to the resistance of wires of sizes so used, drawn from copper of commercial purity. For example, No. 4 should indicate without any calculation the resistance of a copper wire of that particular size; No. 10 the resistance of that wire, and so on. Although the idea was my own, so far as I know, and I was therefore naturally interested in it, I am frank to confess that after a very careful consideration and much calculating we have been obliged to abandon the idea as utterly impracticable, and right here let me say that if the report I shall make proves to be of any value to this association, much of it will be due to the zeal of my associates—Mr. Slatterly and Mr. Stanley.

Having made up our minds that we were on the wrong track, we retraced our steps, and carefully considered the other gauges now in use in this country to see if by a united effort on the part of the large users of wire some present existing gauge could not be brought into universal use; realizing that even a bad gauge in general use is better than half a dozen good ones in partial use. Without going farther into the matter I will simply say that in the opinion of this committee, there does not seem to be much hope in this direction.

I have carried on a voluminous correspondence with the large makers and users of wires, a part of which was a circular letter which I sent out, on the part of the committee. This circular stated in substance, that a new gauge, based on the decimal division of some standard unit of measure was proposed, and that it was thought best to adopt the ten-thousandth of a meter as the standard of measure, and to adopt a gauge the numbers of which should represent the even ten-thousandths of a meter.

I am pleased to say that a very great many houses, partly indorse our plan. There were however some objections raised, and I will here state the reply of this committee to them, before I say much about the gauge we are to recommend. The objections are as follows:

First, this association has already adopted a gauge. Second, the Brown & Sharpe gauge is good enough. Third, the one-thousandth of an inch is good enough. Fourth, an asymptotic gauge would be the best one to adopt. Fifth, the gauge must be universal, that is adapted to all uses of wire. Sixth, the difference in diameter between consecutive numbers of the metric gauge is too great for electric light purposes. Seventh, why not adopt the Edison gauge which has recently been published?

I think it will not be presuming to say that these questions have suggested themselves to us, and have been discussed long before they were raised as objections by others. It is evident that some of them need no answer at all; in regard to other of these objections I may say a few words to define our position on this question.

Reply to the first objection: "We have already adopted a gauge; namely the English standard."

Out of the many letters we have received, only one voice has raised this objection.

Mr. W. D. Sargent, general manager N. Y. & N. J. Telephone Co., says: "After careful consideration we decided to follow the footsteps of our English brethren and recommended that the Association (National Telephone) adopt the 'standard gauge.'

"This was done after a full discussion at our annual meeting at Providence in 1885.

"I am under the impression that the National Electric Light Association adopted the 'standard gauge' also, and regret to learn from your letter that they think of retracing their steps.

"It is my opinion that the action contemplated in your letter will only defer the universal use of but one gauge and add another to the list of gauges, already too numerous to be worth mentioning."

Without entering into discussion, as to whether we are pushing onward or retracing our steps, as the gentleman would imply, I will simply read from a letter received from a manufacturer not far from here.

Mr. Alfred T. Moore, manufacturer of insulated wire, etc., Philadelphia, writes:

"Some time ago the telephone people adopted a standard gauge, but, so far as our experience has gone, we have but one customer using this gauge, and that is the company that brought it out."

I am also assured by other manufacturers that they have not, since this gauge was adopted two years ago, sold a mile of wire by the English standard gauge, unless it be to this particular customer. The proof of the pudding is in the eating. Therefore, your committee does not recommend the continued recognition of the English standard as the adopted gauge of this association.

Reply to the second objection: "The Brown & Sharpe gauge is good enough." But one voice has been seriously raised to advocate this opinion. Mr. H. B. Thayer, of the Western Electric Company, writes as follows:

"This company would much prefer that no new gauges be

Digitized by Google

originated. We believe the B. & S. best, and we use it exclusively."

We are inclined to agree with Mr. Thayer, in so far that we believe the Brown & Sharpe gauge is the best now in general use in this country, but we also believe that if any one is well qualified to express an opinion on this subject it is Messrs. Brown & Sharpe themselves. I will quote from their letter.

"We believe the 'American Standard Wire Gauge' is the best of its kind in use, because the numbers are in geometric progression. We also believe it folly for English-speaking people longer to adhere to this or any other gauge of its kind."

When the makers and inventors of this gauge admit of their own accord that it has outlived its usefulness, why should we advocate its adoption? Therefore, your committee does not recommend the adoption of the Brown & Sharpe gauge by this association.

Reply to the third objection: "The one-thousandth of the inch is good enough." This is the most serious objection that can be brought against our plan, and I propose to answer it here and now. And in order to do so, I must inquire, is this discussion to establish a unit of measure, or is it to establish a wire gauge? If we are seeking for a unit of measure, by which things of small dimensions may be accurately measured, and fine working machinery constructed, why then I would say with Romeo, "In delay we waste our lights in vain, like lamps by day." But if we are seeking to establish a wire gauge, then the subject merits further discussion.

What is a wire gauge? Obviously it is a series of numbers increasing in regular progression, 8, 4, 5, 6, 7, 8, 9, etc., without any half numbers or any gaps in their regular progression. When applied to the sizes of wire, does the one thousandth of an inch meet these requirements? Most assuredly it does not. Present requirements for electric lights and power purposes call for wires varying from one-thousandth of an inch up to one-half an inch, or 500 one-thousandths. This means five hundred numbers. Ob viously, this is out of the question. Wire makers, especially wire coverers, cannot be expected to carry five hundred sizes of wire in stock, and if they did so, it would be unnecessary. Then it may be said, carry in stock only those thousandths which are most in use, as for example, 204—No. 4, B. & S. G.; 162—No. 6, B. & S. G.; 101—No. 10, B. & S. G., etc. If you do that, your gauge becomes a lot of irregular numbers, very difficult for the expert to remember, for example, a wire much in use is No. 10, B. & S. G. It is 101-thousandth of an inch in diameter. But how is the whole community to remember that? Probably every house in the land, engaged in covering wire has on hand a variety of covered wires of 101-thousandths of an inch in diameter. I doubt if many or even if any of them, have on hand the even number 100-thousandths of an inch, covered and packed ready for the market. It may be said: "But why not settle down to these even numbers, 50, 60, 70, 80, 90, 100, etc.," and let them represent the even thousandths of an inch, and make that our gauge. Instantly the difficulty arises that these numbers vary too much from one another. No. 90 may be too small, and No. 100 may be too large for a specified purpose, and a fraction must be introduced to indicate the size required.

No; from its very nature the thousandth of an inch cannot be converted into a gauge for every day use by the whole wire using community. Large users of wire do order in the thousandths of an inch. They are highly to be commended for so doing. But this is not the question we are here to discuss. If we understand it aright, what is wanted is not a unit of measure, but a wire gauge.

Therefore, your committee does not recommend this association to adopt the thousandths of an inch as its authorized wire gauge.

Reply to the fourth objection: "An asymptotic gauge is the best one." There is but one voice that advocates this idea. Captain O. E. Michaels, U. S. ordinance department.

I quite agree with him, that it would have been gratifying if this association could have consulted with the American Association of Electrical Engineers on this question. It is a broad question, as he has said. The arguments in favor of and against an "asymptotic" gauge are many. I do not propose to enter upon them here.

Their intelligent discussion would have to assume a familiarity with conic sections and the calculus, and I fear we should be using valuable time without getting much nearer the object of this discussion. I think you will all agree with me, that to attempt to get the American wire users as a class of men to adopt a wire gauge, the comprehension of which presumes a working familiarity with the higher mathematics, and whose very name must ever be a stumbling block to the ordinary mechanic, is an undertaking that we well may shrink from.

This must not be construed into a reflection upon the intelligence of this association. It is simply a frank admission that we do not care to discuss fine mathematical questions in business hours. Therefore, your committee does not recommend this association to consider the adoption of an asymptotic gauge.

Reply to the fifth objection: "The gauge must be universal," I have conversed with large wire makers, and from them I gathered that it was almost out of the question to hope for anything like co-operation from trades other than our own. In the thousand and one uses to which wire is put, the question of gauge is trifling compared with our own case. The makers of pins, or barbed wire fence will not and cannot be expected to take a very lively interest in the way we measure our wire. To the telephone and telegraph people, a particular gauge is more a matter of convenience than a dire necessity, as in our case. Therefore, this committee does not recommend this association to wait for co-operation.

Reply to the sixth objection: "The numbers of the proposed metric gauge vary too much." That is, consecutive numbers are too far apart as to size, and in practical work, one number may be found too large, and the next number too small. I shall answer this objection with a few electrical figures, which shall enable us to determine if it is really so.

As the variation in diameter increases in regular arithmetical progression, the difference in size is of course more marked between the small numbers, than it is between the large sizes. I shall, therefore, seek my illustration from rather small sizes of wire, because in regard to these the objection is more pertinent. No. 14, B. & S. G. is a rather small number, which is much in use by electric light people, in fact it corresponds very closely in size to the smallest number in the new Edison standard gauge, in a published account of which is a statement, that this is "the smallest found to be mechanically and electrically efficient in the equipment of buildings with Edison conductors." Therefore, it is appropriate to bring the objection against this particular size. The difference is conductively between No. 14 B. & S. G. and its next largest size No. 13, is about 30 per cent. of its total conductivity. The difference in conductivity between corresponding numbers of the English standard, Stubs, and the old London gauge, is not far from the figure I have stated. The corresponding number in the Edison standard gauge, varies in conductivity from the next number by 40 per cent. The corresponding number in the gauge which your committee is about to recommend, and against which the objection has been brought varies in conductivity from its next larger number by only 16 per cent. In view of these figures your committee does not recommend this association to recognize this objection as valid against the metric gauge.

Reply to the seventh and last objection: "Why not adopt the Edison standard gauge, which has recently been published?"

Replying to this objection places your committee in an embarrassing position. We trust that you will recognize the delicacy of our position, and not oblige us to discuss this gauge. A large and powerful company has seen fit to publish a system of wire measuring, which it has found convenient for its own particular uses; it has attached its own name, and now publishes it as a candidate among the other gauges now striving for national adoption. This is too broad a question to be treated in this way. Personally I opine, and I voice your committee in this statement, that the gauge which eventually comes into general use, will not be the Brush gauge, nor the Edison gauge, nor the Thomson & Houston gauge, nor any one else's gauge. It will have to be a national gauge, independent of any particular system of lighting, or any particular company's name or patronage. Any action contrary to this, would be contrary to the very spirit of this association. Realizing that there are elements of danger in the national adoption of this gauge, and not seeing merit enough in it to warrant its general use, your committee does not recommend this association to adopt the Edison company's gauge as its recognized standard.

The gauge which we do recommend, I will briefly describe, but will not defend, knowing right well that it needs no defense. You will remember that the chairman of your committee on wire gauge last year closed his argument by reading a letter from Mr. F. R. Welles, of Antwerp, in which a metric gauge was suggested, and the statement made that generally throughout the continent of Europe wire was designated by a fraction or multiple of a millemeter. Mr. Pope had the foresight himself to predict that soon the same idea would take hold of the minds of men on this side of the Atlantic.

Your committee has worked the matter into shape, and the proposed gauge may be described as follows. A series of numbers from one to one hundred, to represent tenths of millemeters, that is No. 1 to equal $\frac{1}{10}$ millemeter, and No. 2 to equal $\frac{2}{10}$ millemeter, and so on. No. 1 will be about the size of No. 38 B. & S. gauge, and No. 100 will be about the size of No. 000 B. & S. gauge. The sizes of the wire will vary about the right amount for electric light purposes. They will possess this property; the conductivities of the wires varying directly as the squares of their diameters. Any workman can at once tell that No. 8 has 16 times the conductivity of No. 2 without referring to any table. I need not argue the advantages of such a gauge. Then again, the gauge unit would be of the same system, as that underlying the ordinary units of electrical measure. The volt is a metric unit. So it is with the dyne, the erg, the watt, the coulomb, the ampere, the farad, and the ohm. These are units that electricians use in their daily work. They are all based on the metric system. What stronger argument than this can be brought?

Digitized by Google

Your committee would then respectfully make the following report:

To the National Electric Light Association, assembled in convention, February 15th, 1887.

GENTLEMEN:

Your committee on wire gauge report that after a careful consideration of the whole subject they recommend as follows:

1st. That the British (so-called) standard no longer be recognized as the gauge of this association.

2d. That a series of numbers from one to one hundred, each number representing the tenth of a millemeter, be adopted as a gauge, in conformity with general use in continental Europe. This gauge will cover all numbers from 38 to 000 B. & S.

3d. That this gauge come into effect in six months from the present writing, or at the next convention of this association.

4th. That it be called the National Electric Gauge.

5th. That a committee be appointed to properly tabulate this gauge, working out columns of figures representing the sectional area in thousandths of a millemeter; the sectional area in thousandths of an inch; the ohms per thousand feet; the pounds per thousand feet; the ohms per foot; the nearest corresponding number on Brown & Sharpe's gauge, and other information such as shall seem best.

6th. That this committee having taken all reasonable precaution to insure the accuracy of their figures, have the table electrotyped, and a copy sent to every wire maker in the country, with the request that he publish it in his circular and price-list, and mail a copy to his customers on the first day of next July.

7th. That the members of this association pledge themselves to purchase of a reputable gauge maker, on or before the next convention of this association, a gauge or micrometer, reading in the numbers of the National Electric Gauge, at a cost not greater than that of gauges and micrometers now made to measure in the thousandths of an inch.

8th. That the members of this association offer to the committee so appointed their hearty encouragement in this not easy undertaking. Yours very respectfully,

MARMADUKE M. M. SLATTERY,
ALLAN V. GARRATT,
HENRY V. STANLEY.

Personally I would add but a word. Let us look at this question seriously, gentlemen, and not rise from this session, without having taken some decisive action.

Let us no longer oblige our working electricians to use a crooked yard stick of no particular length.

DISCUSSION OF WIRE GAUGE REPORT.

Dr. Moses—I am delighted to see that the matter has been referred to competent persons for consideration, and that they have embodied their ideas in such an elaborate and correct report. However, while making this change, let us be quite sure this time that we are getting something that is on the basis on which we want to calculate, that is, the resistance. That is the only element the electrician has to consider in regard to his wire. Let it be something that is interchangeable with everything else that is adopted as a scientific standard in electrical measurement. The centimetre-gramme-second is taken as the basis now of all calculations. Therefore, we should have a fraction of a centimetre as a measure. But let us rather consider length than cross-section; that is to say, if we take a unit of length—the metre or the millimetre, or what not—let it be a unit of length commensurate with those units that are now adopted, and we can then interchange every time without the frequent use of the extraction of the square root. As that is a matter which will require some deliberation, I think it would be well to refer this report for speedy action to the executive committee, who might act upon it. It is a step in the right direction. Now let us march on in the same direction.

The President—The committee has shown so much intelligence in its treatment of this subject, the report is so explicit and so straight, that it seems to me that it is the first committee that has fully discharged the duty imposed upon it by the association. It has convinced me that the first step to be taken is to undo the work which was done at the Baltimore convention; that leaves the field clear. The next thing is to continue this committee, add to it perhaps some more gentlemen, and then when the report goes out, members can read it and come to the next meeting fully prepared to discuss the question. Referring to the first recommendation of the committee, that the British standard no longer be recognized as the gauge of this association, the report of a committee recommendiug the adoption of the British standard was adopted. Now let us see if they have adopted it. Is there a man on this floor who has carried that out in practice? If he has, let us look at him. The reason why they did not do it is that it does not fill the bill. In the shops of the concern that I am connected with in Baltimore the wires have been ordered by thousandths of an inch. I believe that that is the best system in use to-day. If a better one is provided—and I believe this is a better one—then I will guarantee—I am speaking for myself, not the association—that we will drop the thousandths of an inch and accept the standard gauge. If the sixth recommendation of the report be carried out, it wil go a long way toward making this the universal gauge, because the place to start this business is with the manufacturer. If you get the body of wire manufacturers in this country to adopt a successful method of measuring the wire, and if they do what is laid out in that report—send out to the wire users this gauge together with an explanation of why it has been adopted—there is not one man in a thousand who will cavil at its adoption. We have never before had the ground to go upon so clearly defined and backed up by so cogent reasoning as in this report. So, in my mind, if you adopt this report and add two members to the committee, at the next meeting those who will find reasons to disagree with the report will have ample opportunity on the floor to undo anything which has been done, or suggest remedies for and defects which might occur to them in this matter.

Mr. Garratt—It occurs to me, in view of what you have said, that it would be wise to strike out that paragraph of my report in which it is suggested to authorize an electrotype of this new gauge and distribute it; and in its place I would suggest that the committee which may be appointed be authorized to print a hundred or two copies, and mail them to the leading wire users of the country, instead of going to the expense of having an electrotype made.

Mr. L. H. Weissleder said that it would be unfair to the committee to adopt this report, and then at the next semi-annual meeting have the chairman ask how many have adopted this gauge, and it would, therefore, be a good plan to have all the electric light companies pledge themselves to adopt this after a reasonable length of time, and in the meantime familiarize themselves with the new gauge, and the relation of the new to the old which they have discarded, and let the transition be gradual.

Mr. Eustis—I want to call attention to one thing in regard to wires, and that is that in the drawing of the fine sizes there is a film formed on the outside of the wire. Now, the resistance of that film may be different from the resistance of the core. Therefore, when you take any gauge which is measured on the diameter—which, I think, is the best way to measure it—your resistance, as so tabulated, is not accurate for the smaller wires. Another point I wanted to speak about is the difference between the British Association ohm and the legal ohm, as we have it here. There is quite a difference between the two. Another question is, getting the weight per mile of wire. For the unit of specific gravity we take exactly a cubic foot of water. I have found great difficulty in getting hold of the best authority for the determination of the weight of a cubic foot of water, and also the specific gravity of copper wire. The best authorities I have found seem to point to a specific gravity of $8\frac{9}{10}$. Some of the old tables were based on 8.879, although so much smaller; so that would be a point which ought to be determined, I think, before any definite standard is taken in regard to the weights.

Mr. Garratt—I intentionally left out of my report and my paper all considerations of the kind suggested, because I think the place for the discussion of those subjects is at the sessions of the committee. This is a business association, not a scientific body. Scientific questions are to be discussed by scientific people in their own meetings.

The President—Still, a reference by any member to such a subject can be carried away and used for the information of the committee. The suggestion made by Mr. Eustis is, I think, a very valuable one.

On motion of Mr. J. A. Powers, of Troy, it was agreed that four members should be added to the committee, and the president then appointed Messrs. Moses, Weeks, Keilholtz, and Eustis, in addition to the old committee, Messrs. Garratt, Slattery, and Stanley.

Mr. C. C. Haskins then read a paper entitled "For High Insulation." (See page 93.)

The discussion of Mr. Haskins' paper was postponed until after the recess, which was taken till 4 o'clock.

TUESDAY AFTERNOON SESSION.

On re-assembling at 4 o'clock the discussion of Mr. C. C. Haskins' paper was taken up.

Mr. F. A. Mason—In conversation with insurance inspectors I am continually met by questions of this sort: "We do not know much about wires or about insulation, and we want to know something, and we wish that there were something authoritative we could lean on. We cannot examine different insulations, we only guess at what is the proper insulation for us to pass." It would seem to me that this is the place and that this is the time for some authoritative statement to be made, and without following with any remarks of my own I wish to offer the following resolution:

Resolved, That a commission of five members of the National Electric Light Association be appointed whose duty shall be:

Digitized by Google

First. To determine what qualities are essential to good insulation for electric light wires.

Second. To examine such insulation as may be submitted to it and to determine in what degrees the different insulations submitted possess the virtues required.

Third. To report at the next meeting of the association the results of their investigation.

Mr. Steuart—I hope that these resolutions will be adopted, and a committee will be appointed to consider this question. It is one of the most important subjects connected with electric lighting that we have to deal with, as I had the honor to point out at the Detroit meeting as chairman of the legal committee. It has a very important bearing in consequence of the fact that the relations which exist between electric light companies and the public, and between electric light companies and insurance companies, are almost entirely due to the condition of these wires. The legal question as to whether an electric light company is responsible for the damage caused by fire or the damage caused by the loss of life, will be dependent upon the answer to this very question when a case comes to be tried for such an accident, should it occur, and the companies were to be brought into court under it. The condition of the wires will determine the question of the responsibility of the company, and if it be thoroughly proven that it was within the power of the company to have their wires in a perfectly good and safe condition, and it be further proven that they were not in that condition, and that the accident resulted from that cause, the electric light companies will be held in damages, and be made to pay them. Whether it be a loss from fire, or whether it be a loss of life, they will be held responsible for the damages, and they should be. Therefore, I think it is a very important matter for this committee to be appointed, and that this association should take broad and decided ground with reference to the character of the insulation, the insulators that should be used by its members, as well as by those who are outside. Give the insurance companies and give the public to understand that this association has taken a stand before them in which they pretend to say, and propose to say, that they are giving to it the right thing and that they are going to give the members the opportunity of having a committee determine whether they are doing the right thing. Then it will stand in a proper position before the public, and they will gain the confidence of the public. For that reason I think this committee should be appointed, and I think it will be.

Prof. Houston—I was not present at the meeting this morning when the paper under discussion was read. I simply rise to ask whether the discussion related entirely to the subject of insulation? It seems to me that an electric light wire to be safe should possess three properties. Unfortunately, the three properties would be very difficult to be found associated together in the same wire. It should not only possess high insulation, but it should be impervious to water or moisture, and should be incombustible. Whether or not these properties can all be found in one and the same conductor I am unable to say, but when the conductor is found that possesses this three-fold group of properties, I am sure the best conductor will be found for economy and safety in working. I simply rose to ask the question whether under the head of insulating power the other two equally important requisites, impermeability to water and incombustibility have been considered?

Mr. L. H. Weissleder—Before the subject shall receive the sanction of this association there should be an amendment. I think it would be a good thing to have it qualified, as under some circumstances there would be a great loss entailed in the rearrangement of wires and great loss to property, amounting to the confiscation of some plants running on a very small margin. And another thing; the gentleman who has just preceded me was speaking about insulators and a fire-proof covering at the same time. I might say that a wire thoroughly insulated does not affect the ground line or produce fire, because the fires produced have generally been in wet weather, and we have found in our own business in running into buildings, that sometimes the current would escape from the wet wood and produce a little conflagration and some damage. A great many complaints have arisen from this. A good many companies are equipped with good wires for ordinary weather, but if the wire were run against the iron cornice or a roof it might produce an escape and be unsafe to property, and manifestly a fire might occur.

Prof. Houston—It is true that a wire well insulated originally may from moisture become a source of danger from fire, and might not be the cause of fire itself. But it is not true that the wire is free from danger as an incendiary; that is, the covering acting as an incendiary. A very serious fire is likely to occur on the outside of the wire itself. Surely, in a practical meeting like this, it must be well known to members that there are wires which, if inclined upward a little and touched at one end by a match, will shoot forth a column of flame almost as rapidly as a man can walk; there comes the danger. When my duties led me to inspect the circuits at the International electrical exhibition, of which I was the electrician, I remember very distinctly that we had to guard very carefully against wires of a readily ignitable type, and many a time have I tested wires from which the flame would run from one end to the other almost as rapidly as a man would walk. The trouble with such wire would be less in danger from the current which traverses it than in carrying fire from one part of the building to another.

Mr. Callender—I move as an amendment to the resolution that the first and third objects be kept in view, and that the second be left out. It seems to me that the object of the committee should be to investigate the question of what insulation is necessary, and that it should not be to determine what kind of insulator should be used, any more than a committee should be appointed to examine into which kind of dynamo is best, or which kind of lamp should be used. The object of the inquiry is one of very great importance, and its importance is growing day by day and being recognized by electric light companies; if the second part be left out, it seems to me the resolution would then cover all the points that should be investigated by this association.

Mr. Mason—I introduced these resolutions at the suggestion of a number of insurance inspectors, who said that they were not able to determine these questions; they had not time to investigate; they were obliged to pass upon installations; they were obliged to say whether they would or would not pass and use certain wires, and it seems to me that it does lie in the purview of this association to determine what are the needed qualities in the first place. I do not need to go on and mention that there are other qualities not in the way in a good insulation, but the gentleman who spoke a few moments ago on the legal aspects of the question made a very comprehensive point. Those of us who own installations and who are connected with electric light companies wish to be protected and we are not protected to-day. I have the misfortune to be connected not alone with an electric lighting company, but also with a wire interest; but I speak now in connection with the first interest. We want to know whether we are protected against suits from telephone and telegraph companies and from private individuals if we have taken all due pains and precautions.

On being put to a vote Mr. Callender's amendment was lost and the original resolution carried.

The committee of five provided for in the resolution was then appointed by the chair, as follows: Prof. E. J. Houston, M. M. Garver, R. T. Robinson, Carl Hering, and Prof. W. D. Marks.

Mr. E. R. Weeks then read a paper on "Popular Prejudice Against Electric Light Wires." (See page 92.)

DISCUSSION.

The President—While Mr. Weeks was reading his paper, this question occurred to me. What makes cheap work possible? Two things, sharp competition and bad pay. When you put in the field in competition three or four electric lighting companies, instead of endeavoring to bring about a good service which will pay a fair profit, an effort is made in the direction of obtaining the contract at any price almost, whether there be profit in it or not. Now, what is the result? All this follows that Mr. Haskins suggests. Among well ordered electric light companies you will find that the cost of installation is much higher than those where helter-skelter methods were adopted in the early days of the business. They make the electric lights at the cost of 40 cents, and they are compelled to serve corporations because corporations will have electric lights. It has passed now beyond the point of experiment; it is recognized that electric lighting is the only method by which streets can be properly lighted; and the corporation seeks to get the lowest price without going into an intelligent examination of the details by which the company shall accomplish that lighting. Therefore, the company will offer to light the streets for 54 cents, and I think that they have offered lower than that when they knew, and we know, that it is impossible for them to make and deliver the light at 54 cents and receive any profit therefrom.

Not only do they lose the business themselves, but by this sort of competition they injure the business and the interest of the electric lighting companies who put up the capital and enter the business as a bona-fide industry in that locality. Now, there is a disease; I do not know the remedy. We have endeavored to apply it at every association meeting. So far as I have been able to see and recognize it, I have not only used this organization but other organizations to prevent this sort of work where I have been interested. The demand for cheap shoes gives rheumatism; the demand for cheap shoes gives people consumption, and the demand for this sort of thing where men are not judges of the quality of work, brings about all the evils of the commercial world, and brings about many of the evils for which you call the doctor, and many of the evils which call for you to bury the poor electric wires, when it is not the electric wires at all, but it is the parent company producing unfair competition in various localities.

The secretary then read a pamphlet prepared by Mr. S. E. Barton, of the New England Insurance Exchange, relating to the subject under discussion. The pamplet showed that when properly inspected, electric lighting plants are considered by the exchange the safest of all illumination.

Prof. Houston—Those of us who have traced the progress of

Digitized by Google

electric lighting, know that during almost every decade from some time in 1810 there had been the appearance of the electric light promised, and great things blossomed for awhile and drooped. But at this time we may say that electric lighting has come to stay. It has come to stay because to-day it stands without any rival as a general artificial illuminant. It is better because it is more like sunlight; it gives a more general illumination; it is less fatiguing to the eye; it is better from a hygienic standpoint; it does not poison the air of the rooms, and I take also the stand that it is better because it is more reliable and safer than any known illuminant. It is safer to both life and property. When we contrast the electric light with the old torch; when we contrast it with the tallow candle, the coal oil lamp and the gas jet which have successively replaced one another, I think that we can all agree that, contrasted with them, it stands number one, head and shoulders above any one of them on the score of safety to both life and property. Our insurance friends will correct me if I am wrong when I say that the friction match which the electric light entirely replaces, or the uncovered gas jet, or the explosive and easily overturned coal oil lamp have been a greater destruction to both life and property during the last year than the electric light; and yet the electric light is a child of comparatively few years of age, and other systems of artificial illuminations, have been in use for a long time. Of course we must recognize that the electric light possesses dangers; that it will kill if one is stupid enough to permit the current to pass through his body. It will also ignite combustible materials if it is improperly placed. But I assert, and I think you will all agree with me, that there is no necessity in properly constructed systems of electric lighting, of either the people taking the current through their bodies or of combustible materials coming within reach of the electric currents. I know from practical experience that electric lighting can be made safe. This was tested and exemplified at the International electrical exhibition. We did not adopt the rigid rules adopted in England, and yet in a frame building we had innumerable circuits containing three thousand volts of electromotive force, and thronged with visitors, and neither was the building burned nor was there any loss of life. So we can testify that the electric light is safe. I think we should insist upon the fullest degree of inspection that our insurance friends can ask, as it is our only safety. We are not running a system that we need fear the most careful inspection of, if we only could agree among ourselves to put in the very best work, use only the very best materials, adopt freely all the well-known and well-tried danger preventives, either from fire or from loss of life, and then I do not think we need fear what the future may have in store for us. I do not think by any means that the dangers will be all removed when the electric wires are all put underground. On the contrary, as the result of very careful thought, I am confident that the time will come when from expansion or leakage, oxidation or an earthquake, or when the sewer gas escapes, and this will always take place more or less, and you cannot keep it out, then it will inevitably some day bring about contacts, and then they will be contacts of the most glorious character! Contacts that may at a moment reach different and widely separated parts of the city and place them in danger. I do not think that the problem is going to be solved as easily as many of our friends seem to think. Out of sight, out of mind. Therefore, I cannot agree with the conclusions when it is urged or hoped that the time will come when all the wires will be underground. I suppose the time will came, and must come necessarily, when all the electric wires will go underground, but I do not think anything has been shown of a scientific character which proves that the system has been perfected whereby we can safely go underground. It seems to me that it cannot be successfully done with a conduit, but you must have a subway. When you have that, the question of the underground wires will be settled. I only wish to say one thing else. It has often been remarked by people coming from England and other countries, that America had made great progress in lighting, more, probably, than any other country in the world, and it is for the very simple reason that, thus far, the electric lighting companies have been let alone and have not had their hands tied, and restrictions have not been thrown around them. But if the laws which prevail in England in reference to the matter are enforced here, then the progress of arc lighting in this country will be barred. I cannot agree with the statement as to its being unquestionably true that converters are necessarily dangerous; or that high tension electric light circuits are necessarily dangerous. They are more dangerous than others unquestionably; the question is whether they can be so regulated, whether such safeguards can be thrown around them as will render it advisable for us to use them. I think such safeguards can be. Now, only one other point; if a law should be attempted to be passed in this country limiting the electromotive force to two or three hundred volts, on the score that a higher electromotive force than that would be dangerous to life, I think we all ought to be ready to answer that question, which seems to be a very difficult one for people who wish to introduce such restrictions to answer. And that is, I doubt very much whether a person taking the electric light current is killed as a result of the current normally generated by the machine passing through his body, but that which kills him is most probably the spark produced on breaking the current contact. Again and again we read of people who turn pale, shiver and all that, and then at the moment the wire is broken falldown as dead. Why? Because if a machine capable of giving only a few hundred volts has the circuit suddenly broken, there is produced a current of several thousand volts. If that be true you do not gain any advantage when you limit the electromotive force to 200 volts. You do not make it perfectly safe, but of course it is safer than otherwise.

Dr. Moses drew attention to the fact that provision ought to be made by which a 32 c. p. lamp could not possibly be put in a 16 c. p. lamp socket, as the increased current would heat the wires dangerously. The remedy would be to put a safety catch in each lamp socket.

The president then announced the subject for the next day's meeting, and the convention adjourned for the day.

During the session a letter of invitation was read from Dr. W. H. Wahl, secretary of the Franklin Institute, asking the members of the association to attend its regular monthly meeting on the following evening, and on motion of Dr. Moses, the invitation was accepted.

Mr. De Camp also invited the members to visit the Brush Electric Light station of Philadelphia.

WEDNESDAY MORNING SESSION.

After the convention had been called to order, the secretary read a communication from the Electric Club, of New York, stating that the following resolution had been adopted by the club.

Resolved, That the president of this club appoint a committee of five, including the president, to confer with the committee that may be appointed by the National Electric Light Association, to consider the question of uniform rules and regulations to govern the installation of electric light plants; that these committees be requested to confer with the representative underwriters, and that they be solicited to take measures authorizing the appointment of a committee for the consideration of this matter with the committees above named, and that a report will be expected from this committee at the next regular meeting of the club, March 3.

The following committee had been appointed by the club: Mr. Geo. W. Hebard, president of the United States Electric Lighting Company; Mr. Geo. W. Stockly, president of the Brush company; Mr. T. A. Edison, of the Edison company; Mr. N. T. Pulsifer, of the Mather Electric company, and the president of the Electric Club, Mr. H. C. Davis, of the Sawyer-Man company.

The communication was referred to the committee named in Tuesday's report—Professor Houston, president.

Mr. Steuart, chairman of the legal committee, submitted a report on "Reforms in the Patent System." (See page 89).

Mr. Steuart read a telegram from the Hon. M. V. Montgomery, commissioner of patents, expressing that official's regret at being unable to be present.

A letter was read from the Edgerton Motor company, inviting the members of the convention to visit the establishment of the company.

Mr. J. H. Shay then read a paper on the "Transmission of Power by Belting."

Mr. Shay strongly advocated leather belting, and said: The verdict of the mechanical engineer everywhere when called to sit in judgment on this question is the same, "there is nothing like leather."

Yet there are as many kinds and forms of leather as there are of nearly any other animal product, and while for some purposes we know other leathers are better suited, the fact is undeniable that for strength, durability, ease of repair, and adhesion, oak-tanned leather stands superior to any others on all occasions. The first essential is found in the character of the hide; due care must be exercised in the tannage, and a thorough and careful selection of hides must be made to insure evenness of stock. Without particular pains in this last requisite, uniformity in the belt is impossible. Or the stock must be reduced to a uniform thickness by splitting, which introduces another fault, weakness, and consequent want of durability. Having now arrived at the point when the properly selected, tanned and sorted stock is ready for cutting and splicing, we have to decide which of several methods is best for attaching the various lengths to form a continuous belt. There are, as I have intimated, several methods of attaching these: by thongs of lace leather; by wire hooks; by rivets and burrs, and finally by scarfing and lapping—the two scarfed surfaces being cemented under pressure. This has been adopted quite generally by western manufacturers, and any objection to such joints which may have formerly existed are now set at rest forever through the use of more recent methods and materials. There are objections to the three methods first mentioned which are at once simple and damaging, from a mechanical point of view. It goes without saying that a belt punched full of holes for either lacing, hooks, rivets, or any other appliances for fastening is weakest at those splices, instead of being strongest. And again, any inequality,

Digitized by Google

such as must necessarily arise from any one of these fastenings, must result in undue strain on the belt, must give rise to a slapping motion, and thereby reduce the useful work of the power. We may find a still more serious objection further along.

Belting for electric light machinery, to be a success, must have characteristics not necessarily found in belting for other purposes. For ordinary machinery for sawing, turning, planing, etc., there is not the positive necessity for steady motion which must exist in an electric light belt to secure satisfactory results. Perfectly uniform motion, other things being equal, means steady, even, electrical force; and this, as I understand it, means uniform, steady light. Uniformity of belt must exist throughout its entire length, not only at the portion between laps, but in the laps themselves. The presence of anything which will increase the weight or thickness of the belt at the lap is no worse than at any other point, nor any less mischievous. No engineer would consider it an advantage to have the driving pulley out of true a quarter of an inch on one side, and yet this would have probably no worse effect upon the uniformity of the dynamo movement than an additional thickness at the laps of the belt.

Another cause of irregular motion may be found in a slipping belt. A certain amount of suction (of the power known among engineers as vacuum pressure), which, of course, means atmospheric pressure, is a positive necessity to hold the belt in place, and so make it pull uniformly. The more closely the belt hugs the driving pulley, of course, the more perfectly and quietly does it accomplish the end sought. Now, it takes but little thought to comprehend that a belt which is lifted from the pulley every four or five feet, allowing the air to enter the space between the belt and pulley, can only produce unsatisfactory results. Experience has demonstrated that the most perfect remedy for all this irregular action, from any of the causes mentioned, is in such a union of the laps as is produced by a scarfed joint, simply relying upon the cement, discarding rivets, pegs, wire, or any other form of fastening. To accomplish these results, there is still one vital qualification necessary which I have not mentioned. Unless the belt has been properly stretched in the manufacture, the hard, rapid pull of the dynamo work will soon render it necessary to take out the slack. This should not be.

Of the care of belting in use, a few words may not be out of place. The saturating of belting by any kind of oil is destructive. Belting stock, properly prepared, needs occasionally simply a slight coating on the grain. The dressings ordinarily offered in the market for this purpose are destructive. They are mostly of the mineral oil variety and contain more or less of those light products of distillation known as naphtha, benzine, etc., and combine readily with many vegetable and animal products, and tend to destroy their integrity.

Mr. Garratt offered the following resolution:

Resolved, That the committee on insulation be instructed not to confine their labors to the question of insulated covering for wires, but to treat the question broadly, and that at the next semi-annual convention they embody in their report a thorough treatment of the problems involved in the setting of dynamos, converters, etc., and such allied information as may seem to them appropriate. Adopted.

The president thought it would be well to change the title of that committee, and that it ought to be the proper insulation of wire and the proper installation and construction of plants.

It was agreed that that would be the title of the committee.

A resolution was adopted that a committee of three be appointed to revise and amend the by-laws, and report the same at the next meeting of the committee in August.

The secretary then read a paper by Mr. Wm. Baxter, Jr., on "Electric Motors." (See page 99.)

DISCUSSION.

Prof. Edgerton—In the paper we have just heard read, there is a suggestion which it seems to me should occupy the attention of the convention, and that is, in regard to the cost of supplying the electric current for motor purposes. What is wanted is to know whether there is going to be a large demand. If there is going to be a demand, and if it is to be permanent, I do not think there is one of you but will at once prepare for the work. Now, judging from the correspondence we have, and if we look over the field, I do not believe any man can shut his eyes to the fact that where one customer will use electric light, ten men—yes, a hundred men—will use electric power. I want to suggest that this convention appoint a committee to take in hand the matter of the price of furnishing current by the electric light people, and to prepare a list or scale of prices that would be mutually satisfactory, the committee to offer it at our next meeting.

Mr. DeCamp thought the suggestion a good one, and stated that the price they were getting for motor service in Philadelphia was 65 per cent. of that for electric light. They had no definite data to go on, but were charging at the rate of $5 per month for small sewing machine motors.

Mr. Duncan said he had had some little experience in the distribution of power with motors. They were running in Pittsburg altogether sixteen motors varying in size from a half to ten horse-power. These motors were all running with one exception upon the incandescent current. The question as to the relative cost of light service and power service was not sufficiently advanced for definite and equitable settlement. He had no hesitation in stating for the information of the association that he could obtain from the distribution of power twice as much as he could for light. They had no difficulty in placing these motors at all. The demand came to them, they did not go after it. Furthermore, the satisfaction obtained was such that they had on record in their office statements to this effect; parties who have used these motors for six months, as against steam or gas power, would be willing to pay 25 per cent. more for the electric service. Of course, that was gratuitous on their part, for he should certainly ask them next year to step up instead of down.

As regarded the maintenance of motors and the amount of service required to keep them in order he would say that as far as he could see, and as compared with an arc system, the motor requires no particular attention at all. An arc light did require particular attention, and from his experience he would say that the carbon trimmer, after a little training of a week with a motor in the shop, could, if he were at all a competent man, make a round to all the motors in service and keep them running. In Pittsburg they simply made a round twice a week to every motor in service. The man made a report. It formed part of his duties, the same as his carbon setting and the report on his lamps. He could not see why, where a light station was properly equipped for doing business, there should be any increase of force or attendance necessary, whatever, for the distribution of power, say up to 100 motors in service. That was, where the district was already covered by the light wires. I think we have arrived at that point where we can safely say that in large cities the distribution of power by means of electricity is one that will pay to run either as a separate plant or in connection with the lighting business. It is simply a question whether the lighting people are going to keep that business to themselves or whether they are going to allow somebody else to step in and take it as a separate business. In regard to the amount of investment and the relative cost, I would simply say that after we had placed four or five motors we arrived at the conclusion that it would be a very good thing for the customer to buy the motor—in other words, it would be a very good thing to have the customer interested in the business. I may say that so far the majority of our motors are owned by the subscribers, and that one person in the employ of each concern gives an eye to the motor. We make the inspection, and see that they do not crowd on more work than we guarantee when we make the bargain.

President Morrison pointed out the impossibility of having steam power so arranged as to be distributed in localities in large cities where rents are low, and where the small manufacturers, which it is the policy of municipal legislation to encourage, could be established, if the power to operate them could be obtained. Electric motors provide the means of supplying this want. He continued: I do not think that any of us have gone sufficiently into this question to be able to say whether the motor business is or is not desirable simply as an adjunct to electric lighting. I do not believe that that question can be solved except by practical work. The nearest thing to practical work that you have heard so far is the report of Mr. Duncan, of Pittsburg. He tells you that the result has been a profit to his company, and he stands a living witness to the profitableness of the motor business. With the present outlook, I believe the report of the investigators in that field to be in favor of the adoption of motors as the proper method of distributing power.

Mr. Upton said that in Boston, the motor subject had been satisfactorily taken up and dealt with. The Edison station there had motors aggregating 300 h. p. at work. It had proved a valuable addition to the economy of that station. He believed that all central lighting stations should put in motors. The additional cost was small; in some cases running all the time it was simply the cost of the coal used, with possibly the wages of a few inspectors. In fact, the whole question had been satisfactorily settled in Boston, where they were running elevators two miles from the station, both passenger and freight, with most perfect success.

Mr. Harding stated that in Boston they were getting $125 per horse-power per year for a day of 10 hours. They preferred the contract system as the only sensible one to use with the supply of intermittent power. Another point he would insist on strongly was, to sell the motors and not to rent them. They had sold every motor they had put out in the city of Boston. As a result, the customer took excellent care of the motor. When the motor was placed in a shop, a good reliable man was selected to take charge of it there, fill the oil cups, start it in the morning, etc. Then they had an inspector who went round at certain intervals to see that everything was all right. Another point was, not to have the motor overloaded. In Boston with about 40 or 50 motors they were deriving an income which was paying the local Edison company on its total original capital of $100,000, eight per cent. from power alone. Every day men were coming to the motor company wanting to buy motors. The motors were now called for in very much larger sizes, at present more 10 h. p. than any others, but 15 and 20 were in demand. These motors

Digitized by Google

had a guaranteed efficiency of 80 per cent., and the horse-power was guaranteed. They were now running the largest elevator in Boston, a freight elevator 12 feet long, 6 feet across, going 60 feet a minute. They were also running a passenger elevator going 100 feet a minute, and both were run from the same motor of about 15 h. p. A large proportion of the business was elevator work in the wholesale part of the city. About half-past 4 it was almost entirely deserted, and so the power business began to go off as the lighting came on. The circuit upon which motors were running in the day ran light also.

Mr. Morrison—That is the secret. Nearly every station is now running a day circuit which is not loaded to its full capacity.

Mr. Kerr held that only when the incandescent wires embraced the residence portion of a city would they be able to sell much beyond their actual capacity. For instance, in one town where the total call for incandescents would be 7,000 lights, the business portion took only 400 lights. Now, when they got the 7,000 lights, including the big residential area, they could rent power or light far above the station capacity. Companies that went out into residence districts found that they did not have to increase their stations so rapidly as their rented capacity would indicate. He knew stations in this way running 1,300, 1,400 and 1,500 lights from two 500 light machines, because there, if a man went to the church, theatre or hall, he didn't burn his light at home, and if all the lights were going in one house, it was because a party was going on there while all the lights in the neighboring houses were turned off, the people being at the party.

Mr. Duncan and Mr. Kerr agreed that as for instance in Pittsburg, 33 per cent. might be figured on as the excess margin that could be contracted for.

Mr. Garratt took exception to Mr. Baxter's point as to the greater cost of zinc as a fuel than coal. A good engine would not show on the pulley more than 13 per cent. of the energy in the coal burned under the boiler, so that the difference was not so great as might appear. While no man in his senses would claim that zinc was a cheaper fuel than coal to burn, there were occasions when zinc had a special use and place. He instanced a case in Boston where he furnished a motor with battery for a store. He had charged the parties a good rate for it, but they sent back, wanted to know the price for the whole, and bought it outright. Evidently there was a use for zinc as fuel.

Mr. R. T. McDonald—One thing I want to call attention to in connection with motors. We are all in the electric lighting business to make money, and the tendency in lighting has been to get prices too low. I understand it is proposed to appoint a committee to fix prices which are to be charged for motor service, and in that connection something has been said in regard to the proportion of motor rates to light rates. In some places these rates are fair, in others ruinously low. The price to be charged for motors ought to be on the basis of the cost of coal, instead of the rates charged for light.

Mr. DeCamp stated that they rented one man five motors and charged him as usual, $6 for them. They rented another man ten motors and charged him $11. The man with the ten motors gave up business or moved, and sold them to the man with five. That man threw them all in together and thus ran them a couple of months, paying $6 for the service of the fifteen. That was, perhaps, to be met by cutting out automatically when any excess was thus taken.

Mr. R. W. Pope—A similar difficulty was obviated by the Gold and Stock Telegraph Co., in New York, originally by charging the subscriber $100 for installing the quotation instrument. It was understood in the lease that this did not give him the ownership of the machine. He had the privilege of having the machine, but if he gave up business, he could not take the machine with him. The company retained the machine, also the hundred dollars. The original subscriber retained his privilege of leasing the machine. If he could find another party desirous of taking the machine, he could make a "dicker" with him. It was practical ownership, but the company thus controlled the property at all times.

It was decided to consider the motor rate proposition at the afternoon session.

WEDNESDAY AFTERNOON SESSION.

Mr. Henry Hine offered the following resolution.

Resolved, First—That the report of the legal committee be referred to a committee of five, to be called "the Committee on Patent Legislation."

Second—That it shall be the duty of this committee to carefully consider the report and proposed bill, formulate a plan for the presentation of this matter to Congress, and report at the next session of this association. Adopted.

Mr. A. F. Upton read a paper on "Plans for Installing Central Stations." He showed plans of the Boston Edison station. The *Electrical World* also presented a large 8 page folder, giving views of about a dozen stations in America and Europe, showing great difference in system of construction and equipment. Mr. Upton urged substantial equipment and economical methods of producing steam power. He said:

In starting a central station, the first matter to decide upon, is a proper location; and this requires the consideration of a number of important questions, among which are, convenience for coal and water supply, and a location central to the lighting area.

The site having been determined upon, the next question to be considered is the character of the building; brick would of course be preferable for both the boiler house and machinery building, but ordinarily the engine and dynamo rooms are constructed of wood and the boiler house of brick;—in either case allowance should be made for increase of plant in the primary structures and also sufficient land for increase of station buildings—for the inevitable necessity of this electric lighting business is to increase the plant, and the great mistake made by the pioneers of the industry has been in not allowing for this increase.

Size of buildings must be governed to a certain extent by the size of the city or town in which the station is to be located, but for an ordinary plant we find the following dimensions well adapted for the purpose; and our company has recently erected a station of these dimensions which is spoken of as a model plant.

The main building is of wood, two stories in height, with brick wall next to boiler house, and is 80 feet long by 36 feet wide; the dynamo and engine room is 16 feet in height in the clear, and the upper story (14 feet in the clear), is arranged to let power for manufacturing purposes if desired.

The boiler house is of brick, 40 feet by 40 feet, and 20 feet in height, allowing of nearly 10 feet between the boilers and roof, and in addition there is a large ventilator in the roof.

This plant starts with one tubular boiler, six feet by 16 feet, with ample room for two more of same size, and with proper passages at sides and rear of the boilers, and a 16 foot firing space in front, well paved with brick.

For a chimney they use an iron stack, 70 feet in height, 42 inches in diameter at the base and enlarging to 48 inches at the top; this stack being of size sufficient for another boiler.

They have one high speed engine, belting direct to the dynamos (one belt from each pulley of the engine), and with room for five more, which will be put in as needed.

This plant is arranged for both arc and incandescent lighting, also to furnish power for an electric railway, and when fully equipped, will easily develop 400 h. p. There is also land sufficient to duplicate this plant.

Starting on the basis that the manufacture or production of electric lights was, in reality merely selling power, we made it our aim to equip these electric lighting stations to use such apparatus and fuel as would obtain the greatest amount of steam at the least possible cost; and to avoid as far as possible, all loss between the boilers and dynamos.

The tubular boiler seems to be the standard among the electric stations, though many of the sectional boilers, especially the modern ones, have advantages well worthy of consideration. On the basis of tubular boilers, we say without reserve, to put in steel every time—don't be satisfied with homogeneous steel which can cover anything known as steel—but have specifications on flange, or better still, on fire-box steel of some good brand; for the heads, use flange steel. Don't put in a small boiler; a good six foot tubular costs but little more, takes up but a little more room, and the setting is but slightly more expensive than a five foot, while the capacity is almost double. In putting in the foundations of the boiler-setting, put them in for two boilers; they will be needed later, and such work is inconvenient when running a station.

In setting the first boiler, build one outside wall as the middle wall for a second boiler; it is also wisdom to put in an iron stack (if iron is used) large enough for two boilers, and the first cost of a pump heater, and injector large enough for two boilers is but little more than for one.

For feeding the boilers we advise using both a pump and injector, using the pump in connection with a heater when the engine is running, and having the injector as a reserve feed, also to use to furnish the boiler with hot water in case the engine is not running.

The subject of combustion of fuel is of sufficient importance among the electric light people to merit a few general remarks on the matter, and it is a subject that is far less understood by steam users than any one would suppose, considering the cost of the fuel consumed in making the steam in this country, and the following facts should interest all parties using steam power.

1st. That coal is distilled into gas before it can be properly burned.

2d. That to burn this gas, a sufficient supply of hot air must be introduced at a temperature not low enough to cool the gases below their igniting point.

3d. Every time a lot of fresh coal is thrown on the fire a great production of gas occurs, and if it is to burn to a flame it must have a corresponding supply of hot air. After a time, when the mass of fuel has become red hot, the supply of gas is greatly diminished, but at first the evolution of gas actually checks the draught;—but bear in mind that, although no smoke may be visible from the fire, it by no means follows that its combustion is perfect; if you diminish the supply of hot air, or reduce the air

Digitized by Google

space of your grate bars, you will be merely distilling carbonic oxide gas up the chimney.

4th. In ordinary boiler furnaces there is an insufficient supply of air; fresh coal is put on the grates and the firing doors are closed—gas is being distilled from this coal. Now, if you do not furnish air above the fire (and it must be hot enough to ignite the gas), how can you expect to get combustion? Whether it is expected or not it does not properly burn, and your boiler furnace is nothing more than as a gas retort in a gas works—making crude gas and wasting it up the chimney; in other words, a first-class soot and smoke factory.

Mr. Upton exhibited a number of blue prints showing the fitting up of the Edison Central Station at Boston, offering copies to any members desiring them.

The following resolution was next presented by Mr. De Camp.

Resolved, That the chair appoint a committee of five having experience in operating motors from central stations to tabulate rates for motor service, their report to be upon the basis of the price received for arc and incandescent light service, and that the report be received and considered by the next meeting of the association.

Mr. Duncan—I would suggest that it would be well to confine it to stations operating not less than 300 horse-power. I offer that as amendment.

The amendment was accepted and the resolution adopted.

The President announced as a committee on the report of the chairman of the law department, Mr. Arthur Steuart, Mr. Kerr, Mr. Ridlon, Mr. Sprague, and Mr. Morrison.

The President introduced Mr. F. J. Sprague, of New York, who addressed the convention on the subject of "Electric Motors." (See page 96.)

Mr. Sprague said, on concluding, he would be glad to answer any questions members of the convention might ask.

Dr. Moses—Will you be so kind as to tell us something about the cost of motive power?

Mr. Sprague—It is plain that in New York city the New York Steam Company is furnishing power to 435 engines. That power is supplied from a big steam station in Greenwich street. The conductors or pipes used for conveying the steam are, of course, of very large dimensions. The steam when delivered to the engine is wet steam, and the pressure is about 80, or possibly 90 pounds. There is one point of great advantage in the electrical transmission of power, in that you can work at so much higher electrical pressure than you can steam pressure. Then, again, the cost of conductors for electrical transmission is very much less than the cost of conductors for the transmission of steam, and you have not the objectionable element of wet steam. Yet here is the fact that the steam company is furnishing 435 engines with power and is making money. The consumers find it cheaper than they can generate their own steam. We found it necessary in dealing with the various light companies to have certain facts in our possession as to what we could do if we had 500 or 1,000 h. p. in a central station, as to how much power we could contract to deliver, and how much could we get for it. The manager of the Edison Central Station, in Pearl street, New York, insisted that the meter was the proper means of determining what must be paid for power. If a man uses his motor, the meter registers against him. This was done on our motors. He charged 1⅘ cents per ampere hour, and he thought he was going to have a bonanza. And so he would have had if the motors had not been automatic. After four or five months' running, we went to these people and asked them to let us see copies of their bills. We found some curious facts. I will cite one instance as showing the economy of the transmission of power by electricity:

There is a firm of chemical dealers, James L. Morgan & Co., No. 47 Fulton street, New York, who are running a freight elevator. They have a 3 h. p. motor working up to 4½ h. p. capacity. Their bills average about $12.50 per month; that is $150 per year. Had that motor been used, not up to 4½ h. p. capacity, but simply to its normal capacity of 3 h. p., steadily 10 hours a day, their bills would have been about $1,200 a year. So you see the average percentage of the time for which they use the motor is less than 15 per cent.

There you have an example of a motor, the people using it as they please, as many hours a day as they please, and they find by their meter bills that they only use that motor to 15 per cent. of its capacity. Now, we took a great many of these cases, printing offices and burnishing machines, etc., sometimes where they ran continuously and where we knew the machine was oftentimes overloaded, and we found this simple fact, viz., that with the whole capacity of motors, they average not over 33 per cent. of their capacity. In no case did we find, where they used the motor without any let up, that their bill was more than 51 per cent. of the capacity of the motor.

Mr. De Camp—Will you allow me to ask you as to the distribution of the business? Was it distributed among the class of people making up the general community?

Mr. Sprague—Yes, sir.

Mr. De Camp—How many users did it cover?

Mr. Sprague—I do not know; but it is a thing which holds, no matter how many we take. We took specimen classes of work, that is, elevators and burnishing machines, and work of that kind. All our records, however, go to show that motors, as a rule, do not average over 33 per cent. of their capacity for the 10 hours of a working day. This, in fact, is a large average. This may to a great extent be understood from the following statements: A motor is absolutely automatic. The total current used in machines of high efficiency is almost directly proportional to the work done at any instant. The result is that if the work slacks for a moment so also does the current. Almost all work is spasmodic in character. Motors have to be put in for their maximum capacity, but not one class of work out of a hundred, with the exception of ventilation, offers continuous duty. Some motors are stopped, and in others which are running the work is constantly varying from the maximum to the minimum. An illustration of this may be cited in the case of elevators. If twenty elevators, each requiring a maximum of five horse-power, were driven from the same line of counter-shafting, they would not require an engine of over forty horse-power, because some would be going up, some going down, others standing still, and in not two cases out of the twenty would simultaneous trips be made, while in not one trip in five-hundred would an elevator be hoisting its maximum load from the basement to the loft. Comparison also may be made with existing incandescent light plants. Practical experience shows that not over 55 or 60 per cent. of the total number of lights in use in a station are used at any one time, although it is possible to use them all. But incandescent lamps when they are in use take their full amount of current. Not so with motors. A certain percentage of the motors, just as with the lights, would not be in use at all, and in most of those in use the current would be continually varying, just as if the lights of an incandescent light station were being turned up and down from one to sixteen candle power, as well as many of them being turned out. The recovery in an ordinary district with 88 to 90 per cent. of the power delivered to the dynamo pulleys converted into electricity on the line and 10 per cent. loss in distribution is about 65 per cent. This 65 per cent. however, where the work is distributed, is only 33 per cent. of the capacity of the motors for which power can be contracted. In other words, for every 100 horse-power in a central station, 65 horse-power at any one instant can be delivered under an ordinary distribution, and this 65 per cent. is only one-third of the power which can be contracted for provided there are a large number of motors in use. Of course where only one motor can be used, then 65 horse-power only would be obtained, but the object of the central station is to take advantage of all the falling off of work, and that it can be done is shown by the records which we have of a large number of motors in use. The question then for central station managers is not how much can they afford to supply one, two or twenty horse-power in a single instance, assuming that to be the only power delivered; but for how much they can afford to deliver power provided, the full capacity of a certain engine is taken up by a number of motors.

The introduction of the electrical transmission of power into Boston was accomplished by the personal efforts of the president of our company, myself and our agents. The Boston company were not required to take any steps except to run their wires. We agreed to pay them $125 a horse-power per year—a pretty good price for us to make a contract for. The steam power actually costs the company about $30 to $35. Mr. Harding, then our New England agent, and now our general agent, started out to rent motors, charging $150 a year for horse-power. He pretty soon made up his mind that he would *sell* the motors. Every one put in during the past three months, has been sold. In that one station there are nearly fifty people owning motors varying from ½ to 15 horpe-power. That shows we have passed the experimental stage. We are no longer dealing with toys or theories. We are dealing with the commercial exploitation of the transmission of power. In New York city we are going to introduce motors to run the largest Hoe printing presses. We are going to prove that in dealing with these large powers we can do it more economically than it can be done by steam engines.

Mr. De Camp—Do I understand that in case I had 100 horse-power in my mill it could be furnished cheaper from an electric motor than it can be furnished by steam?

Mr. Sprague—Yes, if you are running in connection with a central station. Large engines can be operated and large powers developed under as little general supervision as smaller powers, and under far less supervision than several units of smaller powers. The cost of such generation of power is much less in larger engines, both in the amount of coal and water used and in the matter of attendance, and also in the general expense. It follows, then, that if the power of a manufacturing district can be centralized, it can be developed at a much higher efficiency and at a very much lower cost than where it is being generated in a large number of units. If, now, this power can be sent out or distributed to a large number of users in the district, then, supposing that only the same amount of power is sold as is generated in the central station, this plan of generating power would still have the advantage in point of economy. But when it is taken into

Digitized by Google

account, as has been shown, that where power is distributed to a large number of users from a central station, this station can take advantage of the very large falling off in the use of machines, it at once becomes apparent that if the system is properly constructed and operated, there is not only not a loss, but a great gain, in the centralization of steam power, and this will hold true whether dealing with a central station of 100 or 10,000 herse-power.

Mr. Ridlon—Mr. Sprague, do you think it is possible with a water power of 700 horses that is a mile away from a mill to generate 150 or 200 horse-power as cheaply as by steam?

Mr. Sprague—Yes. Of course the original investment would be more, because you would have to put in a generating station. Water power is not the most reliable thing in the world; I would rather depend upon steam. It is a question of cheap fuel. Get as much money for power with the least possible expenditure. Water power is all right provided you have plenty of it. I am going to start a central station in New York (provided the three-headed commission we have there will allow me) of 500 or 600 horse-power and working at 400 volts electromotive force, and then you will see the truth of what I tell you.

Mr. Rhodes—Is it possible to transmit water power to a distance say, of 10, 15 or 25 miles?

Mr. Sprague—Yes, sir. There is this element to consider in the transmission of power; it is just as practical a question as the transmission of energy by any other means. The moment that tne interest on your plant and the depreciation and the cost of operating exceed or equal the cost of production in the central station, just that moment do you want to drop the transmission of power.

That is, in other words, if you want to go from A to B, and that is a distance, say, of two miles, you can transmit that at a certain pressure and a given investment. If you want to go ten miles, then the question comes in, will my investment and the depreciation cost me more than if I generated my power at that point, no matter whether it is by steam or water. I know there is a great deal of talk about transmitting the power of Niagara Falls to New York city. It never will be done. The transmission of power even ten miles will not pay except in special cases, as coal is too cheap.

As an instance of the tremendous field which opens for special work, I will mention one case in which we have submitted an estimate for transmitting 200 horse-power over sixteen miles, and we have been asked to consider, also, a proposition for transmitting 600 horse-power twenty-two miles. In these cases the investment, of course, is very large. It is necessary to work with very high electromotive forces; but as to the commercial value of such transmission, you may judge from these facts: In the case where the 200 horse-power is desired to be transmitted sixteen miles they are now operating a 100 horse-power engine to supply power in three or four levels down in the mine. They do not receive over 40 to 45 horse-power. Coal of a poor quality costs about $22 a ton, and wood costs $11 a cord. It costs about $150 a day of twenty-four hours to operate this 100 horse-power engine from which only 40 horse-power is received. Sixteen miles away an ample water power is found in a river running down the side of the mountain. Here is a special case where the transmission of power, even with a very large investment, would result in a great saving.

Mr. Weissleder—How about running a street railway where the conductors are six, eight or ten miles long?

Mr. Sprague—We have to work at a potential of four, five or sometimes six hundred volts to get the highest economy in the transmission.

Dr. Moses—In running your motors at this very high electromotive force, do you feel perfectly confident as to the vitality of the machine?

Mr. Sprague—There is a limit to the electromotive force which you can use. In going to 7,000 volts I think M. Deprez has exceeded the commercial limit. All things being considered, I think 3,000 volts sufficiently high.

Mr. Ridlon—Would it be any better to use an alternating current than a constant current; the regular arc current of to-day?

Mr. Sprague—While I believe it is possible to run motors on alternating currents, I have not gone far enough into that to state what the results have been.

A number of questions were put to Mr. Sprague, which were finally summarized by Mr. Morrison as follows: It is not the intention of any of those present to discuss the motor business as a business exclusively. The question is whether they can take any part of the motor business at a profit, their business being arc lighting. Now, having a surplus of power, can that power be utilized at a profit to arc light companies? They do not propose to buy any more machinery; they do not propose to build additional lines, but to utilize the dynamos they have and to utilize the power they have.

Mr. Sprague—Unquestionably they could do that, but that limits their capacity, and it makes the motor business simply an adjunct to electric lighting. Now, that is the great fault with many Edison stations I have had to deal with, making the motor business an adjunct to the electric lighting business. If one station I have in mind had taken the capacity of their station a few weeks ago, and run it for motors, they would get double the amount they are getting for light to-day.

Mr. Powers, of Troy, N. Y., stated that he had started a separate circuit from an arc station for the purpose of supplying motors. A very large proportion of the power they would have to supply would be from 5 horse down. The difficulty they would meet is how to reconcile the first cost, if small motors be used in parallel distribution on a 600 volt constant potential circuit.

Mr. Sprague stated that with the distances in Troy 600 volts was unnecessarily high. Under suitable electromotive force the constant potential circuit would be found to be the cheaper. He said that he was considering the question of large powers and large areas, and that he was not content to deal exclusively with small powers.

Mr. Law—This motor question resolves itself into this: A majority of those here are placed in this position. We have a certain number of arc circuits up; these circuits are not full of lights. We are not allowed by the laws of the city to place any more wires on the street. Now, the question is, Is it going to pay us to put in motors or not?

Mr. Sprague—Unquestionably, yes; put all the motors you can on your circuits; the best motors you can get.

A Member—You say you are running them on incandescent circuits in New York? What effect have they on the lights, and have you any system of regulation for maintaining constant speed.

Mr. Sprague—As we are building our standard machines, they will run at the same speed, that is within one per cent., under all loads up to the maximum. The machines are absolutely automatic, Not only that, but we have machines which run on a potential varying from 180 to 220 volts; that is, on a variable constant potential circuit, if I may use the expression.

This regulation depends upon the winding entirely. A machine wound on similar principles will run at a constant speed on a constant current circuit, but only when working below 50 per cent. efficiency. If working above 50 per cent. efficiency, an automatic mechanical governor is required. It is impossible to wind a machine to run at a constant speed under variable load on a constant current circuit and work above 50 per cent. efficiency.

Mr. Duncan—We have a 60 light machine of about 2,500 volts. I am informed that we could deliver from that machine about 45 or 50 h. p.; take that as a figure. Can we run such a motor?

Mr. Sprague—You can contract to deliver that number of horse-power, if there are a large number of small motors on account of the intermittent use.

Mr. Wheeler—Why is it not as well to run out independent circuits for large powers and work on constant current circuits.

Mr. Sprague—With equal total electromotive force, the weight of wire would be the same, but with the constant current you would have a large number of circuits, the regulation would be far more difficult, and the advantage of intermittent use would be lost. There are many other objections, but these ought to be enough.

After some further discussion as to the practicability of supplying power from a constant current station,

Mr. Morrison said—Mr. Sprague takes the ground that a successful motor service should be run from a central motor station. All of Mr. Sprague's argument is that the motor business pays better than the electric light business, and I think that he has proven that very satisfactorily by the figures he has given you. But it does not entirely solve the question which is being discussed here, how arc light companies can utilize their surplus current. He told you that if he had a company that had spare power he would use it. There is another thing here, he does not care to deal with small motors. He prefers the larger sized motors, and I think he is very sensible. If you come to 1 h. p. motors and one-half h. p motors, they can be put upon the arc light circuit; if you are going to abandon the electric lighting business and go into the motor business, then take the plan that Mr. Sprague suggests.

Prof. Houston, having been introduced by the chairman, spoke as follows on

THE FUTURE OF ELECTRIC MOTORS.

I have not very much to say on the subject of motors, but it seems to me of all the bright future which seems to be in store for us as those interested in electrical matters, that in the direction of electric motors the sky appears to be the brightest. For, when we bear in mind the economy which is possible in the electric motor (and I was glad to hear Mr. Sprague speak in such unqualified terms respecting it); when we consider the very great economy of the electric motor, its small bulk and the wonderful power it is capable of rendering, it seems to me that comparatively little is needed in order to permit the steam engine to become a thing of the past, and the dynamo-electric machine become the motor of the future. Of course, as we all know, such a state of things would be impossible as long as we have to rely upon the steam engine as a prime motor to furnish the electric current; but I take it that inventive genius will not be found long wanting to devise a practical means whereby the burning of coal can be directly applied to the production of electricity; and as soon as

Digitized by Google

that is accomplished, then, beyond any question, the steam engine becomes a thing of the past—a toy—an historical piece of apparatus. And ye, fellow workers, know what that means; ye engine and boiler men know what that means—when you can pack on a small floor space a machine capable of developing three, four, five, six, seven thousand h. p. if you only have the wherewith to put into it. I think the chances are that that will be solved. I think the chances are good, and that it will be made when one succeeds in solving the problem of how to change a current of low electromotive force into one of high electromotive force.

It is recognized to-day that coal can be burned to produce electrical power, and I do not think it requires any great prophetic power, looking into the future, to see that this is not only a possibility but a probability—and of the near future. I confidently expect to live to see it.

When it was proposed to cross the Atlantic by means of steam, it was shown beyond peradventure by the very best mathematical ability, by the highest engineer authorities in the world, that it would clearly be impossible for a vessel ever to cross the Atlantic Ocean by means of steam, because, as it was argued and proved, the coal necessary to supply such a vessel would sink the ship.

Now, gentlemen, on exactly the same plan, is it not true—will you excuse me if I vaporize a little—that the only thing that stands in the way of aerial navigation to-day is compact motor power? We can certainly fly, and we can certainly navigate the air, not by means of balloons, but by some motive power, if we can get a compact motor. It seems to me not only possible, but very probable, that the electric motor may solve this particular requirement. It may not be impossible that we shall live to see flying. I certainly expect not to fly myself, as that would require considerable power, but to see machines carrying their passengers through the air.

It does seem to me that of the attractions of this field, the most practical and the one in which the future is brightest to us, is in the direction of electric motors; and I believe, too, in electric motors on arc light circuits, even electric motors in series as well as electric motors on constant potential circuits.

THURSDAY MORNING SESSION.

At the opening of the session, Mr. F. H. Ball read a paper on "Converting the Heat Energy of Coal Into Electrical Energy."

Mr. Ball's paper treated of the losses incident to the conversion of heat energy into electrical energy, and indulged in some sanguine expectations of the discovery at no distant day, of a direct conversion of the heat of coal into electricity. The paper concluded with the announcement of a new discovery in the speed regulation of engines, the nature of which was not disclosed.

The president pointed out that the loss referred to by Mr. Ball would apply not only in the case of any dynamo operated by steam, but in that of a flour mill or a cloth mill, or any other mill using steam direct. The fault lay with the engine, not with the dynamo, whose efficiency of conversion was the highest possible.

Mr. Ball admitted this, but in reply to questions from Mr. Morrison and Mr. Wetzler said he did not feel quite at liberty yet to state what was his improvement in engines relating to the governor.

The secretary read a communication from Mr. C. J. Van Depoele to Mr. G. S. Bowen, as to the success of the electric motor applied to street cars on several of the Van Depoele roads, making particular mention of those at Montgomery, Ala., Scranton, Pa., Detroit, Mich., Windsor, Ont., and Port Huron, Mich.

A paper on "Incandescent Lights on High Tension Circuits" was then read by Mr. Joseph Wetzler. (See page 90.)

At the conclusion of Mr. Wetzler's paper, it was suggested that as Dr. Moses would speak on a kindred subject it might save time to hear him next, and have the discussion on secondary batteries and secondary generators together.

Dr. Otto A. Moses, who had recently inspected the secondary generator plant at Pittsburg, put in by the Westinghouse company, then gave an extemporaneous address on "Secondary Generators." He said:

It is necessary at the outset of the address to state some of the conditions under which secondary generators can be and must be employed. The excellent paper they had just listened to pointed out one of the great difficulties in the way of the proper distribution of electric current. Mr. Sprague, yesterday, spoke of the great difficulty of running electric lights and motors from the same circuit, with present distribution. Now, to distribute current from a central station means to give what is wanted when it is wanted; but, as during the hours of night there is little demand for current, it is reasonable to suppose that at the time when energy is not being generated, the commercial value of the heavy investment in plant for producing current is not being utilized. He would suggest that that is the pivotal point upon which discussion must turn.

Dr. Moses then went on to point out that when Mr. Edison started his first large central station in New York, the principle was laid down that when a thing is wanted you must be able to supply it, and that there is no use in supplying it until it is wanted. He thought an error was made there, not in the principle, but in its application to the facts, for the true principle was to utilize your plant to the utmost by producing current without cessation. Now, as during the night there is little demand for current, the current in such a station would either have to be stored or not produced, But in order to make the plant really profitable, the current must be produced, thus utilizing the plant to the utmost extent. It followed, too, that such current should be manufactured—and stored—in places where the investment in land and realty would be brought down to a minimum. This meant for one thing carrying the agencies of current production to the place where the chief element of production was to be found. That, however, was a matter for the future. Meantime, he held that if currents of electricity are to be manufactured and handled with safety so as to take the place of other forms of energy now bought and sold, it must be delivered at low potentials where and when it is wanted in cities, but must be transmitted at high potentials from its extra mural places of low cost production. That proposition he regarded as now self-evident, and the method for such work was to be found in the use of secondary generators. The problem was to bring currents of high electromotive force from a distance and then to transform them into currents of low electromotive force. That problem had been attacked and solved.

Dr. Moses proceeded to give a brief but very interesting sketch of the development of theory and practice in the use of induction coils, dating from Faraday, and coming down to modern work with "transformers" and "secondary generators," and he called special attention to the extraordinary fact that so long a time should have passed before any one thought of reversing the action of induction coils for practical use, so as to make the fine wire coil the primary instead of the secondary. But in 1882, Gaulard, of France, undertook to make his transformer with a fine-wire primary, and thence dated the solution of the whole question as to the transmission of electrical energy from a distance.

Coming down to the introduction of the well-known Gaulard-Gibbs system in this country, Dr. Moses gave an account of his inspection of the plant as put in on the Westinghouse plan at Pittsburg. There was, he said, in that alternating current station none of the paraphernalia of enormous generators, with complicated commutators, and with all the accompanying apparatus necessary to regulate the current. They had all long ago, he believed, seen that the commutator was the weak spot in the machines for the continuous current, but in the alternating machine this commutator was done away with. In the system of secondary generation, where currents of opposite polarity are induced, there was no necessity to "correct" the currents. The currents were taken directly from the collectors as they were produced, and there was no necessity to straighten them—to change their direction—by costly and intricate commutators. These alternating machines he saw were easily manufactured. All the mechanical difficulties seemed to have been eliminated. There were simply masses of iron and massive coils, and no commutator to interfere with the proper working of the system, and the result was that these new producers of current could be made at a low cost. At Pittsburg, in fact, the whole station seemed to him to be notable for the simplicity of its details and construction. Natural gas was burned under the boilers, and the Westinghouse engine was used. In the present state of the art it was necessary to use a little exciter for the alternating machine, but he wanted to be put on record as saying that the time was not far distant when this device for exciting the fields would no longer be needed. The exciter was, however, a detail of minor importance.

Dr. Moses then gave an outline of the familiar principles involved in the use of the converters or transformers on the line, and pointed out that great flexibility of system was secured, so that any current of any potential and any quantity could be taken off where wanted. Moreover, he said, it will be possible to so change the direction of that alternating current as to effect electro deposition by it; to get off direct currents from it, and, in fact, to apply it to any use for which electricity is in demand,

After asserting his belief that with the alternating current system such great powers as Niagara could be utilized, 30,000, or even 100,000, volts potential being transformed down to large quantity currents of 5,000, 3,000, 1,000 or 500 volts, he closed by a reference to the work of Rankin Kennedy and the plan of placing the transformers in multiple arc.

DISCUSSION.

Mr. Morrison—What about the armatures of the dynamos?

Dr. Moses—The armature is one of exceeding simplicity. I saw them working right straight along, and if the thing works well once, there is no reason why it should not work well twice.

Mr. Morrison—Does it wear out?

Dr. Moses—There is nothing in it to wear out. There is metal in it, but that does not wear out, it is simply a question of making dynamos with proper insulation.

Mr. Morrison—Well, but does the insulation stand?

Dr. Moses—From the nature of the construction of the machine, I should say admirably well.

Digitized by Google

Mr. Morrison—But does it stand? How long has the apparatus been in operation?

Dr. Moses—There is a gentleman here from Pittsburg, Mr. Duncan, who is largely interested in electric lighting there—and, by the by, if you will let me say it, when I was in Pittsburg I visited his central stations, and very remarkable stations they are, like cocoons, one within the other. Mr. Duncan has investigated this subject, because, as I understand it, he has the complete control of this Westinghouse system in Allegheny county. He would, therefore, be the most proper person to speak about these questions of operation. As regards durability, beyond the mere theory of the matter, I must refer you to him.

Mr. Morrison—The only reason I have in asking these questions is that you have made specific declarations with regard to the value of this system, and that I want to find out just what you have to base that upon.

Dr. Moses—I have had correspondence on the subject, and I find that so satisfactory is the secondary generator system at present, that they are introducing in Rome a central station that will distribute to 20,000 incandescent lamps, and provision has already been made for 6,000.

Mr. Morrison said that he was after material facts and did not want to have the members blinded by the brilliant oratorical effects of the speaker. He wanted to determine the value of the thing. They had seen grow up among them a whole lot of promising electrical schemes, and they had found that when applied, many of them did not yield the results that had been expected. Now, in the case of these converters, what facts had they to go upon? How long had they been in service? What results had been obtained? Did Dr. Moses ascertain on the spot, from personal observation, the life of the apparatus and its efficiency? The life was one of the main questions. If the life was short, then there must be frequent renewal, as in the case of the storage battery.

Mr. Weissleder wished to know whether that form of current could be utilized for storage battery purposes.

Dr. Moses replied that such a plan was possible and probable. They might, he thought, do what they pleased with it—get secondary, tertiary, fourth and fifth inductions with it, the only question being as to economy with each transformation. The loss would be in each from 1½ to 2 per cent.

As to the conditions under which the apparatus worked, he could only tell them what he saw. He saw the conductor running 1½ miles from the station—making 3 miles of circuit—and they were operating on it incandescent lamps in the stores along it. They were selling those lamps in Pittsburg, the home of natural gas.

Instead of using gas, the people were buying the incandescent light. South Pittsburg, where this system was in use, he should look upon as a rather poor locality. There were not many fine stores in it. It was narrow, the worst condition, as Mr. Sprague had said, for such distribution; it was long drawn out, and not linked sweetness by any means. It went out in one direction between the river and the hill, indefinitely, and yet along that strip they distributed from their lines. It was the worst condition possible for the distribution of incandescent lights.

Mr. Morrison wanted to know whether the light was taken in that locality because it was better than gas or because it was cheaper. In Baltimore gas was 60 cents a thousand, yet his company sold lights, and at a fair price, because the light was better than gas, because the air was purer, and for all the sanitary and other reasons.

Dr. Moses said they had on the floor the representative of a firm which had been instrumental in putting in that plant, and he presumed that gentleman could give them some facts as to cost, etc. As for himself, he could say he had seen the plant working smoothly, with self-regulation, from the boilers up to the alternating current machine and the transformers. He saw but very slight movement of the voltmeter, because the current was kept so very uniform; and he saw but one man about the whole station.

Mr. W. C. Kerr, speaking for the Westinghouse system, said he was very glad to be given the opportunity to dwell on the commercial aspect of the case. He and his associates had had a great deal to do with the introduction of new things, and in fact had done nothing but develop something new. There was always a great deal of misunderstanding, a great deal of doubt, to contend with, and at the same time an undoubted desire for information. That information could not always be given in a breath. Some of Mr. Morrison's questions, for instance, were very hard for Dr. Moses to answer. Dr. Moses, as a scientist, had examined certain apparatus and had arrived at some very conclusive impressions regarding it, as they could see from his remarks; but it was not to be expected that he would be ready to answer such questions from the commercial standpoint. As to the point of durability, it could be said that the system was not fully developed, so that one could guarantee it for, say twenty years. It was simply in the condition that all new things are. Various machines have been built. The system has been put in in various places, and time must elapse in which people could form their opinions. Without intending to make any advertisement of the system, he would mention the places where the system was in operation, and where lights were being rented. There was one at the South Side, Pittsburg, which Dr. Moses mentioned, one at Greensburgh, Pa., one at Carbondale, Pa., one at Plainfield, N. J., and one at Buffalo, N. Y. A small one at Torrington would be in operation in two weeks, so that within the present spring any one near any of those places could see them in operation, and form their own conclusions. One thing he would say: In building certain new apparatus, one could observe what relation it bore to other things known to work successfully; and reasons or deductions could be formed which could not be proven in a day or a month. That was the condition the system was in at the present time. It was working. It was running successfully. The test could be made by a visit, as well as by seeing other things which it resembles or which it supersedes to a certain extent. Thus they might make the comparison between the Westinghouse three wire station on Sansom street, running about 2,300 lights, which they had visited the night before, or the station at Trenton, and then go to Plainfield and notice what the station apparatus was there, and the nature of the attendance upon the station. That was a better demonstration than anybody could stand on that floor and give. It was very difficult when a thing was new and had only been before the public three or four months, to make specific statements, by which any one would care to be bound. He thought that by the time the association visited Pittsburg they would be able to see a great deal of the system for themselves.

Mr. Morrison—That is what I wanted—to do away with the idea that this problem was absolutely solved.

Mr. C. P. Curtiss—I was in Pittsburg about a month ago, and I investigated this question then. A gentleman there who stands as high as any on this question told me that of his own positive knowledge six or seven armatures had been burned out in one machine inside of 30 days. I would like to ask Dr. Moses if he had any points in that direction.

Dr. Moses—I passed about half a day in the station. I looked everywhere that I was permitted to look. I had also, I am very glad to say, an opportunity, in the enormous factories of the Westinghouse company, to see all the details of construction. Perhaps for that reason I should be guarded in what I say, because I know that in such large establishments there may be things going on which should not be spoken of. As far as the armatures are concerned, I had the privilege of seeing them manufactured, from the first stages up to their completion. I have had some experience in making dynamo machines, and I do not see why they should there continue in certain grooves of systematic manufacture, as they seem to if those machines were burning out so rapidly. It seems to me that I would "swap horses" if my armatures burned out six a day, or a week, or a month. But they appeared to be making the armatures in a regular systematic way, just as all of Mr. Westinghouse's machines and appliances are manufactured.

Mr. De Camp said that this system appeared to be an old thing recently renovated, and there must be some suspicion as to the merit of it, or else being so long known, it would have been more generally utilized. One of the objections he had heard was on the score of safety. Then he wanted to know what was its economy, what was the loss in induction. One gentleman had said to him that if those wires were run in front of an iron building it would create induction and loss of current.

Mr. Slattery regretted that Mr. Moses had made an omission of everything that could really guide them in determining the commercial efficiency of the system. He also took exception to the statement of Dr. Moses that prior to the work of Gaulard and Gibbs, no coil had been made to transform high tension into low tension current. The very coil of Faraday that the doctor had referred to was composed of about No. 14 B. & S. gauge, and he believed that the primary and secondary wires were nearly identical in diameter and in number of turns, which after all were factors that would give them the necessary conditions in a commercial system of illumination if placed upon a multiple arc circuit or on a series circuit such as the Gaulard and Gibbs. That was to say, if they passed 10 amperes through that primary—and No. 14 B. & S. had a perfectly safe carrying capacity for 10 or 12 amperes—they would get commercial results in the secondary circuits or, in other words, they could operate incandescent lamps. Although he wanted precise information as to this particular system, Mr. Slattery said there was no doubt at all about the fact, as a fact, that the transformation from high tension into low tension could be done efficiently.

Mr. Duncan, after taking occasion to protect the good fame and character of natural gas as used in Pittsburg, went on to speak of the work he was doing in supplying incandescent lights there, and of the reasons why that light was preferred there, as against cheap gas of any kind. Hitherto he said, that they always had a very dirty city, except during the last two years, when they had brightened up a little. It had been a city of gloom, heavy fogs, etc., but the gas had been very poor. Latterly, owing to the competition, however, the gas companies had been stirred up, with the consequence that they got a very excellent quality of illuminating

Digitized by Google

gas now at from 80 cents to $1 per 1,000. But the people preferred the incandescent light. It was easily handled. It was a cleaner article than gas.

The Pittsburg Light company, organized and operating on the south side, was using the system with machinery, which had been in operation there for two weeks. It was pretty hard to say after two weeks, as to the economy of the system, or as to why one armature burned out, or a dozen. It was not so long ago, as they knew, that arc light machines burned out. That question, anyhow, it seemed to him, ought to be left out. It was not a fair matter of discussion before the convention. But there was the Greensburgh plant. He had been told by Greensburg people that some armatures burned out, but he had also been told by the engineer in charge of that station that an armature in one of the machines had been running for four weeks consecutively; and he claimed that an armature running four weeks would run indefinitely. It was a problem of mechanical construction, and he did not think it entered into that discussion at all, and he did not see how any question of burning of armatures could militate against the proper consideration of the system. As for himself, when he first looked into the system, he did not think very favorably of it, but after several visits to Greensburg, and after seeing the operation in the South Side station, where everything was running smoothly with 600 lights and the regulation in the station was as close as 2½ to 3 per cent., he had begun to think that there was a very great future for it, and he could not see why there should not be. He invited the members to correspond with him on the subject, promising to give them any information he could. All he could state now was that the system had not been sufficiently developed for any man to speak as to the relative merits, in dollars and cents.

Mr. Powers pointed out that under any conditions, to carry a current any great distance, whether it be alternating or direct, there must be a percentage of loss, and practically the loss in each case must be precisely the same for the conveyance of the current. With the alternating current they gained flexibility of system and paid for that the cost of conversion. As to the question of danger, he had had some experience with alternating current machine manufacture, and knew something about the effects of the alternating current upon the human system. Those effects were extremely unpleasant. He would rather take a sharp shock from a direct current of 1,000 volts than from an alternating current of 500 volts. Mr. Powers also suggested that there would be danger of accident if any one in a building were to stand on a radiator or something of that kind and as one might unthinkingly take hold of the secondary connection of the lamp or lamp holder. Would there not be extreme danger of a current of that potential destroying the insulation? Would it not be likely to produce fatal results there? That struck him as the most dangerous aspect of the case, as fires might be produced in that way.

Mr. Kimball—I should take pleasure in answering the two questions, and I would like to read two or three notes that may have a direct bearing on this question of distribution by alternating currents.

In 1877, Prof. Thomson, now of the Thomson-Houston Electric Co., of Boston, delivered a lecture and, among other things, proved to his audience the reversibility of the induction coil and also that the discharge of static electricity was identically the same as that of a continuous current from batteries. One of his experiments was the passing of a current from several gallon Leyden jars through the fine wire of an induction coil or its secondary circuit, as it is more commonly designated; the *ends* of the coarse wire or *primary* coil, having been previously brought into slight contact, a bright spark and a fusion of the wire ends resulted, sufficient to cause the terminals to stick together; thus at that early day giving a forecast of the method of electric welding, which has since been developed into a practicable electro-mechanical process. Experiments were carried on by Professors Thomson and Houston during 1878 and 1879; coils of insulated copper were made of a hoop shape and wound over with an iron wire sheathing.

This, of course, was before the incandescent lamp had been brought to a suitable condition for commercial use. Since the production of the incandescent lamp, these researches have been extended with a view to developing a complete system to meet the requirements of long-distance transmission of electrical energy. How successfully must be demonstrated by the apparatus itself. I may, however, briefly mention a dynamo machine which is self exciting and automatic in its regulation for any number of lamps turned off or on up to the capacity of the machine, delivering a current alternating in its direction through the line, and, upon such a circuit—in which the usual form of electro-magnet reacts upon itself to such an extent that its temperature may be raised to the melting point—apparatus has been devised having all the properties of electro-magnets, giving a push or a pull proportionate to the current expended, thus enabling the construction of direct reading voltmeters and ammeters, arc lamps, the running of specially constructed motors for the distribution of power, and still further, the operation of plating machines and of electrical devices for measuring the alternating impulses given to the line, all being supplied from the same wire. Safety devices are used which make the danger to life and property no greater in the building or residence than with the low tension dynamo of 100 volts difference of potential with which we are familiar. Still more, it has been demonstrated that although the wiring of this system follows the laws of multiple arc conductors, and points widely separated are subject to a rise or fall in their E. M. F., that a means is at hand for equalizing these discrepancies in such a manner as to maintain the entire network in constant equilibrium at an even difference of potential at the poles of the lamp under great changes in the number of lamps connected, and while not *necessarily* depreciating other apparatus, we have opened up an immense field of incandescent electric lighting at a distance from the central station.

Mr. Carl Hering rose to correct an impression that had been formed as to the apparatus shown at the Franklin Institute by him on the previous evening, and about which he had remarked that the coil used would disintegrate quickly. It was the Zipernowski-Deri, whereas the Westinghouse coil, as they all know, was the Gaulard-Gibbs. He also called attention briefly to the work of Mr. Gordon in England.

Mr. Weissleder moved that a committee be appointed to report on secondary distribution at the next meeting of the convention.

Mr. De Camp asked as to potential used in Pittsburg.

Mr. Duncan—About 1,000 volts.

Mr. De Camp—Are the converters put inside or outside the building?

Mr. Duncan—They are in most cases placed upon the poles between the two cross-arms; and in another case, where there is a distribution of 250 or 300 lights, I understand that they have put the boxes inside the building in the cellar.

Mr. De Camp—They put them on the poles because it is objectionable to put them inside?

Mr. Duncan—As I understand it, it is a matter of convenience for distribution, for the reason that if you take the ordinary store such as we have to deal with on the South Side, they only require on the average fifteen 16 c. p. lights; and as the poles are, I presume, about 140 to 160 feet apart, it is a matter of economy to place those converter boxes upon the poles and thence to distribute to either side of the streets, running off lines accordingly. The place where there is a distributor in the house is in a public building, of about 250 lights. They put a converter in that case in the second story of the Market House as a matter of convenience for distribution.

The following committee on secondary distribution was then appointed:—Messrs. Weissleder, Slattery and Carl Hering.

An interval in the discussion on secondary generators was occupied by Mr. C. J. Kintner, examiner of the U. S. patent office in Class Electricity. Mr. Kintner dealt briefly with the subject of Patent Office Reform.

He wished to make some extenuation of what Mr. Steuart had reported, while heartily commending the report and the efforts that gentleman outside the patent office were making in the direction of reform. He wanted them, however, to appreciate the difficulties of the position in which he was placed as a public officer in carrying out in anything like a successful manner the business of properly examining the applications which came before the patent office. He professed to be perhaps as well prepared, theoretically, as most of them, to cope with the technical questions arising, but he was without the apparatus that any well organized institution like the patent office ought to have. To-day they had in that office a laboratory the total material of which cost less than $500! A little over a year ago it became his privilege as chief of the electrical division to recommend to the commissioner of patents a system which, in his opinion, would put the experts of the patent office upon a par with those outside in every respect. He recommended in his report that a central plant be stationed within the court of the building, that a workshop should be organized, and that a system of heating and lighting the building be combined there, by which it would be possible to light and to heat without any other expense, and the apparatus would pay for itself. No progress had yet been made in that direction, however, and, in fact, if they would look back through the reports of the commissioner of patents they would find the same old story regularly repeated of want of room, want of force, want of everything which would go to make a complete system of examination of patents. Yet they did their work in a creditable manner, turning out patents of which he ventured to say that four-fifths would be sustained by the courts. It was marvelous how they did it.

M. Kintner then called attention to the fact that the rapid development of electricity had necessitated the division of his department into two sections, and urged that the whole matter of reform and attention to wants, as suggested in Mr. Steuart's report, lay in the hands of the members themselves, as inventors or users of patented apparatus. He also considered the suggestion as to the patent court as eminently proper. The present system of appeals, too, was, to use a vulgar but pithy expression, "tail-end-too." The examiner in charge of a division is an expert upon the merits of a case, and he is appealed from to

Digitized by Google

Mr. Morrison—But does it stand? How long has the apparatus been in operation?

Dr. Moses—There is a gentleman here from Pittsburg, Mr. Duncan, who is largely interested in electric lighting there—and, by the by, if you will let me say it, when I was in Pittsburg I visited his central stations, and very remarkable stations they are, like cocoons, one within the other. Mr. Duncan has investigated this subject, because, as I understand it, he has the complete control of this Westinghouse system in Allegheny county. He would, therefore, be the most proper person to speak about these questions of operation. As regards durability, beyond the mere theory of the matter, I must refer you to him.

Mr. Morrison—The only reason I have in asking these questions is that you have made specific declarations with regard to the value of this system, and that I want to find out just what you have to base that upon.

Dr. Moses—I have had correspondence on the subject, and I find that so satisfactory is the secondary generator system at present, that they are introducing in Rome a central station that will distribute to 20,000 incandescent lamps, and provision has already been made for 6,000.

Mr. Morrison said that he was after material facts and did not want to have the members blinded by the brilliant oratorical effects of the speaker. He wanted to determine the value of the thing. They had seen grow up among them a whole lot of promising electrical schemes, and they had found that when applied, many of them did not yield the results that had been expected. Now, in the case of these converters, what facts had they to go upon? How long had they been in service? What results had been obtained? Did Dr. Moses ascertain on the spot, from personal observation, the life of the apparatus and its efficiency? The life was one of the main questions. If the life was short, then there must be frequent renewal, as in the case of the storage battery.

Mr. Weissleder wished to know whether that form of current could be utilized for storage battery purposes.

Dr. Moses replied that such a plan was possible and probable. They might, he thought, do what they pleased with it—get secondary, tertiary, fourth and fifth inductions with it, the only question being as to economy with each transformation. The loss would be in each from 1½ to 2 per cent.

As to the conditions under which the apparatus worked, he could only tell them what he saw. He saw the conductor running 1½ miles from the station—making 3 miles of circuit—and they were operating on it incandescent lamps in the stores along it. They were selling those lamps in Pittsburg, the home of natural gas.

Instead of using gas, the people were buying the incandescent light. South Pittsburg, where this system was in use, he should look upon as a rather poor locality. There were not many fine stores in it. It was narrow, the worst condition, as Mr. Sprague had said, for such distribution; it was long drawn out, and not linked sweetness by any means. It went out in one direction between the river and the hill, indefinitely, and yet along that strip they distributed from their lines. It was the worst condition possible for the distribution of incandescent lights.

Mr. Morrison wanted to know whether the light was taken in that locality because it was better than gas or because it was cheaper. In Baltimore gas was 60 cents a thousand, yet his company sold lights, and at a fair price, because the light was better than gas, because the air was purer, and for all the sanitary and other reasons.

Dr. Moses said they had on the floor the representative of a firm which had been instrumental in putting in that plant, and he presumed that gentleman could give them some facts as to cost, etc. As for himself, he could say he had seen the plant working smoothly, with self-regulation, from the boilers up to the alternating current machine and the transformers. He saw but very slight movement of the voltmeter, because the current was kept so very uniform; and he saw but one man about the whole station.

Mr. W. C. Kerr, speaking for the Westinghouse system, said he was very glad to be given the opportunity to dwell on the commercial aspect of the case. He and his associates had had a great deal to do with the introduction of new things, and in fact had done nothing but develop something new. There was always a great deal of misunderstanding, a great deal of doubt, to contend with, and at the same time an undoubted desire for information. That information could not always be given in a breath. Some of Mr. Morrison's questions, for instance, were very hard for Dr. Moses to answer. Dr. Moses, as a scientist, had examined certain apparatus and had arrived at some very conclusive impressions regarding it, as they could see from his remarks; but it was not to be expected that he would be ready to answer such questions from the commercial standpoint. As to the point of durability, it could be said that the system was not fully developed, so that one could guarantee it for, say twenty years. It was simply in the condition that all new things are. Various machines have been built. The system has been put in in various places, and time must elapse in which people could form their opinions. Without intending to make any advertisement of the system, he would mention the places where the system was in operation, and where lights were being rented. There was one at the South Side, Pittsburg, which Dr. Moses mentioned, one at Greensburgh, Pa., one at Carbondale, Pa., one at Plainfield, N. J., and one at Buffalo, N. Y. A small one at Torrington would be in operation in two weeks, so that within the present spring any one near any of those places could see them in operation, and form their own conclusions. One thing he would say: In building certain new apparatus, one could observe what relation it bore to other things known to work successfully; and reasons or deductions could be formed which could not be proven in a day or a month. That was the condition the system was in at the present time. It was working. It was running successfully. The test could be made by a visit, as well as by seeing other things which it resembles or which it supersedes to a certain extent. Thus they might make the comparison between the Westinghouse three wire station on Sansom street, running about 2,300 lights, which they had visited the night before, or the station at Trenton, and then go to Plainfield and notice what the station apparatus was there, and the nature of the attendance upon the station. That was a better demonstration than anybody could stand on that floor and give. It was very difficult when a thing was new and had only been before the public three or four months, to make specific statements, by which any one would care to be bound. He thought that by the time the association visited Pittsburg they would be able to see a great deal of the system for themselves.

Mr. Morrison—That is what I wanted—to do away with the idea that this problem was absolutely solved.

Mr. C. P. Curtiss—I was in Pittsburg about a month ago, and I investigated this question then. A gentleman there who stands as high as any on this question told me that of his own positive knowledge six or seven armatures had been burned out in one machine inside of 30 days. I would like to ask Dr. Moses if he had any points in that direction.

Dr. Moses—I passed about half a day in the station. I looked everywhere that I was permitted to look. I had also, I am very glad to say, an opportunity, in the enormous factories of the Westinghouse company, to see all the details of construction. Perhaps for that reason I should be guarded in what I say, because I know that in such large establishments there may be things going on which should not be spoken of. As far as the armatures are concerned, I had the privilege of seeing them manufactured, from the first stages up to their completion. I have had some experience in making dynamo machines, and I do not see why they should there continue in certain grooves of systematic manufacture, as they seem to if those machines were burning out so rapidly. It seems to me that I would "swap horses" if my armatures burned out six a day, or a week, or a month. But they appeared to be making the armatures in a regular systematic way, just as all of Mr. Westinghouse's machines and appliances are manufactured.

Mr. De Camp said that this system appeared to be an old thing recently renovated, and there must be some suspicion as to the merit of it, or else being so long known, it would have been more generally utilized. One of the objections he had heard was on the score of safety. Then he wanted to know what was its economy, what was the loss in induction. One gentleman had said to him that if those wires were run in front of an iron building it would create induction and loss of current.

Mr. Slattery regretted that Mr. Moses had made an omission of everything that could really guide them in determining the commercial efficiency of the system. He also took exception to the statement of Dr. Moses that prior to the work of Gaulard and Gibbs, no coil had been made to transform high tension into low tension current. The very coil of Faraday that the doctor had referred to was composed of about No. 14 B. & S. gauge, and he believed that the primary and secondary wires were nearly identical in diameter and in number of turns, which after all were factors that would give them the necessary conditions in a commercial system of illumination if placed upon a multiple arc circuit or on a series circuit such as the Gaulard and Gibbs. That was to say, if they passed 10 amperes through that primary—and No. 14 B. & S. had a perfectly safe carrying capacity for 10 or 12 amperes—they would get commercial results in the secondary circuits or, in other words, they could operate incandescent lamps. Although he wanted precise information as to this particular system, Mr. Slattery said there was no doubt at all about the fact, as a fact, that the transformation from high tension into low tension could be done efficiently.

Mr. Duncan, after taking occasion to protect the good fame and character of natural gas as used in Pittsburg, went on to speak of the work he was doing in supplying incandescent lights there, and of the reasons why that light was preferred there, as against cheap gas of any kind. Hitherto he said, that they always had a very dirty city, except during the last two years, when they had brightened up a little. It had been a city of gloom, heavy fogs, etc., but the gas had been very poor. Latterly, owing to the competition, however, the gas companies had been stirred up, with the consequence that they got a very excellent quality of illuminating

Digitized by Google

gas now at from 80 cents to $1 per 1,000. But the people preferred the incandescent light. It was easily handled. It was a cleaner article than gas.

The Pittsburg Light company, organized and operating on the south side, was using the system with machinery, which had been in operation there for two weeks. It was pretty hard to say after two weeks, as to the economy of the system, or as to why one armature burned out, or a dozen. It was not so long ago, as they knew, that arc light machines burned out. That question, anyhow, it seemed to him, ought to be left out. It was not a fair matter of discussion before the convention. But there was the Greensburgh plant. He had been told by Greensburg people that some armatures burned out, but he had also been told by the engineer in charge of that station that an armature in one of the machines had been running for four weeks consecutively; and he claimed that an armature running four weeks would run indefinitely. It was a problem of mechanical construction, and he did not think it entered into that discussion at all, and he did not see how any question of burning of armatures could militate against the proper consideration of the system. As for himself, when he first looked into the system, he did not think very favorably of it, but after several visits to Greensburg, and after seeing the operation in the South Side station, where everything was running smoothly with 600 lights and the regulation in the station was as close as 2½ to 3 per cent., he had begun to think that there was a very great future for it, and he could not see why there should not be. He invited the members to correspond with him on the subject, promising to give them any information he could. All he could state now was that the system had not been sufficiently developed for any man to speak as to the relative merits, in dollars and cents.

Mr. Powers pointed out that under any conditions, to carry a current any great distance, whether it be alternating or direct, there must be a percentage of loss, and practically the loss in each case must be precisely the same for the conveyance of the current. With the alternating current they gained flexibility of system and paid for that the cost of conversion. As to the question of danger, he had had some experience with alternating current machine manufacture, and knew something about the effects of the alternating current upon the human system. Those effects were extremely unpleasant. He would rather take a sharp shock from a direct current of 1,000 volts than from an alternating current of 500 volts. Mr. Powers also suggested that there would be danger of accident if any one in a building were to stand on a radiator or something of that kind and as one might unthinkingly take hold of the secondary connection of the lamp or lamp holder. Would there not be extreme danger of a current of that potential destroying the insulation? Would it not be likely to produce fatal results there? That struck him as the most dangerous aspect of the case, as fires might be produced in that way.

Mr. Kimball—I should take pleasure in answering the two questions, and I would like to read two or three notes that may have a direct bearing on this question of distribution by alternating currents.

In 1877, Prof. Thomson, now of the Thomson-Houston Electric Co., of Boston, delivered a lecture and, among other things, proved to his audience the reversibility of the induction coil and also that the discharge of static electricity was identically the same as that of a continuous current from batteries. One of his experiments was the passing of a current from several gallon Leyden jars through the fine wire of an induction coil or its secondary circuit, as it is more commonly designated; the *ends* of the coarse wire or *primary* coil, having been previously brought into slight contact, a bright spark and a fusion of the wire ends resulted, sufficient to cause the terminals to stick together; thus at that early day giving a forecast of the method of electric welding, which has since been developed into a practicable electro-mechanical process. Experiments were carried on by Professors Thomson and Houston during 1878 and 1879; coils of insulated copper were made of a hoop shape and wound over with an iron wire sheathing.

This, of course, was before the incandescent lamp had been brought to a suitable condition for commercial use. Since the production of the incandescent lamp, these researches have been extended with a view to developing a complete system to meet the requirements of long-distance transmission of electrical energy. How successfully must be demonstrated by the apparatus itself. I may, however, briefly mention a dynamo machine which is self exciting and automatic in its regulation for any number of lamps turned off or on up to the capacity of the machine, delivering a current alternating in its direction through the line, and, upon such a circuit—in which the usual form of electro-magnet reacts upon itself to such an extent that its temperature may be raised to the melting point—apparatus has been devised having all the properties of electro-magnets, giving a push or a pull proportionate to the current expended, thus enabling the construction of direct reading voltmeters and ammeters, arc lamps, the running of specially constructed motors for the distribution of power, and still further, the operation of plating machines and of electrical devices for measuring the alternating impulses given to the line, all being supplied from the same wire. Safety devices are used which make the danger to life and property no greater in the building or residence than with the low tension dynamo of 100 volts difference of potential with which we are familiar. Still more, it has been demonstrated that although the wiring of this system follows the laws of multiple arc conductors, and points widely separated are subject to a rise or fall in their E. M. F., that a means is at hand for equalizing these discrepancies in such a manner as to maintain the entire network in constant equilibrium at an even difference of potential at the poles of the lamp under great changes in the number of lamps connected, and while not *necessarily* depreciating other apparatus, we have opened up an immense field of incandescent electric lighting at a distance from the central station.

Mr. Carl Hering rose to correct an impression that had been formed as to the apparatus shown at the Franklin Institute by him on the previous evening, and about which he had remarked that the coil used would disintegrate quickly. It was the Zipernowski-Deri, whereas the Westinghouse coil, as they all know, was the Gaulard-Gibbs. He also called attention briefly to the work of Mr. Gordon in England.

Mr. Weissleder moved that a committee be appointed to report on secondary distribution at the next meeting of the convention.

Mr. De Camp asked as to potential used in Pittsburg.

Mr. Duncan—About 1,000 volts.

Mr. De Camp—Are the converters put inside or outside the building?

Mr. Duncan—They are in most cases placed upon the poles between the two cross-arms; and in another case, where there is a distribution of 250 or 300 lights, I understand that they have put the boxes inside the building in the cellar.

Mr. De Camp—They put them on the poles because it is objectionable to put them inside?

Mr. Duncan—As I understand it, it is a matter of convenience for distribution, for the reason that if you take the ordinary store such as we have to deal with on the South Side, they only require on the average fifteen 16 c. p. lights; and as the poles are, I presume, about 140 to 160 feet apart, it is a matter of economy to place those converter boxes upon the poles and thence to distribute to either side of the streets, running off lines accordingly. The place where there is a distributor in the house is in a public building, of about 250 lights. They put a converter in that case in the second story of the Market House as a matter of convenience for distribution.

The following committee on secondary distribution was then appointed:—Messrs. Weissleder, Slattery and Carl Hering.

An interval in the discussion on secondary generators was occupied by Mr. C. J. Kintner, examiner of the U. S. patent office in Class Electricity. Mr. Kintner dealt briefly with the subject of Patent Office Reform.

He wished to make some extenuation of what Mr. Steuart had reported, while heartily commending the report and the efforts that gentleman outside the patent office were making in the direction of reform. He wanted them, however, to appreciate the difficulties of the position in which he was placed as a public officer in carrying out in anything like a successful manner the business of properly examining the applications which came before the patent office. He professed to be perhaps as well prepared, theoretically, as most of them, to cope with the technical questions arising, but he was without the apparatus that any well organized institution like the patent office ought to have. To-day they had in that office a laboratory the total material of which cost less than $500! A little over a year ago it became his privilege as chief of the electrical division to recommend to the commissioner of patents a system which, in his opinion, would put the experts of the patent office upon a par with those outside in every respect. He recommended in his report that a central plant be stationed within the court of the building, that a workshop should be organized, and that a system of heating and lighting the building be combined there, by which it would be possible to light and to heat without any other expense, and the apparatus would pay for itself, No progress had yet been made in that direction, however, and, in fact, if they would look back through the reports of the commissioner of patents they would find the same old story regularly repeated of want of room, want of force, want of everything which would go to make a complete system of examination of patents. Yet they did their work in a creditable manner, turning out patents of which he ventured to say that four-fifths would be sustained by the courts. It was marvelous how they did it.

M. Kintner then called attention to the fact that the rapid development of electricity had necessitated the division of his department into two sections, and urged that the whole matter of reform and attention to wants, as suggested in Mr. Steuart's report, lay in the hands of the members themselves, as inventors or users of patented apparatus. He also considered the suggestion as to the patent court as eminently proper. The present system of appeals, too, was, to use a vulgar but pithy expression, "tail-end-too." The examiner in charge of a division is an expert upon the merits of a case, and he is appealed from to

Digitized by Google

the board of examiners-in-chief, of whom, it might be said, without any disrespect, that they were not experts in that special line any more than in the other 26 arts, as represented in the divisions of the patent office. Thence appeal lies to the commissioner of patents, who necessarily an able man in the law, does not pretend to be an expert in those technical branches; and from him to the District Court of the District of Columbia, and by appeal in equity to the Supreme Court of the United States. It would, therefore, be a proper course to pursue to provide such a patent court, to sit in judgment upon all disputed cases, all matters as to the merits of the cases, and all questions of infringement, so as to get unanimity and uniformity of decisions. Mr. Kintner closed by saying that he did not speak selfishly for himself. He did not expect to remain in the office another year, and was all the time in receipt of tempting offers to leave. The fact was that the personnel was constantly changing, because of the inducements from outside. While the changes he asked for would not benefit him now, they would do good to the office, and to inventors in the future,

The president then introduced to the meeting Mr. Ichisuki Fujioka, M. E., of Tokio, Japan, who was warmly received, and read a brief paper entitled "A Short Sketch of the Progress of Electrical Engineering in Japan." (See page 101.)

Mr. Weeks then expressed the pleasure felt by the convention in listening to the address, and said: "I am confident our friends abroad in the electric lighting business are pretty well assured that we have the deepest sympathy with them, and entertain toward them the most kindly feelings."

Messrs. Fujioka and Yashima were then elected honorary members of the association.

Mr. Yashima, president of the Tokio Electric Light Co., responded to the compliment.

Mr. Weissleder, chairman of the committee on nominations, having reported, the following officers were unanimously elected: President (third term), J. F. Morrison; vice-presidents, E. R. Weeks, A. J. DeCamp; executive committee, F. A. Gilbert, chairman, G. S. Bowen, F. Ridlon, C. Holbrook, Otto A. Moses, E. T. Lynch, Jr., and J. F. Noonan; treasurer, C. Cooper.

Mr. Morrison, on resuming the chair as president, said that for any man to declare that it was not an honor to be elected to the office would be saying what was not true, and the convention would not believe it. It was an honor, and one which he fully appreciated. At the same time he did not believe that the association acted wisely in re-electing the old officers year after year. He accepted the office with the hope that the same good will and kindness that had been shown toward him in the past would still be extended.

The next question being as to the place of meeting in the summer, Mr. Upton said he had been requested by Mr. Barton, of the Thomson-Houston Co., to suggest Boston.

The same suggestion came from Mr. F. A. Gilbert, president of the Boston Electric Light Co.

Boston was then chosen as the place of the next meeting, to be held in August next.

Mr. Duncan called attention to Pittsburg as a good meeting place one year from this time.

No further business being presented, the convention then adjourned.

The convention was attended by the following members and visitors:

Attleboro, Mass.—H. M. Daggett, Jr.
Baltimore.—W. Baxter, Jr., J. Evans, T. McCoubray, Jr., C. R. Deacon, Dr. L. Duncan, B. M. Greene, W. M. McDermott, J. F. Morrison, C. Selden, C. R. Sharretts, A. Steuart, D. H. Tuxworth.
Binghamton.—J. Anderson.
Boston.—W. I. Barker, S. E. Barton, C. E. Bibber, W. F. Brewster, H. B. Cram, H. H. Eustis, A. V. Garratt, H. McL. Harding, C. W. Holtzer, A. F. Mason, F. Ridlon, R. F. Ross, L. Schlegelmilch, E. S. Sears, A. F. Upton.
Bridgeport.—H. L. Bancroft, H. D. Stanley.
Brooklyn.—E. F. Peck, W. D. Sargent.
Buffalo, N. Y.—J. C. Weber.
Camden, N. J.—F. Reed.
Cincinnati.—L. H. Weissleder, W. L. Silvey.
Cleveland.—J. B. Crouse, C. P. Curtiss, W. A. Lawrence, F. B. Pettengill, J. Potter, C. D. Smith, C. L. Wright.
Chicago.—W. J. Buckley, C. K. Giles, H. A. Glasier, F. W. Harrington, C. C. Haskins, J. H. Shay, F. Stewart.
E. Cambridge, Mass.—S. O. Richardson, Jr.
Elizabeth, N. J.—P. Diehl, J. G. Greene, H. W. Pope.
Easton, Md.—J. H. Covington, C. T. Wrightson.
Elgin, Ill.—Wm. Hubbard.
Erie, Pa.—F. H. Ball.
Fitchburg, Mass.—F. Fosdick.
Fort Wayne, Ind.—R. T. McDonald.
Harrisburg, Pa.—E. Mather.
Hartford, Conn.—W. M. Bond, J. A. Dalzell, H. M. Linnell, M. J. Wightman, C. G. Young.
Jamestown, N. Y.—D. H. Smith.
Kansas City.—E. R. Weeks.
Lacrosse, Wis.—S. R. Montague.
North Adams, Mass.—H. E. Wetherbee.
Newark.—C. O. Baker, Jr., C. McIntyre.
New Haven.—F. A. Gilbert, J. Gilbert.
New York.—P. C. Ackerman, J. L. Barclay, J. W. Beane, G. L. Beetle, A. W. Butterworth, W. M. Callender, W. L. Candee, D. Chalmers, H. C. Davis, J. O. Ellinger, J. P. Ford, E. F. Gennert, C. W. Gould, C. B. Hotchkiss, H. Hall, A. S. Hibbard, H. Hine, H. B. Hungerford, W. J. Johnston, J. F. Kelly, W. C. Kerr, F. E. Kinsman, H. L. Lufkin, E. T. Lynch, Jr., Geo. T. Manson, T. C. Martin, Dr. Otto A. Moses, G. M. Phelps, Jr., R. W. Pope, J. B. Powell, C. W. Price, H. A. Reed, R. W. Ryan, H. W. Spang, F. J. Sprague, F. G. Stone, C. E. Stump, C. R. Truex, J. S. Walters, Arthur K. Watt, S. S. Wheeler, J. Wetzler, G. L. Wiley, G. Worthington.
Niagara Falls.—B. Rhodes.
Olneyville, Mass.—R. T. Robinson.
Philadelphia.—A. Bournonville, G. W. Boyer, W. C. Bryant, H. A. Cleverly, A. J. DeCamp, T. Dolan, N. H. Edgerton, H. S. Foster, H. C. Frempt, H. A. Fuller, M. M. Garver, W. A. Giles, Carl Hering, S. Holbrooke, H. Horne, Prof. E. J. Houston, W. C. Johnson, M. D. Law, W. D. Marks, - — McDevitt, A. F. Moore, M. R. Muckle, Jr.. E. D. Mullen, H. G. Oesterle, A. Partz, James A. Pentz, H. A. Pitcher, J. W. Queen, C. A. G. Riege, S. B. Richards, P. H. Richardson, W. M. Schlesinger, P. G. Salom, J. R. Simpson, W. E. Sharpe, A. L. Snowden, C. W. Tisdall, C. E. Trump, G. A. Wilbur, Chester Wilson, D. T. Van Dyke, J. L. Welsh, E. W. Wilkins, C. M. Wilkins.
Pittsburg.—S. A. Duncan, Z. Latshaw, G. F. Porter, H. A. Rehan.
Portland, Me.—F. A. Sawyer.
Poughkeepsie, N. Y.—J. M. Candee.
Providence.—H. N. Fenner, E. F. Phillips.
Savannah, Ga.—T. P. Keck.
Springfield, Mass.—C. A. Nichols, J. W. Hyde.
Springfield, Ill.—A. L. Ide.
St. Louis, Mo.—J. A. J. Schultz.
Tokio, Japan.—Ichisuki Fujioka, M. E., S. Yashima.
Taunton, Mass.—D. L. Mitchell.
Trenton, N. J.—Fred. H. Angell.
Troy, N. Y.—J. A. Powers.
Waterbury, Conn.—D. L. Hungerford.
Washington.—C. J. Kintner, F. C. Royce.
Woburn, Mass.—W. R. Kimball, M. M. M. Slattery, F. Swift.

Convention Exhibits.

Interest was added to the meeting by many exhibits of electric lamps, apparatus, and supplies, in rooms of the Hotel Lafayette, where most of the members of the association were lodged. Below is a list of them:

LAMPS AND APPLIANCES.

Schuyler Electric Light Co.—Series incandescent lamps with automatic cut-out.
J. A. Powers—The Little—McDonald cut-out for incandescent lamps.
Sun Electric Co.—Incandescent lamps and distributors.
Bernstein Electric Light Mfg. Co.—Incandescent lamps and cut-outs.

ELECTRIC MOTORS.

Baxter Motor Co.
"C. & C." Electric Motor Co.
Edgerton Electric Motor Co.—(Exhibiting at their rooms, near the Hotel Lafayette.)

CABLES AND WIRES.

A. G. Day—Kerite Wires and Cables.
Standard Underground Cable Co.—Waring lead-covered cables.
Okonite Company—Okonite Wires and Cables.
Callender Insulating and Water-proofing Co.—Bitite wires and cables.
American Electrical Works.—Insulated wires and cables.

TESTING INSTRUMENTS.

Western Electric Co.—Portable set, consisting of galvanometer, bridge rheostat and 24-cell chloride silver battery.

MISCELLANEOUS.

Giles Bros.—Anti-magnetic watch shield.
E. P. Gleason & Co.—Electric lamp shades.
H. G. Osterle, " " "
A. K. Watt.—Electric light hoods.
Elgin Telephone Co.—Acoustic telephones.
J. H. Bunnell & Co.—Insulated pliers for electric light linemen.

Notes.

A very delightful sequel to the meeting of the association was enjoyed by about 50 members who came to New York in a special car, to dine with the Electric Club, Thursday, in acceptance of the invitation so handsomely extended to the association. The dinner was followed by a paper from Mr. Stephen D. Field on "Electric Railways."

The *Electrical World*, with its accustomed dash, captured a printing office somewhere in Philadelphia, on the first day of the meeting, and followed closely on the heels of the sessions, with a daily bulletin of the proceedings, distributing it freely among members and visitors.

The *Electrical Review*, kept hospitable quarters at the Hotel Lafayette, with doors wide open to all. It was a pleasure to be counted a frequent visitor there.

THE PARK ELECTRIC BRAKE TEST.

On December 30th last a test was made on the Chicago, Burlington & Quincy Railroad, at Burlington, Iowa, of the Park electric freight train brake. Briefly described the construction of the brake is as follows: A dynamo driven by a small independent engine is placed on the locomotive; the dynamo and engine are detachable, and weigh together about 400 pounds. Three wires run the length of the train and are connected by one coupling. The engine applies or releases the brakes by moving a lever on a switch-board. The current runs to the end of the train through one wire and returns through the centre wire. When the brake is released, which is done by the

Digitized by Google

same lever, the current runs through the third wire and returns through the centre wire. When the coupling at the end of the train is pulled apart, the wires automatically make the proper connection in the couplings, so that the current when applied will make a circuit the length of the train and through the centre wire; consequently the couplings require little attention. For applying the current to set the brakes, an eccentric is mounted on one axle of each car; the end of the eccentric rod is made to engage, by means of pawls, in ratchet teeth on the periphery of a cast-iron drum carried on the under side of the middle sills of the car. The drum carries a chain which is attached to the brake and levers in the usual manner. The passing of the current causes the pawl worked by the eccentric rod to engage the drum, which winds up the chain and applies the brake. A second pawl prevents the drum running back when that driven by the eccentric rod is moving back to take another stroke. When the current ceases the latter stops, but the former pawl holds the brake on. When the current is passed through the third wire, this pawl is thrown out of gear and the brake released. The brake is full on in a few revolutions of the wheel, and is applied simultaneously throughout the length of the train. At the trial, however, 10 to 30 seconds were required to put the brakes on the train of 25 cars. The results were, for a speed of 13 miles per hour, distance 132 feet; for 20½ miles, 462 feet; for 21 miles, 440 feet; for 31 miles, 1,090 feet, and for 38 miles, 4,664 feet.—*American Engineer.*

THE PRACTICAL REQUIREMENTS OF SMALL MOTORS.[1]

BY S. S. WHEELER.

It is a remarkable fact that not only have none of the small electric motors thus far put upon the market been constructed on the same principles as those of an efficient dynamo machine, but no attempts seem to have ever been made to copy large machines in the very features which are known to make them efficient and practically serviceable.

Any electrician, in looking at the motors heretofore offered to the public, can see at a glance why they cannot have a good efficiency, why their resistances are necessarily high, why they have to be run at too high a speed, or why their commutators will spark badly and quickly wear out, and why it is entirely out of the question to use them for giving power in thousands of cases. And yet, notwithstanding that these objections are almost entirely removed in large motors built exactly like large dynamos, no small motors have ever been manufactured before which are any approximation to the larger machines in these important respects.

Probably the most important reason why so little attention or electrical ingenuity has been given to the subject of small motors is that the energies and inventive faculties of electricians have for the past three or four years been devoted to the problems of the transmission of large amounts of power, and especially the propulsion of street cars, etc., which present great difficulties, but difficulties that electric motors are especially suited to overcome. The natural result of this prospective demand for such sizes and kinds of electric motors as this work will require, has been the diversion of the best electrical talent in this direction, and the consequence has been the production of such machines, almost perfectly adapted to the requirements.

Meanwhile the subject of small motors has lain comparatively unnoticed. Each isolated want is of less importance to the user and of less value to the dealer than in the case of a large motor; in other words, as the small motor to be successful must be cheap, and the power to be supplied is small, there is little money in each individual case, and it is only when the number of individual users gets to be large that the matter of small motors becomes a promising field. It does not follow, however, from the lack of attention bestowed upon the subject, that there is no field for such work; on the contrary, there is an enormous number of individual instances where an electric motor would certainly be used if it be just good enough to come within the requirements.

In addition to the ordinary uses where we regard a motor as simply the best means of obtaining power for a certain purpose, for example, the running of a large number of small machines in a factory, where the motors and feeding wire take the place of shafting and belts, there are many places where the work would not be practicable without one, and where a motor, therefore, would be said to create the use. Such are all uses of very small amounts of power where an engine cannot be run, and which are beyond the capacity of a man at a treadle. There is a large class of uses for power where a steam engine is not admissible, and where a good electric motor on a circuit is the only alternative, and in the absence of a motor good enough to be safe on an electric light circuit, or efficient enough to be run economically, all these industries have to be conducted in other ways, to avoid the question of small power distribution.

The response to the demand for electricity for lighting, has been the production of dynamos of ninety-five per cent. efficiency, a far better result than is obtained in steam engines, and conversely these dynamos can be used as motors with the same efficiency. But the result of the needs of electric lighting, in response to which demand these dynamos have been created, is that they are machines of large power, and so in these we have motors of large power without further change, save as to means of regulation.

Now why is it that we have not already had for some years motors of very small power, and reasonably near the same perfection of efficiency?

It is because a small motor while requiring the electrical construction and efficiency-giving features of a large dynamo to be equally efficient, cannot, for several reasons, be made an exact miniature of the large dynamo in mechanical construction.

If you want a 1,000 horse-power engine, you will get a Corliss engine, with elaborate valves, adjustments, etc. But if you want one of one horse-power, you will not get a miniature of the Corliss engine, requiring an engineer to take care of it. You will get a Baxter or an oscillating cylinder engine, with no external valve gear or adjustments, which will almost take care of itself. You must to make a small motor successful for such practical purposes as it is to be used for, reduce the complication of its parts and its liability to get out of order.

Of course this is realized by every one who has given the subject any consideration, but, nevertheless, the practical result has been that the only small motors thus far produced have been made apparently without any analysis of the difficulties to be met and any consideration of the means for overcoming them. Many of these motors have been so entirely unsatisfactory that they have been looked upon as little better than toys, and have reacted discouragingly upon the public.

Some of these motors, if placed on an incandescent circuit, for which they are intended, will burn themselves up. Others are of such very low efficiency compared with dynamos, that they require treble and quadruple the amount of current to give the necessary power. This is the principal reason why small motors, run from batteries, have not been more successful heretofore. The batteries have not been particularly bad, but the motors, instead of making good use of the current furnished, which is costly at best, have simply

1. Read before the American Institute of Electrical Engineers, New York, February 8th, 1887.

Digitized by Google

slaughtered the battery when pressed to do the work, by drawing four times the amount of current which would do the work, if efficiently used. I refer, of course, to the failure of the motor to give a counter E. M. F. when running, to which is due this inefficiency. The E. M. F. generated by a machine when driven as a dynamo, is the real test of its efficiency.

In order to get counter E. M. F. or magnetic effect, which is the same thing, and which is shown by running the motor as a dynamo and observing how much current it will *generate*, it is necessary to have a strong field, a large number of convolutions on armature, and high circumferential speed, all of which are interchangeable as factors; while at the same time the resistance of the wire and the speed of the armature must be kept down. The first is necessary so as to permit strong current effects to be produced and large power to be exerted when the motor is running slowly, as well as to reduce the loss from the internal resistance of the machine; and the second, to avoid high working speed, which is always undesirable, for mechanical reasons. It will be observed that all of these requirements tend to the enlargement of the machine, especially of the armature.

These considerations lead to the conclusion that it is better to make the armature a little larger proportionally than it is made in large machines, in order that our very small motor may still have the proper amount of wire, etc., in the armature, and be a true dynamo, capable of giving a proper E. M. F., instead of being a mere electro-magnetic engine. By so doing we also make the armature much easier to manufacture.

There is now before the public a small motor,[1] of which we have some specimens here to-night, in which the armature is enlarged radially, somewhat out of the usual proportion of armature to field, whereby the comparative strength of the field is perhaps reduced a little; but the armature capacity is increased in a much greater ratio, and consequently the E. M. F., or magnetic pull of the machine is large, and the internal resistance, as well as the shaft speed, are small. In addition to this departure from the usual proportion in order to meet the difficulties of small motors, there are a great many special features to increase the convenience as well as the efficiency of the machine.

As I believe this motor to be the first one on the market giving an efficiency corresponding to large dynamos, and at a price proportionate within 25 per cent. of the established prices for large machines, I think a description of it will be of interest. (I may say here that later on some tests will be shown, and an opportunity will be given of examining the motors and apparatus.)

The field magnets are of the simple horse-shoe shape, and the armature is a Gramme armature of comparatively large diameter and short length. The Gramme ring gives room for a large number of windings, with small mass of iron to be magnetized, and the large diameter, compared with the length, gives greater circumferential speed, with the same windings and mass. The cores of the field magnets are of best wrought iron, $1\frac{3}{8}$ inches in diameter and three inches long. The yoke and pole pieces are of equal section with the core, as is also the armature core, thus forming a magnetic circuit all around the horse-shoe and across the armature, of uniform conductivity. The yoke and ends of the cores are cut clean by machinery, and firmly bolted together, and the iron fibre of the pole piece continues up into the core, both being in one piece and of equal section. The non-magnetic base plate extends around underneath, and forms a clamp for fastening the whole motor firmly to the edge of a table, a point of great convenience.

The armature is built up of about forty semi-circles of thin sheet iron, riveted together with two long rivets, into a solid ring hinged on one rivet, so as to open on the opposite side to receive the winding. These thin laminæ of soft iron are separated by tissue paper, to prevent the generation of Foucault currents, precisely as it is done in the largest and most efficient dynamos. The complete armature winding, previously formed by automatic machinery, is slipped on to this split ring, which is then closed, the open ends of the half circles fitting into each other when brought together, forming a mortised joint, which is then secured by driving a final pin or rivet through them. When this hinged ring is closed, the core forms a hollow cylinder three inches in diameter, $\frac{5}{16}$ inch thick, and two inches long.

The armature winding consists of a flat wire or ribbon, wound on edge into a single helix, the full length of which equals the circumference of the armature. The commutator, which is of the disc type, consists of seventeen copper sectors riveted to a fibre washer. The latter is attached to a cylindrical wooden block which is turned true with the shaft of the motor, and to a tight fit for the inside of the ring, after the winding has been slipped on it. This block and shaft are then forced into the centre of the ring, until the outer extremities of the commutator sectors are brought within about $\frac{1}{8}$ inch of the winding on the ring. The claw-shaped outer tails of the sectors are then bent together, pinching tightly certain loops of the armature helix, which project out further than the main body, for this purpose.

These high convolutions or loops are then soldered to the commutator strips, making a solid and extremely simple and reliable connection.

The armature shaft is mounted in bearings, which are screwed to both sides of the pole pieces. The brushes are each held by a single screw, which also makes the connection with the leading wire, and, with the co-operation of the bearing plates, holds the brush at the proper inclination. The armature of this motor has room enough for a winding, such as described, composed of 204 convolutions and of sufficient conductivity to carry twenty amperes, half of the current passing around each side of the armature. Therefore, we may say that the magnetizing capacity of the armature winding is 2,000 ampere turns. Of course, the size of the wire in the armature may be changed to suit the circuit, so as to give a higher E. M. F. and less amperes, and still utilize the same amount of volt amperes within this limit. Thus we may substitute for the 204 turns on the armature, 408 turns of wire of half the size, and still get the 2,000 ampere turns, when used on a ten-ampere circuit. The field is wound so as to carry the same current. The company is at present winding its motors with three styles of windings; the style designated A is adapted to be used on 20-ampere circuits, such as the United States Co.'s arc light circuits; another style, designated type E, is wound for 10-ampere circuits, such as the Brush arc circuits; and the third style, designated L, is wound for 100-volt circuits or thereabouts, such as the Edison incandescent circuits.

In regard to the power and efficiency of these motors, I have found that when running at 1,500 revolutions per minute, a moderate speed for motors of this size, and, therefore, taken as the basis of tests, the 20-ampere motor, or type A, with 20 amperes passing through it, shows a difference of potential between its binding posts of 7 volts, 5 volts due to counter E. M. F., and two volts due to resistance. This means 140 volt-amperes consumed in the motor, or a little more than one-sixth of an electrical horse-power. Under these conditions a Prony brake shows a pull of five ounces on a one-foot lever; that is two foot-pounds per revolution, or about one-tenth actual horse-power at 1,500 revolutions per minute. The windings for other circuits give results to correspond. Therefore, when the motor is running with all the current it can carry, it uses about one-seventh horse-power of electrical energy and gives about one-tenth horse-power of useful power, or 50 per cent of the energy used, allowing for slight additional losses, which is about double the efficiency of any

1. See ELECTRICIAN AND ELECTRICAL ENGINEER, February, 1887, page 65.

Digitized by Google

small motor which I have examined. And this performance is with a current heavier than can be carried by other small motors. When running with about three-fourths of this amount of current, or about 15 amperes, the efficiency is considerably greater, reaching about 60 per cent. This is the best working load for the motor, because the loss by the resistance of the machine is less. But when we get down to about seven or eight amperes we find that the efficiency falls again, owing to the approach to the limit of weakness in the field. And when we reach four amperes, we find there is just field magnetism enough to turn the machine.

The loss of this initial current of four amperes in charging the field, is unavoidable, on account of the necessity of having enough mass of iron in the field to use the full two thousand ampere turns that the motor has, when fully charged, without bringing the iron too near the point of saturation, or, in other words, to make the motor large enough to use ¼ h. p. of current, without passing the point of saturation. Hence we see that if a motor is intended for use with a small current, it is better to make the field magnets of smaller diameter. This is another illustration of the difficulties to be met in making motors which will be good under varying loads.

In regard to its use as a generator, the motor with 20-ampere winding will give about 5 volts when running at about 1,500 revolutions per minute, and as its current capacity is 20 amperes, this means, allowing ¼ volt lost by resistance, 90 watts, or about ⅛ h. p. of electrical energy in the external circuit. That is, enough to light a 16 candle-power lamp. By changing the size of wire and putting on sufficient convolutions to get a high E. M. F., we get a generated current of 1 ampere and 90 volts, sufficient for a 16-candle light, with a consumption of ¼ actual horse-power.

As the motor was originally designed for domestic use in running sewing machines with a battery, the current from which is necessarily very expensive, great stress was laid upon designing it so as to make the very best possible use of the current, for the sake of economical running, and also to make the motor as small and light as possible with the capacity required.

This latter consideration led to the immediate determination to use the very best wrought iron, and it is only by making these necessary elements of good construction the first consideration in their manufacture, that a motor of this surprising efficiency has been produced.

In proof of the correct design and success of these motors, it may be interesting to hear that the semi-automatic machinery which was originally made for their manufacture has been kept in operation continuously for the last three months without interruption, and that already over six hundred of the motors are in use.

DISCUSSION.

Mr. S. F. Shelbourne in the chair.

Mr. P. Diehl—I have made experiments on electric motors, and have succeeded in making various types. One of these I have placed on the market; but since then I have made quite a number of improvements. I have finally come to the conclusion that the armature to be put in this motor should have more sections. The one which I have been making has only four sections, and the sparking is considerable at the commutator, but I have lately produced various motors, especially one to run sewing machines, placing the motor directly within the sewing machine—that is, putting the motor entirely within the sewing machine wheel, so that nothing can be seen of it. It is on the end of the shaft, directly connected without any belting. There is a great gain in that, as you can do away with the friction of belting, which is considerable on a small motor. In those motors which I produced before, the armatures were too small. I have found that the armatures have to be enlarged. I have built armatures on the Gramme type, and I found for a small motor about three inches to be the best size. I have made armatures in sections, of two halves, which are of easy winding; the field is about the same as the one I previously made. The motor I intend for a sewing-machine has a field magnet, in the inside of the ring, which gives very good results. The wheel and motor together weigh about five pounds. The wheel is only the housing for the motor. For fans and for such purposes I have built it in a different shape, but I use the Gramme ring. I have come to the conclusion that it is a better shape than the T armature.

Mr. G. W. Mansfield—I certainly would speak most heartily in commendation of the ingenious methods which the C. & C. company have adopted and devised for overcoming some of the most difficult problems existing in the early constructions of small motors. Perhaps the main reason why the Gramme ring was not used for small motors at an earlier date was that the armatures could not be wound cheaply enough. The wire had to be threaded in through the little ring and out again by hand. The method adopted by the C. & C. company has certainly overcome that difficulty in a very nice way. I think they have started in on a sound theory—that small motors can be built as efficiently as large motors—there is hardly reason, why they should not. We all know that small steam engines can not be built to operate so efficiently as large steam engines.

Mr. Wing—I would prefer to listen a little longer and to ask a few questions before undertaking to address the meeting at length. One of them is the question of batteries, primary or secondary, or any other kind. Are any here prepared to answer as to any of the existing batteries being practicable for long periods of time, so that the purchaser of a small motor can afford to run it? I have investigated quite a number, and, so far, none of them have proved satisfactory. I would limit the question to three horse-power, one horse-power will do. If I sell a sewing machine, or a fan, or a lathe, or anything else, I want to know commercially how long I can guarantee that battery to run and how much it will cost to run it per day, per week, or per month.

Mr. Wheeler—I might perhaps give you some figures about the batteries we are making; but I think that in respect to the cost of running them, I should refer you to Mr. Crocker, who is one of the mechanical experts of the company, and who has more figures in his head than I have. I might say, however, that our battery is an electro-poion battery, having no porous cup. Instead of using carbon plates we use pencils. We use the regular electro-poion fluid, except that we supply the chemicals in solid form. Here (exhibiting) is some of the material, and if we add pure water to that and analyze the solution, we will get almost exactly what electrical dealers call electro-poion fluid. The amount of chemical energy in this solution is just the same as it is in the same volume of the ordinary electro-poion fluid.

Mr. Wing—I have found this difficulty in all those with which I have experimented, that when you come to take them commercially, there is the inconvenience of emptying the jars and replacing them.

Mr. Wheeler—Due consideration of that point has led to the production of a battery jar which has a very suspicious appearance (exhibiting a porcelain jar provided with a handle. Laughter). As that has about a tenth of a horse-power in it, I do not want to upset it.

Mr. Mailloux—How many sewing machine hours has it got?

Mr. Wheeler—It has got about six sewing machine hours. The electromotive force is 3 9-10th volts; the internal resistance is about 5-100ths of an ohm. When you begin to use it, it rises to about 15-100ths of an ohm, when the solution is mixed up with the acids of the reaction, so that the fair average is about 1-10th ohm internal resistance, and the capacity of the battery is 12 amperes. It will keep on furnishing 12 amperes without declining until the chemicals are all used up. It does not furnish 12 amperes to run a sewing machine for six hours, because a motor, when running a sewing machine, will use only about 8½ amperes.

Mr. Wing—Suppose you want to run five or six hours during the day and eight or ten hours at night, how many cells would it be necessary to have and how long would those cells last without replenishing?

Mr. Wheeler—Do you mean continuous running? You know if you give the machine to people, they will say that they use it continuously. The facts are that they sew for a minute; then they stop to shift the direction of their seam, etc., and the battery is not drawn upon. I have to make that distinction, because an absolutely continuous run is a very different thing from a "human being run," so to speak.

Mr. Wing—I am getting at the actual run, four hours during the day and an eight-hour run at night.

Mr. Wheeler—I think you would have to have jars of about twice the size of this. Of course, if you were not going to do the work at any greater rate than this, you could use the same solution and simply have larger jars. If I were going to do it, I should have another pair of jars ready, and slip them in when the first were exhausted. It is only a question of having enough solution there to keep it up for that length of time.

Mr. Wing—My experience is that I cannot sell a machine to run by jars in the ordinary form for the simple reason that they have to be changed too often, and it is too much work to change them. In running a sewing machine, as Mr. Wheeler observes, they run a minute and then they do not run a minute, and sometimes they do not run for ten minutes; but when you come to put this same motor upon a fan or lathe or machine that requires continuous running, the case is otherwise; the fan is probably

Digitized by Google

the worst thing you can put on to a motor, because it is a dead pull from the time you start it. Now, we sell fans largely for that purpose, and they want to be run about four or five hours for office business. Many thousands could be sold for ventilation of private residences, sleeping rooms, and the like, if we could get a battery, or if we could get the power at a moderate price to run those motors during the sleeping hours, say eight or ten hours, but it must be a steady run.

Mr. Pendleton—I think if the circuit were established from central stations, there would be no difficulty in running either a fan or sewing machine satisfactorily. At the present time you are obliged to do what you can with the best batteries in existence at the present day.

Mr. Curtis—I think the kind of fans Mr. Wing refers to chiefly are fans that require more than half a horse-power to drive them.

Mr. Wing—No sir; a thousand could be sold for that purpose at about one-eighth to one-fourth horse-power, for sleeping rooms. This motor has got the power for that purpose, as I can see from the speed at which it runs the fan here. One-eighth or one-fourth of a horse-power will do very well for sleeping-room purposes, and thousands will be sold for that alone.

Mr. Curtis—The power of one of these batteries is about 1-40 to 1-50 of a horse-power. Now, if you want 1-10 of a horse-power you would require four to six of these batteries. A tenth of a horse-power on a small motor is a good deal more than you would expect. When we were running it here, we were running from the Edison circuit, and we were taking about as much current as one of these lamps takes. We were taking a little more than a tenth of a horse-power.

Mr. Wing—A tenth of a horse-power is ample for the purpose I referred to.

Mr. Curtis—The question is whether somewhat less than a tenth would be enough.

Mr. Wing—It would be for smaller rooms.

Mr. Curtis—When we took up the problem we found that there was not any battery in the market which, unless we used a good many cells would give anything like the necessary current. Now, the only way to get the power out of that is by fulfilling two conditions. In the first place you have got to have large plates so that you do not draw a heavy current over a small surface. In addition to that, you have a very low resistance. As soon as the resistance of your batteries comes up, you have got to add cells. The resistance of the two cells is only 1-20th of an ohm, which is ridiculously low for a battery of that size. There is not any battery made to-day which is as low as 1-20th of an ohm for *one* cell, except a very large plunge battery. Now, the only battery which would take the place of this, that could be used to give the same volts and amperes before we got this up, was something like a Bunsen battery or an ordinary plunge battery. The difficulty with the plunge battery was that it would not maintain a current; there was no circulation of the liquid; and then if we put the plates nearer together, the circulation would form the sulphate of zinc on one plate and form the water on the other plate, and we could not maintain the action, and you had to stop and give it a rest and then start off again.

Mr. Wing—That has been my experience in all that I have tested.

Mr. Curtis—That is eminently the case in any form of battery where provision is not expressly made for circulation. In this battery we can get from about a square inch of surface about an ampere. You take a battery with a porous cell in it, or an ordinary plunge battery, and it will have perhaps 12 square inches to the half ampere. This battery will give from five to ten times as strong a current for a given area of zinc as any battery I know of. We seem to have got as near the limit of lowness of resistance as possible; unless you can lower the specific resistance of the solution, you cannot bring your plates any nearer; there is nothing intervening which you can take out and you have got the resistance as low as you can get it.

The only way in which you can get power enough out of this kind of battery to give you one-tenth of a horse-power is by adding cells or making larger cells. Now, you can do that easily enough. But nevertheless it involves having the cells four times as large or having four times as many of them. Then the domestic conditions come in; perhaps you can use it, perhaps you cannot. There is not any battery at all that it is worth while to talk about for a half horse-power, entirely irrespective of the cost of solution. The solution is quite a costly thing, anyway. The cell we employ will give a fortieth of a horse-power continuously for, say, six hours. That costs one charge of solution, and one charge of solution costs about 30 cents. So it costs 30 cents for six hours. There is no difficulty in obtaining all the power you want if the electric light circuits are there. We anticipate that all cities are going to have arc or incandescent circuits for domestic use, and we propose to put our motors on those circuits. You can put one of these motors in the place of one of these lamps here, as we do now, and it will give you a tenth of a horse-power.

Mr. Wing—Do you intend to build your motors for arc circuits?

Mr. Curtis—Yes; we have some already built. They are boxed up to protect them, that is, to protect the people outside of them from touching them and getting a shock.

Mr. Wing—Do you have to have any resistance coils?

Mr. Curtis—We have a shunt which controls them. They have a multiple arc with a variable resistance.

Mr. Wing—I have understood that you have already put some on the Brush circuit. Have you arranged with them as to charges?

Mr. Curtis—In some of the cities we have. We have not arranged in New York yet. The Brush people are trying it now. Mr. McGrath, who is superintendent of the district in New York, is trying it for his own station. I believe he says that they are just what they want for their circuits.

Mr. Wheeler—Mr. McGrath reports 45 per cent. efficiency on his circuit with this motor.

Mr. Wing—He told me they were prepared any time they got a motor that was satisfactory to them to put it in. I understand that in Baltimore the Brush people have agreed to furnish the Baxter motor with a horse-power at five dollars a month. They are doing it right along all the time, for one horse-power or ten little ones at the same rate. They are putting them in a great many places where they are using sewing machines.

Mr. Martin—In Philadelphia the Brush company are running about 200 small motors on their arc circuits.

Mr. Mailloux—I had recently occasion to experiment with various forms of batteries while conducting some researches with the new exciting liquid which has come into the market lately under the name of "coquimbite," and while experimenting with it, I had occasion to use some batteries which are made in Philadelphia by Partz, called the Partz acid gravity battery. It is a square cell in which the carbon is placed on the bottom. The carbon has a corrugated surface. He has one form which is simply a zinc, as in the gravity cell. In the other form, he has a porous cup with the zinc inside, and I have found that when the liquid was at the lowest specific resistance possible, the total resistance of the cell, carefully measured, was as low as $\frac{1}{100}$ ohm, and, consequently, anybody might think that you might obtain a very large volume of current; but unfortunately as soon as you close the circuit you find that there is only a very small current, comparatively speaking. You may get between five and ten amperes; but even that not for a great length of time, simply because you have the counter-electromotive force of polarization which immediately reduces the available electromotive force. I am told they are using these batteries with great success for dental purposes. They generally run them in series of three or four, and do not ask such a great rate of current of them and depend upon greater electromotive force to get a greater number of watts necessary. The cell is certainly a very convenient one, so far as construction goes, because it is so made that it will run without care and comparatively very little attention, for months. I have not carried out my experiments with the battery with the Partz solution, and consequently I cannot tell how long it will last; but it occurred to me that it was a very convenient form of cell, particularly for in-door use, office work, and places where the battery is to be tried for a certain length of time and where it is desired to have a battery that does not require much looking after. I succeeded in getting four amperes out of a coquimbite solution, and I was led to reason from that that possibly the other would give a higher current, and I think that some party I have met told me that Mr. Partz himself was using them a great deal for motors where the current continuously was from two to ten amperes.

Mr. Curtis—Dr. Partz tried it in my office and it would not maintain more than three.

Mr. Martin—This whole motor question resolves itself into a question of current. If once we have the motor, as we have, the question comes, where shall we derive the current to drive it? It is very apparent, I think, from this discussion, that the day of the primary battery in driving motors is not a very long one. Where shall we get the current then? We can get it largely from the arc light circuits; we can get it from the incandescent light circuits. There are 700 to 1,000 motors on arc circuits and a great many on incandescent circuits. Mr. Sprague, for instance, has a large number of small motors in Boston, 25 or 30, at least, running on the Edison three-wire system. But in order to put motors into residences and have them running when people want them, you want to have a current that is available all day long in a great variety of places. Hence, to get that current, it seems to me we must in the last resort fall back on the secondary battery.

Mr. Wetzler—Regarding the efficiency, not theoretical, but in a practical sense, I would like to call attention to a fact in regard to the construction of the armature of a motor. I am acquainted with a very well-known electrician who had started out to make a small motor of large efficiency, one which should approach the efficiency of the larger motors. He started out with a solid armature of the Siemens type. He got, I believe, 15 or 20 per cent. He tried all sorts of winding, etc. It occurred to him that it might be well to laminate that armature, which he did to a certain extent, and he obtained 10 to 20 per cent. more

Digitized by Google

efficiency. He kept on increasing the number of his laminations until he reached 60 per cent. Consequently, I would like to point out that the efficiency of a small motor must be looked for to a considerable extent in the lamination of the armature. I see in the armature before me that the attempt has been made; but it strikes me that it could be improved upon, if the suggestion is allowable. It seems to me that there may be some chance of the current getting across these sections.

Mr. Curtis—We made one test. We mounted one of those rings on a wooden block, without any winding of the armature, and ran it at a high speed, and we found that whether you turned the field on and off or not, that is, whether it was revolving in the magnetic field or not, made only a very small difference, and that was with an armature in which the laminations were only half as thin as they are there.

Mr. Wetzler—You had no windings on that at all.

Mr. Curtis—No windings.

Mr. Wetzler—You cannot say, then, that the conditions were exactly alike. Did you ever try a solid core with your actual windings on it? That would be a crucial test.

Mr. Curtis—No; that would be so vastly different from a solid core. Until you get up to a certain point the efficiency runs up very rapidly. Beyond that point the Foucault currents are so small that it does not pay to carry them much further. We considered the thing very carefully and I do not believe that there is over five per cent. lost at the very outside, by Foucault currents.

Mr. Wetzler—You will also remember that some time ago Mr. Mordey pointed out distinctly that the loss in the motors was due to that very cause, the Foucault currents. There is another point I want to bring up, and that is, do not you gentlemen consider it advisable to have some arrangement for reversing the motor? For many applications it is desirable that the motor should run in the opposite direction.

Mr. Wheeler—Do you mean momentary reversal?

Mr. Wetzler—To run a machine in either direction.

Mr. Wheeler—You can do that; you can change the field connection for one thing.

Mr. Wetzler—I mean to have your motor on your lathe or work table, and be able to turn a switch or any other mechanism, and have the motor run in the opposite direction.

Mr. Curtis—We have not had any demand yet for such a machine, and the principal purpose that has occurred to us for that kind of thing is for use on a boat.

Mr. Wetzler—I can see very well that there would be more than one application for that kind of motor. For instance, a dental lathe would want to be reversed.

Mr. Martin—I have had dentists ask me if I knew a motor of that type.

Mr. Curtis—One point about these brushes is that they are arranged so that the armature can be turned in either direction without destroying the brush.

Mr. Pendleton—I had some years ago a surgeon of this city making some experiments with an osteotome in my laboratory for the purpose of testing the power to be received from an accumulator, and for that purpose he brought down with him tibiæ, feet-bones, and so forth, and had his little saw attached to his surgical instrument which operated very satisfactorily; at least he said that he had never been able to get such results from any primary battery, and he had spent several thousand dollars in trying to perfect a system suitable for his purposes. I noticed that his instrument got upon a dead point several times and I asked him how it was. He said it was the best he could find. I then furnished him with a motor which has attracted some little attention, although it has never been put on the market to any extent. I have received letters from Paris in regard to the cut of it, which was published by the *Electrical World* some time ago. That little motor fulfilled its purpose and it was simply the commutation of two brushes upon a three-pole armature with the usual circuit, so that there was a continuous current through the two circuits of the armature, and the polarities gave on the three-pole armature all the attraction and repulsion that was capable of being derived. I finally conceived that it would be a benefit to use discs of thin iron, and my experience in the matter fully coincides with the remarks made here to-night. There was an efficiency of at least 25 per cent. merely from replacing the cast iron by the wrought iron. In regard to the loss by Foucault currents mentioned, this ring traveling in the periphery of the armature would not suffer from Foucault currents as much as the ordinary armature which is placed directly upon the shaft and having the speed of the periphery so much higher than the iron nearer the shaft. In that respect I should hardly think that 65 per cent. would be an overestimate. In regard to insulation, an insulation by peroxidizing this iron might be sufficient, instead of taking up the space with paper. These little motors are now becoming very interesting, and their importance will be appreciated so soon as we can get the current to introduce them generally; and, when the time comes, do not forget that the secondary battery will be a most valuable apparatus to regulate and govern these motors and economize at the same time the power which would be lost in any other method of governing.

CORRESPONDENCE.

NEW YORK AND VICINITY.

New Legislation for the Subway Commission.—Another State Commission Proposed.—Distribution of Telegrams in the Western Union Operating Room.—The Electric Motor Business.—Steam Heating and Power in Newark.—Sprader, of New Brunswick, Against Overhead Wires.—Mr. Edison's Health.

ONCE more the state legislature has been called upon to patch up its previous work which was supposed to be sufficient in itself to have caused all wires to be placed underground long ago. The commission was authorized to "devise," but it could not execute its plans without money, and the legal plan for obtaining money was in itself so defective that funds were not forthcoming even for the ordinary running expenses of the board. It would naturally be supposed that a law of this nature would provide effectually for drawing salaries if for nothing else. With the opening of spring, however, a very extensive programme of work has been proposed, and the telephone company at least will be ready to place its wires out of the reach of sleet storms, which twice this winter have ceased just in time to prevent serious damage to overhead wires of every kind. Provision has been made in a bill introduced in the legislature by Mr. Coggeshall, for creating a state board of three commissioners which shall have control of the telegraph, telephone, electric light, and district messenger companies.

The mechanical system for distributing messages in the main operating room of the Western Union company has now been in successful operation for over a month, and is giving perfect satisfaction. It is similar in principle to the cash carrying systems which have been introduced in many of the large retail stores.

The electric motor business is gradually assuming greater importance in the eyes of those who are already engaged in electric lighting, although they are very cautious in venturing upon a field which appears somewhat doubtful in its financial returns. Those who are familiar with the subject are however exceedingly confident that it offers greater inducements than the electric lighting industry; because of the almost unlimited field, while arc lighting at least cannot be extended beyond a very small percentage of the total amount of artificial illumination. The Third avenue surface railroad company will certainly make a mistake in equipping its line with a cable system when electricity stands ready to offer a far more complete solution of New York city's serious problem of rapid transit. When so great an expense is incurred a radical improvement should be made, and judging from personal observations and the testimony of careful observers, the cable is by no means so important an advance over horse power, as electricity bids fair to be.

The Newark Steam Heating and Power Company has purchased the old Nugent factory on Halsey street, Newark, and will put up new buildings and a large battery of boilers for the purpose of supplying steam power to the block bounded by Broad, Market, Washington and William streets. It is probable that the Edison company will occupy the rear of the premises. Some opposition has been manifested to the granting of franchises to the steam company without compensation to the city, as experience has shown that none of these companies devote sufficient attention to replacing the pavements in as good condition as before tearing them up.

Mr. P. Vanderbilt Sprader, of New Brunswick, N. J., is not in favor of granting unlimited privileges for electric wires, and expressed his determination to spend $5,000 if necessary, in order to secure the removal of wires which had been placed on buildings, so that they swung over his land. Mr. Sprader in a card to the local paper, calls the people to arms with the following vigorous appeal:

> Is the Electric Light Company, through their servant—that dirty, miserable liar, Wilson Stout Howell—to ride over the people and trespass on their property? Do the directors of this company understand and approve of his method of doing business? I understand that this is not the first time he has carried his wires over other people's land by sheer cheek and lying. Is he a worthy officer of a worthy company?

The wires have since been removed, and Sprader rejoices that he still lives in a free country.

Considerable space has been occupied in the daily papers, recently, regarding Mr. Edison's breaking down in health. It was reported that he was insane, and that no hopes were entertained of his recovery. It is well known among his friends that his life is devoted to inventing and experimenting. It is his recreation as well as his occupation. He has for many years drawn heavily on his stock of vitality, and nature has doubtless rebelled against it. He has not been as careful of his health as he should, and is paying the penalty. If he heeds the warning and cuts loose from laboratories, doing just enough to amuse himself, no doubt he will recover his full strength, but he is of course considerably older than when he first entered upon his career of invention, and should avail himself of his good fortune in being able to seek a change of scene, which will no doubt be of great benefit to his health.

NEW YORK, February 21st, 1887.

Digitized by Google

PHILADELPHIA.

The Electric Light Convention.—Suit of the Brooks Telegraph Construction Co. against the American Telephone and Telegraph Co., et. al.—Electric Railway Notes.—The Reading & Pottsville Telegraph Co.—Action of Councils on Electric Privileges.—Death of Mr. Joseph Christie.

SELDOM has a finer looking or more intelligent body of men assembled in this city than was gathered February 15th, in the annex to the Union League at the Convention of the National Electric Light Association. As an adjunct there was an exhibition of incandescent lights and electric motors in the Hotel Lafayette, where the officers and members of the convention made their headquarters. Not less than 156 firms, corporations and individuals are identified with the association. All the principal cities were represented.

In the convention sat two Japanese gentlemen. One of them, Mr. I. Fujioka, formerly professor of electrical engineering in the Imperial College, Tokio, visited this city during the Electrical exhibition in 1884. The other, Mr. S. Yoshima, is president of the Electric Lighting Company of Tokio.

A bill in equity was filed a few days ago in the United States Circuit Court on behalf of the Brooks Telegraph Construction Company (Limited), against the American Telephone and Telegraph Co., H. A. Pitcher, the manager of the same, and the American Telegraph and Telephone Co. of Pennsylvania, asking to have the defendants enjoined from the making of an alleged infringement upon the complainant's patented improvement in telephone circuits. The plaintiffs claim in the bill that they bought the exclusive right, under a patent held by David Brooks, the inventor, to make and use metallic circuits throughout the United States for a term of seventeen years from February, 1881; that they have expended large sums of money in perfecting the system, but that the defendants are violating this exclusive right. It is claimed that the rapid application of long-distance telephones to business purposes renders the prospective value of the ownership of the metallic circuit to be contested in the courts second only to that of the telephone itself.

It is reported that the Philadelphia Traction Company has finally successfully experimented with electricity as a motive power for their cars. The report is that motors are already being put in a number of the cars to supersede the cable in the spring, and that by degrees, if the new motor comes up to the expectation, it will be gradually introduced over the Traction system, beginning with the Darby Branch and other West Philadelphia lines that are not now cabled.

Reading railroad officials doubt if president Corbin contemplates a lease of the Reading and Pottsville Telegraph Company to the Western Union Co. as rumored. The receipts of the company are a considerable item of profit. The property is bonded at about $200,000. "It is usually unsatisfactory for a railroad company to conduct an express business, but there are many conducting extensive telegraph lines with profit," said a railroad man yesterday, "and there is no good reason why the line should be leased."

On February 3d, the electrical committee of councils reported favorably a supplementary ordinance to give the Penn Electric Light Company, of New Jersey, extended privileges. The board of highway supervisors also approved an amendatory ordinance authorizing the Penn Electric Company to construct additional conduits on Chestnut and other streets, the plan having been approved by chief Walker, of the electrical department. A similar application from the Edison company was postponed, in the absence of the necessary papers. The electrical committee of councils have passed favorably on an ordinance providing for the erection of 155 additional street lamps, to be located in various parts of the city.

The death of Mr. Joseph Christie, which sad event took place on the 9th day of the present month, will be greatly regretted. Mr. Christie was well known in telegraphic circles throughout the country, and at one time was correspondent for the ELECTRICIAN AND ELECTRICAL ENGINEER, in this city. Since, and until the time of his severe illness, he has been connected with *The Electrical World*, for which journal he performed valuable service.

PHILADELPHIA, February 17, 1887.

BOSTON.

The Telephone Case at Washington.—State Regulation of Telegraph and Telephone Companies.—The Legislature Invoked to Introduce an Electrical Police and Patrol Wagon System in Boston.—Gas Lighting Companies Seeking Franchise for Electric Lighting.—Electric Light Notes.—A State Electric Light Association.—The Boston & Albany R. R. try Electric Lighting in their Cars.—Ball of the Telegraphers' Mutual Aid and Literary Association.

THE suits against the Bell telephone at the Supreme Court, Washington, D C., have been the excitement for the month, not only in all the country, but especially in Boston, where the company "is found." There is more news abroad than there is at home in the matter, exemplifying the old law, if you want the news go away from home.

The sun is shining brightly just now for the legal haymakers, and it will take a good many telephone rentals to square their bills. The expenses of the Bell company are of course much larger than those of the appellants.

The Massachusetts legislature are not yet satisfied to allow the telephone business to live like other kinds of business; steps have been taken toward further legislation concerning the regulation and conducting of telegraph and telephone companies; as to placing telephone companies under the supervision of the railroad commissioners; as to establishing uniform charges for the use of telephones; for further limiting the amount of stock telephone companies may hold in branch companies; limiting telephone charges to $3 for each instrument.

In the state senate, on the 21st ult., a petition was received in aid of the petition of the police commissioners of the city of Boston, for authority to introduce and maintain an electrical police and patrol wagon system, signed by many prominent citizens, firms and corporations, and on the 4th inst. the committee on cities had the subject before them. Augustus Russ and Lewis G. Farmer appeared in behalf of a committee of citizens in favor of granting the petition, and city solicitor Bailey appeared for the city. The police commissioners and the captains of districts 1, 3, 5 and 6 were also present. Commissioner Whiting explained to the committee that the board, having failed to induce the city of Boston to move in this matter, had come to the legislature. He spoke at length of the advantages possessed by the system, saying that it would be more than an equivalent for an additional 100 or 150 men on the force. It was utterly impossible to get any bill for the system through the city government. When the commissioners went into office there was a restriction on the department's appropriations against the use of money for this purpose; this year they included an amount for the system in their estimates, but it was stricken out by the mayor. An appropriation of $200,000 would be sufficient, and no additional policemen would be needed. Mr. Whiting said that the adoption of the police signal system was recommended in three annual reports by the commissioners whom the present board succeeded. The system in use at South Boston was placed there at no expense to the city, and the commissioners are not under obligation to purchase that system in case it proved favorable. Mr. Whiting submitted testimony relative to the efficiency of the system in Baltimore. Commissioner Lee said that there was an average of one policeman to three miles of streets, and that it was utterly impossible for an officer to cover this area efficiently. It would be impossible to call the force together in less than three hours. Under the proposed system the whole force could be got together within three-quarters of an hour, fresh and ready for work.

Commissioner Osborne said the legislature deemed it expedient to take the control of the police from the city council, and he held that the board has now a right, if it wanted to test the matter in the courts, to introduce the system. The board came to the legislature because the city refused to pay the expense; because the city government was diametrically opposed to the metropolitan police commission. He suggested that the expenditure might be met out of the money received from liquor licenses. Last year $110,000 was collected in excess of any previous year's license receipts, while there were at least 500 less tippling places. The system could be introduced, he thought, at an expense of $150,000. The Gamewell people are ready to place their system here on trial. Captain Eldridge, of division 6, and other officers testified to the efficiency of the patrol wagons. The hearing closed with an elaborate argument by Mr. Russ for the petitioners.

There was a large gathering of parties interested in gas and electric lighting in the blue room on the 2d inst., when the committee on manufactures gave a hearing upon the petitions of several gaslight companies for authority to furnish electric light and power. It being understood that a general bill would be favored by the committee, some of the gas companies raised the point that certain special interests would be hazarded; and the representatives of the electric light companies objected to the subject-matter of the petitions upon the ground that the gas companies, so far as appeared, were mainly desirous to keep the electric light companies from extending their business. If a general law were passed, it should contain a proviso that the gas companies should not be authorized to furnish electric light where it is already furnished by another company. At the suggestion of senator Jefts, the committee adjourned for one week with the understanding that in the meantime the parties in interest should submit a general bill. Matters which cannot be included, it was said, might be met by special legislation.

On the 11th inst. the committee on manufactures continued the hearing in regard to a general law authorizing gas companies to furnish electric light and power. Mr. W. E. L. Dillaway submitted a new draft of the bill presented by him at the former hearing. The changes are mainly matters of detail. He submitted an additional section providing that after a gas company has begun to furnish the electric light, it shall file a statement with the gas commissioners, telling what it is doing, what system it is using, and what prices it is asking. He had omitted the

Digitized by Google

provisions contained in Mr. Greenough's bill relative to setting up poles, and that the mayor and aldermen of cities and selectmen of towns *shall* give permission to set up such poles, as those matters are fully covered by the statutes. The setting up of poles is a matter entirely discretionary with town and city officers. Mr. Goodrich, on the contrary, said that the local authorities are bound to furnish locations unless they are shown to be hindrances to public travel. Mr. Lane, of Leominster, protested in the name of the municipalities against permitting private parties setting up poles and running wires without the consent of the local authorities. Mr. Lane appeared for the selectmen of his town, of which he is chairman; but he was also a director and clerk of the Leominster Gas Light Company.

Mr. Samuel L. Powers of Newton, appearing for the Cambridge Electric Light Company, said this was a contest between the forty electric light companies, representing $3,500,000 of capital, on the one side, and the gas companies in nearly every town and city in the state, with a capital of $12,000,000, on the other. The committee is only concerned in so far as the interests of the people are concerned. Whenever the price of gas had been reduced it was owing to the competition occasioned by the presence of an electric light company. As is shown by the returns made to the gas commissioners, some of these gas companies paid dividends last year of thirty-six per cent. They must be content with smaller dividends, as will certainly follow if this matter of electric lighting be left open to competition. The gas companies, seeing the growing favor in which the electric light is held, are intent upon monopolizing the business by the utilization of their extensive plants and the power of their immense capital. They were afraid of the opposition of the electric light companies, which could furnish the light as cheaply as the gas companies, notwithstanding claims to the contrary. Testimony corroboratory of these statements was submitted by Horace B. Parker, president of the Newton Electric Light & Power Company; E. H. Ashcroft, of Lynn; Reuben Arey, master mechanic of the Naumkeag Steam Cotton Mills; and others. The hearing will be continued.

Of late there has been considerable discussion by members of the Somerville city council as to which company should furnish electric lights for the streets of that city. It is not unlikely that the Cambridge and Charlestown Gas companies, which now furnish the gas, will be awarded the contract for electric lighting.

An association has been formed, composed of most of the Electric Light companies of Massachusetts. The organization is to be known as the Massachusetts Electric Lighting Association, and the following gentlemen are its officers: President, James F. Almy, of Salem; vice-presidents, D. L. Mitchell, of Taunton and Jerome W. Hyde, of Springfield; treasurer and secretary, H. Burr Crandall, of Boston; executive committee, Edward S. Sears, of Boston, H. H. Fairbanks, of Worcester, and J. D. Flint, of Fall River.

On the evening of the 4th instant the Electric Light company of Woburn put into operation a Brush machine of 45 arc lamp power. All of the lamps have not yet been connected with the machine, but a number of them which were in working order were lighted on Main street. They gave great satisfaction. This company has had the incandescent light in operation for nearly a year. It will soon add to its plant power for lighting dwelling houses.

The Boston & Albany Railroad managers are experimenting with a system of lighting its cars with electricity. The first test was made on the 4.45 train on the Circuit road. The car No. 90 has been fitted up with 10 incandescent lamps of 25 candle power, while each platform is lighted by another lamp. The power or light is derived from storage batteries or accumulators placed in suitable receptacles under the car, and these storage batteries are said to be sufficient to supply the light 8½ hours. The Julien Electric Company, of New York, equipped the car.

The Electric Lighting and Power Company on the 26th ult. entertained 150 gentlemen of Newton at their light station on Crafts street, Newtonville. The speeches made after a collation had been served showed the general sentiment to be in favor of having the streets lighted by electricity.

The Lynn Gaslight Company contemplates establishing an electric light plant.

The Telegraphers' Mutual Aid and Literary Association held its second annual ball on the evening of the 4th inst., at Odd Fellows' Hall. There were about 400 couples present, and among the guests were prominent officers of telegraph companies in Boston, New York, Providence, Springfield, Lowell, Woonsocket, and other places. Congratulatory despatches were received from many places, including one from London, Eng. Music for dancing was furnished by the Boston cadet band. Mr John D. Mulloney was floor manager.

Electricity appears to be the coming "horse" that shall at some day not far distant be the motive power of the street cars of Boston. Officers of the different railroads have for several years given the matter much attention; at one time it was thought that the cable system, in successful operation in several cities, would be introduced here, but the rapid progress made by electricians in the way of perfecting motors has drawn to their work the careful investigation of railroad men, and some who had thought favorably of the cable system are now waiting for the results of experiments with electrical motors.

The opinions of several railroad presidents have been obtained by the *Boston Herald*. President Calvin A. Richards, of the Metropolitan Railroad, said: "I am thoroughly sincere in my expressed opinion that some other power will take the place of horses in the near future for moving Boston street cars. Electric roads are now running with more or less success in several cities. While the conditions regarding snow and ice are not precisely the same in any of them as prevail in Boston, the experts profess confidence in their ability to overcome all obstacles. Personally, I consider the 'storage battery' system one of the best, as it calls for no alteration of the roadbed, and applies its power directly to the wheels of the cars, thus obviating the great waste which must result from using any system where the power passes a long distance through a conductor from a central station. The apparatus will be out of sight under the car, and its extra weight of 2,500 pounds, instead of being an objection, will aid in securing necessary 'traction.'"

In regard to the cable system president Richards said, "I don't believe in it. I have investigated the system pretty thoroughly, and seen it operate in most of the cities where it is in use, and it does not impress me favorably. I am even sceptical as to its superior economy as compared with horses, though those who use it declare that it is much cheaper. It costs an immense sum to put in the plant. It would take a million or two, to begin with, to alter the Metropolitan road so that we could use it. Expensive machinery is required, and the cables are costly and easily broken. Some of the western roads run two cables, in order to make lightning changes in case of accident. The 'grippers' wear out fast."

President Hersey, of the South Boston company, said: "The cable seemed to me a great improvement, though having several objectionable features; but recent developments in electrical appliances are such that I should not think of putting in a cable road before some of the new plans have been tested."

President Cummings, of the Cambridge Railroad, and president Whitney of the proposed Suburban Street Railway, also spoke favorably of the prospects of electrical motors for cars.

BOSTON, February 17th, 1887.

CHICAGO.

The Old and the New in Fire Alarms.—The Telephone Suits.—The City Electric Light Plant.

THE old and the new forms and methods of fire alarm matters in Chicago, show what an improvement has been made—what an advance the column of the electric army has made—in a comparatively few years. True, from 1863 to 1887 is nearly a quarter of a century; but steamboats go but a very little more rapidly than they did in the sixties. Whether we grant that electricity in this particular branch has more than kept pace with general advancement in the arts, in science or manufactures, the following from an interview with Prof. Barrett, will have a certain interest.

"It was in 1863," said Prof. Barrett the other day, "that I first went on watch in the tower. It was on top of the old court house on Clark street, and was about 150 feet high from the ground, I guess. Our room was near the top, and was walled around with glass, so that the whole city could be seen. Above us was the belfry, and we used to ring the bell, that was cut up into so may relics of the big fire, by means of a lever. The city then was divided into six districts. When a fire was discovered, the watchman would first strike eight on the bell and then follow with the number of the district in which he thought the blaze was located. All the engines were supposed to pass the court house on their way to a fire, and as they passed the drivers would look up toward the top of the tower where the watchman displayed a red flag pointed in the direction of the fire. You would be surprised to know how accurate our alarms were. We very seldom sent an engine to the wrong location. Of course the city was very small then, and we knew and could see nearly every house. Nevertheless, it required a pretty sharp eye to see where a fire was on a dark, cloudy night, especially during the winters, when the frost coated the glass. We had a rustling fire department though. It was as good as any we have ever had. I stayed in the tower till the fire alarm telegraph system was adopted in 1865, when I was put in the office. When I went on there were two brothers there named Joyce, but they left and other men took their places. The job was often given to old firemen. One of these afforded fun for the whole town for a week. He napped at his post during the evening, and when he awoke the sky was all aglare in the east, and he thought Wabash avenue was burning. He turned in an alarm right away, and all the men went down on the lake shore looking for fire. They found nothing except that the moon had risen and was still looking red and hazy through the fog. The moon fooled the watchman. After a time the city got too big for such a provincial system, and the smoke from the factories obscured our sight. Then the fire alarm

Digitized by Google

telegraph was introduced. Old U. P. Harrison was the chief engineer who appointed me."

There is now and then a sigh of relief when the telephone suit is spoken of, when the thought comes up, that in a comparatively short time somebody will be declared winner, and there will be an end to pretense, claim and assumption on the part of the original and only, or the other original and only. "Which is the murderer and which is the victim," as the chap asked of the delineator of a "wax figger show." Artemus Ward once remarked that there are two things in this world for which we are never prepared; one of these is twins. The other he never told, but a spiritualistic friend has learned that it is the finding we are to have in the case of the United Swindle *vs.* the Bell Telephone Co.

Wandering back, mentally, to the City Hall, there is to be some change in our city plant, which is an Edison. The battery of dynamos now consists of two 300 light and two 400 light machines, a total capacity of 1,400 lights. This will be increased to two of 500, and two of 400, or a total of 1,800 lamps. A natural query is, "what are you going to do with the old ones?" Well. The city has just completed a tunnel out into the lake about 1,800 feet, which is connected to the north side water works. Through this underneath route a kind of duplexed conductor has been laid in the solid masonry, leading from the shore to the farther end, where they will terminate in a light house 75 feet high, and a motor for ringing a 1,000 pound bell in thick or heavy weather. One return wire (two conductors) and two outgoing wires with proper switches will handle all this at the shore station, and the lanterns, a combination of ten 50 c. p. lamps, may be lighted, or the little tea bell, as the river men call the monster, rung, separately or together at will. The other dynamo will be relegated to the west side water works, where it will do the lighting, and perhaps some light motor work. Then too, the new fire boat is to be equipped with a combined arc and incandescent system, with an apportionment of lights on tripods for illuminating at fires, and three lights on the vessel, while the interior will be lighted with glow lamps. At one or two fires we have had the benefit of an electric light in a dark alley, and it is a great help to the firemen.

CHICAGO, February 20, 1887.

ELECTRICAL NEWS AND NOTES.

THE ELECTRIC CLUB.

The meeting of the Electric Club of New York, February 3d, filled the club rooms at the Hotel Dam with the customary large number of gentlemen interested practically and commercially in electrical matters.

After the excellent dinner was disposed of, Mr. Henry Hine read a paper entitled "Electricity and Insurance." In the course of his forcible remarks Mr. Hine said:

"The insurance companies should not be blamed for their conservative course in the past, and when we consider the phenomenal development of electric lighting, its widespread use and the tremendous forces which are so freely handled in its generation and distribution, too much praise cannot be given the electric light companies that so little damage has been inflicted on life and property. To-day I believe that all the insurance associations, admit that the electric is as safe as other lights, and some go even farther and do not hesitate to say that it is much safer when properly installed. Now this is all that the electric light companies claim. We not only freely admit, but take pains to publish the fact that great danger would attend imperfect and careless equipment, but we emphatically assert that such work has not been the rule, and that as installed to-day by the reputable companies, an electric light system whether arc or incandescent, isolated or central station, continuous, pulsating or alternating current, contains fewer elements of danger than lighting by gas or oil."

The reading was followed by an interesting discussion.

The Electric Club, with its handsome rooms, hospitably open to electricians visiting the city, its monthly dinners and discussions, and its membership of active men in various fields of electrical work, has become a very useful and attractive organization.

STORAGE BATTERY LITIGATION.

Suit has been begun in the United States Circuit Court by the Brush Electric Company, of Cleveland, Ohio, against Charles D. P. Gibson, of New York city. The suit is founded on the claim of the Brush company that the Gibson storage battery is an infringement upon certain letters patent of the United States owned by that company. Subpœna to appear and answer is made returnable on the first Monday of March. The suit is brought on letters patent of the United States, No. 266,090, issued October 17th, 1882, No. 337,298 and No. 337,299, issued March 2d, 1886. This suit is said to be only the beginning of a general attack upon infringers of the Brush patents, and is likely soon to be followed by interesting developments.

THE TELEPHONE.

The arguments in the appealed telephone cases before the Supreme Court at Washington, were concluded February 8th. Their hearing occupied the time of the court for a fortnight. The judgment of the court will probably not be given for several months.

It is reported that the New York, New Haven and Hartford R. R. Co. has contracted for the introduction of the Phelps induction telegraph, for communication with moving trains, upon its road.

Italy.—Destruction of Telephonic Plant.—The director of the telephones in Genoa has issued a notice saying that the offices must be closed, the damages caused by the recent snow-storm amounting to more than £80,000.

LONG-DISTANCE TELEPHONY ABROAD.

The telephonic communication now existing between Paris and Brussels excites much interest. It is the first international line in Europe, and it is the longest yet attempted. An an example of long-distance telephony, it claims attention by reason of the difficulties which have been overcome. Special bronze wires were erected, and through these intercourse may be carried on with the greatest ease. The Brussels-Paris line is about 200 miles in length. That from Lille to Paris is 150 miles. Besides these two, there is a line from Paris to Reims, another from Rouen to Havre, another from Rouen to Elboeuf and Louviers, and some others of less importance.

A STATE ELECTRICAL LABORATORY FOR FRANCE.

The French government has decided to establish "a central laboratory of electricity," under the direction of the minister of posts and telegraphs. M. de Nerville has received the appointment of director of the new institution, although nothing has yet been decided as to the exact organization and functions of the establishment. It is, however, probable that the verification and calibration of electrical instruments will form the chief part of work undertaken, and it is hoped that a department for special research will also be included. A commission is to be appointed to determine these matters.

ELECTRIC LIGHT AND POWER.

Domestic.

In the *Electrical World*, Mr. T. C. Martin figures up that there is now invested in the electric light industries, of this country, on a cash basis, the total sum of $150,000,000.

The Ball Electric Light Co. has elected the following trustees: Messrs. Frederick Lovejoy, John C. Noyes, Chas. E. Ball, James H. Breslin, Robert Dunlap, William L. Brown, D. W. C. Wheeler, George W. Cotterill, Sol. Sayles, Wm. S. Hopkins, H. W. Spang. The following have been elected officers: President, Frederick Lovejoy; vice-president, John C. Noyes; secretary, G. P. Whitney; treasurer, Robt. Dunlap; electrician, Royal E. Ball: mechanical manager, Chas. E. Ball.

Salem, Ind., will be lighted by electricity. J. F. Persise, B. T. Race, L. O. Saltmash, and Charles May are interested.

Thomas Knowlson, West Troy, N. Y., will establish a new electric light plant.

The Lynn Gas Light Co., Lynn, Mass., contemplates establishing an electric light plant.

An electric plant will be established in Easton, Md. President, P. S. Reed.

The Electric Light Co., Asbury Park, N. J., contemplates establishing a plant at Red Bank.

West Grove, Pa., will be lighted by electricity. Address E. B. Gauthrop.

It is reported that Cairo, Ill., will be lighted by electricity. E. W. Halliday is interested.

Canastota, N. Y., will be lighted by electricity. Fred. C. Fiske, president.

Fayetteville, N. C., will be lighted by electricity. For further information address James D. McNeil or E. L. Pemberton.

Palmyra, N. Y., will be lighted by electricity. W. A. Powers is interested.

Mobile, Ala., is advertising for electric street lamps.

Rome, Ga., will have a new electric lighting plant. Mr. J. W. Rounsaville can give particulars.

The Kansas City Electric Light Co., Kansas City, Mo., will erect a complete plant, arc and incandescent system. J. S. Chick, president of the company, can give particulars.

The Concord Gas Light Co., Concord, N. H., will introduce electric lighting.

Digitized by Google

The Ann Arbor Thomson-Houston Electric Co., of Ann Arbor, Mich., has been incorporated, with a capital of $50,000, and Messrs. Wilbur F. Davidson, of Port Huron; E. J. Dickey, of Detroit, and A. L. Noble, of Ann Arbor, as incorporators.

The Wheeling Electric Co., Wheeling, W. Va., is enlarging its incandescent plant.

Lowenstein Bros., Memphis, Tenn., will put a 90 light arc plant from the Western Electric Co., in their new wholesale dry goods building.

The Western Electric Co. has received an order for an arc plant of 180 lights from the Lake Gas company, town of Lake, Ill.

Paola, Kan., has granted a franchise to the Sperry Electric Light, Motor and Car Brake Co., and a Sperry plant will be put in.

The Ottawa, Kan., Electric Light and Power Co. has contracted with the Heisler company of St. Louis, for a 150 light incandescent dynamo and complete outfit. The lights are of 30 c. p.

Treasurer E. I. Frost, of the St. Paul Gas Co., St. Paul, Minn., says the American system of electric lighting is giving the best of satisfaction, and that he expects to more than double his capacity this year. An additional 50 light machine and lamps were shipped recently to him by the American company.

The Brush Electric Light Co., New York, are busy erecting their new station on Elizabeth street. They are setting 10 tubular boilers with the Jarvis boiler setting and Sheffield grate bars. This company was the first local electric light company to be formed in the world.

The Western Electric Construction Co., of St. Louis, have successfully completed Edison central station plants in the towns of Topeka, Hutchinson and Abilene, Kansas. The Topeka station has a capacity for 5,000 lights; the Abilene, 4,500, and the Hutchinson, 1,900. The Topeka plant started with a load of 2,000 lights, and the Hutchinson, and Abilene with about 1,000 each.

The Holroyd Smith system of operating street cars by electricity, now in use successfully at Blackpool, England, is offered for introduction in this country.

The Sprague motor has been so successful in transmitting power over wires, in Boston, and running elevators, printing presses and other machines requiring from 1 to 20 h. p., as to create a demand for electric power beyond the capacity of the present arrangements. It is said a Sprague power station will soon be started at the north end of Boston for furnishing power alone.

The Van Depoele company has a contract for a large new electric road at Binghamton, N. Y., and is busy on the Montgomery, Ala., road. The Appleton, Wis., road is to be enlarged.

The Mount Adams and Eden Park street railroad company, Cincinnati, O., operating lines on Walnut Hill, have decided to make the Oak street line an electric road, and changes to accomplish that result will be made at once. It is understood that this is for an experiment, and that, should it succeed, electricity will be used largely on street railroad lines in that city.

Mr. E. H. Johnson, president of the Edison Electric Light Co., has had a set of cells from the Electrical Accumulator Co. installed in his house. Formerly the engine driving the dynamo was stopped at midnight, after which gas was employed. With the accumulators added to the plant the electric light is available at all times, much to the gratification and comfort of the owner.

The interior of the Washington monument is now lighted by the incandescent light of the U. S. Electric Lighting Co.

Foreign.

Austria.—There are seven distinct stations for the supply of electricity projected for Vienna. These are the following:

1. A central station at Neubad for running 15,000 glow lamps in the shops and dwelling houses of the inner town; contractor Herr Fischer. 2. A central station in Blutgasse, close to the St. Stefan's Cathedral, also with 15,000 glow lamps distributed in various newspaper offices, shops, some private houses, and the government printing offices; contractors, Messrs. Siemens & Halske. 3. A small central station close to the Union Hotel, where accumulators will be used, the number of lights not yet ascertained; contractor, Mr. de Calo. 4. Imperial Continental Gas Association, close to the new Burg Theatre, for 14,000 glow lamps, worked by steam engines and direct driven dynamos in conjunction with a series of accumulators; the light will be used in the two principal theatres, the Opera House, the Emperor's Palace, and the offices of the gas company; contractors the Gas Company. 5. A small central station in the Paniglasse, for a number of glow lamps distributed in the neighborhood; contractors, Messrs. B. Egger & Co. 6. A central station in the suburb Mariahilf, for 12,000 glow lamps; steam power, 1,000 h. p.; there will be 12 dynamos, each giving 480 amperes and 125 volts; contractors, Messrs. Kremenezky, Englander & Leistler. 7. A central station at the water works in Nussdorf; number of lamps not yet ascertained; here transformers on the Zipernowsky system will be used. The realization of these various projects is, however, to a certain extent, retarded by the action of the municipal council, who, in their jealousy of allowing the development of anything approaching a monopoly, go a long way towards making improvements of any kind impossible. The conditions to which electric light contractors are asked to submit are very onerous; for instance, the gas company are asked to pay a rental for the right of way for their street mains of 1 kr. (about $\frac{1}{5}$ of a cent) per annum for every yard of conductors, and for every service lead between mains and houses 1 fl. per annum. In addition, they are asked to hand over to the town 5 per cent. of their gross income from the sale of electricity. It is further proposed that, by giving a year's notice, the town can at any time compel the company to sell them the undertaking.

A warm debate took place in the Vienna town council on the 13th inst. on the question of granting a concession to the Imperial Continental Gas Association for a central station to light the Court theatres by electricity, when some very hard words were said of this and other English companies generally. The concession was nevertheless granted for 20 years by a majority of 51 to 15.

Belgium.—A company has acquired the concession for lighting the town of Contich at the following charges:—

For Installation (Incandescence).

1 to 5	lamps at	20 francs	per lamp.
6 to 25	"	18 "	"
26 to 50	"	16 "	"
51 to 100 and over	"	13 "	"

For Supply of Light (Incandescence).

4 centimes	per hour, per lamp of	8 to 10 candles.
7 "	"	16 to 20 "
12 "	"	40 to 50 "

Arc Lighting.

40 centimes	per hour, per lamp of	500 to 1,000 candles.
50 to 55 "	"	1,500 to 2,500 "

England.—The rate-payers of Penzance have given an opinion in favor of the electric light. The next question for them will be as to the manner in which they will carry out their desires. It is said to be probable that a suggestion will be made to the corporation that they should themselves become an electric light company, and undertake the duty of adequately illuminating the town, which has so long been doomed to semi-darkness. For an outlay of about £4,000 a double plant could be obtained, sufficient to light 60 lamps. Thirty of the lamps could be used for street lighting, and the remainder be let out for shops and public buildings.

Hungary.—The old fortress of Temesvar, in the south of Hungary, was one of the first towns that adopted the electric light. An installation of incandescent street lighting was started on the 30th November, 1884, with 731 Lane-Fox lamps, worked by Brush dynamos of 1,500 volts pressure. Some of the lamps are, *Industries* states, still in use, having lasted for 6,500 hours, and it is satisfactory to note that, notwithstanding the high pressure employed, there was, during the whole time, not a single accident, nor any serious breakdown. Encouraged by this success, the corporation of Temesvar are now considering a further application of electricity, for the purpose of working their tramways by electric motors. The project is to run street cars fitted with accumulators, which would be charged at the electric light station during the day, and in this way the generating plant would be kept more fully employed, and thus made to yield an additional profit.

Russia.—The municipal council of St. Petersburg has, after long discussion, decided in favor of continuing the electric lighting of the Novsky and of the Grande Moskaia. The contract has been let to the firm of Siemens & Halske, who have received a concession for twelve years for the electric lighting of private houses, and also the right of establishing four electric stations at a rent of £80 each. In consideration of these privileges they charge for the public lighting of the two streets above mentioned 17 cop. (about 4d.) per hour per light.

Scotland.—The Glasgow Tramways Co. desires powers from Parliament to work its road with electric motors.

Spain.—A company called the "Electro-Dynamic Association of Carsi, Mari & Co.," has been formed in Valencia, with the object of utilizing water power to be obtained at the Falls of Chulilla on the river Turia, situated at a distance of 56 kilometres from Valencia. It is proposed to erect the generating machines at the village of Torzuilla, whither the water power will be conducted by a subterranean canal of 1,762 metres and an open one of 741 metres. It will be also necessary to construct dams, sluices, flood gates, accessory canals, turbines, &c. Observations have shown that the power obtainable varies from a minimum of 2,000 h. p. in summer to a maximum of 3,500 in winter. The experiments lately effected by Mons. Fontaine with Gramme machines, resulting in the transmission of an industrial return equal to 52 per cent. of the original force, have encouraged the company to rely upon an effective working power of at least 1,000 h.p., which will be used for public and private electric lighting, and as motive power for various descriptions of machinery.

Digitized by Google

NEW INCORPORATIONS.

The Electric Light and Power Co., of St. Louis, recently incorporated under the laws of Illinois with a capital of $1,000,000, are developing an electric storage battery system with a view of supplying electric energy for domestic and commercial lighting, and for all purposes for which power is used. The system, invented by Sylvanus L. Trippe, is said to have been tested on several occasions to the satisfaction of the incorporators, who are D. P. Slattery, J. L. Huse, Edwin S. Chester, James F. Ewing, and the inventor. Practical applications will be made in the moving of street cars in St. Louis at an early day, it is said.

The Hartford Light and Power Co., Hartford, Conn. Capital stock, $10,000. David Henry, and others, incorporators.

The Lake View Electric Light Co., Lake View (P. O. Chicago), Ill. Capital stock, $100,000. William Vogel, and others, incorporators.

The American Illuminating Company, Mt. Vernon, N. Y. John Dawson, and others, incorporators.

The Western Electric Light and Power Co., Toledo, Ohio. Capital stock, $200,000. John T. Kinnler, and others, incorporators.

The Empire Safety Light, Heat and Power Co.; the Manhattan Safety Light, Heat and Power Co., and the National Safety Light, Heat and Power Co., of New York city, N. Y. Capital stock, $5,000 each. Caleb W. Jackson, Pittsburg, Pa., and others, incorporators.

The Latrobe Electric Light Co., of Latrobe, Pa. Capital stock, $12,000. Treasurer, Joseph C. Head, Latrobe.

The Safety Electric Light and Power Co., New York city, N. Y. Capital stock, $250,000. Herman H. Westinghouse, and others, incorporators.

The Electric Light Construction Co., Albany, N. Y. Capital stock, $50,000. Wm. Headlam, and others, incorporators.

The Mutual Electric Light Company, Chicago, Ill. Capital stock, $100,000. James E. Purnell, and others, incorporators.

The Moberly Electric Light and Power Co., Moberly, Mo. Capital stock, $50,000. Henry T. Fort, and others, incorporators.

The Ries Electric Railway Manufacturing Co., Portland, capital stock, $1,000,000, has been incorporated. President, Robt. F. Straine, Sr., Boston, Mass.

The Globe Electric Light and Power Co., of Minneapolis, Minn., for the manufacture of electrical machinery and supplies. Incorporators are: B. F. Hanscom, J. Collicott, W. S. Laton, J. A. and F. N. Dunsmoor, R. S. McCurdy, C. H. Hunter, A. W. Armitage, J. Van der Horck, and W. Hallowell. Capital $500,000.

The Railway Electric Car Lighting Co. of Chicago. Capital stock, $100,000. J. J. Veeder, and others.

The Seaweed Carbon Co. has been incorporated at Portland, Me., with a capital of $200,000. It is composed of Massachusetts men, with Edgar Shaw, of Lynn, at the head, and will develop the new inventions of Mr. Shaw, for making carbon for electrical purposes out of the common seaweed stuff of the sea.

MANUFACTURING AND TRADE NOTES.

The Edison machine works have changed their salesroom from 121 Chambers street to 19 Dey street, New York.

PERSONAL MENTION.

It is understood that the Hon. Hiram Sibley is to enlarge his munificence to Cornell University by a further gift of a quarter of a million dollars. The money is to be used for improving and extending the Sibley College of Mechanic Arts. A large building is to be constructed to the east of the present structure early in the spring, and provision made for the instruction of many additional students in technical and mechanic arts.

INVENTORS' RECORD.

Prepared expressly for THE ELECTRICIAN AND ELECTRICAL ENGINEER, *by* Pope, Edgecomb & Terry, *Solicitors of Patents for Electrical Inventions*, 11 *Wall Street, New York city.*

CLASSIFIED LIST OF UNITED STATES ELECTRICAL PATENTS.

From January 18 to February 8th, 1887 (inclusive).

Alarms and Signals:—*Automatic Heat Indicator and Distant Alarm*, W. Gee, 356,360. *Electrical Call Box*, G. S. Nickum, 356,418, January 18. *Electric Clock Alarm*, M. M. Smith and F. P. Jones, 356,605, January 25. *Electrical Call System*, J. D. Peachey, 356,850. *Electrical Method of Detecting Water Overflows*, L. Well, 357,056. *Electric Signal for Engines*, J. C. Ricketson, 356,792. *Alarm for the Protection of Graves*, W. H. Farnham and C. B. Askew, 356,756, February 1. *Electrical Burglar Alarm*, G. Schleicher, 357,416. *Thermostat*, J. L. Campbell, 357,463, February 8.

Conductors, Insulators, Supports and Systems:—*Underground Conduit for Electrical Conductors*, J. F. Munsie, 356,151. *Conduit System for Electric Conductors*, same, 356,152. *Electric Wire or Cable Distributing System*, same, 356,153. *Insulating Telegraph Cables*, W. R. Patterson, 356,156. *Manufacture of Telegraph Cables*, same, 356,206. *Method of Insulating Electric Conductors*, same, 356,207, January 18. *Insulated Ball-Joint*, J. A. Bunnell, 356,614, January 25. *Insulating Underground Electric Conductors*, D. Brooks, 356,981, February 1. *Electrical Distribution*, W. B. Harvey, 357,280, February 8.

Dynamos and Motors:—*Dynamo-Electric Machine*, S. H. Short, 356,667, January 25. *Commutator-Adjuster for Dynamo-Electric Machines*, C. L. Buckingham, 357,115. *Armature for Dynamo-Electric Machines*, E. Thomson, 356,902, February 1. *Commutator for Dynamo-Electric Machines*, G. Westinghouse, Jr., and A. Schmid, 357,295, February 8. *Electric Motor*, P. Diehl, 356,576, January 25; W. W. Griscom, 356,834; E. J. Houston, 356,878, February 1. *Electro-Magnetic Motor*, W. H. Darling and L. Bock, Jr., 357,374, February 8.

Galvanic Batteries:—*Primary Voltaic Battery*, J. E. Pearce, 356,261, January 18. *Galvanic Cell*, N. W. Perry, 356,727, January 25. *Galvanic Battery*, S. A. Chase, 357,550, February 8.

Lamps and Appurtenances:—*Electric Arc Lamp*, A. Harding, 356,282, January 18; E. Thomson, 356,903; H. L. Pyle, 356,786 and 356,788, February 1. *Incandescent Electric Lamp*, W. Holzer, 356,199, January 18. *Dash-Pot for Electric Arc Lights*, C. E. Scribner, 356,211, January 18. *Supporting Frame for Electric Lamps*, H. H. Fairbanks and W. H. Coughlin, 356,580, January 25. *Terminal for Incandescent Lamps*, M. M. M. Slattery, 356,795. *Apparatus for Manufacturing Carbons*, J. T. Lister, 356,879, February 1. *Switch and Holder for Incandescent Electric Lamps*, W. Hoekhausen, 357,385, February 8.

Miscellaneous:—*Electrical Elevator*, N. P. Otis, 356,496. *Lightning Rod*, C. H. Grimes, 356,531. *Electric Cut-Out*, J. Fuchs, 356,632. *Electric Valve*, W. S. Johnson, re-issue 10,802, January 25. *Automatic Electrical Signal Coupler*, J. S. Copers, 357,165. *Process of Purifying Gas-Carbon*, F. H. Snyder, 357,108. *Automatic Electric Cut-Off for Water Pipes*, L. Well, 357,055. *Lightning Protector for Electrical Conductor*, J. H. Vail, 357,050. *Electrical Weighing Scale*, W. M. Hunt, 356,940. *Fire Extinguishing Apparatus*, W. Harkness, 356,875. *Device for Displaying Advertising Cards*, J. Stonitsch and W. F. Sweet, 356,805. *Contact Piece for Electrical Apparatus*, M. M. M. Slattery, 356,796, February 1. *Life Detecting and Preserving Apparatus*, W. H. Farnham and C. B. Askew, 357,190. *Electric Cut-Out*, O. B. Shallenberger, 357,293. *Instrument for Transmitting Audible Time-Signals*, J. R. Etter, 357,310. *Electrical Fare-Box*, W. A. Crowdus, 357,372, February 8.

Railways and Appliances:—*Electric Locomotive*, H. Erhardt, 356,579, January 25. *Electrical Interlocking Mechanism for Switches and Signals*, G. Westinghouse, Jr., 357,109. *Method of Operating Electric Brakes*, E. E. Ries, 356,964. *Circuit Closing Apparatus for Electric Brakes and Other Devices*, same, 356,963, February 1. *Electric Railway Signaling*, G. Westinghouse, Jr., 357,296. *Electro-Magnetic Attraction Device for Cars*, J. B. Atwater, 357,516, February 8.

Secondary Batteries:—*Electric Accumulator*, C. B. De Montaud, 356,390, January 18.

Telegraphs:—*Autographic Telegraph*, J. H. Robertson, 357,038 and 357,039, February 1.

Telephones, Systems and Apparatus:—*Telephone*, E. H. Johnson, 356,688 and 356,689, January 25. *Telephone Transmitter*, W. C. Barney, 357,359; F. Blake, 357,452, February 8. *Telephone Receiver*, E. T. Gilliland, 356,197, January 18; W. C. Barney, 357,360, February 8. *Krotophone Receiver*, F. C. Watkins, 357,054, February 1. *Mechanical Telephone*, G. W. Lord, 356,594, January 25. *Telephone System*, A. M. A. Beale, 356,300, January 18; J. O. Stockwell, 357,134, February 1. *Test Circuit for Multiple Switch-Board System*, C. E. Scribner, 356,425. *Multiple Switch-Board Test Circuit*, same, 356,426. *Factory Telephone Exchange*, same, 356,427, January 18. *Automatic Telephone Switch*, F. C. Watkins, 357,051. *Telephone Signal*, same, 357,052. *Telephone Hook*, same, 357,053. *Multiple Switch-Board System of Telephone Exchanges*, E. P. Warner, 356,859, February 1. *Telephone Support*, S. Rosenblatt, 357,337. *Spring-Jack Switch*, C. E. Scribner, 357,538. *Metallic Circuit for Multiple Switch-Boards*, J. A. Seely, 357,539. *Local Battery Circuit for Multiple Switch-Board Systems*, same, 357,540, February 8.

OKONITE

TRADE MARK.

CHAS. A. CHEEVER, Pres. WILLARD L. CANDEE, Treas.

The Okonite Company,

MANUFACTURERS OF

Underground, Aerial and Submarine

Insulated Wires and Cables,

No. 13 Park Row, New York.

MITCHELL, VANCE & CO.,

GAS FIXTURE MANUFACTURERS,

Have added a department for the Manufacture of Electroliers and other fixtures adaptable to any system of Incandescent Electric Lighting, also Combination Fixtures for both Gas and Electric Light.

Estimates and designs furnished upon application.

836 and 838 BROADWAY,

NEW YORK.

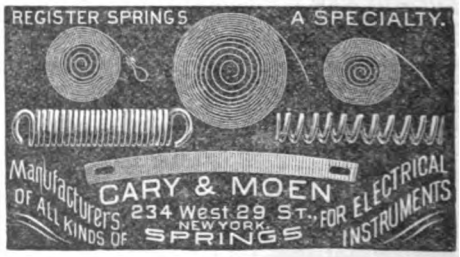

WANTED.

A gentleman well versed in Electricity desires a situation as Assistant Electrician.

Address, LAWRENCE ZIMMERMANN,

326 Manhattan Ave., Brooklyn, N. Y.

Digitized by Google

THE ELECTRICIAN
AND
ELECTRICAL ENGINEER.

Conducted by F. L. POPE. G. M. PHELPS, JR., Associate Editor.

PUBLISHED MONTHLY BY

THE ELECTRICAL PUBLISHING CO.,

115 Nassau Street, New York city.

European Agent, F. H. WEBB, 4, The Sanctuary, Westminster London, S.W., Eng

TERMS OF SUBSCRIPTION.

United States and Canada,	per annum,	$3.00
Four or more Copies, in Clubs (each)	"	2.50
One Copy, Four Months,		1.00
Great Britain and other Foreign Countries within the Postal Union	"	4.00
Single Copies,		.25

[*Entered at the Post Office at New York, N. Y., as second class mail matter.*]

EDITORIAL ANNOUNCEMENTS.

Addresses.—*Business letters should be addressed and drafts, checks and post-office orders made payable to the order of the* ELECTRICAL PUBLISHING CO. *Communications for the attention of the editors should be addressed,* EDITOR OF THE ELECTRICIAN AND ELECTRICAL ENGINEER, 115 *Nassau Street, New York city.*

Communications *suitable for our columns will be welcomed from any quarter. Discussions of subjects relating to all branches of electro-technical work, by persons practically acquainted with them, are especially desired. Unavailable and rejected manuscripts will be returned only when accompanied by the necessary postage.*

Advertisements.—*We can entertain no proposition to publish anything for pay, or in consideration of advertising patronage, except in our advertising columns. Our editorial columns will express our own opinions only, and we shall present in other columns only such matter as we consider of interest or value to our readers*

NEW YORK, APRIL, 1887.

ANNOUNCEMENT TO SUBSCRIBERS.

WE are pleased to recognize the fact that a principal source of the growth of our subscription list is the favorable commendation of the ELECTRICIAN AND ELECTRICAL ENGINEER by those who are already subscribers, to their friends and acquaintances

We shall continue our endeavors to deserve your appreciation and good-will, by keeping up, and if possible improving the quality of our paper. To any of our present readers who may find it in their way to increase our list, we offer rates for 1887 as follows:

For your own subscription	and	1	new name	.....	$5	00
"	"	"	"	2	"	.....	7	00
"	"	"	"	3	"	.....	9	00
"	"	"	"	4	"	.....	10	00

This offer will hold good until April 1st.

The *Telegraphic Journal and Electrical Review*, London, will be supplied for one year in conjunction with the ELECTRICIAN AND ELECTRICAL ENGINEER for the additional sum of $4.00 with any subscription.

In addition to the usual methods prescribed for making remittances, money orders issued by the American, United States or Wells Fargo express companies will be found safe, cheap, and convenient.

Very respectfully yours,

ELECTRICAL PUBLISHING CO.,
115 Nassau St., New York.

SPECIAL ANNOUNCEMENT.

BY arrangement with the *Electrical World*, New York, we are able to make the attractive offer of that valuable and enterprising weekly journal in conjunction with the ELECTRICIAN AND ELECTRICAL ENGINEER for one year for $5.00 to new subscribers. To our present subscribers we will supply the *Electrical World* one year for $2.50.

PATENT OFFICE METHODS.

CONGRESS adjourned without taking up the annual attack upon the patent system of the country, which was initiated early in the session. It may safely be assumed that no serious danger to the continuance of a system which has, on the whole, worked so well for the development of industry is to be apprehended from the recurring efforts of those who would abolish all proprietorship in invention. The good sense, not to say justice, of the country is clearly on the side of the inventors.

Much, however, can be done to increase the usefulness and benefit of the patent system, to both inventors and the public. The desirability of better methods in the patent office, and of improvement in the average character and qualifications of patent solicitors, is generally recognized by all whose interests are connected with property in patents, and is attracting some attention in the public press.

Two evils are very noticeable in the present working of the patent office; namely, the great delay incurred in getting applications through to final action, and the multitudinous issue of patents on frivolous or useless devices, often mere expedients of the most obvious character, wholly unworthy of the name of inventions. The last named evil is unquestionably in large part the cause of the first, for in this way the facilities of the patent office are burdened beyond its capacity to dispatch business. There has been a manifest improvement during the past year in overtaking arrears of work, as shown in the annual report of the commissioner, but the situation is still very far from being satisfactory. The office is apparently doing its best, but under very discouraging conditions. Of the patents issued, to say nothing of the applications examined and rejected, it is safe to say that the interests of inventors and the public would be better served if more than one-half the alleged "useful inventions" had never reached the patent office. That they do reach the office, in applications persistently pressed till some sort of a patent is obtained, is largely due, to the multiplication of a class of solicitors whose methods resemble those of too many "claim" and "pension agents" in taking cases on speculation; "no patent no pay." Under the persistant pressure of such solicitors the practice of the patent office has tended toward a loose interpretation of the terms "useful" and "invention," till now they cover, if not a multitude of sins, a multitude of absurdities on the one hand and frivolities on the other. Among the latter are the innumerable cases in which the most ordinary mechanical skill or judgment is dignified by the name of invention. In reference to this class of patents, it must not be overlooked that the practice of the office in allowing them at all, often compels a meritorious inventor or

Digitized by Google

manufacturer working under established patents, to protect himself by making applications for patents upon many comparatively trifling features of machinery or processes—such as an ordinary workman would be sure to accomplish as a matter of course, and think nothing of it—lest it occur to somebody else to get patents therefor, and attempt to levy tribute upon all users.

In the New York *Evening Post* of March 25th, patent procedure is well discussed in a letter from "W. P. B." The writer directs attention to the desirability of some prescribed qualifications for admission to practice before the patent office. So long as the office receives business at the hands of anybody who chooses to call himself a patent solicitor, many meritorious inventions will be so badly presented as to cause great delay and an unreasonable amount of work on the part of the office; or as to be rushed through to the issue of valueless patents; and the number of trifling or useless devices patented will continue to increase in an accelerating ratio.

We quite agree with "W. P. B." that some prescribed qualification for solicitors is much needed, but hardly follow him in proposing the restriction of practice before the patent office to members of the bar. That a competent knowledge of the legal principles underlying the patent system is a necessary qualification will hardly be denied; but legal knowledge and experience, however wide and varied, can hardly take the place of the acquaintance with physics and the mechanic arts required on the part of a capable patent solicitor. It will probably be conceded by all who have had experience in invention or in the ownership of patent rights that a qualification for solicitors, based upon an adequate knowledge of fundamental patent law and of the arts and sciences, not omitting a reasonable familiarity with the use of language, would accomplish much to improve the working of the patent system. The only losers would be the incompetent and speculative solicitors who now burden the office with unnecessary work, and flood the country with worthless patents.

A WIDE-SPREAD interest in the subject of electrical distribution by secondary generators, was well attested by the addresses and discussion at the meeting of the American Institute of Electrical Engineers, March 15th. The assignment beforehand of "distribution by secondary generators" as the topic for the evening, elicited the attendance of a number of gentlemen well qualified by study or experience to elucidate and discuss it. Nothing can better serve to bring out the actual merit of new methods or systems than such gatherings of investigators and workers for their discussion. It is well for the usefulness of the Institute that its membership includes so many practical as well as theoretical electricians. The report of the meeting, printed elsewhere, will be read with interest by absent members of the institute, and by all our readers whose studies or pursuits bring them into any relation to the subject of the distribution of electricity. So rapid has been the recent development of successful methods of using electricity for light and power, and so accustomed have electricians already become to the situation, that it seems almost a platitude to say that electricity will at no distant day be supplied from house to house, for a variety of uses, much as water now is. Obviously the chief problem of the electrical engineer, at present, is, how best to transport and deliver electricity.

THE quarterly report of the Western Union Telegraph Company exhibits the continued decline of the net revenues of that company since 1883. For the year ending June 30, 1886, the net revenues were $3,919,855.13. In the president's report of March 9th, the net revenues for the quarter ending December 31, 1886, are given as $991,018—and the partly estimated revenues for the succeeding quarter as $750,000, or at the rate of $3,000,000 annually. This is less than the revenues of the company for any year since 1874. Although dividends are suspended, Western Union shares are maintained at above 75. There is a widespread impression that a consummation of the much talked of deal in Baltimore and Ohio Railroad stock will involve a closing out of the Baltimore and Ohio Telegraph business to the Western Union Company. Meantime President Bates of the Baltimore and Ohio Telegraph Company gives to the press a rose-colored account of the financial success of that company. (See page 165). Whether competition continue, or consolidation ensue, is of little moment to the general public, so that it get cheap telegraphing—but not too cheap to be efficient and trustworthy.

THE West, not to be behind the rest of the world, is keeping up its record by taking a leading part in developing electric railways. We print elsewhere a description of the electric street railway in Denver, furnished us by the United States Electric Company of that city. The system used at Denver—the joint production of Mr. Sidney H. Short, formerly Professor of Physics in the University of Colorado, and Mr. John W. Nesmith, President of the Colorado Iron Works—presents many points of interest to electrical engineers and the public. Its practical success seems to have been demonstrated by public use at Denver for a considerable period of time. Our San Francisco correspondent states that this system is to be tried on the electric railway laid out for that city.

We quite agree with our Denver friends that the comparison between their series system and a multiple arc system—as shown in the article—is somewhat unfair to the advocates of the latter. Certainly no electrical engineer would undertake to run a multiple arc system with conductors of the size employed at Denver. The disparity, shown in the comparison between the two systems in loss of energy in the conductors, would very rapidly diminish with increase in their size.

THE course of the Westinghouse Electric Company in promptly bringing suit upon the Gaulard & Gibbs' patent against the first discoverable infringer, is to be commended. The patent was issued in October last, and, as noticed in our news columns, a suit for infringement was brought March 15th against the Sun Electric Company. There is a directness about this procedure in striking contrast to the too prevalent practice of letting supposed infringers of important patents run on for years, till they have built up a business, and to the still worse practice of attacking them through the press. The interests of all directly concerned in the scope and validity of a patent, as well as of the public, are best served by prompt appeal to the courts.

Digitized by Google

ARTICLES.

THE STORY OF THE WORD "TELEPHONE."

BY THOMAS D. LOCKWOOD.

In a little book which I perpetrated in the year 1882, there was a chapter entitled "Facts and Figures about the Speaking Telephone." I made the rash statement in the opening paragraph of that chapter, that "The first record of a sound transmitting instrument in connection with which the word 'telephone' occurs, is *believed* to be the English patent of Sir Charles Wheatstone, No. 2,462 Oct. 10, 1860." This statement was strictly true. Such was at that time my belief.

The book in question was reviewed by the British *Telegraphic Journal and Electrical Review* and the above statement was commented upon as follows:

"We fancy the use of the word 'telephone' as a sound transmitter dates considerably farther back than 1860. Indeed, some of our readers may remember the well-known 'telephonic concerts' of Sir Charles (then professor) Wheatstone, given at the now defunct Polytechnic Institution very many years back, in which musical sounds were transmitted a considerable distance through wooden rods."

This comment, together with a consideration of the numerous and frequent absurd statements made by zealous advocates of the multitudinous claimants to the inventorship of the speaking telephone, determined me to find out what was discoverable in the matter, and to bring together in the pages of this magazine the result of my researches.

How frequently we hear, that "it is simply impossible that Professor Bell intended to patent or describe the speaking telephone in his 1876 patent; if he had he would have entitled it "telephone," whereas, he simply called it "telegraphy." Then on the other hand, we are gravely told that "Professor Bell was well aware before his invention, patented March 7th, 1876, that speaking telephones were well known to every one, or he wouldn't have referred to them by that name in a prior application for patent in harmonic telegraphy." Of course the wish with these advocates is very nearly related to the thought. It is, however, perfectly obvious to all who take thought in such matters, that the mere name of any invention is an immateriality; in this case, glaringly so; for the name is evidently applied to its present use simply for convenience; its very etymology indicating the true meaning; viz, "sound from afar,"—and of course it is equally easy to see that sound is not restricted to speech. With reference to the inference that some wish to draw from the circumstance that Professor Bell's patent is entitled "An Improvement in Telegraphy", it is only, I think, necessary to point out that the term "telegraphy" had from usage grown to be generic; and it was equally as reasonable to apply it to a speaking telegraph, as it was to the strokes of a sounder, or the visual indications of a Cooke and Wheatstone needle, or a Bright's bell instrument, none of which made a written or graphic record of their signals.

I will now give an abstract of the information which I have accumulated on this head.

Prof. Wheatstone, at quite an early period of the present century, was a persistent and energetic experimenter in the transmission of sound through solid bodies, and in 1821 succeeded in transmitting music "with all the varieties of tune, audibility and all the combinations of harmony unimpaired." He exhibited what he called "The Enchanted Lyre," and so perfect was the illusion in this instance, from the intense vibratory state of the reciprocating instrument, that it was universally imagined to be one of the highest efforts of ingenuity in musical mechanism. As a matter of fact the mechanism was of the simplest character, comprising only an ordinary lyre of eight strings, suspended by a wire extending through the floor from the sounding board of a pianoforte in a room above. The accompanying figure shows the arrangement.

These researches are recorded in the *Literary Gazette*, 1821; Ackerman's *Repository* of the same year; in a scientific paper written by Wheatstone himself for Thomson's Annals of Philosophy, 1823; vol. vi, pp. 81-90; and in a paper written also by Wheatstone for the Journal of the Royal Institution, 1831, vol. 2. The last paper records among other things, the much repeated observations of Robert Hooke, on communicating through a distended wire; and concludes with these remarkable words:—

"The transmission to distant places, and the multiplication of musical performances are objects of far less importance than the conveyance of the articulation of speech. The almost hopeless difficulty of communicating sounds produced in air with sufficient intensity to solid bodies, might induce us to despair of further success; but could articulations similar to those enounced by the human organs of speech be produced immediately in solid bodies, their transmission might be effected with any required degree of intensity. Some recent investigations lead us to hope that we are not far from effecting these desiderata; and if all the articulations were once thus obtained, the construction of a machine for the arrangement of them into syllables, words, and sentences, would demand no knowledge beyond that we already possess."

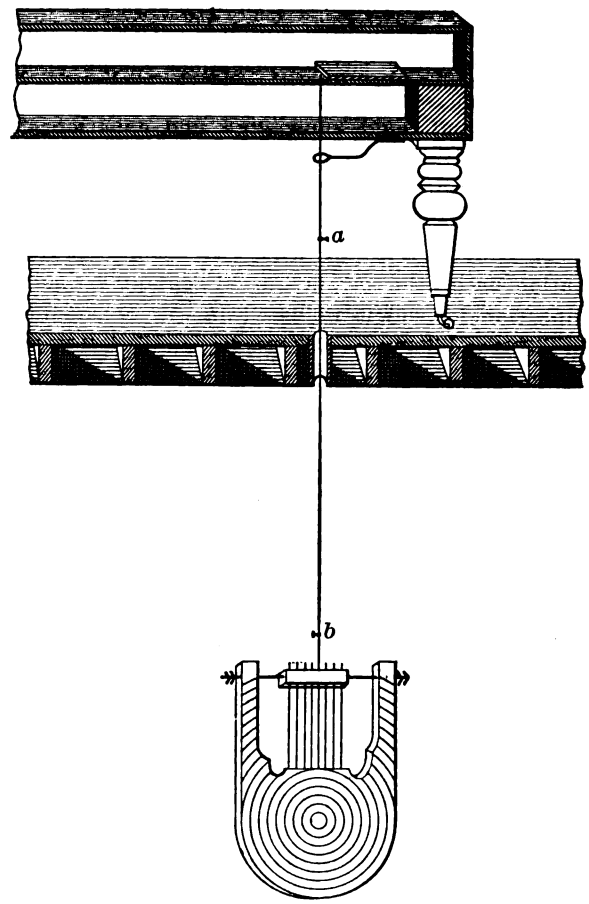

It is to be noticed that the idea that articulations might be transmitted and reproduced *by the agency of electricity* does not seem to have occurred to Prof. Wheatstone.

Before dismissing Professor Wheatstone's own papers, it will be interesting to note that in October, 1837, he compiled an article for the London and Westminster *Review*, in which he gave an account of the several attempts which had up to that time been made to imitate the articulations of the human voice by mechanical means; and that this article concludes with the paragraph "There are no doubt a great many difficulties yet to be contended with, before we can succeed in perfectly imitating the articulations of speech; but the partial success of the attempts of which

Digitized by Google

we have laid an account before our readers, ought to encourage further trials. It is not too much to say in the words of Sir David Brewster, 'We have no doubt that before another century is completed, a talking and a singing machine will be numbered among the conquests of science.'"

It is also interesting to note *en passant* that Professor Wheatstone devised a mechanical instrument (which he describes in the *Quarterly Journal of Science* for 1827) for rendering audible the weakest sounds, to which he gave the name of *microphone*.

I have been somewhat disappointed to find that in these papers Wheatstone himself does not employ the word "telephone," although there is reason to believe that he was in the habit of referring to his appliances for transmitting sound by that name. In a work entitled "Posts and Telegraphs, Past and Present," published in 1878, I find the following amusing anecdote of Sir Charles Wheatstone's acoustic performances, given by a Mr. William Chappell: "An eminent foreign performer on the violincello came to England, bringing a letter of introduction to Wheatstone. He left the letter at the house, and made an appointment to call at a particular hour on the following day. Wheatstone was at home to receive him, and thinking to surprise and amuse his visitor, hung a violincello on the wall of the passage, having a rod behind it to connect it with another, which was to be played from within when he entered the hall. The guest turned in every direction to find whence the sounds came, and at last approaching the violincello hanging on the wall, and having satisfied himself that they proceeded from it, although there was neither hand nor bow to play upon it, he rushed out of the house in affright, and would never enter it again."

In Timbs's Year Book of Facts in Science and Art, for 1845, is found on page 55, this item:

"THE TELEPHONE."

"Captain John Taylor has invented this powerful instrumsnt for conveying signals during foggy weather by sounds produced by means of compressed air forced through trumpets; audible at six miles distance. The four notes are played by opening the valves of the recipient, and the intensity of sound is proportioned to the compression of the internal air. The small sized *telephone* instrument which is portable, was tried on the river and the signal notes were distinctly heard, four miles off. The instrument is engraved in a late number of the *Illustrated London News*."

The next published instance of the use of the word "telephone" occurs in the same journal—Timbs's Year Book of Facts; but for the year 1854.

It is entitled "*New Telephone*," and reads:—"A very curious system of telephony *for the transmission of language* at great distances by means of musical sounds has been invented by M. Sudre, at Paris. The plan consists in making use of three notes placed at given intervals; and which when combined or repeated according to certain rules, are capable of rendering the most complicated sentences. Thus one of the company writes a few lines, and on M. Sudre reading them, he strikes his three notes alternately according to his method, when a third person without any previous knowledge of the writing repeats the words merely from hearing the notes. The system has been, it is understood, tried on a very extensive scale to test its applicability to naval and military purposes, and it is stated fully to justify the high enconiums the French Institute and other scientific bodies have bestowed on it."

At this epoch we find that Wheatstone once more crops up.

Referring again to the little book—"Posts and Telegraphs" by Tegg; London, 1878, page 290 I find the following:—

"On the 10th of May, 1855, an exhibition took place before Her Majesty the Queen, at the Polytechnic Institution, of which the only account that has been reproduced is that given by Mr. C. K. Salaman, in a letter to the 'Choir':—

"1. Lecture by J. H. Pepper, Esq., on Professor Wheatstone's experiments on the transmission of musical sounds to distant places, illustrated by a *telephone* concert, in which sounds of various instruments pass inaudible through an intermediate hall, and are reproduced in the lecture room, unchanged in their qualities and intensities."

The sounds produced in a lower room were carried through a wooden rod to the lecture room.

Prof. J. H. Pepper describes this occurrence in his "Cyclopedic Science Simplified," London, 1869.

In 1871, in a course of lectures on sound, Professor Tyndall repeated this illustration; and the repetition is recorded in the Journal of the Society of Arts, vol. 19.

We now arrive at Wheatstone's British patent, No. 2,462, of 1860, in which he claims among other inventions—

"The employment of musical pipes or free tongues acted upon by wind in the construction of *telephones*, in which the alternation of long and short sounds are grouped in a similar manner to the long and short lines in the alphabet of a Morse's telegraph; or in which two sounds are made to succeed in the order of the alternate motions which constitute the alphabet of a single needle telegraph."

The next example is the telephone of Philipp Reis:—"I give to my instrument the name telephone," *vide* Jahresbericht of the Physical Society, Frankfort, 1860–1861.

The name was then applied almost exclusively to this instrument from this time until the advent of the speaking telephone.

In February, 1875, Mr. Alexander Graham Bell used the word to indicate a vibrating receiver in a system of harmonic telegraphy, and describes it in these words "For instance, with a series of transmitters I can place at the receiving end of the line a telephone from the rod of which silk threads may lead to a series of bodies such as tuning forks capable of definite vibration, each one of these bodies having a rate of vibration corresponding to one, and one only, of the transmitters. In case two or more different sets of impulses be transmitted simultaneously to the telephone, each will affect that one alone of the tuning forks whose vibrations are synchronous with the impulses. The same effect could be produced by resonators of different pitches placed under the rod of the telephone."

And during the years 1875–1878 Elisha Gray applied the term "telephone" to his entire harmonic system—*vide* U. S. Patent No. 175,971, April 11, 1876, Telephonic Telegraphs; "A New and Practical Application of the Telephone," by Elisha Gray—Journal of the American Electrical Society, 1877. "The Telephone, the Microphone and the Phonograph," Du Moncel, Paris, 1878, "Electricity and the Electric Telegraph," Prescott, 1878, pp. 868–880; and the Gray and Bell correspondence in February, 1877, (Dowd Case, vol. 1, pp. 146–147), in which Mr. Gray says "I gave a lecture in McCormick Hall, this city (Chicago), Tuesday evening, 27th inst., on the telephone, as *I* have developed it. I also connect with Milwaukee, and have tunes and telegraphing done from there."

The term "telephone" seems to have been applied by Mr. Bell in his paper before the American Academy of Arts and Sciences, May 10, 1876, to harmonic and speech receivers and transmitters indiscriminately; but referring once more to the Gray and Bell correspondence we find that Mr. Bell has, under date of March 2d, 1877, reached a point where "telephone" for him has but one meaning. He says, "I have not generally alluded to your name in connection with the invention of the electric 'telephone,' for we seem to attach different significations to the word. I apply the term only to an apparatus for transmitting the voice (which meaning is strictly in accordance with the derivation of the word), whereas you seem to use the term as expressive of any apparatus for the transmission of musical tones by the electric current."

Thus we see that the word "telephone" is not a new

Digitized by Google

word, but that it has in the past been used in a variety of ways.

It seems to me, therefore, that the definition given to the word in Knight's American Mechanical Dictionary is a fair and pertinent one. This is "TELEPHONE, an instrument for conveying signals by sound. It may consist of a steam whistle, a fog trumpet, or other audible alarm. The term, until lately, has been particularly applied to a signal adapted for nautical or railroad use, in which a body of compressed air is released from a narrow orifice, and divided upon a sharp edge in the manner of a steam whistle. The term is now acquiring a different signification."

However, since the Centennial exhibition of 1876, the application of the term to an apparatus for the transmission and reproduction of speech has become well nigh universal; and every other meaning seems to be totally superseded.

I have thought it worth while, therefore, to make a compact record of the instances of its use otherwise which I have been able to find.

THE ELECTRIC LIGHTHOUSES OF MACQUARIE AND OF TINO.*

BY JOHN HOPKINSON, M.A., D.SC., F.R.S., M. INST. C. E.

THE subject of the use of the electric light in lighthouses was fully discussed at the Institution in 1879, when papers by Sir James Douglass, M. Inst. C. E., and by Mr. James T. Chance, Assoc. Inst. C. E., were read.[1]

The subject has been further elaborately examined by Mr. E. Allard,[2] and more recently in practical experiments made at the South Foreland, exhaustively reported on by a committee of the Trinity House.[3] The justification of the present communication is that, at the lighthouses of Macquarie and of Tino, the optical apparatus is on a larger scale than has hitherto been used for the electric arc in lighthouses, and presents certain novel features in the details of construction. Further, as regards the electrical apparatus, tests were made upon the machinery for Macquarie when it was in the hands of Messrs. Chance Brothers and Co., which still possess some value, although five years old; and, in the case of Tino, the machines are practically worked together in a manner not previously used otherwise than by way of experiment.

In the case of both lighthouses, Messrs. Chance Brothers and Co., of Birmingham, entered into a contract for the supply of all the apparatus required, including engines, machines, conductors, lamps, optical apparatus, and lanterns; and Sir James Douglass, engineer-in-chief of the Trinity House, acted as inspecting engineer to the respective colonial and foreign governments.

As these two lighthouses present many features in common, it may be most convenient to give a full description of the earlier lighthouse, and then limit the description of Tino to those points in which it differs from Macquarie.

MACQUARIE.

This lighthouse is situated on South Head, near Sydney, the precise position being shown in a copy from the chart, plate 9, figure 1. A lighthouse was first placed at this important landfall in 1817. The focal plane is 346 feet above the sea, and the distance of the sea horizon is, therefore, 21.6 nautical miles, and the range about 27 nautical miles for an observer 15 feet above the sea.

Optical apparatus.—The light is a revolving one, giving a single flash of eight seconds duration every minute. On account of the considerable altitude of the lighthouse, it was necessary to secure that a substantial quantity of light should be directed to the nearer sea; but it was also essential, on account of the exceptional power of the apparatus, that this dipping light should only be a small fraction of that sent to the horizon, otherwise its effect would be excessively dazzling. Many years ago, Mr. James T. Chance urged that it was not wise to make use of very small apparatus for the electric arc, because a larger apparatus renders it possible for the optical engineer to effect with greater precision the distribution of light which is most desirable, and because any trifling error which may occur in the position of the electric arc has, with the larger apparatus, a less marked effect on the light as seen from the sea. In the lighthouses of Souter Point, the South Foreland, and the Lizard, the third order apparatus of 500 millimetre focal length was adopted. Optically, the larger the apparatus used the better, but there might be some question whether, on purely optical grounds, the advantage of going beyond the third order is sufficient to justify

Fig. 1

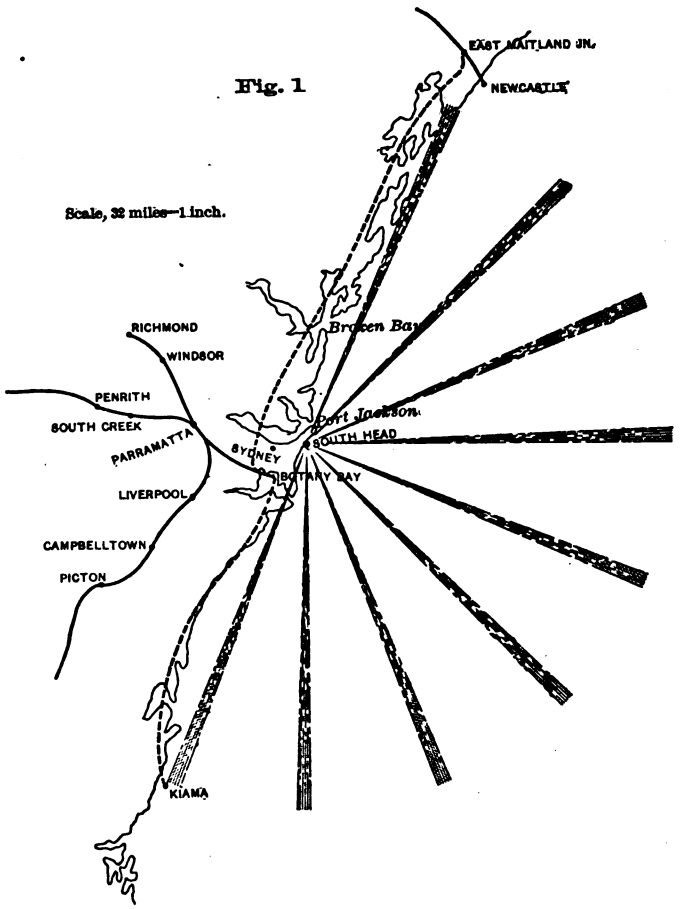

the additional expense, but in the case of a revolving apparatus, the third order is a very inconvenient size for the service of the lamp; it is too large to be conveniently served from the outside, and too small to admit the attendant within it with comfort. With the large currents, which are now easily obtained and are likely to be used in lighthouses, a first or second order apparatus has the further advantage that it is less liable to injury from particles thrown off from the heated carbons. In the case of Macquarie, it was decided to adopt an apparatus of the first order, 920 millimetre focal length; it was further decided that the optical apparatus should produce its condensing effect by means of a single agent; that is to say, the vertical straight prisms which were used in Souter Point and other revolving electric lighthouses should be dispensed with. The condensation and distribution of light necessary may be obtained by means of a single agent, with apparatus such as has been proposed by Mr. Alan Brebner, Jun., Assoc. M. Inst. C.E.;[4] but this construction is open

*Paper read before the Institution of Civil Engineers (London, Eng.), December 7, 1886.

1. Minutes of Proceedings Inst. C.E., vol. lvii.; pp. 77 and 168.
2. Mémoire sur les Phares Électriques, 1881.
3. Report into the relative merits of electricity, gas, and oil as lighthouse illuminants. Parts 1 and 2. PP. 1885.

4. Minutes of Proceedings Inst. C. E.; vol. lxx., p. 386

Digitized by Google

to the objections that it is somewhat costly, and that it increases the length of the path of the rays through the glass, and consequent absorption. A practically better plan is to adopt forms not differing very greatly from those introduced by Fresnel; to specially arrange them for the purpose in hand, and to accept certain consequent minute deviations from a mathematically accurate solution, for the sake of advantages of greater importance, when all the actual conditions are taken into account. Figure 2 shows the optical apparatus in vertical section; the upper and the lower totally reflecting prisms are, as is usual in revolving lights, forms of revolutions about a horizontal axis; they direct the light incident upon them to the horizon and the distant sea from 10′ above the horizon to 30′ below; they are specially adjusted to distribute the light in azimuth over the arc of 3° necessary for a proper duration of flash.

The reflecting portion of the apparatus has the profile so calculated that the central lens, and the three rings next to the lens above and below, direct their light to the horizon without vertical divergence, except what is due to the size of the arc; the light for the nearer sea is obtained from the remaining ten lens-segments, Nos. 5 to 9 inclusive, above and below the centre, counting the centre as No. 1, the distribution being according to the following table, in which the first column gives the denomination of the elements of the lens in accordance with the numbers marked upon the section; the second, the angle between the direction of the sea horizon and the ray emerging from the upper limit of the element; the third, the angle between the direction of the sea horizon and the ray from the lower limit of the element, the negative sign denoting that the emerging ray is above the horizon. This practice, of appropriating certain elements of the apparatus to different distances on the sea, was first introduced by Mr. James. T. Chance, in the lights of the South Foreland, exhibited in January, 1872.

The ray, dipping at an angle of 7° 46′ 57″ below the horizon, will strike the sea at ½ mile, while 5° 8′ 52″ corresponds to ¾ mile, 2° 37′ 30″ to 1¼ mile, 1° 30′ to 2 miles, 1° to 2½ miles, and 30′ to about 4 miles. Thus the direct light begins at about ½ mile from the lighthouse. From ½ mile to ¾ mile the sea receives light from one element of the apparatus, from ¾ to 1¼ mile from two elements, from 1¼ mile to 2 miles from three elements, from 2 to 2½ miles from four elements, and beyond 2½ miles from six elements; the upper and lower totally reflecting prisms come in aid at about five miles. The main power of the apparatus is hardly attained till a distance of eight or ten miles. Figure 3 is a sectional plan of the apparatus by a horizontal plane through the focus. It will be seen that a dioptric mirror is placed on the landward side of the arc. This mirror is arranged to form the image of the arc at one side of the carbons, so avoiding the interception of light which would result if the mirror were used in the ordinary way, and contributing to the horizontal divergence necessary. Further horizontal divergence is given by the form of the lens. In the ordinary revolving light the inner face of the lens is plane; here it is cylindrical, the axis of the cylinder being vertical. This method of obtaining horizontal divergence is a modification of a proposal of Mr. Thomas

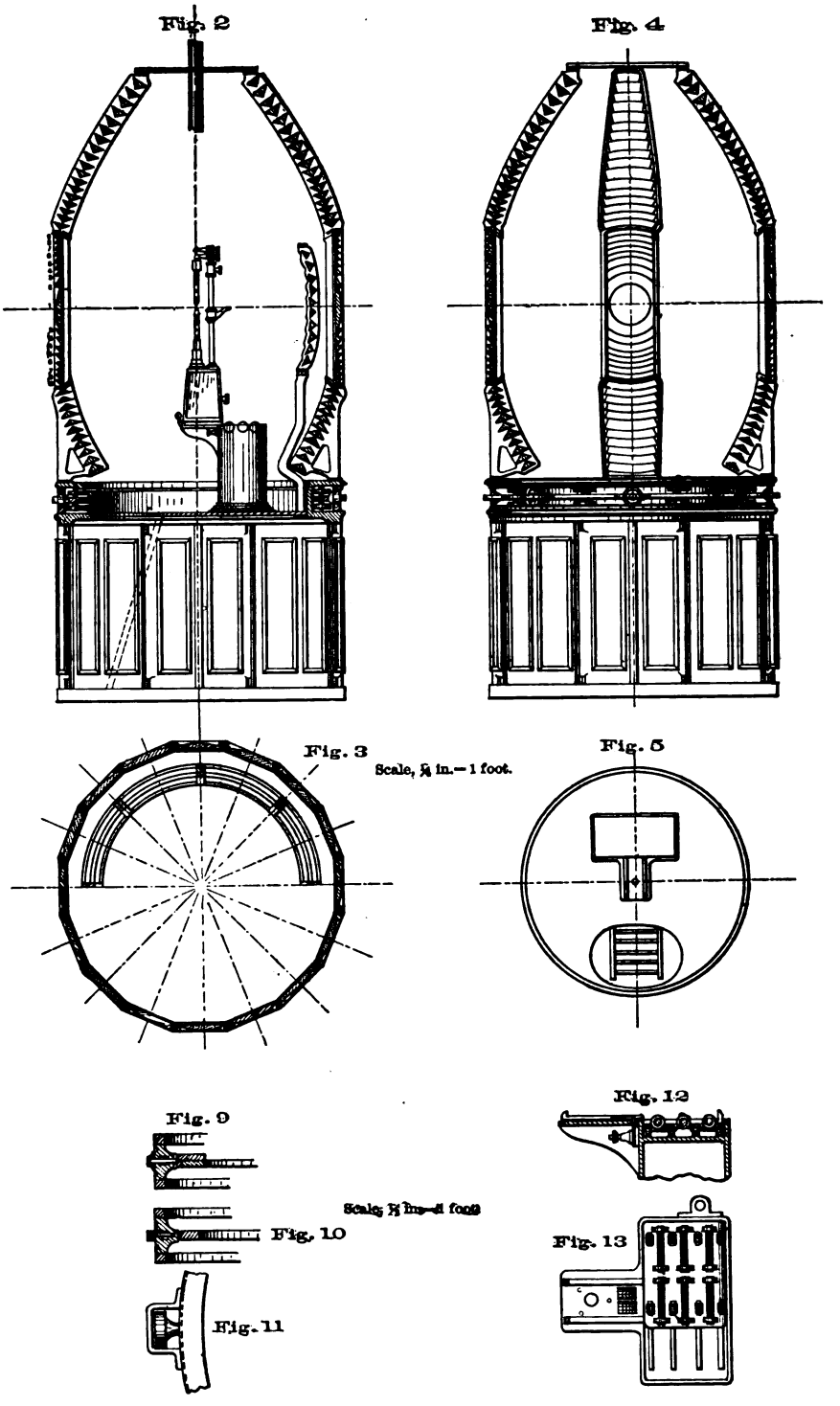

I.	II.	III.
	° ′ ″	° ′ ″
9 top	−10 0	2 30 59
8 "	2 30 59	5 8 52
7 "	−10 0	2 37 30
6 "	−10 0	1 30 0
5 "	−10 0	1 0 0
5 bottom	−10 0	1 0 0
6 "	−10 0	1 30 0
7 "	1 30 0	3 44 27
8 "	3 44 27	5 50 41
9 "	5 50 41	7 46 57

Digitized by Google

Fig. 14.

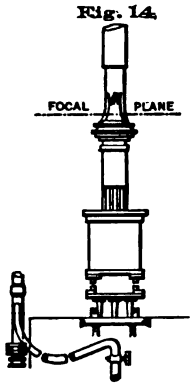

ARRANGEMENT FOR OIL LAMP.

Scale, ½ in.=1 foot.

Fig. 15.

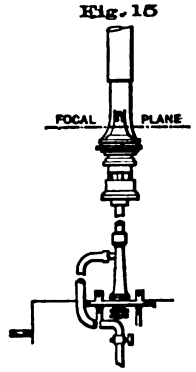

ARRANGEMENT FOR GAS BURNER.

Fig. 16.

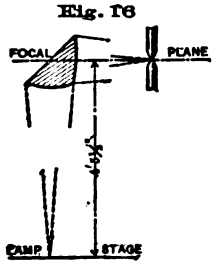

Fig. 17.

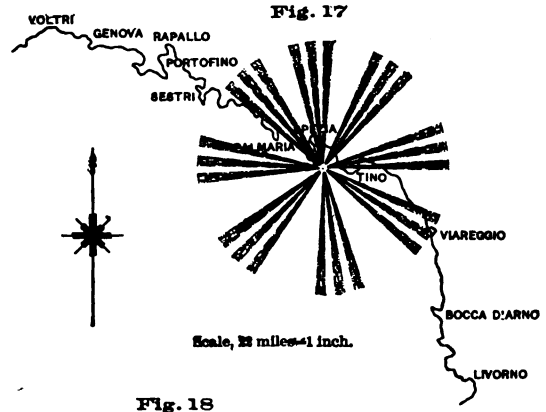

Scale, 22 miles=1 inch.

Fig. 18.

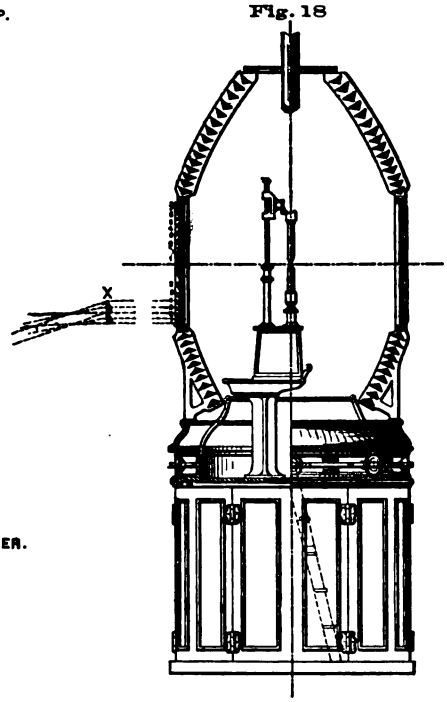

Fig. 19.

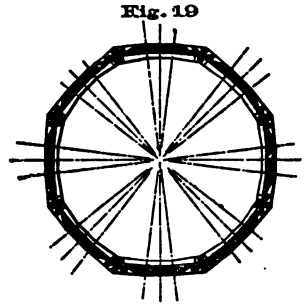

Fig. 20.

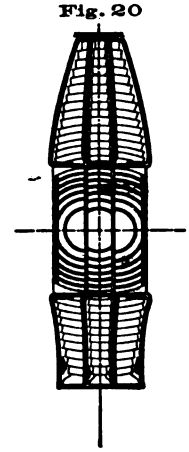

Scale, ½ in.=1 foot.

Fig. 21.

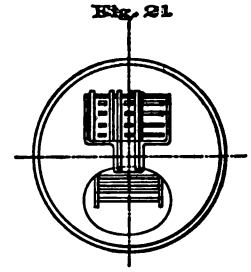

Stevenson,[5] M. Inst. C.E.; it is not mathematically accurate, inasmuch as the cylindrical form of the inner face of the lens not only displaces the emergent ray horizontally, but also in the case of rays not in the vertical nor horizontal plane through the focus, to a small extent vertically, but the error is easily calculable, and is unimportant, provided the lens is narrow, and the horizontal divergence of the beam moderate. Figure 4 shows a complete panel in elevation with revolving carriage. Figure 5 shows the plan of the service table of the pedestal and lamp table. A new construction was adopted for the gun-metal framework of the optical apparatus to reduce the interception of light by the frame to a minimum. The metal segment A, figure 6, forms part of the lower prism-frame, B part of the upper frame, whilst C and D are parts of the frame for the refracting portion of the apparatus; uprights E support the upper prism-frames without throwing weight on the lens frames. With the ordinary constructions of frame, figures 7 and 8, the equivalent of these ring segments A and B would intercept about double as much light as in this new construction.

Mechanism for rotation.—The pedestal is similar to those designed by Sir James Douglass to permit the light-keeper to obtain access from below to the interior of the apparatus without in any way interfering with its rotation. The clock work is fitted with the governor, and maintaining power used by Messrs. Chance Brothers & Co. for the last twelve years. The roller ring may be mentioned as of an improved type, for although it has been used for some years in all Messrs. Chance's lights, it has not been described before. The rollers and roller paths which carry the whole weight of the optical apparatus have long been made conical, so that the surfaces roll upon each other without twisting. There is consequently a very considerable radial force on each roller tending to force it outwards; the reaction against this force causes a very important part of the total frictional resistance. Figure 9 shows a portion of the roller ring and one of the conical rollers, according to the old construction, figures 10, 11, according to the improved construction; in the former it will be observed that the thrust of the roller is received on a collar; in the latter, on the end of a pin. The reduction of friction is practically very considerable, and although of small importance in a slow moving apparatus like Macquarie, is of great importance in heavier and quicker apparatus; for example, the triple-flashing light at Bull Point, in Devonshire.

Lamps.—These are of the Serrin type, and were supplied by Baron De Meritens.

Lamp table.—The arrangements for rapidly changing electric lamps, and for substituting gas or oil when desired, are shown in figures. 12, 13, 14 and 15.

Fig. 6.

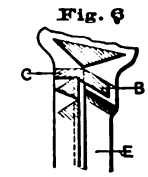

Fig. 7.

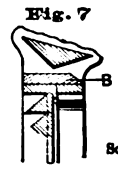

Fig. 8.

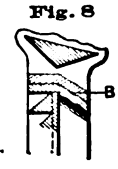

Scale, 1 in.=1 foot.

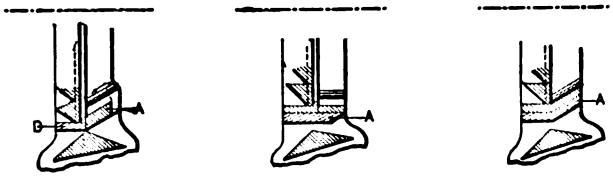

The intention was to use a gas lamp in clear weather, and half power or full power electric light in thick

5. "Lighthouse Construction and Illumination;" p. 186.

Digitized by Google

weather, according to the opacity of the atmosphere; but the author understands that in practice the electric arc is always used. The paraffine oil lamp is intended as a resource in case of failure of the supply of gas.

Focussing the arc.—Two approximately rectangular prisms are fixed upon the mirror frame at about 90° from each other, the longer face of each is plane, the other two faces convex, of such curvature as to form a good image of the arc upon the service table, as shown in figure 16. During daylight, a pointed sight or focimeter is placed at the position of the image formed by the lens of an object on the horizon; this then is the position which the arc should occupy. A sight is next taken over the focimeter into one of the adjusting prisms, and a bright object such as a threepenny piece placed on the service table, is moved about until its centre is seen in the prism, exactly upon the point of the focimeter; a mark is made in the then position of the object. When the arc is correctly adjusted, its image on the service table will be at the point where the mark is made. Two prisms are used in order to secure that the arc shall be in the centre of the apparatus as well as at the correct level.

Lantern.—The lantern is of the well known Douglass type.[5]

Dynamo-electric machines.—Two alternate current machines, with permanent magnets manufactured by De Meritens, were supplied. Each machine has five rings in its armature, and in each ring there are 16 segments. In supplying one arc for a lighthouse the machine runs about 830 revolutions per minute, and gives a current of 55 amperes when half the coils are used, and of 110 when the whole of the machine is in action, the internal resistance in the two cases being 0.062 and 0.031 ohm. It is unnecessary to give a description of the machine as its general construction and dimensions are well known, but some numerical details are given below.

Engines.—Each machine is driven by an 8 h. p. Crossley gas engine through a belt without countershafting.

Tests.—Whilst the dynamo machines were at the works of Messrs. Chance Brothers and Co., a series of experiments was made in March 1881 to determine their properties. The time is long passed when it would be profitable to give the details of these experiments, but the general conclusions drawn at the time are still interesting. When the external resistance was a metallic conductor with small self-induction, it was found that with varying resistance and speed the currents observed agreed fairly well with calculation from the formula

$$\frac{A}{\sqrt{R^2 + \left(\frac{2\pi\gamma}{T}\right)^2}},^6$$

in which R is the total resistance of the circuit, γ the self-induction, and T the periodic time. When the machine was running 830 revolutions per minute $A = 67$ volts and $\left(\frac{2\pi\gamma}{T}\right)^2 = 0.197$; hence $\gamma = 6.4 \times 10^5$ centimetres. The eighty sections of the machine are arranged four in series, twenty parallel. For a single section the value of γ would be $.32 \times 10^5$ centimetres. The maximum induction in the core, which has an area of five square centimetres, is 24,600 or 4,920 per square centimetre. The loss of power was greater when the machine was doing little or no external work than when that work was great. This is clearly seen in the following table:—

Current amperes	7.70	73.60
Electrical work horse-power	0.69	5.66
Mechanical work applied	3.09	6.55
Loss	2.40	0.89

Photometric experiments were made upon the arc, and simultaneous measurements of effective power applied and of current passing. The red light was measured through bright copper ruby glass, and the blue through a solution of sulphate of copper and ammonia. The horse-power was measured by a transmission dynamometer; but the results must be accepted with some reserve, on account of the difficulty of ascertaining the mean tension in a strap which is constantly varying. The oscillations of the dynamometer were damped by a dashpot containing tar.

	Half power.	Full power.
Red candles	1,988	4,708
Blue "	4,079	11,382
Current (amperes)	54.5	105
Mechanical power applied (h. p.)	4.5	6.9
Power expended in heating conducting wires (h. p.)	0.24	0.95

The results illustrate the fact that, as the current increases, the total light increases in a higher ratio, red light in a slightly higher ratio, and blue in a considerably higher.

The machinery for this lighthouse was sent out to New South Wales in November 1881, and was put up and started under the superintendence of Mr. J. Barnett, the architect of the colony, to whom is mainly due the success of the whole from the first start. The glare of the light upon the sky is said to have been seen at a distance of over 60 miles, far beyond the distance at which it would cease to be directly visible. The only criticism from mariners has been that when somewhat near the lighthouse the flashes are so bright as to dazzle the eye. This is an excellent proof of the power of the light, as a much smaller proportion of the light is directed upon the nearer sea than in any previous lighthouse. The lesson is that with powerful electric lighthouses almost all the light should, in ordinary weather at least, be directed to the horizon, and that the quantity thrown upon the nearer sea must be strictly limited. This is only possible when the focal length of the apparatus is large.

TINO.

This station is on a small island at the mouth of the Gulf of Spezia. Figure 17 is copied from the chart of the neighborhood. The focus is 386 feet above sea level. The distance of the sea horizon is 22.7 nautical miles, and the range practically 28 miles. The conditions, therefore, were very similar to those of Macquarie, with the exception that it was required to throw some light down into the channel between Palmaria and Tino. The lighthouse itself presents some interesting historical features. The buildings were originally a place of defense against the pirates who occasionally made descents upon the coast. Subsequently a coal fire lighthouse was established, and in the spring of 1885 part of the stock of lignite was still found to be in some of the buildings, where it had been lying for 50 years. In 1839 a dioptric light was established, one of the earliest of Fresnel's types, the lens ring being replaced by short straight prisms, which formed by no means a bad approximation, and could be ground without special machinery. The present electric lighthouse has been in contemplation for several years.

Optical apparatus.—The distinctive character of the light is a triple flash every half minute. The apparatus for producing this effect is of the general form introduced by the author in 1874. In October of that year he issued a pamphlet pointing out the several advantages of group-flashing lights, showing for the first time a simple dioptric apparatus suitable to their production, and also pointing out how easy it is to give the group-flashing effect with catoptric apparatus. Since that time a large number of dioptric group-flashing lights have been made by Messrs. Chance Brothers and Co., and some also in France, and Mr. Allard has incorporated group-flashing lights in the system of distinctions he recommends; also a considerable proportion of the light-vessels on the English coasts have been converted into group-flashing lights of the catoptric system. On the ground of economy the second order apparatus

5. Minutes of Proceedings Inst. C. E.; vol. lvi., p. 77.
6. Lectures on the "Practical Application of Electricity." Session 1882-83 "Some Points in Electric Lighting." By Dr. John Hopkinson. P. 88.

Digitized by Google

of 700 millimeter focus was adopted in the case of Tino. It is just large enough for tolerably convenient service of the lamp by an attendant entering within the apparatus. The apparatus, shown in vertical section in figure 18, and in horizontal section through the focus in figure 19, has 24 sides, eight groups of three; one group of three is shown in elevation in figure 20. The horizontal divergence is obtained in exactly the same way as at Macquarie, excepting that no mirror is used. The metal framework, however, approximates to the ordinary type, as the type used at Macquarie would have been costly when applied to a triple-flash light. The distribution of light vertically is as follows: upper and lower prisms, and the central lens, with the two lens rings next adjoining it, all to the horizon and most distant sea. The lens and lens rings direct their rays according to the following table, which is arranged in exactly the same way as the table already given for Macquarie:—

I.	II.	III.
	° ′ ″	° ′ ″
7 top	0 31 35	8 16 0
6 "	"	2 0 0
5 "	"	1 30 0
4 "	"	1 0 0
4 bottom	"	0 45 0
5 "	"	0 30 0
6 "	"	0 30 0
7 "	all to the horizon.	

No. 7 bottom was directed wholly to the horizon, in order to avoid the horizontal bar of the lantern. It will be observed that the quantity of light thrown upon the nearer sea is much less in the case of Tino than in that of Macquarie, and that greater reliance is placed upon the accuracy with which the arc can be kept in focus; experience has justified these changes, as improvements of a perfectly safe nature.

A small part of each flash is bent downwards and distributed over the channel between Tino and Palmaria, by means of subsidiary prisms fixed upon the lantern, shown at x, figure 18. These subsidiary prisms are really superfluous, as the scattered light from the beams overhead is found to be as effective at this short distance. Figure 21 shows the plan of lamp shunting table and service table.

Engines.—As there is no water upon the island, the practice of the Trinity House was followed, and two of the Brown hot air engines were supplied, each driving through a countershaft one of the machines. The countershafts could be connected by means of a Mather and Platt friction coupling, so that the two machines could be driven together, or either machine from either engine. Drawings of the Brown engines are given in Sir James Douglass' paper.[7] The accompanying indicator diagrams were taken from the compressing and working cylinders. Whilst these diagrams were taken, the effective power developed was measured by a friction brake on the driving pulley, and was found to be 9.1 h. p. Thus of 33.1 h. p. indicated in the working cylinder, 17.7 h. p. is employed in compressing the air, 6.3 h. p. is wasted in friction in various parts of the machine, and only 9.1 h. p. is effective upon the brake. The engines consume about four pounds of coke per effective horse-power per hour. In future lighthouses, when a steam engine cannot be employed, it would be preferable on every ground to use gas engines, and manufacture on the spot either Dowson gas or ordinary gas, according to the character of the fuel available.

Dynamo machines.—There are two machines of exactly the same type as those supplied for Macquarie, the only novelty lying in the method of using them. In 1868 Mr. Wilde discovered, by experiment, that two alternate current dynamos, independently driven at the same speed, would, if electrically connected, so control each other's motions that they would add their currents. The author subsequently arrived at the same conclusion independently, on theoretical grounds, and gave a thorough explanation of the fact.[8] The result has been put to a practical application at Tino. The machines are connected to a single switchboard, so that each half of the two machines can at pleasure be connected to, or disconnected from, the main conductors. Thus a current can be supplied from either machine at half power, 55 amperes, or full power, 110 amperes, or from the two machines of double power, or about 200 amperes. Further, a change can be made without extinction of the light from one dynamo and engine to the other. Thus, suppose one machine is working at full power, clutch the countershafts gradually together, so starting the second engine; throw on the band of the second machine, cut out half the first machine, and connect half the second machine at the switchboard; the two machines at once synchronize, without affecting the light. Disconnect the remaining half of the first machine, and connect the remaining half of the second, unclutch the countershafts, and stop the first engine. One man can effect the change, with no more disturbance of the light than a change from full to half power for about one second. A further conclusion, deduced from theoretical considerations, was that of two alternate current machines of

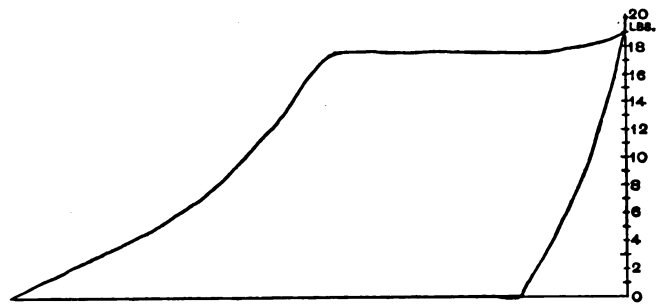

Compressor pump-cylinder, 24 inches in diameter. Stroke, 22 inches. Indicated h.p., 17.7.

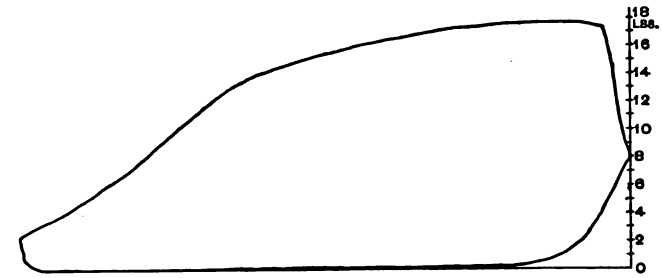

Working-cylinder, 32 inches in diameter. Stroke, 20 inches. Indicated h.p., 33.1. Revolutions per minute, 64. Power on brake on fly-wheel, 9.12 h.p. Pressure in reservoir, 19 to 24 lbs.

equal potential, one could be used as a generator of electricity, the other as a motor converting the current generated back into mechanical power. It was found impossible to verify this conclusion with such intermittent driving as that of a hot air engine. But Prof. W. G. Adams effected the verification without difficulty at the South Foreland, the motive power being steam.

Lamps.—These are the improved Serrin of Mr. Berjot. One of the three lamps supplied is of larger size, for the double power current from the two machines. This lamp was said to be suitable for a still greater current, but with about 200 amperes it soon became dangerously heated; a simple modification rendered the lamp equal to the actual work it had to do. It is, however, probable that for the occasional circumstances when it is necessary to use so great a current as 200 amperes in a lighthouse, a lamp worked partly by hand would be preferable to a regulator entirely automatic.

The apparatus was delivered in November 1884, and

7. Minutes of Proceedings Inst. C. E.; vol. lvii., plate 6.

8. Lectures on the "Practical Applications of Electricity." Session 1882-83. "Some Points in Electric Lighting." By Dr. John Hopkinson. And Journal of Society of Telegraph Engineers and Electricians; vol. xiii, p. 496.

Digitized by Google

was put up by workmen from Messrs. Chance's workshops, under the supervision of Mr. L. Luiggi, of Genoa, to whose ability and energy the complete success of the lighthouse is largely due. A complete test of the performance of the light, as seen from the sea in all grades of its power, was made in April 1885 by a commission consisting of Prof. Garibaldi, of Genoa; Mr. Giaccone, engineer-in-chief for Italian lighthouses; Captain Sartoris, and Mr. Luiggi, the author attending on behalf of Messrs. Chance. The light was well observed through rain, when distant 32 nautical miles, and although below the horizon, the position was precisely localized, and the triple-flash distinction unmistakable. At 18 miles distant the illumination of the flash upon white paper was sufficient to make out letters marked in pencil 1¼ inch high, and when 14 miles distant it was easy to ascertain the time from a watch. The light is frequently seen at a distance of 50 miles, near to Genoa.

A review of work which has been carried out naturally suggests many questions as to what conclusions experience has established, and what indications it gives of the probable direction for future developments. In the use of electric light in lighthouses, there are many questions upon which there is wide difference of opinion, questions both as to when and where electric light should be adopted, and questions as to the best way of employing it. It may not be unprofitable to allude to some of them. Although English engineers are now well agreed that a large optical apparatus should be used for the electric light, this opinion is not universally accepted. The advantages of a large apparatus have already been mentioned. To balance them, there is nothing on the other side but the less prime cost of the smaller apparatus. Although the difference of cost appears considerable when attention is confined to the optical apparatus, it is unimportant when the whole outlay on the lighthouse is brought into account. Cases are, however, conceivable in which a small optical apparatus such as a fourth order, having a focal distance of 250 millimeters, would be properly preferred; such, for example, as a harbor light which could be supplied with current from machinery also used for other purposes, but such cases are likely to be exceptional.

When a flame from oil or gas is the source of light, there is of necessity a considerable divergence vertically; and the distribution of the light through the angle of vertical divergence is not at disposal, except to a very limited extent in some cases, but is determined by the size and character of the flame. With the electric arc and a large optical apparatus it can be determined in considerable measure how the light shall be distributed—how much shall be sent to the distant sea, how much to the various distances between the foot of the tower and a distance of some miles. It becomes then a question what use is to be made of this facility. The experience at Macquarie and at Tino is emphatic, that it is in every way advantageous to direct much the greater part of the light to the horizon with a very small divergence, and to distribute the comparatively small remainder over the nearer sea with intensity increasing with the distance.

A question allied to the last is this: Whether it be desirable to provide means of directing the strongest light downwards on to the nearer sea in time of fog? The answer must depend upon the circumstances of the particular locality. Take the case of a lighthouse on an isolated rock, the purpose of which is primarily to be a beacon to keep ships off that rock; a lighthouse which would not exist were it not more practical or cheaper to build and maintain the lighthouse rather than remove the rock. Here surely it is of the greatest use to provide means whereby, if the light cannot penetrate two miles, it shall if possible be visible at one mile. But other cases occur in which the lighthouse has to cover a long length of coast, and has almost as much to do with points of the coast 10 miles distant as with the point upon which it is placed, cases in which the lighthouse is far more useful in guiding the regular traffic passing within a radius of 20 miles or more, than in preventing vessels running ashore within a mile of the tower. Such a light fails of its purpose if it can only be seen at a distance of a mile, covering less than $\frac{1}{100}$ part of its normal area of illumination; it becomes comparatively useless unless it penetrates to something like its normal range, and its efficiency must be measured by the fewness of the occasions when it fails to do this. It is a grave question whether it be prudent in such cases to place upon the light-keeper the responsibility of judging when the light should be dipped on to the nearer sea, the fact being that, if his judgment errs, he may actually diminish the range of the light, and cause unnecessarily the lighthouse to fail of fulfilling its most important function. It is easy for him to be misled if the fog is local and does not extend to any great distance from the lighthouse. Another element enters into the consideration—the height above the sea. If the focus be 100 feet above the sea level, the dip of the sea horizon is 9′ 45″, and a ray dipping 9′ 45″ below the sea horizon will meet the sea at a distance of 3.1 nautical miles from the tower. Even with a first order apparatus, if the arc be a powerful one, it is very difficult to render the light directed to the horizon from an elevation of 100 feet more powerful than that directed to a point distant four miles from the tower. Unavoidable divergence will render the two intensities practically equal.

Passing to questions of another class, what are the relative advantages in an electric lighthouse of continuous and alternating currents? Present practice tends altogether in favor of alternate currents, but this practice largely results from unfavorable experience of the older continuous-current machines. These machines have in many respects been greatly improved in the last two or three years. The continuous current presents the advantage of greater economy of power in producing the current, less floor space required by the machine, and a smaller prime cost. The alternate-current magneto machine, on the other hand, has the advantage that it may be driven with a defectively governed prime mover, with an indifferent lamp, and may suffer neglect with impunity; whereas the more compact and efficient continuous-current machine would be in serious peril of destruction. Optical apparatus can be constructed suitable to make the most of either form of arc. Hot air engines have found favor for electric lighthouses, because in many cases there is no available supply of fresh water. The engines of which the author has experience are open to the objection that they take a great deal of room, are not economical of fuel, and do not govern so quickly as is desirable; the wear and tear also, when they are worked to anything like their full power, is very serious. A gas engine, with Dowson or other gas made on the spot, could be used with greater advantage.

Antecedent to all considerations as to the best apparatus and machinery to be used, is the question, under what circumstances, if at all, should electric light be used in a lighthouse? The Trinity House experiments at the South Foreland showed to demonstration that, where the issue to be decided was how to produce a light which should be capable of penetrating the furthest in all weathers, electric light could do that which could be done in no other way, and that it was the cheapest light of all when the price is estimated per unit of light. But the conclusion was also reached that an electric light must inevitably cost a large sum, both in first outlay and in maintenance; therefore that electric light is extravagant unless very extraordinary power is a necessity. This conclusion is doubtless a fair consequence of experience, but it is not an inherent property of electric light. Both the capital outlay and the cost of maintenance are greatly increased by the practice of so arranging the machinery as to provide, at all times, a light of very great power: whence follows that the machinery must be placed at some distance from the lantern, and two men

Digitized by Google

must always be on duty; one man in the lantern, and another with the machinery.

The essentials for a cheap electric lighthouse are, that for ordinary states of the atmosphere there shall be provided a plant under the easy control of the light-keeper himself, which shall be precisely adapted to produce that amount of light which is wanted in ordinary states of the atmosphere; but for thick weather there shall be provided a much more powerful engine and dynamo, available also as a reserve in case the smaller machinery from any cause breaks down. The occasional machinery may be more remote from the lantern, as it is a small matter to require a second man to work on the comparatively rare occasions when the maximum power is needed. A small gas engine and a dynamo machine can be placed without any crowding in the room immediately below the lantern, and arrangements can be made whereby the light-keeper, whether he is in the lantern or in the engine room, can ascertain at a glance whether the arc is in its proper position, with an error of less than one millimeter. The attendance on the lamp, rotating apparatus of the lens (if a revolving light), engine and dynamo, would be easy when the whole is brought together, so as to be under observation at once; in fact the gas engine, dynamo, and lamp constitute together a gas burner which, though consisting of many parts, is automatic throughout, and requires nothing but the constant presence of a custodian, exactly as the gas lamp in a lighthouse requires a custodian, as a guarantee against failure. The same end, viz., the concentration of the whole mechanical and electrical apparatus under one pair of eyes, could be attained, of course, in other ways. Accumulators could be used, or a petroleum engine.

In order to give definiteness and afford facilities for criticism, the better course will be to describe a suitable machinery; state what it will do, what attendance it will require, and what it will cost. The author proposes, then, for an electrical lighthouse where small outlay is essential, the following:—A Dowson gas producing apparatus and gas holder, the generator and superheater being in duplicate, each capable of making 1,200 feet of gas per hour, the gas holder having a capacity of 3,000 cubic feet.

An 8 h. p. nominal Otto gas engine and series-wound dynamo machine, placed in a room near the base of the tower, and copper conductors to the lantern, the dynamo having magnet coils, divided into sections so as to supply a small current when required.

A 1 h. p. nominal Otto gas engine and dynamo machine, placed in the room immediately beneath the lantern floor, with gas pipe from the gas holder; three electric lamps, to receive either carbons 25 millimeters in diameter or any lesser size, with complete adjustments for accurate focussing; one paraffine lamp as a substitute; an optical apparatus of the second order of 70 centimeter focal distance. The cost of this apparatus would depend upon the character of the light it was intended to exhibit. To fix ideas, let it be assumed that the light is to be a half-minute revolving light, showing all round the lighthouse. There could then be supplied a sixteen-sided apparatus with pedestal and revolving machinery. Provision would be made in the optical apparatus for giving the horizontal and vertical divergence desired by the same methods successfully used in the lighthouses of Macquarie and of Tino.

Two focussing prisms would be fixed to form magnified images of the arc, on pieces of obscured glass let into the pedestal floor, so that the keeper, whether in the lantern or in the engine room, could see at a glance the state of the arc, and observe whether it is of proper length with the carbons in line, whether it is exactly at the right height and in the centre of the apparatus. An error of one millimeter would be glaringly apparent, and call for immediate adjustment, although its effect would be only a displacement of the beam 5′ of angle.

The lantern would be 10 feet diameter, with bent plate glass.

The cost of the whole above described would be materially less than the cost of a first order light and lantern with oil lamp and large burners.

Now what result would be obtained? In fine weather the small engine would be used. Its effective power on the brake is fully 1½ h. p.; from this 1½ h. p. the dynamo machine produces considerably over 800 watts, say 800 watts in the arc itself, or 20 amperes through a fairly long arc of 40 volts. Of course the value of this in candles depends upon the color in which it is measured, and the direction in relation to the axis of the carbons. In red light the mean over the sphere would certainly exceed 1,200 candles. In clear weather or in slight haze or rain, the beam of this light through the lenses would be much more powerful at the horizon and on the more distant sea than any single focus light with oil or gas as the illuminant, and would at least be fairly comparable with anything yet exhibited with oil or gas whether triform or quadriform. But on the nearer sea the illumination would be reduced, so that no annoyance would be caused by dazzling flashes. In thick weather, or indeed in any weather when there was a doubt as to the visibility at the horizon of the lower power, the large engine would be used under the superintendence of the second keeper. This engine will give 10 h. p. on the brake, and there is no difficulty in obtaining 85 per cent. of this as useful electrical energy outside the machine, that is 6,340 watts. From this deduct 10 per cent. for the leads and the lamp and for steadying the arc, leaving 5,710 watts in the arc itself, or 114 amperes, with a difference of potential of 50 volts. Having regard to the fact that the optical apparatus here proposed acts upon a larger portion of the sphere than that used in the South Foreland experiments, that the vertical divergence is less, and that the potential difference is greater and the current continuous, although less in quantity, it may safely be assumed that the power of the resulting beam would not be inferior. It hence follows, from the South Foreland experiments, that in any fog the flashes would penetrate farther than those of any existing gas or oil light. The increased size of crater, compared with that produced by the current of 20 amperes, will give increased vertical divergence, and so cause the maximum illumination to be attained at a less distance from the lighthouse. The attendance of two men would suffice for all the duties of the lighthouse, because under ordinary circumstances one man only need be on duty excepting for two to three hours whilst gas is being made. The consumption of coal would be 4 lbs. per hour of lighting, of water about one-half gallon, of carbons about four inches. The whole cost of maintaining the light would differ little from that of an ordinary oil light of the first order.

Though it be the fact, that it is possible to exhibit an electric light at moderate cost, it does not follow that it is suitable for all ocean lights. There is no room in a rock lighthouse tower for a gas plant, and few would at present be prepared to recommend a petroleum engine burning oil of a low flashing point. The light-keeper again must understand a gas producer, a gas engine, a dynamo and an arc lamp, instead of only a paraffine lamp and burner, and arrangements must exist for repairing the more extensive machinery. Such considerations will justly weigh against the use of the electric light in remote stations and in countries where the labor available is not capable of much training.

It may possibly be said that in this paper no definite conclusions are reached as to whether electricity or some other agent is the best source of light in lighthouses generally, nor yet, if electricity be adopted, what is the best way of producing the light and optically dealing with it. The answer is that it is impossible on many points to arrive at general conclusions. Each case must be judged according to its special circumstances.

The paper is accompanied by a lithograph and tracings, from which the figures in the text have been prepared.

Digitized by Google

THE SHORT-NESMITH ELECTRIC RAILWAY.

A NEW SYSTEM IN WHICH THE CARS ARE RUN IN SERIES ON A SINGLE LINE CONDUCTOR.

In the month of April 1885 a company was organized in Denver, Colorado, under the name of the Denver Electric and Cable Railway Co.

This company was formed for the purpose of building and operating an electrical railway in the streets of Denver. It at once adopted a plan proposed by Sidney H. Short, then professor of physics in the University of Colorado, Denver.

Mr. Short called the attention of the gentlemen comprising this company to his series system of electrical railway, and a small piece of track, between three and four hundred feet, was laid in a circle in the university grounds. A small car, named Joseph Henry, was built, and carried many hundreds of people over the track.

The success of this little road encouraged the company to make more extended experiments in this direction.

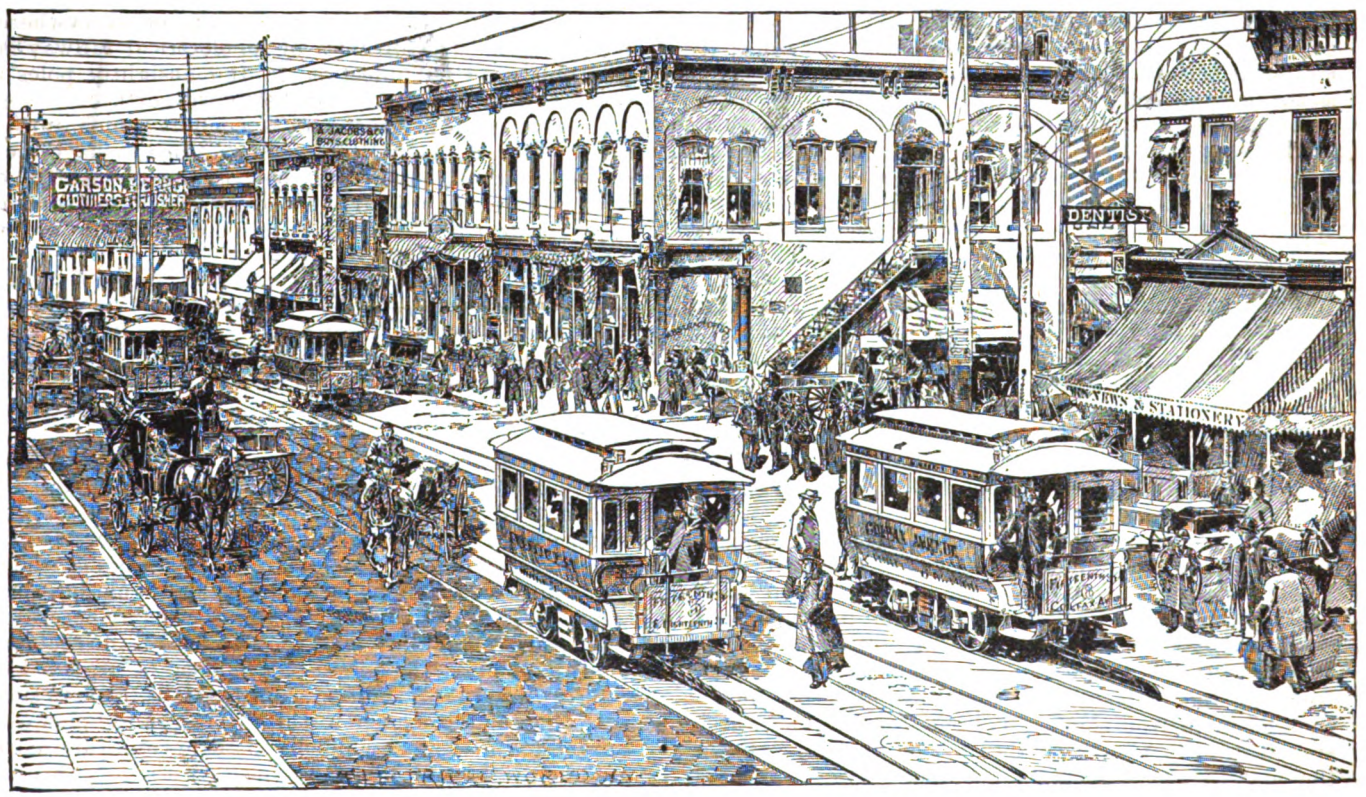

Electric Railway Cars on Fifteenth Street, Denver, Colorado.

This first road was built on the following plan. Two bare conductors were laid side by side along the track in a small conduit placed between the rails. The conductors were small and supported on insulators attached to the cross ties. The conductors were cut into sections in order to test the working of this system of conductors. Switches operated by the current connected the two conductors in multiple arc, making them practically one conductor having the conductivity and sectional area of the two. These electrical switches at the same time connected the ends of the sections of this double conductor making one continuous conductor along the entire length of the track. The ends of this working conductor were connected by means of wires with the dynamo. When a car was placed on the track and had its brushes or contact springs one on each of the parallel conductors of any section, the electrical switches at each end of that section would at once disconnect one of these conductors at one end and the other at the other end, leaving the only path for the current along one conductor through the motor to the other conductor and the line again. These sections could be made any convenient length from that of an ordinary car to a block or a mile. A car could be on every section and the same current pass through all of them.

Mr. Short maintained that the only way to make a successful electrical railway was to use a constant current of small quantity; run the cars in series like arc lamps or telegraph instruments, and vary the electromotive force with the power required to operate the line of road. This principle has not been in the least varied from since the enterprise was begun, but many modifications in the details of construction have been made from time to time.

The two conductors used in this arrangement were intended to carry the current in the same direction at the same time along the track and, as stated before, they became electrically one conductor. At the junction of two sections there were four contacts to be operated by an electrical circuit closer which was necessarily a complex and delicate piece of mechanism to keep in good working order, especially when placed on the street where it was liable to injury. Mr. Short at once began to devise some means of combining the two wires into one in order to do away with one pair of contacts at the junction of the sections and also to lessen by half the chance for leakage from the insulating supports. He found only one thing to do—shorten the sections of the conductor to the length of one car or train of cars. This increased the number of circuit closers greatly, but at the same time increased the flexibility of the road as cars could be run as close together as they could be placed on the track.

A contact brush must be placed under each end of the car or train of cars to make electrical connection with the conductor, so that there will always be a circuit closer between these brushes, as shown in figure 1. The circuit closer between these two brushes must, however, be kept open as long as it remains between these brushes and must close the line as soon as the brushes pass beyond it. Electrical means for accomplishing this were devised, but it was open to the same objection as the one referred to above, and with the large increase in the number this

Digitized by Google

objection became still greater. A mechanical circuit breaker must be provided. Mr. Short presented this problem to Mr. John W. Nesmith, a practical mechanic of long experience and of much ingenuity, and asked him to devise some mechanical plan for keeping the spring or circuit closer, shown in figure 1, open so long as the car was over it. Mr. Nesmith proposed that a long slender bar of insulating material be stretched between the two current collectors or brushes, this bar to slide between the contacts at the ends of the sections of the conductor, and keep them apart so long as the car is passing, as shown in figure

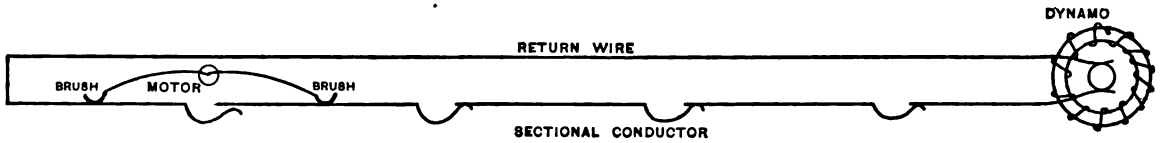

FIGURE 1.

2. In July 1885, this second plan was tried on about three hundred feet of track with the same car used in the first experiment. A brush at each end of the car made contact with two sections of the conductor; a leather strap stretched between the two brushes kept the springs apart as the car passed over the circuit closer. This experiment was a perfect success and the desired end was obtained.

The Denver Electric and Cable Railway Co. at once ordered the material to lay one-half mile of track upon this plan, and also two motors and one dynamo of the Short type. A small engine made by the Colorado Iron Works,

The experience of a few days showed this plan to be impracticable on account of the difficulty of keeping this conductor insulated, and the further difficulty that a very little sand and dust in the tube stopped the brushes. The most serious trouble to overcome was the leakage due to imperfect insulation. This has been and is to-day, one of the chief obstacles in the way of the practical operation of any form of electrical street railway. It requires much and careful study on the part of electrical engineers. This difficulty has driven most of the electrical railway conductors overhead on poles, making these systems impracticable for large cities. A conduit system must eventually be used in the streets of even small cities, the objection to overhead electric wires of any kind being everywhere on the increase. The inventor of an electrical railway must face this growing objection to the unsightly poles and wires, and put his conductors below the surface.

In wet, muddy streets, in a conduit which must be small and must be built of iron or stone to have the required strength, how will it be possible to insulate conductors, bare throughout their entire length and supported every few feet? Mr. Nesmith proposed to use an ordinary

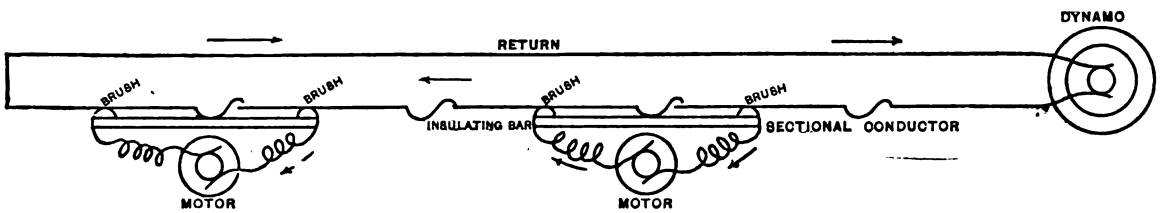

FIGURE 2.

of which Mr. Nesmith is president, was put in place near one end of the line. This engine was of the ordinary slide valve form with a cylinder 9″ x 12″. Two elegant coaches were built by Woeber Brothers in Denver. The conductor used in this trial was a slotted copper tube about one inch inside diameter. Each tube was about 16 feet long and embedded in asphaltum and tar, the whole encased in an iron shell, a slot cut through, and was then spiked to the ties, with the slot at the top. Between the ends of these sectional conductors were mechanical contact closers. The car was provided with a contact

underground cable to be laid in the ground outside of the conduit—leaving the conduit for the passage of the current collecting brushes. Mechanical circuit closing springs were to be used in the conduit at intervals as before. By this arrangement only the exposed ends of the sections of the conductor at the circuit closers must be provided with careful insulation. This was a great step towards success with the conduit system. This change in the plan of the conductors made a new device for connecting the current gatherers necessary. It must consist of the long insulating bar to keep the circuit closers open, and also of some device

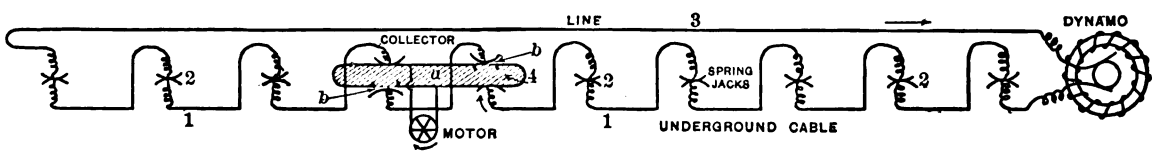

FIGURE 3.

1, SECTIONAL CONDUCTOR. 3, RETURN WIRE. *a*, INSULATING BAR.
2, CONTACT SPRINGS (SPRING JACKS). 4, CURRENT COLLECTOR. *b*, CIRCUIT BREAKER.

brush at each end which fitted into the tubular conductor like a gun-wiper brush. Between these brushes was stretched a long flexible rubber cylinder which almost filled the tube. As the car moved along, the forward brush was pushed through the tube and contacts at the ends, the rubber rod followed and kept the contacts apart until the rear brush had passed, and the current was forced to pass from one brush through the motor and back to the other brush. In October 1885, this half mile was completed, and for the first time a car driven by electricity made its appearance on Fifteenth street in Denver.

for always diverting the current from the line through the motor on the car. At the same time it must neither short circuit the motor out of the line, nor open the circuit of the line, for in the first instance the motor would stop, and in the second the current collector and circuit breaker would be destroyed by flashing, and the insulation of the generator and underground wire would be endangered.

Mr. Short took this matter in hand and devised a very ingenious electrical current collector which has gained the name of "arrow" from its form. Figure 3 shows the line with the current gatherer; figure 4, the construction of

Digitized by Google

the current gatherer, and figure 5 the current gatherer in a circuit closer. 4, 5 and 6, figure 4, are three sections of the underground cable connected with the two circuit breakers B and B. If the current gatherer were removed from the breakers B and B, these breakers would close and the line be continuous. This current collector is made of a slender bar of insulating material somewhat longer than the section of the conductor between circuit closers. The metal strips 1 and 2 are fastened around the entire edge of the insulating bar except at 3 and 3, where there are short insulated breaks in them as shown. Wires pass from these metal strips 1 and 2 to the motor. The current passes into strip 2 from section 5 of the conductor through the motor into strip 1, and out on the other section at 6, as shown in the figure. The middle section, 4, of the house and the post office. Ordinary cross-ties were used, upon which were laid 20 pound T rails. Notches were cut in the centre of the ties to form the conduit through which the arrow or current collector should pass. Planks were spiked to the ties covering the notches, except a small slot in the centre. The edge of this slot was protected by strap iron nailed to the planks. Under one of these planks was laid a Waring lead encased cable, with a conductor of No. 3 B. and S. gauge. Circuit breakers were placed every 25 feet, and the cable cut and attached to them. The two coaches built in Denver were placed upon the track. Each car had a motor of the Short type, made in Denver, and was supplied with both reversing gear and speed gear. Each motor weighed about 1,500 pounds. Tests were made of the efficiency of these motors when

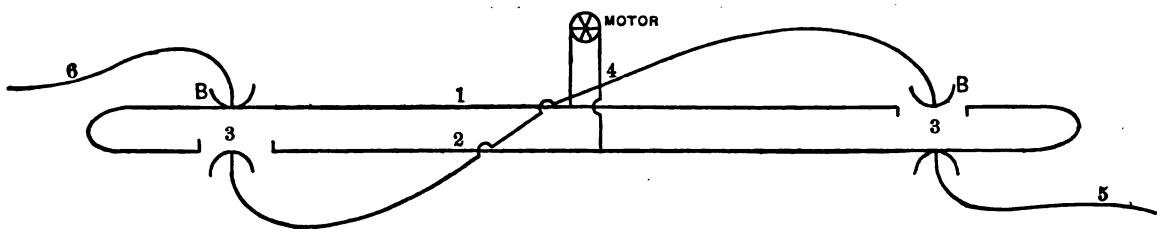

FIGURE 4.

conductor is cut out of circuit when the current collector is in the position shown in the figure. If the arrow be moved in either direction it will be seen that no flashing can occur, neither can the line be short circuited. This current collector is 2½″ by 1½″ in section and about the length of a car. It is supported in the conduit by attachments passing down through the slot.

In November 1885 this company put down on the same street 500 feet of the new line of insulated wire for one of these current collectors. It worked perfectly. During this entire winter of 1885 and 1886, this little line was worked in all kinds of weather—snow, rain and mud—the track was flooded. The severest tests possible were made to prove its merits and it never failed.

The Denver Electric and Cable Railway Co. had procured from Mr. Short, the right to use and manufacture for its own use all the electrical railway appliances of his they were developing from 5 to 8 h. p., with a current of 25 amperes, and they showed an efficiency of 80 per cent., *i. e.*, for 10 h. p. of electrical energy put into them, they returned 8 h. p. at the Prony brake placed on the armature shaft. This is the average of many tests. The motors were placed on frames which were hung from the axles of the car trucks and carefully insulated from them. On the armature shaft of each motor was placed a raw-hide pinion. This pinion drove an iron gear on a counter shaft which had its bearings attached to the same frame. The counter shaft carried another pinion which meshed with the large gear of the driving axle of the car. This method of gearing was direct and positive, made little noise, and admitted of a simple and efficient reduction of speed from the motor armature shaft to that of the car axle. The small engine and dynamo first placed in the plant were used to furnish the power. On the 31st of July,

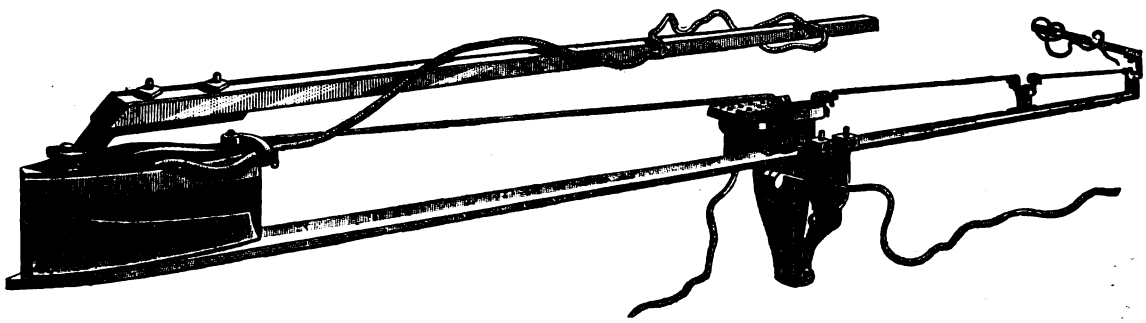

FIGURE 5.

invention in the state of Colorado. A new company, the United States Electric Co., comprising many of the gentlemen in the local company was organized in August of 1885, for the purpose of developing Mr. Short's inventions. They secured his services as electrical engineer, and have arranged to own and control throughout the world his inventions, together with those of Mr. Nesmith.

The officers of this company are, Mr. Wm. N. Byers, president; Sidney H. Short, electrician and electrical engineer; John W. Nesmith, mechanician; Edward Grace, secretary.

In June and July of 1886, the new company put down under contract 3,100 feet of electrical railway, upon the last plan, for the Denver Electric and Cable Railway Co. This track was laid on Fifteenth street between the court this road was started, and the car moved from one end of the track to the other without a hitch. This road was run constantly for three months, two men being required to operate it, one at the engine and one on the car. Only one car was run regularly as the line was so short. This car made six round trips per hour on a running time of 15 hours per day. No difficulty was experienced in operating this road. The success of the system and the enterprise was assured.

In the meantime, the Denver Electric and Cable Railway Co. consolidated with another company, The Denver Railway Association, and the new company took the name of the Denver Tramway Co. This company contracted with the Denver Tramway Construction Co. for the equipment of its lines with the improved system of electrical railway.

Digitized by Google

The work was immediately begun, and 3½ miles are now fully equipped and in operation with seven cars. A new conduit of cast-iron was used, and the slot narrowed to five-eighths of an inch. The conduit was enlarged to 7″ by 5″ and made more substantial and durable. As Denver streets are not paved it is difficult to construct a good road-bed. Large buildings have been erected, and a Lane and Bodley 16 by 42 Corliss engine put in place. A 100 h. p. Brush dynamo and a 100 h. p. Short automatic dynamo for constant current were added to the plant. Five Brush motors were placed under as many new cars, and the last of November the new machinery was started.

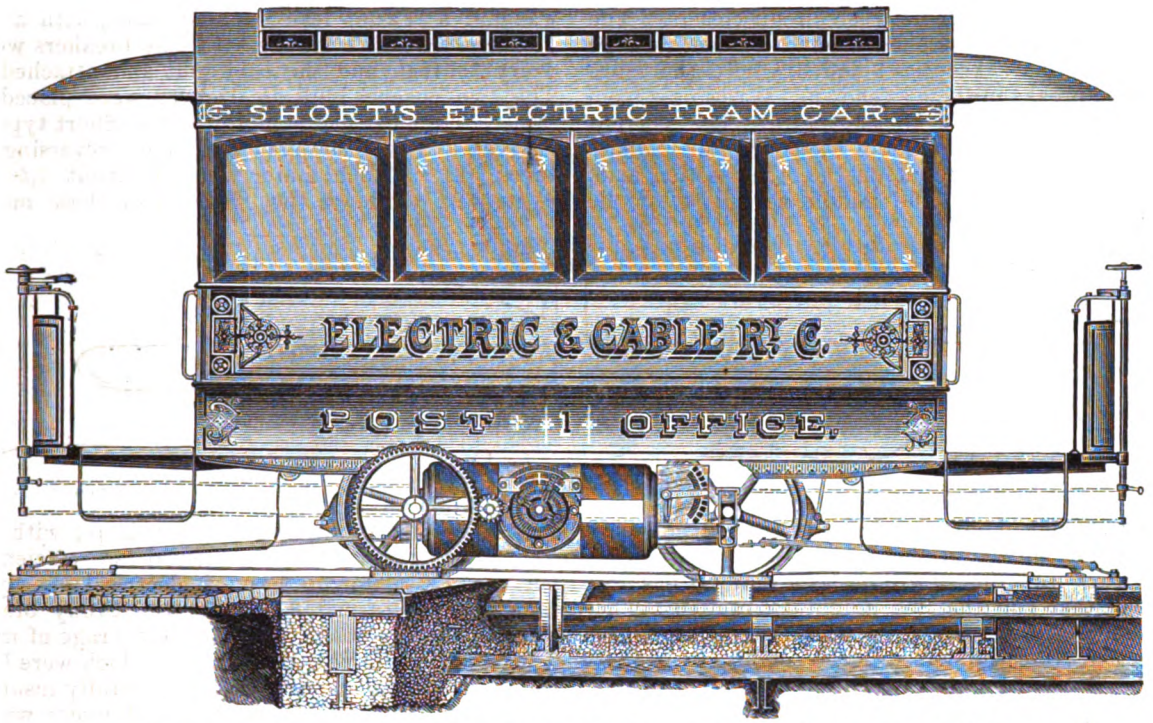

FIGURE 6.—SHOWING SECTION OF CAR TRUCK AND CONDUIT, WITH COLLECTORS IN POSITION.

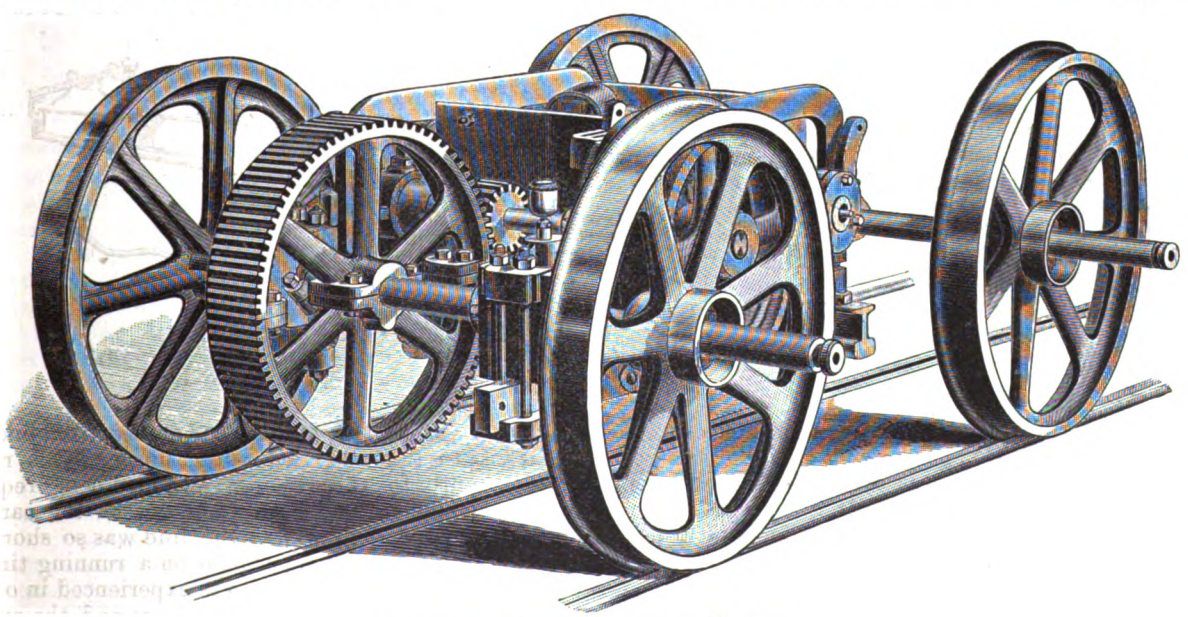

FIGURE 7.—MOTOR, TRUCK AND GEARING.

The road now in operation comprises some of the most difficult problems in electrical railroading. Starting as it does in the east end of Denver, on top of Capitol Hill, a single track passes down a grade of 350 feet to the mile. At the bottom of the hill it crosses two horse car tracks, then curves into Fifteenth street. When it reaches the court house it divides into a double track with automatic slot and track switches, which always turn the down car upon the right hand track. The double track continues for three-fourths of a mile, and on its way crosses five horse car tracks, two on curves. It then returns to a single track with automatic switches. This single track crosses five steam railway tracks, then enters a turnout, crosses another horse car track, and crosses the river as a double track on a bridge 200 feet long, two more steam railway tracks and another horse car track. Again it becomes a single track and branches into two lines, one going to the north, the other to the east, and climbs a grade of 350 feet to a mile, and about two blocks in length.

This line of track takes the cars across the city through the most densely settled business portion, where the traffic is heavy. The road has been running through the severest

Digitized by Google

winter weather. A heavy snow fell soon after the road started, and snow plows were put on the cars, which cleared the track perfectly while making their regular trips. Each car is provided with sand boxes and sand pipes, and the track can be sanded from either end of the car by the driver.

The driver has a simple handle which is placed on an upright shaft in front of the dash board of the car with which he controls the speed and reverses the motion of the car. The cars pass a given point going in the same direction every ten minutes, making an average speed of six miles per hour. However, cars have been run over the line at night when the streets were clear, at the rate of 25 miles per hour.

The trucks and gearing, figure 7, used in this system are of the simplest kind. The ordinary street car wheels and axles are provided with an iron frame supported upon spring pedestals. On this frame the motor is fastened. On the shaft of the motor is a pinion which drives a gear-wheel on a short counter shaft. This counter shaft carries another pinion which meshes with a large toothed gear wheel keyed to the axle of the car wheel. The greatest difference between pinion and gear being as one to five. Very little noise is noticed. The motor and its mechanical connections being wholly mounted on the truck, independently of the body of the car, the system can be readily applied without remodeling materially the cars now in use on horse car lines.

The conduit shown in figure 8 is so arranged as to admit of its being put down on existing horse car lines. It is only necessary to remove the pavement in the centre of the track, dig a trench down to the cross-ties and put down the cast-iron conduit, which is made complete in sections of eight feet. Before the pavement is relaid the lead encased cable is laid along at one side, as shown in the cut, all insulated and complete. The change from horses to electricity can by this method be made without interfering with the traffic of the road in the least.

The same current which feeds the motor is used to light the cars with incandescent lamps and to operate an alarm bell to warn persons of the approach of the cars. The cars can be moved forward or backward, and can be governed from either platform.

A few days since indicator cards were taken from the engine while three cars were in service, which showed an average of 32 h. p. delivered to the driving belt. A constant current of 40 amperes was passing over five miles of No. 3 B & S gauge conductor.

The resistance of the circuit is seven ohms, hence the circuit alone used 15 h. p., which left 17 h. p. for three cars, the friction of belting, shafting, dynamo, etc. This gives an average of 5.66 h. p. as necessary for each car.

One of these cars was climbing a grade of 350 feet to the mile at the time of the tests, and it is safe to say that it was using one-half the power delivered to the cars. Each car can be run at the expense of 5 h. p. delivered at the engine after the power necessary to overcome the line resistance has been deducted.

A good Corliss engine will deliver 5 h. p. for one hour with the consumption of 15 lbs. of coal, so it will require for each car 300 lbs. of coal per day of 20 hours. At $3 per ton the fuel for each car will cost 45 cents per day. It will require a constant expenditure of 15 h. p. to send the current over the line, and this amount will not vary with the number of cars on the line. This will cost $1.50 per day for coal.

The conductor used in this city is too small, as it was intended for a 30 ampere current, and was not changed when the 40 amperes were adopted, so the loss on the conductor is abnormally large.

The economy of this series road can be realized better when compared with the same system of tracks and conductors where the cars are run in multiple arc.

Suppose the same conductors be arranged in parallel, and the cars placed in derived circuit upon them. The average resistance could then be reckoned as 3.5 ohms (as with all the cars are at the centre of the line), 40 amperes being required to run each motor.

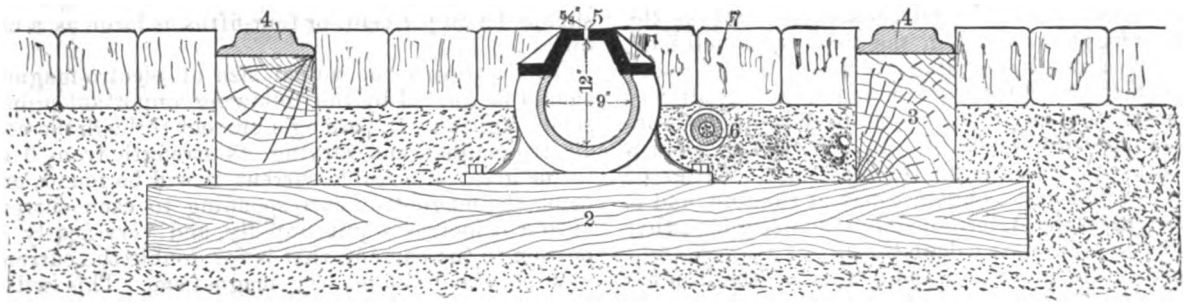

FIGURE 8.—SECTION OF ROAD-BED.

2, TIES; 3, STRINGS; 4, RAILS; 5, SLAT IN CONDUIT; 6, CABLES; 7, PAVEMENT.

Power required for	Multiple arc.	Series System.
1 car	12½ h. p.	20 h. p.
2 cars	40 "	25 "
5 "	212 "	40 "
10 "	800 "	65 "
20 "	3102 "	115 "
40 "	12210 "	215 "

It may seem unfair to compute the power necessary to run cars in multiple arc, using such small conductors as No. 3, but large conductors cost more, and the series road runs with great economy with the small conductor.

In the series road the larger the number of cars the less the percentage of loss or waste on the conductor, which is just the reverse of the multiple arc system. This seems to be the one thing which excludes the multiple arc system of electrical railway from large systems where a great number of cars are in operation.

The series system is the only one which is applicable to long lines of street cars where there are large numbers of cars in service. The results obtained in Denver prove that by using this series system, electricity becomes the cheapest motive power for street railways.

DYNAMIC ELECTRICITY.

BY CARL HERING.

(Continued from page 86.)

CHAPTER VII.—FIELD MAGNET FRAMES.

THE general principles underlying the construction and designing of electro-magnets, have been given in chapters

Digitized by Google

iii and iv[1]. As the field magnets of a dynamo usually serve also as a frame work for the machine, their design and construction should be based on mechanical considerations as well as to meet the requirements of good magnets. For instance, it is well known that wrought-iron magnets of the same size as those of cast-iron are more powerful and more economical, but if the nature of the frame of the machine which constitutes these magnets be such as to increase the cost very greatly, it is evident that it will be more economical in such cases to use cast-iron and to make the magnets larger. A cast-iron magnet can in all cases be made to generate as strong and large a field as one of wrought-iron (though not of the same intensity per square inch) by simply making it as much larger as is required by its smaller capacity. The efficiency of the cast-iron magnets, that is, the amount of useful magnetism generated per watt of electrical energy in the coil, may not be as great as the efficiency of wrought-iron magnets, partly because they are not capable of carrying the same number of lines of force per square inch of cross-section, and partly because, being larger in diameter, the wire of the coil has greater length and resistance. But as the amount of energy consumed in the field is, in well built machines, only a small percentage, it would not add very much to the efficiency of the machine to reduce this already small percentage by employing the more efficient and more expensive wrought-iron magnets. In this, as well as in a number of other points, it is, therefore, a mere matter of choice between first cost as against cost of running, and it may in most cases be determined by the designer either by trial or by approximate calculations.

The general rule regarding the quality of the iron for the field magnets is to have it as pure and as soft as practicable, considering, as just described, both the first cost and the gain in the magnetic qualities. Wrought-iron which has been rolled, usually has a "grain" somewhat similar to that of wood, the fibres running in the direction of the length of the bar. Such iron magnetizes better in the direction of the fibre, than across the grain, and it is therefore preferable, wherever it is possible, to so place the iron that the lines of force run parallel to the grain. Wrought-iron in the form of fine wire or thin sheets may usually be relied upon as being soft, but in this form its use is limited to small machines and to armature cores.

When cast-iron is used it should be as soft and as free from impurities as possible. It is preferable whenever possible, to have it annealed, and when not too large in bulk, to have it converted into malleable iron; this is especially to be recommended for small machines and motors. Corners, projections, and thin edges should be avoided as much as possible on the castings as they are apt to chill while being cast, thus making them quite hard, and destroying their magnetic qualities. Corners and edges should be well rounded off, and whenever thin projecting edges are necessary for mechanical reasons they should be cast quite thick and massive, and may afterwards be planed or turned down if necessary. It is preferable to cast the iron in dry moulds and to allow it to cool as slowly as possible, preferably for three or four days in a gradually decreasing fire.

The cores of the magnets are usually the parts where the lines of force are most dense, as it is the smallest cross-section through which the magnetism has to pass. A very good and economical magnet can therefore be constructed by making these cores of wrought-iron and the pole pieces and yoke pieces of cast-iron.

The relative value of cast and wrought-iron magnets may be deduced from the following figures. Sylvanus Thompson states that cast-iron magnets will give about 60 per cent. of the effect of wrought-iron magnets of equal size. For instance, if a wrought-iron magnet can have 100,000 lines of force passing through every square inch of its cross-section of core, at saturation, a cast-iron one will have 60,000 at saturation; to be equal to the wrought-iron magnet it would have to be two-thirds again as large in cross-section of core, because every $1\frac{2}{3}$ square inches will then contain the same number of lines of force as one square inch of the wrought-iron core. A wrought-iron magnet, according to this statement, need be only 60 per cent. or three-fifths as large in cross-section as a cast-iron one equal to it in effect. The length of the core will depend in general only on the amount of wire which it is necessary to wind around it in order to generate this magnetic effect in the core.

Kapp[2] states that in two similar machines, differing only in having the field magnets of the one made of cast-iron and of the other of wrought-iron, the electromotive forces generated were 80 and 100 volts respectively. As all other conditions were the same, it follows that the result must be due solely to the magnetism, and that, therefore, the cast-iron has 80 per cent. of the effect of wrought-iron. According to this, a cast-iron core should be one-quarter or 25 per cent. larger in cross-section than an equivalent wrought-iron one, and *vice versa*, a wrought-iron one should be 80 per cent. or four-fifths as large as a cast-iron one.

To determine the actual size of electro-magnets, one should be guided by the following important property of such magnets. In passing a current through the coil of an electro-magnet, and varying its strength from 0 amperes to the greatest possible current, it will be found, on measuring the magnetism corresponding to each current, that at first it increases quite rapidly, and very nearly in proportion to the current, that is for double the current there will be about double the magnetism. This will be the case up to a certain point, when the conditions will suddenly change, and on increasing the current still more the magnetism will increase only very slightly. At this point, called the point of saturation, the action of the iron in adding its share to the magnetism, appears to cease; all the increase above this point appears to be that due to the current itself, as if the magnet were a mere solenoid, or coil without iron. Up to this point the magnetism is obtained cheaply and economically, but above this point the increase in magnetism is so small and requires such a large expenditure of current, electromotive force and wire, that it is prohibitive in well built and efficient machines. It is of very great importance, therefore, to guard against over-saturating to any great extent the magnets or any part of the magnetic circuit of the field magnet frames, as it will always be found that it takes less copper or less electrical energy, to generate the same amount of magnetism in a larger core which is not over-satuated than in a small over-saturated core. This is especially important in small or cheap machines, or in those in which there is a scant allowance of iron in the magnetic circuit. As the actual additional weight of iron required to bring the magnetization of an over-saturated magnet down to the saturation point, is so small, and therefore inexpensive, there is in general no reason why it should not be added. As iron itself appears to add to the lines of force which are due to the current alone, there is an additional advantage in using as much iron as possible, the magnetism of the iron itself requiring very little electrical energy to render it useful. When cast-iron magnets are used there is a still further advantage in using larger, massive magnets, as the iron is more apt to be cast soft than when they are small and thin. How to find out whether the magnets are over-saturated too much will be explained in a subsequent chapter. Some makers prefer to over-saturate the magnets to a slight extent because the field is then less sensitive to slight changes of the current in the coils; in other words, the machine is steadier in its action. If this is to be done it should be to a slight extent only. But as machines are generally regulated by altering the current in the field, it would seem that it is desirable to have the field

1. Electrician and Electrical Engineer, June and August, 1886.

2. *Electrician*, London, May 22, 1885, p. 23.

Digitized by Google

as sensitive to variations of current as possible, in order that it shall require less variation of this adjusting or regulating current.

Scientists have up to the present time failed to give the dynamo builder any practical and reliable data and rules by means of which the actual sizes of the parts of a field magnet frame may be determined with any degree of certainty from the intensity and size of the field required by the armature. In the absence of this greatly needed information, the designer of dynamos will have to use his judgment, if he has no access to a finished model machine, from which to obtain the desired data. The following relations may be used as a guide in determining the approximate sizes.

Every line of force must make a complete closed circuit around its exciting current, as explained in chapter iii. For instance, in the well-known form of magnet frame shown in figure 24, the lines of force will pass through the

Fig. 24

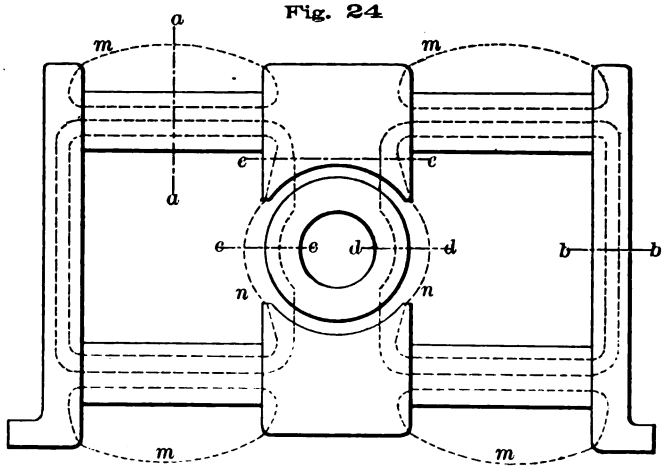

iron as shown in dotted lines, the only portion of them which is rendered useful, that is, which may be cut by the armature wire, is that passing from the pole pieces through the air space to the armature and out at the other pole piece. Iron is saturated when a certain number of lines of force pass through every square inch of its cross-section; if, therefore, the iron was of the same quality throughout, and if these useful lines of force were the only ones, it is readily seen that the cross-section of the yoke piece at *b b*, should be at least equal to that of the core at *a a;* the cross-section of the pole piece at *e e*, should be at least twice that at *a a*, as it contains the lines of force from both halves of the frame, as seen from the dotted lines. If a Gramme ring armature is used, the lines of force divide equally, half of them going through each half of the ring; its cross-section *c c* = *d d*, ought, therefore, to be equal to *a a;* if it is a cylinder armature the whole cross-section *c c d d* should be equal to twice *a a*. As the lines of force generated in the magnet *a a*, return through the other core below it, it follows that in such a frame each core must be made large enough to contain all the lines of force generated in it and in the other core belonging to that pair, considering them as the two parts of a U magnet. In other forms of frames, it may be readily determined what the relative cross-sections should be, by merely following the lines of force throughout their circuit and giving each line of force the same area of iron to pass through. For instance, in the Edison form, one pair of cores take the place of the two pair in figure 24, and should therefore be twice as large in cross-section.

Referring to figure 24, it will be noticed that a few of the lines of force, as *m*, *m*, *n*, *n*, do not pass through the armature and are therefore lost, representing so much leakage, as it might be called. But as these all pass through the cores of the magnets, allowance should be made for them in the cross-section of these cores and they should therefore be larger in comparison to the core of the armature, than if there was no leakage, as was supposed in the above mentioned rule. It is not possible to state just how much to allow for this leakage, as it depends greatly on the detailed parts. For rough calculations it might be estimated that in the forms shown in figure 24, about one-quarter of the total number of lines of force are lost by this leakage, in which case the cross-section at *a a*, should be one-third again as large as that at *c c*.

The iron of the armature is generally of much finer quality than that of the field magnets, and therefore its cross-section per line of force may be made smaller. Taking the results of Kapp's experiments for wrought and cast-iron given above, it would follow that the cross-section of a wrought-iron armature may be made 60% of that of a corresponding cross-section of a cast-iron magnet core. This would still further increase the cross-section at *a a*, figure 24, over that at *c c*. On the other hand the cross-section of the armature core, which ought to be laminated, is not entirely composed of iron; allowance should therefore be made for the spaces occupied by the insulating layers, or the air ventilation space.

There is no objection to making the cross-sections at any point larger than that which would be required by the rules just given, provided it does not uselessly increase the length of wire on the coils or armature. The important point is that they should not be smaller than that required by these rules. For instance, the yoke piece at *b b*, or the pole piece at *e e* may be made as much greater as is desired, the effect will even be advantageous, as it adds to the number of lines of force inherent in the iron. The two places where there should be no more iron than is absolutely necessary are the cross-sections of the cores *a a*, and that of the armature *c c*. The latter, however, may be limited by the nature of the armature and its winding, and for cylinder armatures it may often have to be greater than that required by the number of lines of force; in Gramme armatures, on the other hand, it is often much too small for the passage of the required number of lines of force and is therefore saturated long before the field magnets are at their maximum intensity; this causes neutralizing reverse currents in the inside wires, great leakage of otherwise useful lines of force, and consequent bad sparking in the otherwise dead or short circuited coils in the neutral field. The objection to increasing the cross-section of the cores at *a a*, above what is absolutely necessary is, that it increases uselessly the length of the wire of the coils, which in well built machines is an important item in the cost of the material for a machine.

The armature current itself generates quite a number of lines of force in its core. These partly leak through the air and return to the other side of the core, but most of them return through the frame of the field magnets together with the other lines of force and in the same direction. They therefore help to saturate the iron. If this counter-magnetization of the armature is small, as it should be in well built machines, the effect will not be great; but in armatures with many turns of wire the effect is not small and should be allowed for by an additional increase in the cross-section of the iron.

In the foregoing chapters it was shown how the number of lines of force required by the armature may be calculated approximately. If it were known how many lines of force could be generated per square inch of cross-section of magnet core for different qualities of iron, and if it were known how many of the lines of force were wasted by leakage, it would be very easy to calculate the necessary cross-section of the field cores. No complete and reliable set of such figures have been published, but the following may serve as a rough guide. Kapp[3] states that in wrought-iron field magnets of hammered scrap, 108,000

3. Proceedings of Society of Telegraph Engineers, Nov. 11, 1886,—"Characteristics of Dynamos."

Digitized by Google

lines of force may be passed per square inch of cross-section; in armatures of charcoal-iron, well annealed, 150,000, and of discs of similar iron, 132,000. Fleming states that in a long magnet of soft annealed iron, the greatest strength is 116,000 lines of force per square inch. The same authority states that in the best dynamo the intensity of magnetization is from about 40,000 to 65,000 lines of force per square inch, by which we suppose he refere to the magnet cores and not to the armature field. In the Edison and Weston machines, tested by the Franklin Institute, a rough estimate gives about 70,000 to 90,000 in the cores.

If a suitable machine of a similar style to the one to be constructed, is at the disposal of the designer, it is very easy to determine from it, as follows, what the cross-section of the cores should be for a larger or smaller machine of the same general type, or of one differing only in the armature. Run the machine with a separate exciter and without a current in the armature; measure the potential on open circuit for gradually increasing exciting currents. When the increase in potential begins to be much slower than the increase in the exciting current the machine is saturated. With this intensity of field at saturation, let the armature current flow through its proper external circuit and measure its current and potential. From this and the detail dimensions of the armature the number of lines of force in the field can be calculated as described in the previous chapters. Knowing the intensity of field required by a new armature for another machine it is only necessary to increase or diminish the cross-section of the magnet cores in the same proportion as the new field is larger or smaller than the one tested.

The length of a magnet core depends only on the amount of wire which is required in its coil to generate the necessary number of lines of force. It is evident that it takes a certain number of ampere turns to develop the required magnetism, and owing to the limited resistance of these coils and to their allowable degree of heating, the amount of wire is also limited. If the coils are very short, the thickness of the coil will be so great that the outside layers may not have their full effect, being too far from the iron; it will also make the outside layers unnecessarily long. On the other hand, if the magnet core is very long, the thickness of the coil will be very small, which by itself is an advantage, but the weight of iron will then be uselessly great, making the machine larger and heavier than is necessary, while the greater magnetic resistance and the greater length of the course of the lines of force will both tend to weaken the magnetic strength and to increase the leakage.

One of the older authorities states that the best relation between the coil and core of a circular magnet is when the core is one-third of the whole external diameter of the magnet, that is, when the thickness or depth of the coil is equal to the diameter of the core. But although this may be the case for telegraph magnets, it is certainly not the case with dynamos, in which the cost of the wire and the resistance of it are of much greater importance than in telegraph magnets. A very good rule, and one which is based on actual experience with machines, as distinguished from theoretical deductions, is to make the thickness or the depth of the coil about one-third of the diameter of the core on round magnets, and one-third of the smaller diameter on oval magnets. If made much greater than this the magnets will be apt to heat too much, or to over-saturate the core, or to have a uselessly large amount of wire on them. If much less than this, it will generally be found that the magnets are larger than would be necessary to answer the purpose. This latter is no serious fault and will not, as in the other case, prevent the magnets from generating at least the desired amount of magnetism, and on the contrary will allow for an increase of magnetism if it should be found necessary; it is, therefore, much safer to make the cores thicker and longer, and consequently the depth of the coil less, than what might at first appear to be necessary. Furthermore, in many forms of frames, the cores can readily be shortened if it should be found necessary, while they cannot always, so conveniently, be lengthened.

If the number of ampere turns required for a magnet were known, it would not be difficult to determine the length of the core, because, its cross-section can be determined as described, from which together with the ampere turns and the allowable thickness of coil, the length is readily calculated. But in most cases the ampere turns are the last thing to be determined, when the machine is otherwise completed, and it, therefore, remains only for the designer to use his judgment regarding the length which the cores should have. Besides the remarks already made concerning the length of cores, the following may be used as general guides. Deprez states that to have the best effect the length of a magnet should not be greater than three times its thickness; this we presume refers to the core and not to the outside dimensions of the whole magnet with coil. A short thick magnet will magnetize and demagnetize more readily, or as Fleming states it, "such a magnet has no magnetic memory;" it responds more quickly to changes of current in its coils. Some makers consider this a disadvantage and purposely over-saturate their magnets in order to "steady" them in their action. The tendency of reliable and systematic dynamo builders has been toward short thick magnets and it may, therefore, be accepted as a safe example to follow.

The following general principles governing the magnetism of coils may also serve as a general guide in designing magnets. In a circular coil of wire composed of a turn or turns of wire, as for instance in a large tangent galvanometer, if the radius in centimeters is r and the ampere-turns are represented by c then the intensity of magnetism at the centre, in lines of force per square centimeter, will be

$$i = \frac{2\pi c}{10r}$$

which may be reduced to

$$i = .6283\frac{c}{r}$$

or if d is the diameter,

$$i = 1.25664\frac{c}{d}$$

Or if R and D are the radius and diameter in inches, and I the intensity in lines of force per square inch, these formulæ become

$$I = 1.5959\frac{c}{R} = 3.1918\frac{c}{D}$$

In these formulæ c will be the current in amperes if there is only one turn in the coil, but if there are many turns c is the current multiplied by the number of turns, that is, the ampere turns. From these formulæ either the intensity, diameter or ampere turns may be calculated.

According to a statement made by Clerk Maxwell, the intensity in all points in the interior of such a ring or coil and in the plane of the ring, is equal. It follows from this that the number of lines of force enclosed in the ring is equal to the intensity multiplied by its area. Hence if M is the total number of lines of force in this coil it will be equal to

$$M = i\,\pi\,r^2 = 1.9739\,c\,r = .98695\,c\,d$$

or, if the dimensions are in inches,

$$M = 5.0137\,c\,R = 2.5069\,c\,D$$

When the coil is oval or any other form of cross-section, it will in most cases be sufficiently accurate to use for the diameter or radius that of a circle whose area is equivalent to the oval.

Many deductions can be made from these formulæ, some of which may serve as guides in constructing magnets. For instance, it will be seen that if the diameter of the

Digitized by Google

coil is doubled, the magnetic intensity, for the same current, will be halved, but as the area is four times as great the total magnetism will be twice as great; the wire being twice as long, the electrical energy required to develop this magnetism will be twice as great if the wire has the same diameter; if the cross-section of the wire is also doubled (or its diameter made 1.4 times as great) the resistance will be the same, and therefore the energy required will be the same, notwithstanding that the magnetism has been doubled. This shows that the amount of magnetism does not depend on the amount of electrical energy or watts in the coils; any amount of magnetism may be developed with even a very small number of watts, if the resistance could be made low enough. The amount of magnetism depends only on the current and the distance through which this current passes, or on what might be termed the ampere feet or ampere yards. With a wire of low enough resistance the distance or length, and therefore the magnetism, may evidently be made very great for even a small number of watts.

These formulæ are correct only for a coil in which the amount of wire is very small. For a long or thick coil they will not be strictly correct, but they may serve as a general guide in calculating larger coils from the effects of smaller ones, or the reverse. In general, they may be relied upon for relative proportions between two magnets.

When iron is introduced into the coil, as in an ordinary electro-magnet, the intensity and total number of lines of force will be increased greatly. The iron acts as if it contained a large amount of magnetism in it, which was rendered active by passing a current of electricity near it. Its action may be pictured as follows: suppose a quantity of steel filings were magnetized very strongly and placed in a round bottle containing thick syrup or any other material which will suspend them but which will not allow them to turn around unless some force is exerted on the particles of steel. Each piece representing an enlarged molecule of iron, being a magnet, will attach itself to others of opposite polarity, thus forming complete little magnetic circuits amongst themselves. If well shaken they will attach themselves as described and will therefore exhibit no definite polarity to a needle placed outside, though they will attract the needle. This represents iron in its normal condition. If a coil be wound around this bottle and a current be passed through it, these little magnets will turn on their axis and arrange themselves perpendicular to the wire of the coil and parallel to the lines of force generated by the current. They will therefore, each add their magnetic intensity to that of the current, as they have arranged themselves in the same direction. They will then exhibit polarity to a needle outside of the bottle, the polarity being the same as that of the coil. The stronger the current the greater will be the force to turn their particles out of their normal position and into that induced by the coil. Their external magnetism will therefore increase with the current until they have all been turned parallel to each other, the increase of magnetism of the particles will then stop. This corresponds to the point of saturation above which the magnetism of the iron itself cannot be increased. When the current is stopped they will again attach themselves to each other forming closed magnetic circuits, and not showing any external magnetism.

(*To be continued.*)

NOTE ON THE PERFORMANCE OF SOME DYNAMOS.

BY D. C. JACKSON.

THE following table was constructed with a view of comparing the results attained by the several prominent dynamo builders, principally English and American. The data were gathered wherever obtainable and reduced to uniformity. In most cases the authority for the original figures is given in the last column. Where this is omitted the results were gathered from measurements made on machines in the physical laboratory of Cornell University.

The importance to designers and those engaged in the study of the performance of dynamos of such a table, is thought to be sufficient apology for its publication.

The first three columns of the table explain themselves. In the column marked velocities, are given periphery velocities in feet per minute.

TYPE OF ARMATURE.	MACHINE.	REVOLUTIONS PER MINUTE.	VELOCITIES	I.	II.	III.	E. M. F.	CURRENT.	AUTHORITY.
Siemens	Edison-Hopkinson.	800	2100	.45	.018	.006	110	300	Kapp & Crompton.
"	Edison.	1750	2850	.312	.0065	.00018	125	40	
"	Weston.	1000	1850	.234	.0077	.00024	150	20	Prof. Anthony.
"	Mather.	2750	3200	.260	.0049	.00010	125	40	
"	Wenström.	460	2225	.114	.0031	.00025	110	190	La Lumière Électrique.
"	2½ inch.	3000	1875	.182	.0060	.00006	70		Prof. Anthony.
Gramme	Manchester (Mather & Platt).	1050	3300	.402	.0075	.00038	110	220	Kapp & Crompton.
"	Crompton.	400	1620	.230	.0085	.00057	600	120	*Electrician*, London.
"	" (Plating).	700	2840	.336	.0070	.00048	110	490	"
"	Crompton.				.0095		110	217	Crompton.
"	"				.0070		110	100	"
"	"				.0055		60	33	"
"	Elwell-Parker.				.0080		110	460	"
"	" (4 pole).				.0065				Kapp.
"	" (2 pole).				.0045				"
"	Kapp.				.0070		110	125	Kapp & Crompton.
"	Sperry.	760	3150	.226	.0043	.00080	850	23	
"	Goolder & Trotter.	765	2140	.133	.0038	.00017	56	285	*Electricium*, London.
"	"				.0055		60	200	Kapp & Crompton.
"	Old Gramme.	1000	2875	.109	.0023	.00011	200	25	Prof. Anthony.
"	Raffard-Breguet.	1400	2750	.117	.0022	.00008	110	85	Crompton.
"	Ball ("Unipolar").	1380	3800	.133	.0016	.00010	470	8	ELECTRICIAN AND ELECTRICAL ENGINEER, N. Y.
"	"	1180		.113		.00010	710	8.2	"
"	Deprez (Paris-Creil).	216	1475	.081	.0033	.00037	3000	9.9	Levy & Kapp.
Pacinotti	Phœnix.			.290	.0058	.0006	110	380	Kapp & Crompton.
Brush	Brush.	850	4670	.200	.0026	.00024	3000	9.5	
Thomson-Houston.					.0019				Kapp.

The columns marked I, II, and III, contain respectively the E. M. F. in volts generated by the machines per foot of armature wire, volts per foot of wire and per unit periphery velocity (1 ft. per sec.), and volts per foot of wire and per one revolution per minute.

The dynamo with Siemens armature called "2½ inch" is a little machine with armature about 2½ inches in diameter and six inches long. It is one of two such machines built by Prof. Anthony for experimental purposes. The excellent performance of so small a machine is explained by the excellence of its construction. Its field magnets are solid forgings of Swedish wrought

Digitized by Google

iron and the armature core consists of thin insulated plates of soft iron.

The "old Gramme" dynamo was built in the laboratory in 1874, by Prof. Anthony, immediately on learning of Gramme's success. It has been in constant use ever since for experimental purposes in the laboratory. Its field magnets have wrought iron limbs and cast iron pole pieces and end yokes. A comparison of its performance with that of the Raffard-Breguet, one of the latest French dynamos, is instructive.

The machine of Deprez given in the table is the generator in the final Paris-Creil experiments.

CORNELL UNIVERSITY,
February 19, 1887.

ABSTRACTS AND EXTRACTS.

THE TELEPHONE SERVICE CABLE SYSTEM AT COPENHAGEN, DENMARK.

THROUGH the kindness of Mr. F. R. Welles, of Antwerp, we are enabled to publish the following information in respect to the introduction of cables for telephone service, from a recent letter of Mr. C. L. Madsen, of Copenhagen, placed at our disposal by Mr. Welles.

"The cable system in the telephone establishment in Copenhagen, was opened for service in the month of November, 1885.

The underground cables extend in a continuous line from the middle of the city to a point on the western boundary, from which they spread in southerly and northerly directions. By means of the underground cables and adjoining aerial cables and pole lines all the central offices in Copenhagen, exchanges, at present six in number, the central office for the public stations, at present 24, and several other important points are provided with a large number of permanent trunk wires, and in this manner, put in direct communication with each other; thus, never more than two central offices are required for connecting up any two subscribers.

Between the two large central offices in the town (I. and II.) and including the Royal central station, eight cables are laid. From the western central bureau (II.) to the junction named above, three cables are laid, and from this point the cables are spread as described.

The total length of all the cables amounts at present to 28 kilometers, out of which 19.5 kilometers belong to the underground system, 7.3 to aerial cables and the remainder, 1.2 kilometers, to submarine cables, crossing the harbor. The total length of all the cable wires is about 800 kilometers, and the total length of all the wires in the entire system amounts at present to more than 3000 kilometers. The telephone establishment in Copenhagen serves at present about 1500 subscribers.

All the underground and aerial cables named above belong to the class of anti-induction cables, which are delivered by Messrs. Felten and Guilleaume from their works, "Carlswerk" at Mulheim on the Rhine; the cables were designed by that firm in conjunction with myself expressly for the purpose of working all the conductors on the single wire principle. The work done is, in fact, the realization of the views and plans laid down in a treatise on "Telephone Establishments in Large Cities," which I published early in 1885. From the following you will see how perfect this extensive cable system has worked ever since it was laid.

In respect to details of construction of the cables the following points may be of special interest.

1. *Underground cables.* Of these two types of cable are used. (*a*), In short lengths for distances up to three kilometers the cable is composed of 27 copper conductors, each 0.8 mm. diameter, insulated according to Messrs. Felten and Guilleaume's patent to 2.1 mm. diameter; (*b*), in long lengths for distances up to six kilometers, the cable consists of 27 copper conductors, each 1.0 mm. diameter, insulated as above to 3.0 mm. diameter.

In both of the above types all the cores are covered with a layer of tinfoil; three naked copper wires are placed in the middle of the cable to serve for the earth connection. The whole of the cable is laid up as usual, served with an insulating ribbon and thereafter with a double cover of lead, laid on under hydraulic pressure. The cable is finally protected outside with an asphalted tape.

On an average the copper resistance of the above cables is found to be respectively 35.6 and 19.2 ohms per kilometer, the insulation about 500 to 1500 megohms per kilometer and the inductive capacity about 0.19 to 0.13 microfarads per kilometer.

2. *Aerial cables.* These cables are constructed on the same principle as the underground cables only that the cable contains 26 copper wires 0.8 mm. insulated to 1.8 mm. The cable is provided with a carrying strand consisting of 19 steel wires 0.8 mm., which at the same time serves for the earth connection. The outer protection is made fire proof and painted white.

3. *Submarine cables* are made of 30 G. P. wires laid up in the usual manner and protected with the required armor of heavy iron wires, covered with an outer compound.

After having been laid the whole cable system has been continually tested with the result that all the conductors up to date have been found in perfect electrical condition and in perfect working order. For the purpose of testing the cables and other conductors in the telephone system, a very complete testing room has been erected at the central station "Royal," in which all the wires from the 16 cables (eight to each of the two central offices I. and II.), are joined up in testing boxes, provided with binding screws and affording free and easy access to each wire.

The telephone system of Copenhagen reaches as far north as to Elsinore at the Sound, about 60 kilometers; southwards to Kjóge, about 40 kilometers; and westwards to Roskilde, about 35 kilometers. The greatest distance over which speaking is carried on is, therefore, about 100 kilometers, Elsinore—Kjóge. In this circuit is employed a total length of about eight kilometers of cable wire. Other circuits comprise up to about 70 kilometers of wire, including about 10 kilometers cable wire.

In connection with the cable system several contrivances have been employed. Of such I may name, that the earth wires in the underground cables are connected with the earth at different intermediate points along the route; this arrangement is made in order to accelerate the discharge of the cables, but the effect of this device has still to be more accurately ascertained. Another and most effective arrangement is the shunting of all the annunciator coils; by experiments the best resistance of the shunt coils was found to be four to five times that of the annunciator coils, or about 600 ohms against 120. At this ratio the drops work well, and at the same time the influence of the shunts on the talking was very remarkable, so that the speaking through the described circuits could be carried on with perfect ease.

The cable system has improved in a remarkable degree the permanency and stability of all the conductors and communications; the interruptions and derangements, frequently caused by storms and accidents, have considerably decreased in number and import since the long trunk lines have been placed underground. There is no doubt that in this respect cables would afford many advantages when laid in intermediate places, where long spans or want of free line and proper supports threaten the continuity of important parts of the circuits."

THE VERIFICATION OF FARADAY'S LAW OF ELECTROLYSIS WITH REFERENCE TO SILVER AND COPPER.[1]

BY W. N. SHAW, M. A.

SINCE the time of Faraday his law of electrolysis has not been

1. Paper contributed to the British Association Meeting, 1886.

Digitized by Google

subjected to any very extensive experimental investigations. A summary of the results obtained is given in the article on electrolysis in the "Encyclopædia Britannica." The most accurate verification appears to have been conducted by Soret, who attributes to the law an accuracy of 0.2 per cent. for copper and silver. Buff used different currents, and found the law verified by experiment to about one per cent., but the general impression has been that the law was only true to a somewhat rough approximation.

A practical acquaintance with the behavior of an electrolytic cell of copper sulphate shows that it is not *necessary* to attribute the defect from the theoretical value of the chemical equivalent obtained in that way to the failure of Faraday's law. In depositing copper upon a copper plate it may often be observed that small but brilliant red crystals are formed on the deposit. These crystals under the microscope are very beautiful; they may probably be regarded as a suboxide of copper formed by the action of the copper on the solution. A purple coloration is, moreover, often formed on the cathode, and this is possibly due to the presence of the same compound of copper. This secondary action produces, of course, a difference in the weight of the deposit formed, and the true amount of electricity which has passed cannot be inferred either from the weight of the copper with the compound or from the weight of copper remaining when the crystals have been removed.

Further, it is well known that a copper plate when immersed in a solution of copper sulphate without any current gives rise to some chemical action which causes the copper plate to alter in weight. The alteration may be either in the direction of increase or of decrease of the weight, the effect depending upon the state of the plate and the state of the solution.

In considering the increase in weight of a copper cathode in an electrolytic cell we cannot without definite experimental reasons neglect to consider the possibility of both these actions occurring together, and, moreover, the passage of the current may produce complicated results which cannot be inferred from the action of the solution in the cell under other conditions. Dr. Gore has made very numerous experiments upon this subject, without, however, arriving at any very satisfactory result.

In view of the importance of the subject, a very large number of experiments have been made at the Cavendish laboratory at Cambridge under my direction during the past two years. They may be divided into two groups: (A), experiments to ascertain whether two copper cells give the same amount of deposit for the same current; and (B), experiments to determine whether a copper cell can be arranged so that, on comparison with a silver cell, within sufficiently wide limits of current it will give a value of the chemical equivalent of copper agreeing with that obtained by chemical methods.

A.—EXPERIMENTS ON COPPER CELLS ONLY.

These experiments consisted in arranging pairs of copper cells with various electrodes, as copper plates, copper wire, copper cylinders having wire connections, platinum wires, in order to ascertain whether the disturbing actions were limited to the surface. The results were very irregular and disappointing. Errors amounting frequently to more than one per cent. occurred without any assignable cause.

The same is all that can be said about experiments with different solutions of sulphate, including solutions from which air had been expelled by boiling, the experiments being then conducted under the receiver of an air pump. Endeavors to allow for the differences for the cathode weighings by supplementary experiments on the effect of the solution upon plates not connected with the electrodes have likewise proved fruitless. The enumeration of these experiments would serve no practical purpose, as they lead to no generalization; I shall, therefore, pass over them.

B.—EXPERIMENTS ON THE COMPARISON OF SILVER AND COPPER CELLS.

One of the most disagreeable features of the experiments referred to in the preceding section was that when two cells were compared, and a difference in the increase of weight of the cathodes was obtained, it was impossible to say whether either or both of the two cells was at fault, and it was therefore decided to employ a silver cell as a standard. Lord Rayleigh was at the time engaged on his experiments upon absolute value of the electro-chemical equivalent of silver, and had not yet arrived at a result. Experiments were therefore made to obtain a silver cell that might be fairly regarded as a standard. The only difficulty in the way was that the deposit of silver from pure nitrate is crystalline and very rough. The deposit was taken upon a platinum crucible, and it was feared that error might arise, either from mechanical loss of the silver during the operation of drying, or from the retention by the deposit of water, or salt in solution. Attempts were therefore made to use as electrolyte (1), a solution of chloride of silver in hypo-sulphite of silver (2), a solution of nitrate of silver containing glycerine (3), a solution of nitrate of silver containing acetate of silver. The deposits obtained with all these are much closer and harder, but the hyposulphite solution is very unstable, and a current beyond a certain density precipitates a black sulphide which destroys the experiment. The other solutions were also discarded after consultation with Lord Rayleigh, who had then shown that a 15 per cent. solution of pure nitrate gave a perfectly satisfactory silver cell if proper precautions were taken with the drying, whereas the solutions containing organic salts were liable to serious error, probably in consequence of the inclusion of the solution in the pores of the deposit.

It was originally intended to use only those experiments from which the loss of the anode was obtained equal to the gain of the cathode. It was found, however, that the possibility of weighing the loss of the anode was simply fortuitous, the action of the solution upon the silver always producing a sort of honeycomb formation, and ultimately leaving smaller particles which fell off in washing. This was the case even when a silver crucible was used as the anode. It was therefore decided to use the gain of the cathode only. The form of silver cell adopted is that of Poggendorff's voltameter, in which a platinum crucible standing on a copper plate is the cathode and a silver rod the anode. The crucibles were about 1½ inches in diameter and two inches high, and the silver rod forming the anode was about half an inch in diameter.

The method of drying the deposit was to wash in distilled water by filling up the crucible several times, and allowing it to stand for some time, then, after thoroughly rinsing, to wash it out with alcohol and dry in a hot air bath at about 260° C.

As the crucibles were very different in size from those used by Lord Rayleigh some experiments were made to determine their behavior.

The results are shown in comparisons (A), (B), (C), (D), given below.

Comparison (A) *of two crucibles of different sizes.*

Date.	Time in minutes.	Current in amperes.	Large crucible grammes.	Small crucible grammes.	Difference.
Feb. 6	100	.3096	2.0789	2.0802	-.0013
" 7	120	.3638	2.9312	2.9364	-.0032

Comparison (B) *of an old and new crucible.*

			Old crucible.	New crucible.	
Feb. 11	120	.4677	2.5203	2.5183	.0020

Comparison (C) *of cell with acetate, with one without.*

Date.	Time in minutes.	Current in amperes.	Crucible with no acetate.	Crucible with acetate.	Difference.
Feb. 13	123	.3084	2.5391	2.5467	+.0076
" 14	120	.3521	2.8251	2.8368	+.0117
" 16	125	.4047	3.3850	3.4016	+.0166
					The crucibles were made red-hot and re-weighed
" 18			3.3850	3.3966	+.0116
" 18	120	.3416	3.0610	3.0777	+.0167
					Heated and re-weighed
" 19			3.0609	3.0685	+.0076
" 19	120	.2794	2.2429	2.2512	+.0103
" 22	120	.4510	3.2261	3.2473	+.0212
					Heated and re-weighed
" 23			3.2258	3.2431	+.0173
" 23			2.9057	3.0114	+.1183

Comparison (D) *of pure nitrate cell with chlorate cell.*

Date.			Chlorate cell.	Nitrate cell.	Difference.
May 14			2.0904	2.0895	.0009
			(heated to redness and re-weighed).		
" 15			2.0902	2.0891	.0011
June 5	120 min.	.3093	2.2270	2.2271	.0001
" 7	130	.2852	2.4901	2.4900	.0001

The chlorate deposit after being heated to redness was dissolved in pure nitric acid and the solution tested for chloride, but none was found.

The silver cell being thus shown to be capable of working quite satisfactorily, the arrangement and comparison of copper cells were proceeded with. It was found in the previous experiments on copper that the deposits obtained on platinum wires gave much more concordant results than any other form of cell. This form of cell had been already used by Soret. It was accordingly decided to adopt that form. The cathodes were platinum wires about 15cm. long and 1mm. in diameter, and the anodes were wires of electrolytic copper whose diameter was somewhat greater. It is, however, well known that the density of the solution alters very considerably in the neighborhood of the cathode, and if the electrodes are vertical this effect is not so much interfered with by convection currents as when the electrodes are horizontal. The wires were therefore placed horizontally in the solution; for this purpose they were bent at right angles, and the one end fastened to a binding screw attached to a thick wooden rod that lay on the edges of a porcelain dish that contained the electrolyte. A number of cells were prepared respectively for 1, 2, 3. .....up to 16 wires. The wires were arranged about two inches apart, and between them lay the anode wires attached to a similar piece of

Digitized by Google

wood that rested on the other end of the dish; the wires in the same cell were put in multiple arc by a strip of copper laid along the wood, through which the binding screws passed. Some difficulty was met with in arranging that the anodes and cathodes did not touch, but with care it was surmounted. The solution was an approximately saturated solution of Hopkin and Williams' pure copper sulphate. No acid was added. The wires with their deposits were washed by rinsing them in several changes of distilled water and then dipped in alcohol and dried in an air bath at a temperature of about 100° C.

In the experiments given below the copper deposits were brilliantly clean and generally showed no trace of oxidation on drying. The reason for this was never made clear; it is, however, easily recognized that under certain circumstances, defined perhaps by current density or the state of the solution, the copper deposits do not easily oxidize on drying, whereas in other experiments it seems almost impossible to dry them without considerable oxidation.

TABLE I.—*Comparison of amounts of silver and copper deposits.*

Date.	Time in min.	No. of wires.	Cu. deposit.	Ag. deposit.	Ratio.	Current in amperes.
June 10	145	1	.7309	2.4848	3.400	.2553
" 11	120	2	.9268	3.1445	3.393	.3903
" 11	120	3	.7651	2.5967	3.394	.3222
" 12	115	4	1.0384	3.5130	3.383	.4549
July 7	120	2	.8417	2.8571	3.394	.3546
" 7	120	1	.9245	3.1401	3.397	.3897
" 8	120	3	.9764	3.3186	3.399	.3954
" 8	—	4	.9740	3.3137	3.402	—
" 8	120	5	.4206	1.4332	3.408	.1778
" 9	120	6	.9969	3.3872	3.398	.4203
" 9	—	7	.9482	3.2297	3.406	—
" 10	120	8	.9471	3.2268	3.407	.4004
" 10	120	9	1.1369	3.8721	3.406	.4806
" 11	123	10	1.1261	3.8383	3.408	.4648
" 11	123	11	1.0792	3.6783	3.408	.4454
" 14	125	12	1.0416	3.5610	3.419	.4248
" 14	128	1	.7318	2.4876	3.399	.2895
" 17	125	2	.7577	2.5770	3.401	.3071

Mean 3.4010

In all the experiments a rough tangent galvanometer was included in the circuit, so that any considerable variations of the current might be detected. A water or dilute copper sulphate cell, with copper electrodes whose distance apart could be adjusted, was also included to serve the purpose of a rheostat.

In a first series of experiments a silver cell was compared with each one of the copper wire cells in turn; the results are given in the table i.

TABLE II.—*I. At the Cavendish Laboratory.*

—			Ratio of weight of silver to weight of copper.					—	
Date.	Time in min.	Weight of silver in grmms.	For 1 wire.	For 2 wires	For 4 wires	For 8 wires	For16 wries	Current in amps	Remarks.
Oct. 10	130	.9717	3.407	3.414	3.417	3.416	3.419	.1113	Galvanometer deflection variable. In the 4-wire cell 3 wires only received deposits.
" 20	300	2.7019	3.401	3.408	3.409	3.420	3.447	.1341	Galvanometer deflection variable. In the 4-wire cell 3 wires only received deposits.
" 26	170	3.3682	3.393	3.398	3.397	3.401	3.407	.2951	Galvanometer deflection variable. "One wire" slightly discolored.
" 29	120	2.8930	3.397	3.398	3.400	—	3.414	.3591	—
II. At Emmanuel College.									
Nov. 27	120	3.9089	3.401	3.404	3.405	—	—	.5229	—
Dec. 10	110*	3.0259	3.413	—	—	3.411	3.408	.4093	Copper left in hot chamber too long, and was discolored.
" 15	120	4.9954	3.397	3.399		3.402	3.408	.6202	—
" 16	130	4.0393	3.398	3.401	3.400	3.403	3.398	.4629	—
" 17	120	4.0895	deposit loose.	3.398	3.400 3.398	3.403	3.406	.5076	—
" 18	120	5.1570	—	3.400	3.399	contact.	3.400	.6399	A copper crucible in the same circuit gave 3.407.

* Discarded.

It will be seen that the extreme error of the values from the mean amounts to rather less than one-half per cent.; the errors are irregular, but the difficulty of keeping the current constant was very great, and in some cases there was considerable difference, so that no inferences as to the effect of current density could be drawn. The arrangement was therefore altered, and five copper cells containing respectively 1, 2, 4, 8, and 16 wires, were all included in the same circuit with one silver cell. The electromotive force was obtained from 12 storage cells, or from Grove's cells. The observations are included in the first part of table ii. There was still some difficulty in keeping the current constant, and the apparatus was in consequence transferred to Emmanuel College, where a dynamo working at 110 volts for electric lighting was available; a satisfactory series of observations was obtained, shown in the latter part of table ii.

DISCUSSION OF THE OBSERVATIONS.

The numbers quoted in the table give the ratios of the amounts of silver to the corresponding amounts of copper deposited to the 4th significant figure. The balance used was a triangular beam Oertling, which could be relied upon for an accuracy reaching 0.1 mgm. The copper deposits generally amounted to about one gramme, and the accuracy of the weighings (corrected when necessary for the differences in the buoyancy of the air at the times of the initial and final determination of the weights) may be assigned as .01 per cent. for copper deposits, and .003 per cent. for silver. The numbers in the table are carried to one place less than the weighings permit. This is done intentionally in order to enable the reader to obtain a better general idea of the whole series of observations. It is easily seen that the differences in the table are real differences, and correspond to some real characteristic of the electrolytic action in the cells. A glance at the sets of observations belonging to the same experiment is sufficient to suggest a diminution of the amount of copper deposited as the current density diminishes. The area of each wire was about five square centimeters, so that the current density varies for the observations in table ii. between .001 and .15 ampere per square centimeter, and practically includes all current densities that can come under observation with this form of cell. In some cases the density was so great in the "one wire cell" that the copper deposit was flocculent, and could not be weighed in consequence; and in some of the 16 wires the deposit was not sufficient to cover the wires, but occurred in patches with small groups of copper masses.

If we proceed, on the assumption of the accuracy of Faraday's law, to attempt to explain the observed differences, we must first look to the action of the solution upon the deposit, since it is known that such an action actually takes place when copper is immersed in a solution of sulphate, and that the weight of copper might be reduced by solution. This action is said to depend upon the solution and the temperature. These considerations make it difficult to infer the action in the cell from that upon a wire without a current flowing: for, in the first place, the solution is weakened in the immediate neighborhood of the cathode by the electrolysis; and, in the second place, the temperature is altered by the current itself, and was sensibly different in the different cells in some of the experiments; but to measure the temperature and allow for it is not very practicable, as it is not uniform throughout the cell.

Further, there may possibly be a division of the current between the salt and the solvent, and any action of the kind would probably have an effect upon the action of the solution on the cathode.

The only plan that has suggested itself to me is to arrange the observations in the order of current density, and to see if any correction could be applied that would make the observations fairly comparable. This may fairly be applied, since the disturbing causes I have mentioned depend upon the current density.

In order to put this to the test, I have assumed in the first place that the action upon the deposit may be represented by an expression of the same form as would be required to represent the action of the solvent upon a wire immersed in the solution without any current. This we may take to be (for the comparatively short times of the experiments) a case of solution going in at a constant rate, and proportional to the area exposed. Thus, if δ be the actual loss of copper in an experiment when the area exposed is A, and the time t, we shall take

$$\delta = kAt,$$

and shall investigate whether a constant value of k can be taken to bring the observations into agreement. It is easily seen that this is equivalent to $\frac{\delta}{c} = \frac{k'}{d}$ where c is the total amount of copper deposited during the experiment, and δ the current density; and where k' is also constant, but numerically different from k. In words we may express this by saying that the fractional correction is inversely proportional to the current density.

Digitized by Google

LAW OF VARIATION OF THE DEPOSIT WITH CURRENT DENSITY.

It is difficult to settle what value to assume for k'. If k' be a true constant, its value can of course be calculated from any pair of observed results; but the magnitude of possible experimental errors, in comparison with that of the quantity under consideration, makes it highly improbable that the results would be at all concordant. It will at any rate be well, in order to avoid a possible error in the weighing of the silver, to use observations belonging to the same experiment for determining the value of k'. I have determined the values of k' for several pairs of observations, taken somewhat at random, with the following results (table iii.):—

TABLE III.

Experiment.	Range of current density.	k'
Oct. 10	.0014 — .023	.0000052
" 20	.0017 — .026	.000025
" 26	.0037 — .015	.000014
" 29	.0045 — .036	.000024
Dec. 15	.0077 — .031	.000025
" 16	.0115 — .092	.000017
" 17	.0063 — .051	.000017

The values of k' thus obtained are not very concordant. It must, however, be remembered that it is difficult to assign with confidence a numerical value to the current density, since the effective area of the copper surface may be practically very different from that of the platinum on which the copper is deposited. In the expectation that the action of the solution upon the copper when no current is flowing might help to decide which value of k' to take, the "one wire" and "16 wires" of October 20th were replaced in the solution, after the weighing was completed, and remained there for the time of duration of the experiment, viz., five hours. The "one wire" lost .0008 gm., and the "16 wires," .0110 gm. This gives a loss of .0007 gm. per wire, and corresponds to a value of $k' = .000025$. On November 27th, a loose copper wire was left in each of the cells during the experiment; and the mean loss of each of the wires during the time was .0003 gm., which corresponds to approximately the same value. It will therefore be well to see what effect the correction of the weighings on the hypothesis that $k' = .000025$ would have upon the tabulated results. The correction may be introduced by adding .00014 gm. to the weight of each wire immersed for each hour during which the experiment lasts. The following table shows the weights of copper as thus corrected (table iv.):—

TABLE IV.

Date.	1 wire.	2 wires.	4 wires.	8 wires.	16 wires.	Mean.	Mean per centage.
Oct. 10	.2855	.2853	.2853	.2869	.2889	.2864	0.4
" 20	.7952	.7942	.7941	.7957	.7949	.7948	0.06
" 26	.9932	.9922	.9931	.9934	.9950	.9934	0.06
" 29	.8519	.8516	.8520	—	.8518	.8518	0.02
Nov. 27	1.1498	1.1490	1.1489	—	—	1.1492	0.04
Dec. 15	1.4708	1.4700	1.4703	1.4704	1.4698	1.4703	0.02
" 16	1.1888	1.1882	1.1892	1.1894	1.1932	1.1898	0.11
" 17	—	1.2049	1.2043	1.2037	1.2048	1.2042	0.03
" 18	—	1.5172	1.5183	—	1.5215	1.5190	0.11

An examination of this table shows that, with some few exceptions, the results, as corrected, are very fairly concordant. That no value of k' could be found which would apply equally to all the observations is obvious from the discordance in the values of a k' tabulated above. A striking feature of the table is that the numbers under the heading of "2 wires" seem now to be the minimum values of the table; the "1 wire" values are all greater; and the numbers in the other columns are very rarely less, and then only by very small quantities. This shows that the correction applied is probably too large, though it is sometimes very successful. It is probable that the correction ought not to be applied when the current density is very great, as the difference between the "1 wire" and "2 wires" is increased by the correction, though not entirely due to it. This, as already pointed out, is probably *à priori*, since the more rapid deposition of copper would weaken the solution in the immediate neighborhood of the cathode. The correction may, however, be fairly adopted for the smaller current densities. It appears on examination of the current densities that the exceptional cases do not arise when the current density is below .02 ampere per square centimeter, so that the weights of copper deposited with currents of density less than .02 ampere per square centimeter, may be corrected by multiplication by a factor $1 + \frac{k'}{d}$, where d is the current density, and k' a constant not differing much from .00002.[1]

1. The values obtained by Lord Rayleigh with copper bowls (*Phil. Tr.* Pt. I. 1884, p. 458) are :—
Current density, about .012 ; ratio of equivalent, 3.405
" " " .026 ; " " 3.408
" " 3.404

CHEMICAL EQUIVALENT OF COPPER.

We have now to compare the results obtained for the ratio of the chemical equivalent of silver to that of copper with those obtained by purely chemical methods, in order to ascertain whether or not Faraday's law is strictly applicable in the case of silver and copper. If we take the results given in Landolt and Börnstein's "Physikalisch-Chemische Tabellen," we find the atomic weight of silver given as 107.66 by Meyer, and 107.675 by Clarke, and the accuracy is stated as being within .05; that of copper is quoted as 63.18 from Meyer, and 63.17 from Clarke, with a possible error of ± .5. This would give a value for the ratio of the chemical equivalents of silver and copper equal to 3.4086; or, allowing the fullest margin for error, the value lies between 3.38 and 3.44; so that the values obtained by the deposition of silver and copper seem to be all within the limits of error thus assigned; and we cannot, therefore, test the accuracy of Faraday's law until the value of the chemical equivalent of copper can be assigned with greater accuracy than appears at present to be practicable. We may, however, notice that the value 3.4086 is that which would be obtained with comparatively very small current densities, and occupies a place in the middle of a continuous series, and there seems to be no reason in the electrolytic behavior of the cells for accepting that value as indicating a limiting result. We may therefore fairly approach the question the other way, and, using the observations to calculate the chemical equivalent of copper by Faraday's law, consider the results which follow. If we assume, as we seem fairly entitled to do, that the differences of the weights for different current densities are due to the solution of the deposited copper, it follows (assuming Faraday's law) that we must get a nearer approximation to the true amount of copper equivalent to the amount of silver deposited the greater the current density. The value would be affected by the correction discussed above; but it has been already stated that it is unsafe to apply the correction, or, at any rate, to assign to the value that of k' assigned above. But the consideration of that correction serves us to this extent, viz., to show that for current densities above .02 its value must be very small indeed, reaching, as a matter of fact, with the value of $k' = .00002$, to less than one milligramme per gramme. But in determining by Faraday's law as accurately as possible the chemical equivalent of copper from that of silver, the correction cannot be disregarded without sufficient reasons. Some reasons for that course have been given, but in order to test further whether or not the correction should be applied I have plotted the observations on sectional paper, taking as ordinates the ratios of copper to silver, and as abscissæ the reciprocals of current densities. If the correction should be applied throughout, the grouping of the observations should show a straight line inclined to the axis of current densities. I have adopted this method of combining the observations belonging to different experiments for this purpose, in preference to the arithmetical one of taking means, because the latter is liable to be seriously affected by a set of observations, each one of which is far from the mean in the same direction, but which does not extend throughout the whole range. In the estimation by eye of a mean result of plotted observations allowance can be made for the effect such observations produce, whereas they may give a false appearance of general law to a set of arithmetical means.

TABLE V.

Current densities.	Ratios observed.	Ratios with the correction ($k' = .000012$)
.124	3.3968	3.3965
.104	3.4005	3.4001
.094	3.3984	3.3979
.072	3.3971	3.3965
.064	3.4004	3.3997
.062	3.3994	3.3987
.052	3.4035	3.4027
.051	3.3982	3.3974
.046	3.4009	3.4000
.036	3.3984	3.3972
.032	3.3990	3.3977
.031	3.3998	3.3984
.027	3.4014	3.3998
.026	3.4056	2.4040
.025	3.3982	3.3966
Mean	3.39983	3.39888
Mean error	.00175	.00151

The observations included in the table ii. when plotted do not give any indication of the divergence of the mean ordinates from a straight line parallel to the axis of reciprocals of current densities until the current density is less than .02, and the straight line passing through the "centre of gravity" of the group of observations for highest current densities, and inclined to the axis with the angle given by the value $k' = 000025$, would leave all the rest of the observations except three on one side of it; but a very

Digitized by Google

fair result is obtained if the value of k' be somewhat reduced, and the line be drawn at the corresponding less inclination through the point corresponding to the "centre of gravity" of observations about the current density .02. If we must take a straight line inclined to the axis as representing the results, the one which must be selected has an inclination to the axis of about one-half that given by $k' = .000025$, and even that leaves on one side of it nearly the whole group of observations whose current densities have reciprocals between 50 and 30. Further, the values of the ratios obtained from the observations for current densities above .02 are remarkably close, except in two instances; in one the ratio is very high, with a high current density, and differs widely from other observations at about the same current density; the other is very low, and belongs to an experiment which gives a series of very low values; this has been rejected because the wire which gave it was marked in the note-book as discolored, *i. e.* oxidized, at the time of weighing.

In order, therefore, to obtain the value of the chemical equivalent by this method, I have taken all the values obtained for current densities greater than .025 ampere per square centimeter. They are included in table v.

I have included in the same table the values obtained when the correction for the current density ($k' = .000012$) is introduced, in order that an opinion may be formed as to the magnitude of the difference produced. It will be seen that the amount of difference corresponds to an error in weighing of only 0.3 milligramme per gramme. I have given reasons for preferring the value as calculated without the introduction of this correction, and from the circumstance already pointed out, viz., that after the correction $k' = .000025$ is introduced, the "2 wire" values are minima, it would seem likely that the deposit obtained with the highest current density may be too great in consequence of the operation of some action which is not accounted for. To decide this point requires measurements to a degree of accuracy beyond that reached in the present observations, so that we may set down the ratio of the chemical equivalent of silver to that of copper, as obtained by this method, as being

3.39983,

with a mean error of $\pm$ .00175 in the observations.

THE ATOMIC WEIGHT OF COPPER.

It will be at once noticed that the value obtained for the ratio of the equivalent differs by only 17 parts in 300000 from the number 3.4000, and there is some indication that the observed value is too small; we may therefore accept the observations as showing the ratio to approach very nearly indeed to 3.4000. This gives for the ratio of the atomic weight of silver to that of copper the ratio of the whole numbers 17 : 10. If we take the atomic weight of silver as 107.66, the atomic weight of copper will be 63.333. This result gives some striking relations; it gives, in fact, for the atomic weight of silver the number $\frac{19 \times 17}{3}$, and for that of copper $\frac{19 \times 10}{3}$, and therefore gives both as one-third of whole numbers. The atomic weight of silver is one of the most accurately determined of all, and the number here assigned to copper is within the limits of error allowed by L. Meyer; so that these remarkable relations may perhaps offer some reason for considering the value of the atomic weight of copper as deduced from Faraday's law as being worthy of consideration.

A number of speculations are suggested by the relations between the numbers thus arrived at; but it is not necessary to discuss them here.

CORRESPONDENCE.

NEW YORK AND VICINITY.

The Sleet Storms of the Season.—No Prospect of Subways Just Yet.—The Richmond Hotel Fire.—The Sad Death of Robert S. Boyd.—Electric Train Lighting.—Telegraph Operators to Enter Into Competitive Telegraphy.—Arc Lights as a Protection Against Burglars.—The Orange Electric Railway.

THE various companies owning overhead wires may congratulate themselves that they have escaped serious damage from sleet and snow storms in New York city during the past winter. On two occasions just as the ice had approached that point in weight which brings down wires, fixtures and poles, in the relative order of their weakness, the weather has changed and a considerable loss avoided, which will not come amiss in placing the wires underground, provided the various subterranean litigants will permit any work to be done during the present season.

Two important tenants, whose rentals would be appreciated—the Western Union and Baltimore and Ohio Telegraph companies—are stringing aerial cables to a considerable extent.

The burning of the new Richmond Hotel, at Buffalo, on the morning of March 18th, was an event which attracted the attention of the public to the dangers of overhead wires, by reason of the difficulty experienced in raising ladders to rescue the guests before they were burned to death. The thorough manner in which the inmates were aroused by the guest call and fire alarm, should not be lost sight of. Had this important feature of a first-class hotel been omitted, doubtless the number of victims, 15 in all, would have been largely increased.

Among those who lost their lives was Mr. Robert S. Boyd, a special agent of the American Bell Telephone Company, who went from Syracuse to Buffalo the previous day, and who was assigned to room 175, according to the hotel register, taken from the ruins 7 days later. Mr. Boyd had made a large circle of friends among the telephone fraternity, and the sad confirmation of the first rumor that he was among the dead, has brought to them a realizing sense of the shocking character of such accidents, which appear to have been more prevalent than usual during the past few months.

The various railway disasters in which the demolished cars have taken fire from overturned stoves or lamps, have directed attention to the heating of coaches by steam and lighting them by electricity. So far as the lighting is concerned, electricity has been used to a limited extent for that purpose on the Pennsylvania railroad for perhaps two years. Special attention has been, of course, directed to the economy of the system as compared with oil or gas. It is to be hoped that at some period, in the dim future, due attention will be given to the question of safety of life as well as economical operating expenses.

It was once the supposition that a telegraph operator if he continued to practice his profession, must remain an employe for the period of his active life. the ownership of a revenue earning telegraph line being out of his reach. This is all to be changed, and the modern telegrapher, if he can secure a good partner at some distant commercial centre, may, like the cobbler or the barber, aspire to the proprietorship of an establishment adorned with his own shingle. All this is to be brought about by the leased line system operated by the Delany Multiplex Telegraph. During the next three months a 20 wire line will be constructed between New York and Boston, each of these wires being subdivided into, say, a dozen circuits. These circuit privileges will be leased at a rental within the reach of the poor laboring man, who, if he is popular in any of the great mercantile centres, such as the dry goods, leather, oil or stock markets, may secure a select class of customers who wish to encourage competition. In this event we may look for a most curious revolution in existing tariff systems, in which rival establishments will give 25 per cent. off the list, and 5 per cent. more for spot cash. When this has brought the business down to hardpan, syndicates and pools will follow, and embrye Jay Goulds will be developed fresh from the ranks. All of this depends merely upon the practical success of Mr. Delany's system, and this is believed to be assured by those who are familiar with it and are competent judges of its possibilities.

Mrs. Hicks-Lord, whose residence was recently robbed of valuable silverware, has petitioned the city authorities for permission to maintain an arc lamp in front of her premises, at her own expense, as a protection against marauders in the future. In a suburban city several residents refused to subscribe toward the support of electric street lighting, on the plea that they were not run after 1 o'clock A. M., although the old naphtha lamps were allowed to burn out at that hour. Speaking of recent burglaries, one of the non-subscribing citizens said it was a shame that the electric lights were not run all night. When reminded that they were kept up as long as the old lamps were, he remarked, "I know that, but it *seems* so much darker now than it did before."

The opening of the experimental section of the electrical street railway in Orange, has been delayed by inclement weather, but is expected to be in operation early in April. No arrangements will be made to introduce horses until after the authorities have made up their mind, upon the subject of permitting the introduction of electricity permanently for such service.

NEW YORK. March 25, 1887.

PHILADELPHIA.

Action of City Councils on Electrical Franchises.—Report of D. R. Walker, Chief of City Electrical Departments.—More Electric Light for Philadelphia Streets.—Proposed Rules for Electric Light Installations.

AT a special session of select council recently, there was a sharp discussion over the report of the electrical committee on the ordinance granting permission to the Penn Electric Light Company to lease its conduits for electric purposes and for pneumatic tubes. A member moved to postpone consideration of the subject, saying: "We have just granted them all the privileges they asked and they have done nothing to fulfill their contracts. Now they come before us again and ask for further

Digitized by Google

privileges, which may be worth thousand of dollars." Another member, in defense of the ordinance, said: "This is all nonsense. This company comes to us as all the others have come. The Keystone company has been held back, not by councils, but by the board of highway supervisors, because there are eleven suits for infringement of patents pending against it. The company has never reached councils. The Penn company has partially established its system, and desires to extend it further. Now, if they have more room than they want, and wish to rent it, what business of ours is it? Why should they not rent their conduits? Must there be a dozen others laid?"

Mr. Monroe characterized the ordinance as a stock-jobbing operation, and urged that it be laid over for the new councils to consider.

The vote on the ordinance as finally taken was, yeas, 20; nays, 6.

A communication was read from the Keystone Electric Light and Power Company protesting against the passage of the Penn ordinance, as it was claimed its passage would give the latter a monopoly over the streets of the city.

Mr. Abrams claimed that the Keystone company's complaint was founded upon its inability to obtain the privileges that had been conferred upon the Penn company. He stated that the Keystone represented the Standard Oil Company, which had acquired control of all the existing electric light companies in the city.

David R. Walker, chief of the electrical department, has submitted his third annual report to Mayor Smith. After referring to the removal of the fire alarm department to its handsome quarters in the City Hall, it gives a minute account of the beginning of a permanent system of underground works for the municipal electrical service.

It also speaks of the lighting of the highways by electric lights, supplied with their currents by the underground wires, and of the extension and improvement of the municipal service, under the control of the electrical department.

It describes the result of the trial of underground electric light service, for which $2,500 was appropriated, and after giving the exact locality where the trial was made, it gives a detailed account of the entire trial, and shows conclusively its entire success.

Attention is also called to the fact that none of the telegraph, telephone, or electric light companies have made any attempts to place their wires underground or to remove their poles from the streets. They are, however, required to make full returns, and a strict account of this is kept by the chief, and should a change of legislation permit, license charges will be collected.

The report continues:

The total returns made for poles, wires, conduits, attachments to city poles and mileage of wire amount to $23,586.50, of which amount $7,149.50 has been paid into the city treasury, leaving unpaid $16,357, a portion of which is in the hands of the city solicitor for collection. According to the returns made to this department there were, on December 31, 1886, on the highways of this city 5,053 poles, exclusive of those along railroad tracks and city poles, being an increase of 231 poles over 1885. Four thousand four hundred and ninety miles of telegraph and telephone wire, being an increase of 122 miles; 204 miles of electric light wire, being an increase of 47 miles, and 595 miles of city wire, being an increase of 57 miles, making a total of city and all other wires 5,289 miles, being an increase of 226 miles over the previous year. The increase of poles was mainly due to the extension of the electric light service for lighting the public highway. On December 31, 1886, there had been laid underground in the city, 472.6 miles of telegraph, telephone and elec tric light wire, of which the city owns 21.6 miles.

The chief recommends that as the lighting of the thoroughfares has reached its present state the city should establish its own plants for electric lighting. As the municipality owns the gas and waterworks it could consequently furnish the power from them; there would be little additional expense for that agent. The outlay for conductors, lamps, dynamos and other machinery would be the greatest expense, and the saving in the amount now paid to private companies would off-set in a great degree.

The report goes on to say that at the close of the last year there were 198 electric lights, and at the close of 1886 there were 354, an increase of 156 over the previous year, maintained by the city for lighting the public highways, at an average cost of 53¾ cents per night. There were extinguished during the year 312 gas and gasoline lamps, of which 285 were by the Philadelphia Gas Works, 26 by the Northern Liberties Gas Works, and one gasoline lamp, making a total of 737 lamps extinguished where the electric light has been introduced.

The chief recommends that an inspector of electric lights be appointed, and refers to the Temple theatre fire as an instance of the necessity of such an appointment.

The report concludes with the following recommendations for incandescent installation:

"First—Lamps should not be placed in close proximity to inflammable material. The breaking of a lamp will scarcely ignite inflammable solids, but will ignite inflammable and explosive gases or mixtures if present.

"Second—Avoid trusting wire joints without soldering. Any accidental cause may induce the formation of an arc, which might be avoided if the joint were prevented from shaking loose or opening by soldering.

"Third—Use only uninflammable waterproof insulation for the entire system.

"In the case of paraffine and cotton insulation the overheating of the wire by too heavy a current will melt the insulation for its whole length, and on ignition it acts like a taper and flame conductor. If the insulating wire is not waterproof there is the danger of a circuit from rain or water or the condensation of steam.

"Fourth—The use of safety plugs of standard proportion to act as cut-offs if currents become of too great intensity.

"Fifth—Installations to be made entirely by companies, which should assume responsibility for their employés.

"Sixth—Issuing of a permit to use a current only after the department has inspected the covering.

"These are well-known rules to experts in electrical matters, but not as familar to the general public. The very high potential of the series arc system demands that these wires should be kept separate from all others and requires precautions in insulation. The well-known fact of the danger attendant upon the handling of circuits has acted to prevent loss of life on the part of the general public, but accidents to the employés of the companies do occasionally happen because of neglect incidental to familiarity."

The electrical department is busied making arrangements for the 162 new electric lights to be placed in position in this city. It is expected that they will be in operation by April 1st, or as soon as the lamps and fixtures can be erected and the wires run. From 12 to 15 lights will illuminate Broad street from Fairmount avenue to Columbia avenue.

The electrical committee of councils have agreed to report an ordinance favorably to councils, giving the American Long Distance Telegraph and Telephone Company the right to lay conduits all over the city.

PHILADELPHIA, March 17, 1887.

BOSTON.

Proposed Legislation to Regulate Telephone Charges.—Quarterly Report of the New England Telephone Co.—The American Bell Telephone Co.'s Output of Telephones.—The Government Telephone Suit.—U. S. Signal Service Line on Martha's Vineyard.—An Underground System.—Electric Lighting on the Boston & Albany R. R.—Electric Lighting at Newton.—Burning of the Lighting Station at East Boston.—Electric Railways.—Boston Fire Alarm.

ON Wednesday, February 23, the Assembly committee on Mercantile Affairs took up that portion of the proposed legislation relative to the limiting of telephone rates. Mr. George H. Stevens, of Lowell, appeared for Mr. Qua, who was unable to be present. Hon. R. M. Morse, Jr., and Hon. George A. Bruce represented the interests of the American Bell Telephone Co., and Mr. F. H. Williams, the New England Telephone Co. Mr. Stevens submitted the following bill, drawn by Mr. Qua:

Section 1. No individual, company, or corporation now or hereafter owning, controlling or operating telephone lines in this state shall charge, collect or receive as rental, royalty or commission, for the use of telephones with their respective appliances, a sum in excess of that hereafter named, as follows: In telephone exchanges serving a territory with a population less than 10,000 persons, $3 per month, where one set or pair of telephones is rented by one individual, company or corporation, provided such telephones are located or operated at any point within one mile of the central office of such exchange, and for each additional mile or fraction thereof, not more than an additional sum of 50 cents per month shall be charged as aforesaid for the use of such telephone. In telephone exchanges serving a territory with a population of over 10,000 persons and less than 100,000 persons, an additional charge of $1 for each subscriber per month may be charged for the use of each set or pair of telephones. In telephone exchanges serving a territory with a population of 100,000 persons or more, the charge for each set or pair of telephones shall not exceed the following rates: Within one-half mile of the central office, for special wires limited to one subscriber, for business purposes, $5 per month; for residences, $4 per month. For wires limited to two parties, for business purposes, $4.33 per month; for residences, $3.33 per month. For wires having four or more subscribers, for business purposes, $3.50 per month; and for residences, $2.50 per month. Fifty cents per month additional to above rates in the territory last described may be charged for each additional half-mile of distance from the central office of such exchanges.

Sec. 2. When any two cities and towns are connected by wires operated or owned by any individual company or corporation, the price for the use of any telephone, for the purpose of conversation between any such cities and towns, shall not exceed 15 cents for the first five minutes, and for each additional five minutes no sum exceeding five cents shall be charged, collected or received.

Sec. 3. Any owner, operator, agent, or other person, who shall charge, collect or receive for the use of any telephone, any sums in excess of the rates fixed by this act, shall be deemed guilty of a public offense, and on conviction, shall be fined in any sum not exceeding $25.

Sec. 4. This act shall take effect July 1, 1887.

Testimony was given to show that the rates charged by the American Bell are excessive; that the service is insufficient, and that the business is done elsewhere with profit at rates lower than exist in Massachusetts. The witnesses were Dr. S. P. Hubbard of

Digitized by Google

Taunton, Dr. George Morse, of Gloucester, and Edward A. Birge, of Lynn. The hearing will be continued.

New England Telephone Co. The statement of earnings and expenses for the last quarter of 1886 issues this afternoon, and in comparison with the corresponding quarter of 1885, substantial increases are shown in gross and net receipts, but heavy charges to construction result in a decreased surplus. For the year a slight falling off is shown in gross, but decreased expenses result in increased net earnings, while the surplus over construction was nearly 20 per cent. larger for 1886 than for 1885. Full details are shown in the following tabulation :

Quarter ended December 31—	1886.	1885.	Increase.
Gross earnings	$346,239	$321,100	$15,139
Operating expense	171,226	167,079	4,147
Net earnings	$65,013	$54,021	$10,992
Construction	34,972	1,458	33,514
Surplus	$30,041	$52,563	*$22,522
Year—	1886.	1885.	Increase.
Gross earnings	$917,611	$920,581	*$2,970
Operating expense	659,695	668,092	*8,397
Net earnings	$257,916	$252,489	$5,427
Construction	37,819	68,461	*30,642
Surplus	$220,097	$184,028	$36,069

*Decrease.

The output of telephones by the American Bell Co. for the month ended February 20, and the first two months of the fiscal year, is herewith tabulated :

February	1887.	1886.	Increase.
Gross output	3,405	3,223	182
Returned	1,918	1,408	510
Net output	1,487	1,815	*328
Dec. 21 to Feb. 20—	1886-7.	1885-6.	Increase.
Gross output	7,379	6,003	1,376
Returned	3,874	2,956	918
Net output	3,505	3,047	458

*Decrease.

Comparison with previous months—

	Feb.	Jan.	Dec.	Nov.	Oct.	Sept.
Gross	3,405	3,974	3,946	3,340	3,259	3,800
Returned	1,918	1,956	1 686	1,825	1,745	1,258
Net	1,487	2,018	2,260	1,515	1,514	2,542

In the case of the United States *vs.* American Bell Telephone Co., a motion has been filed by defendant for leave to plead certain facts in addition to filing a demurrer to the bill. It alleges that, inasmuch as the bill in this case refers to litigation and controversy formerly had with reference to the validity and scope of the patents which are the subject-matter of the bill, but does not state the result of such litigation, or the decisions made therein, or the fact that questions of fact and of law sought to be raised by the bill in this case have been argued before the Supreme Court in suits for infringement of these two patents, and are now held under advisement—the proper course for defendant is to plead these facts in order to bring them before the court. For that reason it asks leave of the court to plead any and all determinations, had, relating to, or affecting the validity and scope of said patents and to the facts upon which their validity or scope depends, in addition to filing a demurrer, and represents that the questions which it desires to raise by such plea are closely akin to those which would be raised by demurrer, and that much time, expense and labor will be saved by presenting and arguing them at the same time. It further desires to present in this way copies of certain written communications from the commissioner of patents to Elisha Gray, dated February 19 and 26, 1876, which are referred to in the bill, but copies of which are not annexed thereto. Defendant says further that the litigation heretofore had under the said patents has resulted in records filling twenty thousand printed pages, including more than seven hundred depositions, which have required many years to take and which have cost each side not less than $300,000 ; that such records are now before the United States Supreme Court on appeal, and have been the subject of 12 days of argument there, and are now held under advisement. The defendant further says that it would be indecorous and contrary to the practice and usages of the Court of Equity to re-try any questions pending before that court until it shall have pronounced its opinion and judgment, or to require such expensive litigation to be repeated in this case until the questions of the power and authority of this court to entertain this bill, and the propriety of its so doing as a court of equity, have been fully determined, upon the facts stated in the bill, and upon a consideration of the results of the suits and litigation referred to in the bill, but not fully stated.

On Monday, March 14th, a hearing was had in the U. S. Circuit Court, upon the above. Messrs. Storrow and Smith appearing for the American Bell Co., and Messrs. Goode and Jeff. Chandler, for the government. The court took the case under advisement.

The government has set up a telephone line connecting the signal station at Vineyard Haven with Gay Head, and when a pole has been set up cautionary signals can be displayed from a point near the lighthouse. The line can be used by masters of ships wrecked in that neighborhood for summoning assistance from Vineyard Haven.

Representatives of several telephone, telegraph and electric light companies went out to Brighton on the afternoon of the 2d inst. to inspect a new arrangement for carrying underground wires—a conduit recently patented by the American Conduit Company. These gentlemen, recognizing the fact that eventually all wires must go underground, have after three months of experimenting succeeded in perfecting a machine for the manufacture of what they consider an imperishable conduit. They claim that it is practically indestructible, and that it can be manufactured and put underground at a cost less than is required to keep wires and poles above ground in repair for a year. The conduits are manufactured from cement and sand, and after being shaped are treated to a bath of hot asphaltum, which makes them impervious to water and perfect insulators as well. If the system of heating business establishments and houses by steam from a central station through underground tunnels should ever be adopted, these conduits could be used for running the pipes. This is understood to be the "Richardson system."

Within the last few weeks many passengers on the Boston and Albany Railroad have noticed one car that was lighted by incandescent electric lamps. The power for the lamps is derived from a storage battery beneath the car. The apparatus was placed on the car by the Julien Electric Company of New York, which holds letters patent in this country for the Julien storage battery. The car equipped on the Boston and Albany was the first trial of a system on a railroad in this country, and its surprising success has led that road to order other cars equipped as fast as possible, and has created much interest in the subject on the part of other prominent railroad companies.

The car carries twenty-four sixteen-candle power incandescent lamps, and the power is furnished by a Julien storage battery of 60 cells, which will keep all the lights burning for 10 hours. Each cell consists of 19 plates, weighing in all twenty-seven pounds, and measures 6½ by 5¾ inches, and is eight inches high. These cells are combined in boxes for convenience in carrying and in charging, and the whole battery of 60 cells weighs about one ton. With the ordinary lamps removed, the car presents a novel and handsome appearance, and when the current is turned on it is lighted with a clear and steady light, with which oil cannot compete, Passengers find the light agreeable to read by, the train hands have no trouble with smoky lamps, and best of all, the danger from fire in case of accident is entirely removed. This car has been running now for thirty days, and thus far but one lamp has been broken, and at no time has any trouble been experienced with the light.

At a meeting of the board of aldermen, of Newton, on the 21st ult., the electric light question came up. The committee on street lights reported in favor of making a contract with the Newton Electric Light and Power Company to furnish the city from March 1 to June 1, with 30 arc lights, of not less than 1200 c. p., and 84 arc lights of the same power from June 1 next to June 1, 1888. Said lights to burn every night from sunset to sunrise, and for the sum of 50 cents per light per night. An order covering the above was presented, discussed and finally referred back to the committee, with instructions to ascertain the expense of lighting the principal squares and streets according to the "moon schedule," or on such nights in the year as the moon does not shine.

At East Boston, at about 6.55 o'clock, on the morning of the 6th inst., a fire occurred which destroyed the two-story wooden building, sixty feet long and twenty-five feet deep, on Condor street, occupied by the Citizens' Electric Light Company. The building was an old one, valued at about $1,200. In it were several dynamos, valued at about $8,000 or $10,000, which were considerably damaged. The cause of the fire is unknown.

The visit of the Boston aldermen to Scranton, Pa., is significant, if for no other reason, from the fact that it so closely follows a call of inspection recently made to the same locality by several of the gentlemen composing the West End syndicate to judge of the practical working of the electrical street railway now in operation there. According to one of the visitors, Mr. Henry D. Hyde, they all came away satisfied that electricity as a motive power for street railways has come, and while many details of application and convenience will yet be added to it, the success of the thing seems to be assured. The car was geared for running five miles an hour up the heavy grades, and on the level stretches fifteen miles an hour. Both rates of speed were easily made, and the car ran easily, steadily, and was in full control of the driver, if he may so be called. The motor is placed upon the front platform, which is enclosed very much like a pilot house, where also is a hand brake, by which the speed of the car is controlled and checked. The whole handling of the car is very simple and effective, and over all suburban routes it would seem as though it can go into immediate operation. In the more thickly settled portions of a city like Boston, there are some objections to overhead wires, which no doubt will at an early day be overcome. The electricity is conducted by a wire suspended from cross wires across the street, and there seems to

Digitized by Google

be no more objection to this form of using electricity than comes from telegraph, telephone and electric lighting. Mr. Hyde continuing, said, "None of us, with the exception of Mr. Frank L. Pope, had any special knowledge of electricity or its application, and yet the whole arrangement seemed to all of us very simple and effective, and I shall look for as rapid a development of electricity as a motive power in the propelling of street cars as we have seen in the improvement of the electric light since it first came, and it seems at once feasible and practicable, as I have said, for suburban purposes. We have made arrangements for taking an unoccupied street upon the Back Bay and at once placing a car in operation, with the leave of the city, upon which we propose to try the different forms of applying electricity which are now being offered."

For some months the Boston fire commissioners have been experimenting with the system of turning fire alarms into the permanent engine houses only in the districts where they exist, discontinuing the striking of the tower bells wherever possible, as in other large cities. The plan has worked so satisfactorily, that they have to-day extended the area over which the general public will be left uninformed of the existence of fires, except by a sight of the passage of an apparatus through the streets. All bells north of Dover street are now silent when an alarm is given except the six-thousand-pound bell on Faneuil Hall, which will be kept in the system until further notice. The business part of the city, with the exception of the vicinity of Faneuil Hall, will be spared the infliction of the sounding bells and the consequent crowds they draw to fires, however slight they may be. The outlying districts, however, will be informed of fires in their locality, whether by day or by night. The police stations, the insurance and newspaper offices are connected with the system by direct wires, so that the down-town public, while having no instantaneous information, are not deprived of facts when they have come to pass.

BOSTON, March 16, 1887.

CHICAGO.

Failure to Repeal the Indiana Telephone Legislation.—Exhibition of a Large Van Depoele Dynamo.—City Electric Lighting.

IT was expected that Indiana would go back on her record. It was believed that the Solons of the state, after two years of growl and grab in the telephone business, would, as far as lay in their power, undo the mischief they had unwittingly accomplished through knowing so much about the business; but Indiana can be depended upon as well as one can rely on the finding of a petit jury. One thing is always on top down there—politics. When the party horn blows, the rank and file fly to the standard, dress to the right, and stand at attention. Then, instanter, the old-time fight commences; business falls to the rear; important measures of public weal are as chaff in the breeze; the banner of the party is waving, the long roll has sounded, and "whoop, huzza, and away we go," and may the proprietor of the old Calvinistic bake-oven take the hindmost.

The repeal bill which had passed the house had proceeded as far as the second reading in the senate, and would have certainly become a law had it had one more chance for its life. It went by the board—was laid over indefinitely, because so much time had been wasted in the political squabble, and because a clause in the constitution limits the duration of the session. It is well that there is a limit to a legislative session in Indiana. Were it otherwise, there is no knowing what result might be reached by the wise men of the Hoosier state. There may be an extra session. The governor, in the event of calling together the Solons, must state specifically what questions are to be considered. These, and these only, may come before the legislature in an extra session. There were so many other questions of importance left in an unfinished condition that it is highly improbable so little a thing as a telephone rate should be among the matters for consideration; and, beside, there is little prospect of an extra session. Should we all live, we may possibly hear of the repeal bill two years from now, but—it's in Indiana. Let us hope that justice may yet perch above the capitol of Indiana, and—stop, right there! Not one share, sir—not one share! Let us change the subject.

Several gentlemen, including members of the press, were invited on the 15th to witness the labors of Van Depoele's monster generator, built for the Montgomery, Ala., street railroad system. This road, in all its ramifications, covers a linear track of about twelve miles. The machine—of 250 h. p.—has been very properly christened the GIANT. It stands four and one-half feet high in its stockings—that is, on its base—is nine feet in length from heel to heel of magnets, and has an armature shaft seven feet long. The weight of the little gem is about six tons! The general form of the giant is that of the typical Van Depoele dynamo, and it is excited by a similar small machine. The GIANT running at 380 revolutions, was generating 500 volts pressure. The fields, which are energized by an exciter dynamo, were receiving about three amperes of current, and the dynamo was running twelve single car motors, absorbing about three amperes each—without load—in multiple arc. The arrangement of the brushes in these motors is such that reversals are made by changing contacts, there being two pairs of brushes. When the quadrant is on the centre neither brushes touch; when moved to the right one pair, and when moved to the left the other pair, are put in contact, giving it either a forward or backward motion, at will.

The little motors are less than three feet high, and very compact. The driver has complete control of the machine, a horizontal crank, with a sweep of a little over half a circle, doing the work. Two-thirds of the way round is a spring stop, which is the point of greatest efficiency of one form, while, beyond this, the course of the current is changed by shunts running into the field magnets, giving a greater but different form of work. While speed is required, or desirable, at times, at others—as in climbing a grade, or when hauling extra heavy loads—less speed and more pull may be necessary.

The time draws near when our city council either will or will not inaugurate a proposed scheme, which is to be the commencement of the end, in the matter of bridging, for the good people of Chicago, on their way morning, noon and night, from one side of the river to the other.

Professor J. P. Barrett, to whom the city is almost solely indebted for the underground movement (the professor was the original and only "ground hog" for a long time), is doing his level best to get the council to appropriate $75,000 for a city plant of arc lights along the shores of the river, from Chicago avenue to 22d street, and from the junction of the rivers to Rush street. This was referred to in this column in the January number of THE ELECTRICIAN AND ELECTRICAL ENGINEER, but at that time the matter was vague and uncertain. The question of bridging, as summer approaches, is becoming an argument of high potency, and the fact that, in a few weeks, at the most, the howl of the tugs and the fearfully-long strings of waiting street cars and vehicles will make life a burden to the business man, or the belated traveler, cannot be overlooked or forgotten. Something must be done; and this move, if the council will but look at it in the proper light, and give the professor his wished-for appropriation, will do wonders, and save thousands of hours every day to the community, by lighting the waterways so perfectly at night that the passing vessels may do their coming and going without hindrance after business hours, and leave to the good people for whom the bridges were made an opportunity to use them in daylight.

But it must be done before the first of April, or wait for another year. Let us hope.

CHICAGO, March 15, 1887.

SAN FRANCISCO.

The Postal Telegraph Company's Pacific Lines.—A New Pacific Railway.—Western Union Notes.—An Electric Street Railway for San Francisco.—Success of the Electric Railway at Los Angeles.—A Storage Battery Company.—New Quarters of the Pacific Bell Telephone Company.—Underground Wires.—Service on "Postal" Lines from San Francisco to Portland.—"Col." Tichenor and his Mud Battery.

THE Postal Telegraph lines are not yet open for public business, nor can the management say definitely when they will be. They have learned that 1,200 miles of telegraph line cannot be built and completed satisfactorily, in three months. Mr. Rosener thinks the writer did them an injustice in his last letter, by not making allowance for the innumerable difficulties they have had to surmount. No one appreciates these more than the writer, hence he raised a warning voice that it would be unwise to open as early as even the first of March, with only a northern outlet to depend upon. Mr. Rosener has seen the wisdom of waiting. The criticism upon the manner in which the line between here and Port Costa was built, was based upon personal observation. It is now learned that the whims of farmers have compelled the "Postal" to remove poles and place them in some of the most outlandish places before granting right of way through their grounds. From Redding to Yreka, over the Shasta mountains, is the worst piece of territory in America on which to build lines; and it is about as bad through the timber country north from Tacoma to New Westminister, B. C. Wires in this section will be at the mercy of falling trees for at least six weeks yet; but, the management give assurance that when they do open they mean business and are in the field to stay. It is rumored too, that at an early day they contemplate building a southern outlet. This is as it should be, and it is safe to say that, profiting by their northern experience, the southern line will be built in a manner to command admiration and disarm criticism.

Mr. James Gamble has been elected president of the United States Central Railway Company. This company proposes to build a railway from Alameda or Berkeley through Centra Costa county, San Joaquin valley, into Inyo county, southern Nevada, southern Utah and Colorado, there to form a connection with eastern roads. It will be a short route and will pass through the

Digitized by Google

finest territory on the Pacific slope. Mr. Gamble may leave for New York in a few days to confer with some of the millionaire railway magnates. He declines to give an opinion on the future of the "Postal," as he thinks it is too early, and he wants to see what other connections they will secure.

The Western Union have now a No. 11 copper wire between here and Chicago, except across the bay, where there is no cable competent to meet it. In May a new one will be laid, which will be able to bear a large battery. We are told it will be worked "Wheatstone." We are told also it will be worked "quad." What will really be worked, time alone can tell. Experience with the Wheatstone between Chicago and New York ought to indicate that it will never do for overland business unless competent operators are employed for punchers and transcribers. If the Western Union uses Wheatstone the innumerable "bulls" consequent, will drive many a disgusted customer over to the "Postal."

The manner in which the Western Union men have been worked for the last two months in this city, is simply shameful. The hours often include 3, 5 and 7 hours extra service a night without a cent compensation. It is not because wires are in trouble, it is the extraordinary amount of business and reports transmitted; and yet in the face of this great rush insufficient force is kept on to meet the volume of business. Ambitious chief operators, who desire to make a name for themselves at the expense of their fellow-men, merit the just condemnation of all, and sooner or later the boomerang will return and smite the hands that flung it. It is a poor policy.

A party of gentlemen met at the residence of Adolph Sutro, in this city, a few weeks ago, including Messrs. J. W. Mackay, S. Rosener, M. C. Laven, George Roe, N. S. Keith and Mr. Speed, to discuss the practicability of an electric railroad along Harrison street, south of Bernal Heights and the Patrero. The system represented by Mr. Speed was finally adopted, as it is running with a great deal of success in Denver, Colorado; and it was determined to experiment on it for a distance of about four or five blocks on Fillmore street hill, the Brush Electric Light Company supplying the power, each car having a separate motor. If this is successful, it is safe to say, a line will soon be established from the ferries to Point Labos and Sutro Heights (old Cliff House). Such a line would afford the greatest interest to visitors, as it would command a view of the Golden Gate, the Presidio, Lime and Fort points, and the Pacific ocean.

The electric railway in Los Angeles is running very satisfactorily for a distance of about three miles, and it is safe to predict, that with a little time and consequent improvements it will supersede the cable system.

The Pacific Accumulator Company has been formed with George S. Ladd as president, and Messrs. Moriarty and Armstrong, of New York, as directors. It will occupy the Fair building on Pine street with the Pacific Bell Telephone Company, which has recently moved thither. One cannot easily do justice to the manner in which the Pacific Bell Telephone company has fitted up its offices and operating rooms. It has the entire five stories. The upper one contains Mr. Sabin's office and operating room. Here is the Western Electric multiple switch ($25,000) with a capacity of 4,000 circuits and operating 2,000. It is a wonderful piece of mechanism. At one end of the room is a section exclusively for the Sunset Telephone Company, which means country connections with Sacramento and intermediate towns on one side and Santa Cruz and intermediates on the other. On the next floor below, is Mr. Ladd's office, fitted up in a gorgeous manner. Here is a magnificent book case presented to Mr. Ladd years ago by the employés of the Western Union, when he retired from that company. The case was too large for a private dwelling, and Mr. Ladd has placed it in his new quarters. The lower floor is for the public and supply rooms, as well as a cloak and lunch room for the women employed as operators. This is in charge of a woman who cooks for them and cares for their clothing. It is worthy of mention that the company furnishes the lunch and an occasional cup of tea *free*.

The Telephone company has purchased cables and all the necessary material for laying underground conduits, and is urging the present board of supervisors to grant a franchise. It is to be hoped that it will be obtained. The mayor and chief engineer of the fire department are favorable to granting the franchise. Six supervisors are all that is needed.

Mr. Atchison, superintendent of construction of the "Postal," will leave for the east in a few days. Had he been here earlier, a few errors would have been obviated.

Many a telegraph office is neat, some are handsome, but such a *bijou* as the "Postal" have here is a rarity, if not unique. It is simply perfect. It should be noted that the duplex circuit to Portland, 800 miles, works without a repeater, the signals being as *clear* as on a city wire. If the remainder of the wire east works equally well, there will be no need to introduce Wheatstone. Good men on such wires can double discount any Wheatstone ever worked—day in and day out.

"Colonel" Anson C. Tichenor has come to the surface again, this time as the inventor of a famous scheme for making electricity out of mud and water. The first utilization of this marvelous force has been made at the Baldwin theatre. In the basement under the stage a friend of Tichenor's was found keeping guard over the mud machine, a great double battery of no less than 126 cells. At the bottom of each of these cells there had been plumped, so the guardian said, about a pound of the marvelous mud; water was poured in, and then, when the light was needed, the usual time-honored sheets of zinc and carbon were let down into the water, and hey! presto! the extraordinary electricity was generated. Under ordinary circumstances such a battery would produce a 2,000 candle-power light. What it did produce was a very bright spark of about 50 candle-power, whenever Mephisto brought his sword into contact with that of Valentine in the play on the stage above. The so-called mud is a soft clay slate found, so Tichenor's friend said, at Alameda and Aptos. It either contains a small proportion of chromic acid, say 2 per cent. or the acid is mixed with the clay after being dug up. When the water is poured on it the result is a weakly acidulated water, and this acting on the immense surface of exposed zinc in the 126 cells produces an electric spark.

SAN FRANCISCO, March 4, 1887.

LITERATURE.

PERIODICALS.

Industries; a Journal of Engineering, Electricity, and Chemistry for the Mechanical and Manufacturing Trades: London and Manchester (England),

A weekly, started in June last, has now reached its thirty-sixth number. It covers a broad field, treating a wide range of topics with much ability and judgment. Electricity receives a fair share of attention; the editors evincing a judicious discrimination in selecting for description and discussion the features of electrical science and practice most pertinent to the problems of the time. The mechanical execution of the journal leaves little to be desired; paper, printing and illustrations being of unusual excellence. The engraving of the elaborate triple expansion engines of the steamship "Ormuz," in the number for January 28th, is remarkable for its effectiveness.

Land & Rail, Birmingham, Ala., a monthly journal, of which the initial number, dated January, 1887, reached us some weeks ago, frankly announces itself "as the champion of the Real Estate and Railway Interests of the south." The industrial growth of the south in the last few years, particularly in Alabama and Georgia, has been so striking a feature in the life of the country, as to make any championship seem almost superfluous. The services of champions are usually in behalf of the weak, down-trodden or unfortunate—none of which terms can apply to the section of the South around Birmingham. Nevertheless, it is gratifying to see southern interest in real estate and railroad growth exemplified in the pages of a journal such as *Land & Rail*.

CATALOGUES AND PAMPHLETS RECEIVED.

From far off Santa Barbara, comes a little pamphlet, issued by the Board of Trade of that city, setting forth the beauty and salubrity of the location as well as the enterprise of its people. An electric light system is among the recent public improvements. The description of Santa Barbara with its soft climate, lovely surroundings, its roses and greenery, with the Pacific rolling at its doors, is very enticing to the busy worker of an eastern city.

The Woodhouse & Rawson Electrical Supply Co., of Great Britain, Limited, have sent us their complete catalogue, which is published by them at the price of one shilling. We do not remember to have seen a more complete catalogue of electrical goods. It not only gives the prices and full particulars of all the electrical supplies that are connected with Messrs. Woodhouse & Rawson's name, but we also notice the prices and details of goods of many other well-known manufacturers.

The price list gives particulars of electric lighting outfit, both arc and incandescent, including power, such as steam and gas engines, turbines, &c., electric bells, signals, telephones, and nearly every application of electricity—except telegraph instruments—are represented. The catalogue is well and profusely illustrated. This catalogue indicates that English firms mean to keep in the front as manufacturers and traders in electrical appliances.

Dr. A. M. Rosenbrugh sends us a pamphlet containing a reprint from the *Canadian Journal*, of his papers read before the Canadian Institute on Telegraphing to and from Railway Trains, and on Duplex Telephony.

ELECTRICAL NEWS AND NOTES.

AMERICAN INSTITUTE OF ELECTRICAL ENGINEERS.

FOURTH SPECIAL MEETING.

Continuing the agreeable practice of an occasional meeting through the winter, preceded by a dinner, thirty members and friends of the Institute met at Cable's restaurant, March 15th, Mr. Frank L. Pope, President, in the chair.

The proceedings were as follows:

The President—Gentlemen of the Institute: It affords me great pleasure to be able to meet with you once more. I had begun to

Digitized by Google

think that I should not see you again during the season. I am glad to see so large an attendance here.

The subject announced for discussion this evening is the distribution of electricity by secondary generators. As you all know, the matter of the distribution of electricity for lighting, by induction apparatus, variously called secondary generators, transformers, converters, etc., is attracting a great deal of attention at the present time, although it is not a particularly new thing; in fact it has been in operation in one form or another constantly since the early part of 1883; it is, however, only quite recently that it has been brought into what can be called a commercial shape.

Very many of you are doubtless aware of the fact, that something over a year ago I was commissioned by Mr. George Westinghouse, Jr., of Pittsburg, now the president of the Westinghouse Electric Co., to go over to Europe and make an examination of the induction system, and, if found advisable, to purchase some of the leading inventions in that line for use in this country. Mr. Westinghouse had already made some promising experiments with the system, and had become much interested in it. So I went to London in January, 1886, and there had the pleasure of seeing an installation of some 2,500 lights working on the Gaulard and Gibbs system, at that time the only important installation which had been made. I saw at once that there were great possibilities in the system, although it was not by any means worked out practically, as our electricians would work it out in this country; but nevertheless, I was so well satisfied with the results already attained and in respect to the possible results which we could get when we put our young men in this country on it, that I closed the purchase of the Gaulard and Gibbs rights for the United States. Until within a year past the matter does not seem to have attracted any general attention in this country, but within a few months a great deal of work has been done, and it certainly seems now to have a great future before it. Theoretically it is without doubt a system of the utmost interest. There are many novel points in it—novel I mean in the sense that they have not hitherto been worked out practically. The principle of the action of the induction coil is to-day a profound mystery to a great many electrical people, and I must confess it is not any too well understood even by the best of us. My own work in connection with the subject has not been at all of a practical character; in fact, I have scarcely had an opportunity during the past year to examine any of the practical installations that have been put in, of which there are now quite a number.

Dr. Otto A. Moses—What I have to say on this subject is not of a very profound character. I have only investigated it for the last few months. I considered it in its scientific aspect for some time, and when making studies in electricity it is but natural that one should be led to the question of induction. There was one thing I would like to say that was suggested to me by the action of the light a few minutes ago. (Laughter. A short time previous to Dr Moses' remarks, there had occurred a violent blink in the incandescent lamps used in the meeting room.) I would not have stood in the shoes of the man who was in charge of the station where that thing occurred for something handsome. He is in a profuse perspiration at the present moment. There is a man in that Pearl street station in his shirt sleeves tugging away at a brush about that wide (illustrating). There is a stream of fire about that long (illustrating) from it, and there is a general gathering of the hive; all the hands are down on that dynamo floor, which is shaking now like the inside of a rolling mill, or where trip-hammers are going, and they are trying by every effort of will in the world to stop the trouble. They do not dare to put their hands on it, because if they were to attempt to stop that sparking at the commutator at this particular moment, they would have flashes everywhere, and they would be very heavy. That is the weak point down there, and it seemed to come very fortunately for us, just to show what the advantage is of a secondary distribution. In the secondary system at present, electricity is distributed in alternating currents. An alternating current machine does all that sort of working inside of it. The production and distribution of alternating currents is so simple a matter that the very first dynamo machine ever made was constructed on that principle. I recollect when Comte du Moncel told me of the consternation with which the people who were interested in the Alliance machine came to him one day and said "The thing won't decompose water"—for which purpose it was being made. "Well," he said, "I don't see any other way to do than to make it decompose water by turning it into a machine with currents of one direction, but if it were my affair I would leave it an alternating machine. Why not use the current at once for making light, instead of decomposing water with it in order to get light from the recomposition of its elements?" It was a very unfortunate thing that the alternating current machine did not decompose water, because we would have been about 20 years further in advance in the application of electrical science. That was the quietus of the alternating current machine for the time being. Well, they made a continuous current machine that decomposed water; but soon found they could make light a great deal cheaper by that alternating current machine than by combining hydrogen and oxygen. The first alternating current machine they made I have seen working near Havre in the lighthouse. It has never been stopped but once, and that was in order to put in a pillow block. No accident has happened to it, and it has been going on beautifully ever since. It was put in in 1862 or 1863, I think. But it was a cumbersome machine; however, it was as smooth running and as strong as anything possibly can be. Now, the alternating current machine is so simple that it is a wonder to me that it did not continue in general use. But then there came another matter to give it a set back. M. Archereau, discovered that a solenoid was a very excellent means of regulating a lamp. You could not use the alternating current with that. Therefore, the whole stream of invention ran into the channel of continuous current machines, and from that moment continuous current machines were universally studied because they could operate the regulating device of the ordinary solenoid arc lamp; and as the arc light business was the great one by which electricity was going to be built up as the power for general use, practical continuous current machines were invented and generally adopted. Now, when a thing once gets on the ways, sliding down like a 10,000 ton ship, you cannot stop it. It is bound to go, and when everybody's mind gets to acting in a given direction, it is bound to go on on that route.

The invention of the Jablochkoff candle gave another stimulus to the alternating current machine; but popular prejudice, excited by the death of a careless sailor on a Russian royal yacht, caused its almost total abandonment for use in electric lighting; and finally, the introduction of incandescent lighting on a great scale on continuous current circuits made it disappear entirely from use. But now the alternating current machine has taken a new and grand departure, because we find that you can only distribute currents by secondary generators when they are alternating in their character. Therefore, the alternating current machine has to be introduced. Now, the consequence is, that the alternating current machine is found to possess great advantages that were hidden, simply because they were not exploited in the beginning. They are coming now to the front, and it will be the machine for all distribution of electrical power. That sounds like a pretty broad statement when we know that motors are to be run on continuous currents. But what is the difficulty if you have got an alternating current machine that sends its currents to and fro? Why, usually you send it to and fro through the same point. You can send it *to* here and you can send it *fro* there, and you can have all the continuous current you please on the one side, and all the continuous current you please on the other side. So that an alternating current machine can be made a continuous current one. Therefore, you can apply the alternating current machine to any of the uses to which a continuous current machine is now applied.

Now, to come to the point, I would say that the practical application of this thing has been demonstrated to my satisfaction, and that it means to me a good deal. I think that alternating currents used for secondary generators are going to drive out all the small appliances for the distribution of power that are now used. We are going to have from that secondary generation a revolution. It is going to result finally in a commercial revolution. We will find currents distributed abroad in every direction, in every house, and we will have power at command for all purposes, just as we have it here at this moment in the incandescent lights around us; and that is all going to come about through this alternating distribution. I was in Pittsburgh the other day and saw this thing working, and it was very gratifying to one who has been through a good many of the mills of experiment. I had seen the first work done in incandescent lighting, and I knew what the difficulties were, and how long it took to overcome them. One insurmountable difficulty, the distribution of that light by continuous currents over great areas, still exists; for the rapid increase in the size and weight of the conductors is a bar to the extension of the system of distribution beyond a narrow limit, where large quantities of current of low potential are used.

There is in Milan, Italy, a very large system of distribution of electric light, supplying some six or seven thousand incandescent lamps of this kind, from a central station. One of the owners and originators of that plant was Prof. Colombo. You may have met that able gentleman when he was here. He came to study the distribution in the city of New York, and he was so well pleased with it that he went back to Milan and started a successful central station there. He was subsequently appointed a commissioner at the Turin electrical exhibition, when he was called upon to make an investigation of this very Gaulard and Gibbs matter; and although he was deeply interested in the central station there—the Edison central station—he, in a published paper, admitted that the method of distribution of currents of 100 volts potential was limited to an area of about 500 meters radius. In a great city that amounts to limiting it to such a degree that it is impracticable. All the influences in Paris that could be brought to bear to cause a central station to be established within its walls were ineffectual. That shows that continuous currents with an electromotive force of 100 volts and thereabouts can only be used for distributing power or for lighting purposes within very small areas.

Digitized by Google

Now, Prof. Colombo went further—although it was really against his own interest to say so; but as one of the commissioners of the exhibition he was called upon to make a report, and he made it. He said that the Gaulard and Gibbs system was going to solve the question of the bringing of power to a distribution in a city. That is, to solve the question of electrical distribution you have to combine the bringing of alternating currents there, and distributing them at lower potentials. He did not say anything about how you were going to transform the currents from alternating to continuous. He did say it was desirable to do it; he said it was a very necessary thing to be done. I add his reason by saying that he saw it was a necessary thing to save a good many of the eggs that he had in that basket. Well, that was a statement from a man whose entire interests were in other directions. Now, that is a very good way, by the bye, to judge of the value of an opinion. I heard it once said, by a lawyer who was also a judge, that the true way to find out what a man's merit was, to see what his enemies gave him credit for, because that he must have. Now, in this particular case, the merit of the Gaulard and Gibbs matter has been fully recognized by Prof. Colombo (one of the best authorities in Europe) as the thing that is going to bring the current from outside a city to points within it for low potential distribution. I go a step further, and say, I do not see why it may not get there and then distribute itself, changing itself, without the intermediation of a machine, at the door of the consumer, into perfectly safe currents, as is done by the Westinghouse system of electrical distribution.

Captain O. E. Michaelis—I have very little to say. It happens that I am living at a place where some few friends of mine conceived the idea of starting an electric light installation ; and because they had an idea that as I knew something about guns and equipment I must know something about electricity, they spoke to me about it, and I thought it was time that I tried to learn something about it myself. You know that Marryatt has written a book called "Japhet in Search of His Father," and I might write a book called "Michaelis in Search of an Electric Light." I think it might be worth reading. I have a great many friends in the Institute, all agreeable gentlemen, and I thought I would see my friends first. They treated me very kindly ; took me to the Astor House, Delmonico's, Cable's, etc., and I began to get bewildered. All the lights were good and I did not know what to advise.

In the course of my wanderings I struck a little hill town not a thousand miles from here, with not quite 5,000 inhabitants. I was provided with half a dozen letters to the electricians of the place. I arrived there one Sunday afternoon. Unfortunately the gentlemen to whom I had letters were absent. I hobnobbed with one of the men of the town whom I met at the hotel. We were searching for the same thing. It was not an electric light, however, in this case. We became acquainted and I found that he was one of the stockholders in the electric light company of the place He took me to his store and opened it, and I spent a couple of hours with him, and I obtained a good deal of information that I thought would be of interest to my friends at home, and I think it has proved so. Now, this little town is way up in the hills ; there is not a single prevailing industry in the place. It is a little country town. I arrived there Sunday afternoon at 4 o'clock, and the first thing that struck me was that the town was peculiarly lighted up. It was the first experience I had of this peculiar illuminant. It was natural gas. I asked my friend what he paid for this light? He said 50 cents a month. I said electricity cannot compete with that. I asked him if they had any gas there? He said that they had a gas company that had been charging $3 a thousand, but they had put it down to $1.90 since this new light had come in. I said, what have you got in the way of electricity? He then showed me the electric lighting. He took me to their station, and I was much struck by it. It was a business looking place. There wasn't anything that was not needed, and everything that was required was in in its proper place. I said: "What did this cost you?" He told me they had formed a lighting company with a capital of $15,000. They had a 600 or 650 light plant. They had purchased the ground on which the building stood and had paid all their expenses and had just about exhausted their capital. It was a sort of co-partnership ; all the lights were subscribed for. The large room at the hotel, where we met originally, which I suppose was perhaps 40x40 feet, was well lighted with 6 16 candle-power lamps. I went to other places and was delighted with the illumination. One man using the electric light would say, "I do not use this light as much as others do," and they would charge him so much less. I calculated that the average commercial light was sold for $8 per year per lamp. That gave them an income of $5,000. I footed up the cost of their service and expenses, and I found it to amount to about $2,000 a year. I must, however, say that the coal was very cheap. They were only paying 4 cents a bushel for it. Now, this gentleman not being an electrician, I must confess that you cannot rely upon his figures, you know, but they had made, according to his figures, about 20 per cent. on their capital. Now, I do not want to advertise any company ; I do not even like to say where this place was, but I think, Mr. President, that this is a matter which is encouraging to all electric light companies. Perhaps it was a fortunate accident for this special company that it had its plant there. I have no objection to telling you that the town was the city of Greensburgh, in the mountains of Pennsylvania, and that the company that put in the plant was the Westinghouse Electric Company, of Pittsburg.

Prof. Elihu Thomson—Mr. President and Gentlemen—This is the first opportunity I have had of meeting the members of the Institute, and I am very glad that I came down. On former occasions I have been entirely too busy and pre-engaged to make it convenient to leave the place where we carry on most of our operations.

The subject for discussion this evening is one of very great and growing importance. I am forced to recall a little experiment I made in illustration of the reversibility of an induction coil, before the Franklin Institute, of Philadelphia, in 1877. I then gave a course of lectures on electricity, and the main principle put forth was that electricity of all kinds and characters—statical, dynamical, or whatever you choose to name it, was really the same thing and of exactly the same nature, differing only in potential—pressure or electromotive force—and volume. I exhibited, of course, in illustration of this, Rhumkorff's coil, and while preparing the lecture, it struck me that it would be a very pretty experiment if I could reverse the process, and instead of getting discharges which would have the statical properties, I should take my Leyden jars and put the Leyden jar discharge through the fine wire of the Rhumkorff and see what I would get in the primary circuit. This I did, and I was somewhat astonished at the volume of current which seemed to come out of the primary. I expected, of course, to get a heavy current. I knew perfectly well that the Rhumkorff coil must be reversible, but I was surprised to see the energy that the Leyden jar discharge displayed when it was turned into what was then called the quantity current: the ends of the primary wire being brought together, there was a bright green flash, and after repeating the experiment once or twice the wires actually stuck firmly together. It was with difficulty that I separated them. They bent a little, and with a good pull they separated. There was a sufficient proof of the reversibility of the induction coil. The capacity of the Leyden jars was three gallons. The spark which fused the coil was an inch and a quarter long. Another fact came out in the experiment which was very striking. We are all familiar with the loud snap produced by the Leyden jar discharge and the bright flash. I was surprised to see, however, that the spark which struck through the coil was exactly like the Rhumkorff spark. It occupied a time. It didn't go with that sudden energy with which the Leyden jar discharged, but it went through with the appearance of the ordinary Rhumkorff spark. This thinning out was no doubt due to the retardation which occurred in that discharge. That is, a portion of the current started out first, for we must in that case call the Leyden jar discharge a current, even though it may last a billionth of a second. It passed through, as I say, in the character of a Rhumkorff spark, and the primary current seemed also to last for the same length of time. This experiment was repeated, and the primary wire was also connected with a galvanometer of very coarse wire, and the needle went right up solidly to the stop at every Leyden jar discharge. At that time, I thought it must be perfectly well known to anybody that would dwell upon the conditions.

This experiment left its impression on my mind, and my recent experiments in welding by electricity are really the outgrowth, as I see it, of that little experiment of the Leyden jar discharge sent through the Rhumkorff coil.

When engaged in electric lighting I found it necessary in the construction of dynamos to make good joints on wire, and it was with some difficulty that really good joints were made. Our wire in the early days was only obtainable in about 50-pound lengths of copper, and some of our wires required about 300 pounds, so that we had to make some 5 to 6 joints in every coil. This necessitated, of course, great care on the part of the man making the joints, and he was oftentimes liable to make slips which would not even allow the wire to be bent to and fro. In thinking the matter over, it struck me that electricity would do that work, but the thing was to get the currents. They were necessarily enormous. They were necessarily much larger than we had been accustomed to deal with. Probably no electric light currents used in those days in any case gave more than 500 amperes. The machinery had not been developed to a much further extent than that. The induction coil experiment, however, seemed to point out the way, and I designed at that time an apparatus which I thought would answer the purpose, but I was compelled to lay the business away, having no time to develop it further. Taking it up at last, however, I tried the experiment of building a small alternating machine and connecting it to a coil of moderately fine wire, which was to be the primary, and taking a very coarse and heavy secondary, so that the potential of the currents generated in the secondary might not exceed one or two volts at the most, but could run up to thousands of amperes. The first experiments made with the apparatus were entirely successful in joining

Digitized by Google

copper, iron, steel, etc., the wires being of moderate size, of course. I mention these facts simply to show their connection with the subject under discussion. We have there probably the extremest case of what we call conversion from high potential to low potential.

Dr. Moses has mentioned the fact that no commutators are needed on the alternator, and I can say that it was really fortunate for us in welding operations that there are none, because our currents are varied enormously in a very short time. We start out with a piece of metal that probably has only a few square mils in section, and with the same apparatus, we run up to an inch or more in diameter, and if we had a commutator on the machine we, of course, would have to make a new adjustment each time, and every time the current changed greatly it would be very likely to tear out the metal and throw it around, because we run under strong conditions while we are putting on the heaviest gushes of current.

As to the distribution of incandescent lights by the induction coil, I may say, that in the latter part of 1878 and 1879, in company with Prof. Houston, I made some experiments with the design of using a little arc lamp for distribution. It is called a vibrating lamp. The electrodes were vibrated to and from each other, and we used induction coils to give the impulses to vibrate the carbons and also to supply the currents to the little lamps. The incandescent lamp in those days was unknown. There was no such thing as incandescent lamps in 1878, at the time the experiment was made; but gradually the incandescent lamp became known, and induction began to attract some notice in regard to distribution. Now, it always has appeared to me that there never could be any doubts as to the efficiency of a good induction coil; that is, that the losses in an induction coil never could amount to a great deal, if it were properly made. What is a dynamo machine but an induction coil after all? It is a revolving induction coil. We have what might be called the primary circuit in the field magnets, in the magnetism, but instead of reversing the current in the field magnets we reverse the position of the secondary, that is we turn it over to get our impulse. If we turn over a portion of the armature by degrees we get a continuous even flow of current, and if the dynamo can be made to go to an efficiency of 90 per cent., why cannot an induction coil be made to go to an efficiency of 95 per cent? We use a reverse primary. We do not reverse the position of our armature in relation to the magnetic field developed by the field magnets, but we make our field magnets reverse and divide them up by laminations or by making them of fine iron wire; put plenty of iron in the coil and the losses should not be any more in making the conversion, so far as Foucault currents or local currents in the iron are concerned, than they are in a well constructed laminated armature.

In regard to the use of alternating currents, let us see if there is any possible objection to the use of them. There has been a great prejudice against alternating currents, which I think has gradually been removed on account of the very fact that they alternate, and that they are thought to offer danger of severe shocks. We have learned to look upon alternating currents, somehow, with considerable dread on account of the fact that the current goes this way and that. I had some early experience in that respect. Most of you probably have heard of the Jablochkoff light in which the induction coil was used to throw discharges over a piece of kaolin, only the discharges were of high potential, produced by low potential currents. The electrodes were drawn over the kaolin and a very pretty light, of a moderate intensity, was produced. It was in experimenting on this subject that I managed to get hold of the ends of the induction coil. To say that I was surprised would not express the conditions at all. Prof. Houston, who was present, said that I jumped into the air about three feet, and in doing so I broke away from the wires, but for a moment I felt that if the thing continued a few seconds there would be no more of me. I did not feel it anywhere but in my head, and it seemed as if a thousand corkscrews had been sent in from all sides to mix up matters internally. However, the wires were not very strong and I got away very easily. The shock was probably severe, but the potential was such that the discharge could jump through three-eighths of an inch of clear air, and the wire of the induction coil was not so very fine but that considerable current could flow. The potential was enormous. Now, the other day, in experimenting with alternating currents in which the maximum difference of potential existing was about 1,300 volts, capable of equaling in potential a good circuit of arc lamps, I happened to touch a post and to bring my hand to another post and I felt something rather queer and drew away. The result was I got a little blister on the hand, but that was all. If I had short-circuited an arc current of the same power I would not have got away so easily. I should have come away with my hand very badly burned. But as it was, the alternating current did not follow just as I ruptured the contact. That is a feature of the alternating currents which is very good in rendering them safe. Let us see if we can find any reason for it. The alternating currents rise and they come down and they reverse and so on; but there is a line along the middle of the curve which is neutral. Now, unless the materials are of very high volatility, the spark formed is very apt to be extinguished on that reversing point. And there is another fact which would cause that arc to be extinguished, which is that the effects of self-induction or extra currents in prolonging the discharge are eliminated. It would seem from these considerations that we need not have any great fear of the danger arising from alternating currents. It is very doubtful indeed whether the fluctuations in the arc light current are not quite as great, and whether the injury to a person short-circuiting an arc light current is not due as much to abrupt changes in the current as to the mere current itself,—that is, an arc light current does not usually have the character of an even wave, a smooth wave,—there are segments in the commutator acting like so many break pieces, and whatever effect they produce is effected in inconceivably short spaces of time, and if we could map the wave so produced it would be seen to be very irregular and jerky. Every one has tried the effect of a shock from a magneto-electric machine, and knows that if the field is regular and the contacts are good he can stand a pretty fair shock; but let it be irregular, let some faulty condition occur and give him a shock and then ease up a little and give him some more and it will be found to be very exhausting indeed. In the one case he knows what to expect and is prepared for it; in the other he is not. This brings us up to the consideration of the nature of the alternating current itself. It is a rhythmic wave, and it can be made so perfect and smooth that at any portion of the wave the change of current is very slight. There need be no sudden jump of current. Let us see whether we have any facts which would lead us to think that there is a difference of that kind between the ordinary arc light and the alternating current. In studying the use of alternating currents, it occurred to us there might be some difficulty in running lines on account of interference with telephones. Injunctions might be served on anybody running lines if the alternating currents had a bad effect on the telephone lines. To test that matter we ran parallel lines to the arc light circuit, using about the same strength of current on each, and I was surprised at the results. The alternating current line did not give us any induction in the telephone, while we had fifty feet or more parallel, and the arc light current gave us strong induction—a rattling, scraping sound; and when I thought of it, it all seemed very clear. At every segment of the commutator of the arc dynamo there was a little break. A difference was produced in the telephone circuit, so sudden that it was bound to produce a wave that would shake the diaphragm—a kind of scratching, irregular sound, nothing melodious about it. Then we arranged the conditions so that we could get induction from the alternating current alone to the telephone, by increasing the length and coiling the wire a little, and gradually we could hear the hum of the alternator; but it was music compared to the other. It was a musical tone; you could talk through it and not be bothered by it in the least. It is doubtful, as one of our men suggested, whether we could not, in case we had difficulty, play a tune; that is, we could send chords over the line by sending impulses the right way, so as to make everybody happy. I do not say that all alternating currents are of that character; but I do think that there is no difficulty whatever in constructing machines that will give waves that are very easy, regular and just as perfect as the waves produced by a fine tuning-fork, without any abrupt changes. I have no doubt that in the construction of alternating current machines, in which there are irregular changes in the magnetic circuits quickly effected, that the impulses would be harsh and rough. But if these changes are smooth and gradual, there is no reason why the sound produced in telephones by induction should not be very smooth and melodious, rather than disagreeable.

The President—I am sure we have all listened with a great deal of pleasure and profit to the remarks of Prof. Thomson, and although it is not exactly in the line of the subject we are discussing this evening, I am sure that we are more than pleased to hear something about the origin of his remarkably interesting discovery of the method of welding metals by electricity. I happened to be in England at the time that Prof. Thomson's discovery was announced. A cable despatch of ten or fifteen words was published, which created a most unusual excitement among the electrical and metallurgical people over there, and although upon sober second thought, some of them have since discovered that "it is not true," and others that "everybody knew it before," I assure you that very little of that was heard the first week.

One point to which Professor Thomson has called attention, the similarity between the principle of the induction coil and that of the dynamo, and which he has illustrated so beautifully, needs to be better understood than it is. The induction coil, as he has shown us, is nothing in the world but a stationary dynamo, in which the magnetic poles are moved within the mass of the iron core instead of the iron being moved in mass, carrying the poles with it: and, therefore, it seems very plain, as he has shown us, that we ought to get a higher percentage of efficiency from a well designed inductorium than is possible from the most perfectly constructed dynamo; because all the mechanical difficulties that are encountered in arranging for the free rotation

Digitized by Google

of the armature are eliminated. We can bring the reactive parts in closer physical relation with each other, and in that way increase the percentage efficiency.

In regard to one other remark made by Prof. Thomson in respect to inductive interferences with the telephone systems, I was told, in London, that the inductive lighting circuit was originally about six miles in length, a large square loop embracing perhaps eight or ten city blocks, or more, and the commotion that it created in the telephone exchanges in that region was something frightful. Injunctions were applied for, and there was a great row. Finally, as the result of considerable discussion on the subject, the circuit was re-arranged in the form of a double loop; that is, the loop was formed into a crescent shape, the wire out and back being carried on the same supports all the way. This change immediately removed the disturbance; you cannot hear it in any of the telephones in London, although some of the lines go through the same neighborhood. The fact is that the currents of the direct and return circuits seem to neutralize each other, or at all events they are effectually neutralized. The inductive disturbance does not interfere with the telephone. We would be pleased to hear Mr. Wetzler on this subject.

Mr. Wetzler—I do not know, Mr. President and gentlemen, that I can enlighten you much on this subject. But it strikes me that the point of utilizing a high potential current of low quantity for the purpose of facilitating distribution is one which may be looked upon in another light; that is to say, we may use a continuous current and interrupt it. That system has been brought out recently, and seems to present some quite interesting points. The arc current to-day may be considered in that light. We have there the conditions of a high potential circuit with low quantity. Why may we not by suitable apparatus break that current at certain points, utilize it to put our secondary generators in operation, and then continue it on; or, if you will, break it directly at a central station and use the broken continuous current (if you might so call it) in the same way as you would the alternating current? That system has been brought out recently and presents some considerations worthy of notice.

We have all heard of the advantages, and also of some disadvantages of the secondary generator system in this country, as presented here. It may interest the members to hear the opinions of some foreign electricians on the subject. Dr. Moses has given us Prof. Colombo's opinion, which is very favorable; and I think, for the sake of discussion, that some of the unfavorable opinions might be brought forward. In a pamphlet recently issued by the Siemenses, of Berlin, they flatly deny the utility of the secondary generator system. They say, in effect, that isolated installations, even large ones, are practicable on this system, as witness some of the installations already existing in Europe. These they consider, however, only isolated systems, though on a large scale. For a general distribution they claim that the thing is not feasible, in fact, is not as good as the ordinary two-wire direct distribution. However, they premise that all distribution must be done by underground conductors. They say that if you want to distribute generally, an overhead system will not do the business; that there are too many uncertainties in connection with it, and that you must go underground. Now they figure up that to put underground a high potential system, in which instead of using 100 volts ordinarily you use 2,000 volts, with a corresponding reduction in copper, the money you save, and interest, on that copper will not make a difference of one per cent. in your expenses; that the copper in the underground conductors is but a portion of the cost; that the insulation required will cost as much as the copper, no matter what the size of your conductor is; and that what you gain in conductor you will lose in insulator. They bring out the usual argument against the alternating current as not available for motors, the use of which they regard an important consideration in electrical distribution. How far these objections are good or how far they can be removed remains to be seen. I think they can be removed, if they are not removed already. But such are the opinions of Siemens, which have some weight, whatever his motives may be. He also says that you cannot regulate your secondary generator within the limits necessary to give satisfactory incandescent lighting. He says that secondary generators cannot regulate closer than four per cent when turning on all the lights, and that that is not sufficiently close. I believe that objection can be removed if it exists.

The President—I would say in respect to one point raised by Mr. Siemens, that it is not quite clear to me, since a secondary generator is in fact nothing more than a dynamo, why it is not possible to regulate as closely with a generator as it is with the dynamo in direct distribution.

Mr. Wetzler—Siemens in his pamphlet criticises other systems, but he says that he has got something that *will* regulate the secondary generator.

Mr. Mailloux—There is one point in Prof. Thomson's remarks which interested me very much; that is the analogy between the dynamo-electric machine and the induction coil. In the discussion of secondary transformers before the Electrical Society at the last meeting, I dwelt rather at length on that point. It is undoubtedly true that ideally considered the dynamo electric machine is an instrument for producing alternating currents; that we only reverse them by means of a commutator. In the dynamo we employ mechanical energy and it gives us back electrical energy. At the electrical exhibition in 1884, I remember seeing an apparatus designed by Prof. Thomson. It was a dynamo-electric machine, in which there were two armatures; one of the armatures was wound with wire capable of standing the arc light current, and it had a commutator; the other armature had small collectors. There we have what I call a first-class analogue of the induction coil, because we take electrical energy of high potential and we transform it into electrical energy of low potential. Now, considering the analogy just stated, we readily see that we are taking energy of one potential from the arc light circuit and transforming it into energy of a lower potential, but of greater volume, and in each case the amount of energy converted can be estimated by the ratio of the electromotive forces.

Prof. Thomson states that the efficiency of a dynamo being as high as 90 per cent., there is no reason why we should not have even a higher efficiency in the induction coil. That is true. In the secondary generator or transformer, we have no dead wire. In a dynamo there is always some wire which is dead at the ends of the armature, or inside of it, where it is not subjected to the action of lines of force. In an induction coil, on the contrary, every particle of the wire is placed in a magnetic field, and necessarily we must have a greater efficiency of transformation.

With regard to effects upon telephone lines, the remarks of Prof. Thomson bring to mind very interesting facts in connection with the Van Rysselberghe telegraph and telephone system in Europe. Mr. Van Rysselberghe endeavors to prevent induction in telephonic lines by subjecting the electric impulses of telegraph lines to a process by which they become undulatory; he gives them that rhythm which Prof. Thomson alludes to, and when he has done so he finds that they become powerless to produce induction on telephone lines. The facts are well known; and to-day, in Europe, the Van Rysselberghe system is very extensively used on telegraph wires, and the impulses of telegraphy, which are sharp and abrupt, are so modified by introducing condensers and coils, or equivalents, that they assume this harmonic form, so that they become incapable of producing any disturbing effect on the telephone; the telephonic impulses can be superposed over them and reproduce articulate speech.

One important point with regard to secondary generators has not been alluded to this evening, namely, the static effects which may arise. We see at once that a transformer is composed of conductors and a dielectric. If we consider the secondary as merely a certain amount of surface, with the circuit open we have in effect two large surfaces brought into close proximity to each other, but separated by a dielectric. Remembering that the charge of a condenser varies with the electromotive force into the capacity, it seems quite plain that even a very small capacity would be able to give rise to very large static charges. It is true that we reverse the impulses of the dynamo, and that the reversals take place so quickly that the process of charging, which requires a certain amount of time, will not have time to take place fully. When the subject was first discussed in Europe there was some apprehension in this regard, and I have heard that in some installations, I do not know whether in this country or in Europe, it had been found in practice that static sparks could be drawn from transformers. This feature certainly demands investigation, and if it should prove to be at all an evil, a remedy must be provided for it. I understand that Prof. Thomson has anticipated this problem, and he may have suggested a remedy.

Prof. Thomson—In regard to the efficiency of the wire of the induction coil, I may say that it is certainly possible to produce a higher electromotive force in a wire subject to induction than it is possible to produce in a dynamo armature. It is practically a greater speed that does it; that is, the alternation may be made at various rates; we can have 10,000 alternations per minute or we can have 15,000 or 20,000, and it would naturally result, if the field of the induction coil should be changed 20,000 times and to the same degree, that the wire should give out in the secondary —a certain length of wire should give out—twice the electromotive force that it would when subjected to 10,000 alternations, and also that the primary wire should kick back, as we may say, with a double kick, or in other words, be able to hold back an electromotive force twice as great.

(Prof. Thomson here made a diagrammatic sketch of a transformer on the blackboard.)

The question arises: Is the secondary wire in the magnetic field? It is not; that is a certain fact. The magnetic field is around it and does not show any polarity whatever, and the secondary wire is not in the field; but the secondary wire *was* in the field at the moment that the magnetization was going on. Consequently, the secondary wire gives out a current when the primary wire is beginning to take the current and up to the maximum which it may reach.

Now, what will be the effect, if we pass a current through this primary wire? It will cause circular magnetism around it,

Digitized by Google

and that circular magnetism will emanate in all directions quickly, and stop when it reaches the best medium, that is, when it gets into the iron. That is my view of the action. I do not know that it has been adopted at all; but I look at it in that way; that the wire conveying a current gives out, as it were, shells of magnetism rapidly expanding to large dimensions. But if they meet with such a good atmosphere as iron, they condense themselves in the iron. What does the secondary do? If it has an open circuit it does nothing. If it has a closed circuit it develops a current. I say when it has an open circuit it does nothing; I am not strictly correct there. It develops only an electromotive force in the two ends, which, if it gets a circuit will produce a current. But the very fact of the passage of the current in the secondary tends to produce just the opposite magnetization; that is, the secondary tends to produce an opposing field of its own. But if the primary is much the stronger, the secondary has no chance to have any field of its own, and it kicks all the harder for that reason; that is, it gives out more current just because it cannot have its own way.

Now, what have we in the alternating current? We have an increasing positive current from zero up to maximum, then down to the zero, and then negative to a similar maximum, and so on throughout. What useful voltage shall we assign to that current? Shall it be the maximum difference of potential? Or the average difference? It is evident that in running an incandescent lamp the average E. M. F. is the effective voltage, and not the extreme E. M. F. With a 75 volt lamp on an alternating current, the maximum difference of potential required is probably nearer 150 volts. We have an instant during an alternation when the potential is zero. We must then take the average and that is the effective voltage. This gives us another view of the electromotive force developed in a coil.

In relation to the static charge, I do not attach very much importance to that, for the reason that the actual amount of condensing surface in the induction coil is not great after all. It is possible that with induction coils working hundreds of lights, there might be a stinging shock obtained by touching the wire of the induction coil. The static charge does certainly exist; but it represents very little current, so that a person may take it without any danger. A person standing on an insulated stool can have 10-inch sparks drawn from him and he does not mind it at all. He can charge his body to a potential of many thousands of volts and he can discharge that potential from his knuckle without any other feeling than a little shock in the arm. It may benumb you a little but it does not amount to anything. As to another source of danger, in the use of induction coils, such an accident as this may happen at any time—by moisture or by faulty construction or some other such cause, the primary may become connected with the secondary or be so close to it as to cause a leak from one to the other. No particular danger should result from that alone, although there would be a more vigorous discharge, statical in character from such a connected secondary, because on the one side you would have a rather long line, and at this one point you would be able to get the discharge of your whole line in rapid succession; but the chief danger in such a case is the formation of a second contact to ground. The secondary coil which had a contact to the primary would necessarily take the potential of the line. Now, a person may go to the lamp under those conditions and his fixture might be near a metal object, it might be connected by moisture, he might stand on the moist floor and the result would be the current would come down through his body and he would be subjected to the full potential, and there is no doubt that if he should be foolish enough to stay there he would have to stay there until somebody took him away. But a man when he is shocked generally drops away from the thing that shocks him; but he may be, as we term it, hung up: that is, he cannot let go, and that is undoubtedly the reason why accidents happen in arc light distribution. If a man can get away at once, even such a potential as 2,000 or 3,000 volts will not kill him, as we have had plenty of experience to prove. To avoid such dangers in alternating current lines we provide a very simple means. We ground our secondary. If the insulation between the primary and secondary is as good as it ought to be at all times, the grounding of the secondary will not hurt anytning, that is certain. What then occurs? If the man takes hold of the secondary wire and touches a radiator connected with the ground, or a water pipe, he is already shunted by a good conductor and he cannot get anything to hurt him. That addition to the system would save us from all shocks; but it would introduce another element of irregularity and danger; that is, it would provoke contacts to the secondary line; but if a contact does occur, cut your line off altogether by putting a fusible plug in the circuit leading to the primary, so that if there is any diversion of current through to the secondary and to ground, the plug will blow out. There is another danger, of course, in having this ground connection and that is the danger of atmospheric discharges. That can be avoided by making the insulation heavy, and putting near the primary line where it enters the building, or at any convenient point, an ordinary lightning arrester. Of course it would be necessary in running such a system to test it for grounds just as lines are tested to-day.

Mr. Wm. L. Church—My proper office here would naturally be to defend the secondary system, the converter system, against attack; but I find there has been no serious objection raised; in fact there seems to be a unanimity of sentiment in favor of it, insomuch that it seems to me if we were placed in series we might generate 4,000 or 5,000 volts electromotive force in the way of commendation of the system. With reference to the opinion of Dr. Siemens I have only to say this, that I would reply to his criticisms by subscribing my fair share toward paying his passage to this country to see the thing done. I was recently at Daly's theatre and witnessed that charming production of Shakespeare's "Taming of the Shrew," and heard Petruchio insist that the moon was shining when in fact it was the sun; and it strikes me as absurd—if I may be allowed to couple that term with so distinguished a man as Dr. Siemens—to state that secondary converters will not regulate well enough for practical use, whilst the company with which I am associated is operating these converters commercially, deriving their pay from the plants, and the whole thing is reduced to an ordinary matter of fact. The variation is not appreciable by any observations that we can bring to bear upon it outside of the laboratory. We are putting in 100 volts and taking out better than 98 in selling them to people and getting our pay for them. I contend that the final touchstone in the eyes of the practical men and, more important, in the eyes of the man to whom we sell is,—can I take this thing, disregarding the whyness and simply secure the result and put it in my vest pocket?

The question has been raised as to whether the distribution upon this high potential system by underground circuits might not be in practice as costly as upon the ordinary multiple arc plan. Let us look at it from the commercial standpoint. Reduction in quantity of copper is not the sole element of economy. In fact I think there has been an injustice done to the secondary system by insisting that its prime usefulness lay in the reduction of the first cost of primary wiring. That is one way to put it. The use of the converter system—high potential system—permits the running of wires on a very small percentage of drop. With the ordinary multiple arc system and low potential, the quantity of copper required is so great that we have to sacrifice 10 or 15 per cent. of drop to secure a reasonable cost of copper; while the converter system enables us to run upon a two per cent. loss in the mains, and that saving is a merchantable article in some form anyway you figure it up; you may sell it to a customer and put the dollar in your pocket.

I might drift along, touching upon many points which are in no sense scientific, and yet seem to me to carry much weight if we consider the question in its practical and every day aspect. I am pleased to say that so far as our work has progressed—and we are treating it entirely on a commercial basis—there has seemed to result no serious difficulty.

Prof. Thomson has alluded to one other feature of the system. He states that one of the characteristics of certain forms of broken current is that they discourage your moral nature entirely, by the intermittent and very sudden and unexpected changes they take on; while on the contrary, the peculilarly rhythmic and wavy motion of the alternating current is a tranquilizer, and the alternating machine may therefore be said to be a moral agent. I have noticed the effects upon my own moral nature, and I confess I was unable to account for it until this moment.

Mr. Ralph W. Pope—One of the objects of the Institute, I presume, is to do justice to all the systems, and as the lighting system which is affording us radiance this evening has furnished a text for two or three of the speakers on account of its winking and blinking, I might say in explanation, that this particular plant is operated by a dynamo in the building. But that is not the point I wished to bring to your notice. This scene of revelry has now continued to such a late hour that the dynamo in the building is not equal to the emergency. Through foresight of this state of things, earlier in the evening the lighting was switched to the central station system, and this switching operation caused the blinking which we saw.

Dr. Moses—I stand corrected.

Dr. Moses made further interesting comments on features of the discussion, illustrating by blackboard sketches, and recalling striking points in Faraday's experiments in induction.

Mr. Elias T. Ries—It has been stated by Prof. Thomson that the alternating current that he used, on account of its undulatory character, had no effect on the telephone wires running parallel with it. I should like Prof. Thomson to please inform us what the potential of the alternating current was. If those undulations had no effect, would not the slight undulations of the telephone current itself be still less effective in causing the diaphragm to respond to them? Another point,—it has been stated by Mr. Pope, in referring to an English electric light system using secondary generators, that the disturbing effects upon neighboring telephone wires was eliminated when the main lines, out and back, were run parallel and close together, the incoming currents neutralizing the outgoing currents to such an extent that

Digitized by Google

their effect upon the telephone and telegraph lines was not noticed practically. If that is the case, is it to be assumed that on such a circuit the interruptions, the alternating impulses, will reduce their mutal efficiency, or is such reduction only effective with respect to the surrounding telephone and telegraph wire?

The President—Perhaps I had better show by diagram the arrangement of the wires in London. (Making a sketch on blackboard and explaining.)

In the original arrangement the main wire ran through the district, taking in points on one side and back to the central station through points on the other side, the convertors being in series, that is, the circuit described an irregular figure enclosing the district. In the new arrangement the out and in wires are near together throughout, in fact are on the same poles or fixtures. The telephone lines ran in all directions. The wires were in all cases put on top of the building. Although they do not have any overhead system in London, this lighting system is all overhead. The present arrangement is found not to interfere with the telephone service. The Westinghouse company had a line at Pittsburg some two miles long or more, which went on the same poles as the telephone lines.

Mr. A. P. Wright—At Plainfield I have no trouble. I cross my lines at every third pole. I started at Plainfield to put in the old system of direct current, and Mr. Westinghouse came to me one day and told me to remove my machines and install the alternating system. I knew nothing of that system at the time. We put up there a 650 light machine, and we have now wired the business portion of the town. We have running at present some 450 lights. I went down to Pittsburg and was there for two days, and saw a thousand lights running three miles from the factory. I returned, and two months after that I had my station in order. I started there with green men. When I was ready I signaled to the engineer to start, watched my volt-meter and went out to look at my lights. They were all right, and since that time we have had no trouble whatever with our machines. We started on the 1st of February. With regard to the variation in potential due to different loads on the converter, I had a little experience. In one case I had one converter working independently, and I had wired on that 53 lights in one store and 16 in another. This was on a side street and I had no means of connecting it up with the other sets of converters. The 53 lights were not intended to be on at the same time, but when we started, the people at the store naturally played with the thing a great deal. I happened to be in the store at one time and I noticed a little change in the light when a large number of lights were turned off. I could see a change and I drew the attention of others to it, but they did not perceive it. It was not perceptible to the uninitiated; I was looking for it and saw it. It was a 50-light converter, and it was sometimes running 60 lights for a few moments. As far as regulation is concerned, we require no regulation in our station to speak of. When a large load is taken off we vary the current from our exciter a little, but there never is so much load taken off at one time as to affect that very materially. We take readings about every fifteen minutes; that seems to be about as often as is necessary. We have had no trouble with the armature. It has been running now since the first of February, 15 hours a day on an average.

Mr. S. S. Wheeler—I am not sure that I understand what Dr. Siemens' objection is, but from what Mr. Wetzler says—that the system would not regulate within four per cent. I imagine that he means that when the load of lamps is increased, the increase of current would cause a loss of potential in the coil. If that is the only difficulty, I do not see why that cannot be overcome. These converter coils seem to work very well indeed, and I do not see why they cannot be handled in just the same way as the dynamo is handled. If they won't regulate, why cannot they be made to regulate? For instance, if the loss is due to increasing the number of lamps why not turn on more coil as more lamps are turned on, or why could not a differential wiring be used?

Mr. Church—In reading the reports of the Electric Light Convention at Philadelphia, I noticed statements to the effect that we had been burning out armatures rapidly. My partner, Mr. Kerr, replied very properly that it made no difference whether that was so or not—that it was an incident of construction. But the fact is that out of the entire complement of stations we have running, we burnt our first armature last week. We do not exactly know what it was due to. But the meter was reading some 65 amperes on a machine calculated to give but 45, and there was a short circuit somewhere that was taking an immense amount of current and the armature, of course, gradually heated up. The people on the circuit knew nothing about it. That was the first burnt out armature outside of our own experimental work in the shop. We have ripped out four armatures by simple mechanical contact. The wires got in contact with the field poles and were simply stripped off from the armature without the slightest burning—purely a mechanical action. A statement was also made that we were suffering enormously from the short life of the converters. The truth is that we burnt our first converter about ten days or two weeks ago.

Mr. Martin—I would like to ask Mr. Wright in regard to the distribution of these converters. My friend Duncan in Pittsburg, is very well pleased with a secondary generator plant there, and stated to the Convention that he had some of his converters on the poles, but stated that in some cases he did not think it necessary to have them there but attached them to the buildings.

Mr. Wright—At present my converters are on the poles. My lighting is scattered. They are sometimes about four or five poles apart, a great deal depending upon the disposition of the lighting. Of course I may have occasion to place my converters in the interiors of buildings in some cases, but generally outside the build ings. I propose in Plainfield, in the residence portion of the town, to run my branches from the sub mains into the central portions of the blocks.

I may mention that I am running the lamps that are in the station at 104 volts. My lights out on the circuit are well up to candle-power with 104 volts in the station. In fact people tell me my lights are over candle-power. At present I am regulating simply by my station lights.

Mr. Ries—Are the primary coils of the transformers connected in parallel?

Mr. Wright—In parallel.

Mr. Ries—And you find the regulation for that reason better; the parallel connection tends to facilitate the regulation?

Mr. Wright—Certainly. Although it is not generally intended to connect the secondaries, I should do so in the business portion of the town.

Mr. Mailloux—I would like to have somebody tell me whether anything has been done to develop the application of the secondary transformers for distributing power in motors. Dr. Moses has told us that he could send one impulse *to* and the other *fro* from the same machine. It would be interesting to know whether this to and fro matter is only theoretical or whether it is practical and has been accomplished. I would also like to enquire whether in the event of a system of distribution by periodic impulses of one polarity on each circuit, the size of the transformer, and to a certain extent the method of its application, would not need to be changed to conform to the different manner in which the energy would be distributed, because we shall have energy being supplied by the circuit for only half the time, and of the energy so supplied we must store enough in the induction coil to maintain the supplies during the other half. In other words, it must produce a certain magnetic reaction which will be sufficient to keep up the energy during the remaining half.

I would also like to know what has been found in practice to be the difference in efficiency between coil of the ordinary straight description and those of circular form, which are generally used for distributing. I have had this question submitted to me lately on several occasions, and I was of the opinion that the difference in efficiency would not exceed 2 or 3 per cent. I would like to know whether any such data have been obtained from practice.

The President—I think that the point raised by Mr. Mailloux, was pretty thoroughly investigated by Prof. Ferraris. His conclusion was something like this—that there was no particular difference in the co-efficient of efficiency, but that a good deal less amount of iron and copper was required to do the work with the closed core than with the open one.

Mr. Mansfield—The subject of the distribution of electricity for lighting purposes, by means of the converters, has been pretty well handled; but I fail to see the commercial advantage of the converter. In the installation at Plainfield, we have not such a great distance to annihilate, and all men who are engaged in the transmission of power are talking about annihilating space. I do not see that there would be any economy over the direct system, unless you go to a distance when you want your alternating currents or your high potentials so as to annihilate the distance. You use your converters or transformers to get the electromotive force down to a working basis. With motors, I presume the same converters can be used. When I first started in the electrical field, which was only a short time ago, I heard Dr. Moses speak in the most glowing terms of placing some sort of an electrical machine in the bottom of a coal mine in the wilds of Pennsylvania and transmitting the energy to New York and utilizing it for our lights. I thought that was a grand scheme. But of late I have had to figure somewhat on transmitting energy to a distance, and I met in connection with that an exceedingly practical man. He asked me if I could transmit to any distance any amount of energy. I said Yes. He wanted to know how far. I told him any distance he wanted, and he specified 25 miles, and he went a little higher and I thought I would keep on as high as he did. Finally he got to a certain point where he smiled and asked me if I was aware of a method of transmitting energy which was tied up. Well, I did not just see what he meant, and I said No. He then spoke of the great railroad systems which we have now, and that set me thinking, and I went home and commenced to figure, and from the census reports found that the cost for transporting a ton of freight on the great railroads was only about 7 mills per ton mile. Well, you can easily figure from that basis that a railroad will be a formidable rival if you go up to 25 or 50 miles. People can transmit the coal from one place to another, burn the coal in their furnaces

Digitized by Google

and produce their energy through steam much more cheaply than we could by electricity.

Mr. Mailloux—How about water power? If there is a natural source of energy, how are you going to get that to a distant town?

Mr. Mansfield—The natural sources of energy in this country are to a certain extent mythical. If you will consult the census reports you will see that there is not so much water lying around loose as some people think, and that the Lowell mills and the Lawrence mills and the Paterson mills and the mills at Holyoke have steam engines. In my opinion a station established with the ordinary arc light potential in the middle of New York city, exactly in the centre of the longitudinal axis of the island, would quite easily handle the motor problem in the entire city, and at even a less potential than they are using on some of the arc light circuits. After all, perhaps, in the arc light circuit we motor men have a means for carrying on our business without interpolating converters.

Prof. Thomson—In regard to the economy of wiring, I think that you may say that taking high potentials and distributing in multiple arc, there is a point just there. In an arc light circuit we have to take the whole current *all around* the circuit; that is the wire must be large enough to carry with a small loss the whole current to the end of the circuit which may be 5 miles away and back again.

In a multiple arc circuit at high potential, part of the energy is given out at a short distance; we do not carry that portion any further. The amount of copper needed will be very much less to carry the same energy than on an arc light circuit. Take it at equivalent electromotive force and assume that your work is done over a district pretty evenly, and you are delivering, say, energy equal to 10 h. p. at a block or two away; that energy has not to be included in the current which is traversing the whole line, it is dropped right there. Now, the energy which goes further is carried by the current, and so it goes; so that there is really an actual saving of wire, a considerable saving over the wire used on an arc light circuit.

In regard to induction effects on neighboring wires I may say that a double wire going out and returning is almost a necessity in the running of arc lights. Almost all arc light circuits go and return on the same poles, and the nearer the outgoing and returning wires are placed the better it will be. But as we cannot place them close together, we can do the next best thing—we can interchange their positions—cross and recross back. All that we have to do is to produce such a condition in the wiring as will not give an effective magnetic field which can act on other wires, or if we do get magnetic fields which will get on the other wires, we must use opposing ones.

With the alternating current machine you can turn up and down a lamp without a loss of energy amounting to anything. Now that seems a surprising fact, but it is true, The lamp may be run just as you would a gas burner; turn it down so that the filament is red, by a little attachment no bigger than my fist. It is simply the interposition of a very little coil—not an induction coil—sheathed in iron, and the capability of putting more or less wire into the circuit, in other words putting a counter electromotive force in the circuit. It will obstruct the current going through the lamp, and will do that not as a resistance in the lamp, but by throwing the electromotive force back on itself. That can be done to a single lamp or it can be done to a group of lamps.

With continuous current circuits there has been and is a continual strain after high voltage lamps. It is almost regarded as impracticable to run any distance unless you use 100 or 110 volt lamps, the highest that can be commercially made. The reason is, that when you get beyond that, the filament will almost sag by its own weight, and the 100 volt lamps that are made to-day are generally of a low efficiency, compared to lamps of lower voltage which will give exactly the same life. A 50 volt lamp, for example, can be made to use less energy than a 100 volt lamp, and give the same light.

Mr. Wright—About three watts, or even less, as compared to four.

Prof. Thomson—But when you get much below three watts you sacrifice life considerably.

In regard to the regulation, a station operating on a continuous current system over any distance has a drop which will amount to probably 10, 15 and sometimes even 20 per cent., and that is the case especially where the object is to save wire and where the fuel is pretty cheap, and where the heavy losses can be afforded. On the alternating current system the drop can be made certainly very much less on the line. The drop in the induction coil itself is altogether within our control; at least so it appears to me. The high work which is obtained from the wiring makes the resistance of the wire bear such a small proportion to the actual electromotive force at work and to the resistance of the circuit on which it operates, that there is a practical regulation. The local line, of course, can be wired so as to give very little drop without involving the use of a great deal of copper.

As to the motor question, I think that the alternating current motors can be made to run nearly as efficiently as continuous current motors, and with the saving of drop in the mains we can afford to run them less efficiently. It is not absolutely necessary to change the high potential current by an induction coil for the motor. If the motor is built to stand the potential in the main circuit, there is no need of reducing the potential.

Mr. Church—Except as a matter of personal safety.

Prof. Thomson—That is all. But it seems to me that as the alternating current motor is an apparatus that has no commutator, the machine may be boxed up and run with fair safety. The only difficulty about running motors is getting them started. The fact is that if the impulses come at a certain rate, unless the motor takes that impulse at the same rate, it will not start; that is, you must give it the speed first; you must put it in tune with the circuit by giving it the speed; then clap on the current and it will run at that speed absolutely. If you overload it you will draw it down and it will stop. Now, I have in my possession a little machine which, put on an alternating current circuit, will start from the state of rest and run right up developing considerable power. That machine may not be as efficient as the alternating current motor is, but I can put that little motor on the same shaft with the larger motor, and give it the speed of that little motor; I have the whole thing under my control. I am not at liberty to describe in full that arrangement. As yet it is not fully developed, but I hope before long to have it in such shape that it can be fully discussed. (Adjourned.)

LONG-DISTANCE TELEPHONY.

At a recent meeting of the Paris Society of Civil Engineers, M. Berthon read a paper on this subject, and gave some interesting figures with regard to silicon bronze. This material was employed for the double line between Paris and Brussels, which cost £4,000, being at the rate of about £20 per mile of double wire of 118 mils. diameter. According to M. Berthon, this bronze has a conductivity varying from 97 to 99 per cent., and a breaking strain of 75 kilometers per square millimeter, which is about 29 tons per square inch. Pure copper has a breaking strain of 28 kilometers, or 18 tons per square inch; but a special silicon bronze is made, in which the breaking strain rises to about 73 tons per square inch. In this case, however, mechanical strength is obtained at a sacrifice of conductivity, the latter being only 20 per cent. of that of pure copper. M. Berthon is not in favor of the Van Rysselberghe system of using ordinary telegraph wires for telephonic communications, because of the large number of anti-induction apparatus which would be required on lines which run alongside of railways, and he thinks it would be on the whole cheaper to establish separate double telephone circuits, arranged spirally, and of fairly low resistance. He is of opinion that with silicon bronze wires 5 mm. (197 mils. diameter) it will be possible to speak to a distance of 950 miles. It is interesting to contrast with this opinion, which, of course, only refers to aerial lines, the theory of telephone cables elaborated by Dr. Wietlisbach, of Berne, and recently published in our contemporary, *The Elektrotechnische Rundschau*. After alluding to the work of Kirchhoff, dealing with the theory of the flow of electricity in submarine cables, and pointing out that the formulæ are not applicable for short telephone cables, the author gives a formula of his own, which represents the current at one end of a cable if the E. M. F. at the other end varies harmonically. It would lead us too far to follow the author in his mathematical investigation, and we will, therefore, only point out that he arrives at the practical result that the distances to which it is possible to speak depend on the product of capacity (in microfarads) and resistance (in ohms), a point which was also very clearly explained by Mr. W. H. Preece during the discussion on Professor S. P. Thompson's paper on telephonic investigations, recently read at the Society of Telegraph Engineers and Electricians. The investigations of Dr. Wietlisbach are of practical interest, because he applies them to a particular form of telephone cable made by Felten & Guilleaume, which is extensively used in Germany. This cable contains 27 wires, each having a resistance of 45 ohms per kilometer, and .24 microfarad capacity. He determines,

Digitized by Google

first, the length of cable for which the intensity of musical sounds is reduced by half, and he finds that for

100	vibrations	per	second,	this length is	33 kilometers.
500	"	"	"	14	"
1,000	"	"	"	10	"
2,000	"	"	"	7.4	"

Assuming 350 vibrations as the fundamental note of the human voice, and making allowance for the over tones, he finds that the transmission of speech by means of this cable is excellent at one kilometer, good at five kilometers, somewhat difficult at 10 kilometers, and impossible at 15 kilometers. The limit to which speech can be transmitted by this cable, placed underground, is, therefore, about six miles. In order to apply his investigation to different cables, it is only necessary to translate the distance given above into the product, capacity and resistance, and thus we find that for 100 microfarad ohms the transmission is excellent, for 300 it is good, for 1,000 difficult, and for 2,500 impossible. As a practical confirmation of Dr. Wietlisbach's theory, it may be interesting to note that in Copenhagen, speech is transmitted perfectly well through telephone cables a little under five miles long. These have 23 ohms resistance and .19 microfarad capacity per kilometer.—*Industries.*

OBITUARY.

DANIEL DAVIS.

On Tuesday, March 22d., 1887, there died at Princeton, Mass., one, who forty years ago was far ahead of his time as a professional electrician and electro-mechanician. This was Mr. Daniel Davis, who was for many years a manufacturer of and dealer in electrical apparatus at 428 Washington street, Boston.

He was born in Princeton, March 8th, 1813. He made much of the earliest telegraph apparatus for Morse, and in his shop also was made one of the earliest sewing machines. The business which he organized is still carried on in Boston by Thomas Hall.

The principal claim of Daniel Davis, to the gratitude of our profession is, however, his treatise on magnetism. This was entitled, "A Manual of Magnetism, including Galvanism, Magnetism, Electro-Magnetism, Electro-Dynamics, Magneto Electricity, and Thermo Electricity," and was published with some 180 original illustrations. The first edition came out in 1842; but it ran through several editions, and is now out of print. Though originally published more to advertise the wares of Mr. Davis, and as a means of calling attention to his business, than as a text book of electro-technics; its value as a *vade-mecum* of electrical information was at once seen, and it appeared that he had builded better than he knew. The first edition of 1842, and the second edition which was published in 1847, were both written under the supervision of Drs. John Bacon, Jr. and William F. Channing, and hence acquired an elegance of style, and a perspicuity of language, which combined with the practical knowledge of Mr. Davis assured the success of the book; which was adopted as a text book by many colleges and high schools; becoming a great favorite especially in the United States Military Academy, at West Point, on account of the many practical demonstrations shown in its pages.

The manual is now extremely scarce and is only to be found on the shelves of second hand bookstores; but it is still highly valued by those fortunate enough to possess a copy, and even at this date many of our ablest electricians are not ashamed to confess that they have learned much from "Davis's Manual of Magnetism."

He was a friend of Charles Grafton Page, the inventor of the induction coil.

THE BALTIMORE AND OHIO TELEGRAPH CO.

The *New York Herald*, March 16th, prints the following interview with Mr. Bates, on the part of its Baltimore correspondent: "President D. H. Bates, of the Baltimore and Ohio Telegraph Co., spent the morning at the central building attending to regular routine business. Just before he left for New York city your representative had a talk with him.

"Are the New York stories true that the Baltimore and Ohio Telegraph Co. is a losing concern?" asked your representative.

"No," he replied.

"How large a business are you doing?"

"We are doing a very heavy business and are making constant additions and extensions to our system. The statement that we are falling behind and have lost a great many thousands of dollars per month have been persistently put forth by the Western Union officials, who could only guess at such things without having any actual knowledge. Their guess is wholly wrong. Since 1884 our mileage has increased three-fold, our revenue four-and-a-half-fold and our traffic nearly seven-fold. We are to-day handling a larger gross traffic than that handled by the Western Union in 1869, but at that time the mileage of the Western Union was double what ours now is, and it then cost them three times as much to perform the same service as it now costs us.

COMPARED WITH WESTERN UNION.

"Within the past three years, during which our company has been most active, the net revenue of our chief competitor has fallen $6,000,000, compared with the three years immediately preceding, while, on the other hand, it has expended during the first named period for additional wires and plant nearly as much as the whole cost of the Baltimore and Ohio telegraph system beyond the line of the Baltimore and Ohio railroad, and the fixed charges of our rival have enormously increased, reaching now the fabulous total of about $60,000,000, calculated at five and a half per cent. per annum. The Baltimore and Ohio Telegraph Co. is greater in mileage than both the Atlantic and Pacific and the American Union Telegraph companies together, which were sold to the Western Union company six years ago for $23,240,000, although they never paid their working expenses. It is twice as great as these companies were in volume of traffic and far more efficient for work.

STRONG ENOUGH.

"On the other hand the Baltimore and Ohio Telegraph Co. last year paid over to the Baltimore and Ohio Railroad Co. a large sum as clear profit on the fiscal year's operations, besides paying for all the batteries, instruments and supplies used by the Baltimore and Ohio railroad for its train service. The youngest offspring of the oldest railroad corporation in the United States, with no fixed charges, and with what I believe to be the best service and most capable staff in the world, can, therefore, be considered as solid and substantial enough to stand alone."

A MARVELOUS TELEPHONE.

Telegraphing on March 8th, the Paris correspondent of the London *Times* said:—"I was invited to be present to-day at some telephone experiments between Paris and Brussels with a new apparatus known as the 'micro-telephone push-button.' These experiments, which were made on behalf of the two telegraphic administrative departments of France and Belgium, produced a very lively impression on those present, and I believe the new apparatus to be the most perfect yet produced.

"As its name indicates, it has the form of an ordinary electric push-button. When the button has been pushed in, and has made a sound at the other extremity, it is taken out, and is found to be attached to a long electric wire. There is thus exposed the telephonic plate, which is extremely sensitive, so that where it is necessary to speak at short distances it is not necessary to come close to the instrument. For communications in the same street, or the same house, the operator places the upper part near himself, and without changing his position he can speak with the correspondent at the opposite extremity.

"But what makes this apparatus the most successful of telephonic instruments is, that it can be made for half-a-crown, that is to say, for not more than the price of the ordinary push-button. Between Paris and Brussels this instrument, costing half-a-crown, worked with admirable precision.

"The inventor is Dr. Cornelius Herz, one day nominated Grand Officer of the Legion of Honor, next day described as an emissary of Germany, and lastly as the friend, adviser, and confident of General Boulanger. He is in reality an electrician whose inventive talent has been stimulated by his residence in America, where there is a boundless demand for improvements in electrical apparatus and in all mechanical contrivances."

ELECTRIC LIGHT AND POWER.

Capt. Moses, of Sheffield, Ala., has closed a contract with the Westinghouse company to light the new city.

Chittenango, N. Y., will be lighted by electricity. Address, Luke McHenry.

An electric light plant is contemplated in Cambridge, Ohio. Address, John M. Ogler.

D. J. McCornell, John C. Anderson, and D. W. Hughes, of Chattanooga, Tenn., have purchased the Brush electric light plant and will make extensive improvements.

The Electric Light and Power Co., Knoxville, Iowa, will establish an electric plant.

Medina, N. Y., will be lighted by electricity. For further information address, Charles H. Hedley.

The Atlantic City Gas and Water Co., John Roberts, president, Atlantic City, N. J., will be lighted by electricity.

Digitized by Google

An electric plant will be established in Sparta, Wis. G. D. Dunn, and others are interested.

The People's Gas and Electric Light Co., Canton, Ill., will establish a plant.

Vinton, Iowa, will be lighted by electricity. S. H. Watson, and others, are interested.

Shenandoah, Pa., will be lighted by electricity. J. S. Kistler, and others, are interested.

Kingston, Pa., will be lighted by electricity. Q. L. Newell is interested.

An electric light plant will be established in Downington, Pa. H. B. McFarlan and S. A. Block, are interested.

Foreign.

Austria.—According to the *Neue Freie Presse* the introduction of the electric light into Vienna is not to be expected at an early date, as the conditions demanded by the municipal authorities are practically prohibitory. They stipulate that all the plant and conductors of the undertaking shall become their property, *without compensation*, if within three months after the contract has expired, and notice has been given, all such conductors, etc., are not removed and the street restored to its former good condition. The authorities further claim the power of demanding an alteration of the conductors "on any grounds whatever," and as often as they may think proper, and, further, of pointing out "defects" in the system (either according to their own judgment, or to that of experts whom they have the sole power of selecting), and of insisting on the removal of such defects within any time at their own discretion. If any damage is perceived in the roadway, or "in other objects," the contractors may be called upon to prove that it has not been occasioned by their workmen. Lastly, for the concession to lay cables into the two court theatres, they demand a yearly rate of 7,750 florins. This represents a yearly rent of 40,000 florins per kilometer for the cable to the Castle theatre, and 3,400 florins per kilometer for the opera house. How exorbitant these demands are we may judge from the fact that the Tramway company has to pay only 2,220 florins per kilometer.

Belgium.—The incandescent lamp is making steady progress in Belgium. Among recent installations of interest is the lighting of the village of Berchem, near Antwerp, and that of a new hospital at Watermael, which has been supplied with 350 lamps fed by gas engines.

Germany.—The Staedtische Elektrizitaetswerke Co., of Berlin, has completed an installation of 36 arc lamps in the Leipziger strasse, at Berlin. According to the terms of the contract entered into between the municipality and the company, the lamps are to furnish a minimum of 2,000 hours of lighting per annum, at the rate of 3d per hour per lamp, so that the annual cost will be not less than £900 per annum. This company is also making preparations for supplying incandescent lighting to a large district in the same quarter of Berlin. The cables will shortly be laid in the Spittlemarket, the Behren strasse, and the Zimmer strasse, and it is anticipated that fully 12,000 lamps will be taken up during the course of the ensuing 12 months.

Scotland.—The first step towards the introduction of the electric light into private houses, says a Glasgow contemporary, has been taken by a south-side burgh, the desired end being hastened by the notoriously bad quality of gas at present supplied by the Glasgow corporation. A city firm is at present erecting the necessary plant on the banks of the Cart to supply the inhabitants of New Cathcart and Mount Florida with the electric light. The terms are unique in their way. The rent for the use of the light is to be based on the actual quantity of gas consumed during the previous year, the receipt of the Glasgow Corporation Gas Co. being accepted. Neither more nor less than the amount on the receipt is to be paid. The erection of the necessary lines has already been commenced.

Spain.—The Spanish government find that they are now able to supply their wants in the way of electric light equipment for their war ships without going beyond their own frontiers. The lighting of the new cruisers "Numancia" and "Pilar" has been entrusted to the Sociedad Espanola de Electricidad.

New Zealand.—The antipodes seem to be fully awake to the fact of electricity being an important industrial adjunct. We notice the successful formation of a company called the "Reefton Electrical Transmission of Power and Lighting Co.," the result of some lectures and ocular demonstrations of both these branches of the modern "Hercules," by Mr. Walter Prince, an electrical engineer of considerable name in the Britain of the south for accomplished successes of both power and lighting. The company in question starts work with about 500 lamps and 60 h. p. transmission for mining work, and Mr. Prince expects to complete the works in about six months. Water power is the initial source of energy.

NEW INCORPORATIONS.

The Dodge City Electric Light and Heating Co., Dodge City, Kas. Capital stock, $50,000. Fr rick Gardner, and others, incorporators.

The Winfield Light, Heat, and Power Co., Winfield, Kas. Capital stock, $10,000. James H. Bullen, and others, incorporators.

The Edison Light and Power Co., Lacrosse, Wis. Capital stock, $150,000. G. Van Steenwyke, W. H. Holcomb, S. Y. Hyde, and others, incorporators.

The Merchants Electric Light Co., New Haven, Conn. Capital stock, $30,000. M. W. Burwell, and others, incorporators.

The Chicopee Electric Light Co., Chicopee, Mass. Capital stock, $10,000. J. W. Cumnock, and others, incorporators.

The Greenport Electric Light and Power Co., Southold, N. Y. Capital stock, $12,000. James T. Carley, and others, incorporators.

The Idaho Springs Electric Light Co., Idaho Springs, Col. Capital stock, $10,000. Albert W. Horn, and others, incorporators.

The Greensburg Electric Light Co., Greensburg, Kas. Capital stock, $100,000. C. W. Myers, and others, incorporators.

The Burdett-Loomis Gas and Electric Light Co., Chicago, Ill. Capital stock, $100,000. Joseph S. Woodruff, and others, incorporators.

The Citizens Electric Light Co., Braddock, Pa. Capital stock, $10,000. Treasurer, W. A. McDevitt.

The Mountain City Electric Light and Illuminating Co., Altoona, Pa. Capital stock, $10,000. Treasurer, E. T. Dunn.

The Northwestern Electric Light and Lighting Co., Chicago, Ill. Capital stock, $200,000. Gideon F. Lanahen, and others, incorporators.

The Lake Shore Electric Light Co., Chicago, Ill. Capital stock, $10,000. William G. Beale, and others, incorporators.

The Westfield Electric Light Co., Westfield, Ill. Capital stock, $25,000. William A. Chase, and others, incorporators.

The East River Electric Light Co., New York City, N. Y. Capital stock, $30,000. John Carroll, and others, incorporators.

The New Rochelle Electric Light Co., New Rochelle, N. Y. William R. Beryholz, and others, incorporators.

The Somerville Electric Light, Heat and Power Co., of Somerville, Mass. Capital stock, $25,000. Oren S. Knapp, and others, incorporators.

The Ann Arbor Thomson-Houston Electric Co., Ann Arbor, Mich. Capital stock, $50,000. Wilbur F. Dowdson, Port Huron, and others, incorporators.

The Trenton Gas and Electric Light Co., Trenton, Mo. Capital stock, $18,000. George Josselyn, and others, incorporators.

The Saratoga Gas and Electric Light Co., Saratoga Springs, N. Y. Capital Stock, $325,000. William Foster, Jr., and others, incorporators.

The Excelsior Electric Co., Harrisburgh, Pa. Capital stock, $40,000. Treasurer, George W. Shank, Wilkes Barre.

The Albany Edison Illuminating Co., Albany, N. Y. Capital stock, $250,000. Henry R. Pierson, and others, incorporators.

The Olney Edison Electric Light Co., Olney, Ill. Capital stock, $10,000. H. M. Hall, and others, incorporators.

The Anthony Illuminating Co , Anthony, Kas. Capital stock, $100,000. T. H. Stevens, and others, incorporators.

The Somerville Electric Light Co., Somerville, Mass. Capital stock, $20,000. Elmer H. Capen, and others, incorporators.

The Canton Electric Light and Power Co., Canton, N. Y. Capital stock, $18,000. Horace D. Sackrider, and others, incorporators.

THE MICROPHONE FOR DETECTING LEAKS.

At the recent congress of gas and water engineers, held at Eisenach, in Germany, it was stated that many German water companies had adopted the microphone as a part of the regular equipment of their turn-cocks in order to enable them to detect the presence and estimate the importance of any leakage. The microphone is fixed upon a plate which can readily be attached to a stop-cock. It is said that the presence of a leakage at the rate of only a few drops a minute can readily be detected by this means.

ELECTRICITY IN MINING.

The transactions of the Mining Institute of Scotland, vol. viii., part 8, contains a long paper by Mr. F. J. Rowan, C. E., on the applications of electricity to mining operations. The topics dealt with include those of lighting, haulage, pumping, winding and ventilation. The experiments of Marcel Deprez on the transmission of power are noticed, and the author compares the various systems of transmitting power. The paper appears to have been very ably prepared, and it is well worthy of perusal by those who are interested in mining operations. Several plates of illustrations accompany the text, amongst them being a good sectional view of the Immisch motor.

RECEPTION AND BALL OF ELECTRIC LIGHT EMPLOYES.

The employés of the Citizens' Electric Illuminating Co., Brooklyn, N. Y., will give a reception and ball at the Palace Skating Rink, Easter Monday evening, April 11th.

Digitized by Google

CORNELL UNIVERSITY.

ANNUAL INSPECTION TOUR OF THE ENGINEERING CLASSES.

As we go to press, the engineering classes of Sibley college are making their annual tour of inspection. Below is the itinerary and programme of the classes in electrical engineering:

SECTION 3.—SPECIAL PROGRAMME OF THE ELECTRICAL ENGINEERS.

Friday, March 25th.—Leave via D., L. & W. at 6.15 A. M. and proceed to Scranton, arriving at 12.25. Inspect the electric railway.

Leave Scranton at 5.20 P. M. for Carbondale. Members of the party unable to leave Ithaca as above, can take the train at 12.20 P. M., reaching Scranton at night in time to join the party for Carbondale. In the evening inspect the Westinghouse station and system of electric lighting.

Saturday, March 26th.—Leave Carbondale at 7 A. M. and Scranton at 8.30 for New York city.

Sunday, March 27th.—In New York city.

Monday, March 28th.—Go to Newark, by either the Pennsylvania or the Morris and Essex Railroad, about 8 A. M. At Newark, visit the United States Electric Lighting company's works, Mr. Edward Weston's laboratory, and, if time permits, the establishment of the Callendar Waterproofing and Insulating Company.

Evening.—Visit one of the United States company's electric lighting stations in New York.

Tuesday, March 29th.—Leave the Grand Central station, 42d street and 4th avenue, at 8 A. M. for Yonkers, inspecting Field's electric motors, and the Eickemeyer dynamo, leaving on the return at 11.30 A. M., and dining in New York.

P. M.—Visit the Stevens Institute of Technology, at Hoboken.

Wednesday, March 30th —The party will report at the Edison offices, 65 5th avenue, at 10 o'clock, and visit the various establishments and factories of the Edison company, and offices of the Electrical Accumulator Company.

Thursday, March 31st.—Visit the Western Union building, in New York city, in the morning, and the American Electric Manufacturing company's works in the afternoon, 163 West 13th street.

Friday, April 1st.—Leave the Grand Central station, at 9 A. M., for Ansonia via Bridgeport, Conn., to inspect the works of Messrs. Wallace & Sons. Returning, leave Ansonia at 3.25 P. M. and reach New York at 6 P. M., in time to reach Hoboken, and then take the night train for Ithaca at 7.15 P. M.

QUARTERLY REPORT OF THE WESTERN UNION TELEGRAPH COMPANY.

FOR THE QUARTER ENDING MARCH 31, 1887.

Executive Office,
Western Union Telegraph Co.,
New York, March 9, 1887.

The following statement will show the condition of the company at the close of the quarter ended December 31st, 1886:—

Surplus October 1st, 1886, as per last quarterly report		$5,324,261 98
Net revenues, quarter ended December 31st, 1886		991,018 00
		$6,315,279 98
From which deducting for—		
Interest on bonded debt	$123,469 70	
Sinking funds	20,000 00	
		$143,469 70
Left a surplus January 1st 1887, of		$6,171,810 28
The net revenues of the quarter ending March 31st instant, based upon nearly completed returns for January, partial returns for February, and estimating the business for March, will be about		$ 750,000 00
Add surplus, January 1st, as above		6,171,810 28
		$6,921,810 28
From which appropriating for—		
Interest on bonds	$123,470 00	
Sinking funds	20,000 00	$143,470 00
Leaves a balance of		$6,778,340 28

There has been a large increase over the corresponding quarter of the previous year, in the volume of business, and a handsome increase in gross revenues from the land line service, which was counterbalanced by loss of revenues from cable service and by increased expenses incident to the greater number of messages handled, and for extensive reconstructions.

The outlay for extensions, additional wires and for insulated wires, with a view of getting the wires off the poles in New York and Brooklyn, has been very large; and must continue for a time to absorb a large part of the net earnings.

The committee recommend that no dividend be declared.

Respectfully submitted,

NORVIN GREEN, *President.*

SUIT FOR INFRINGEMENT OF THE GAULARD AND GIBBS PATENT.

The Westinghouse Electric Company entered suit against the Sun Electric Company, of Portland, Me., March 15th, in the United States Circuit Court, at Boston. The suit is based upon alleged infringement by the defendant company in the State of Massachusetts, of the Gaulard & Gibbs' patent, of October 26, 1886, upon distribution by secondary generators. Order of notice was made returnable April 4th. The Sun Electric Company is alleged to be doing business in Woburn, Mass.

STORAGE BATTERY LITIGATION.

The Electrical Accumulator Company, of New York, has entered in the United States Circuit Court, at Cleveland, Ohio, two suits, which are practically one in aim, against the Brush Electric Company for alleged infringement of patent. The New York company sues upon patents of Camille A. Faure.

MANUFACTURING AND TRADE NOTES.

The Page Belting Co., Concord, N. H., send out, as a companion to their very handsome and complete catalogue, a pamphlet entitled "The Kinds and Grades of Belting to Use for Different Kinds of Work." Its contents should be very useful to purchasers of belts. The proper selection of belting, not only as to quality, but as to width and thickness, is often but illy considered in workshops. The information and suggestions of the Page Belting Co.'s pamphlet are clearly in the interest of efficiency and economy, and therefore to the advantage of purchasers. Their catalogue is supplemented by a comprehensive telegraph cypher code for the use of customers in ordering.

The Clark Dynamo is exhibited in practical operation at 508 West 14th street, New York, every afternoon from 3 to 5 o'clock. All who are interested in dynamo-electricity are invited to call and see it.

The B. F. Goodrich Co., Akron, Ohio, are manufacturing hard rubber goods, and announce their readiness to supply any specialties required in electrical work.

LEGAL NOTES.

U. S. COURT.—SOUTHERN DISTRICT OF NEW YORK.

SNYDER *et al* v. BUNNELL *et al.*

Decided November 11, 1886.

1. CONTRIBUTORY INFRINGEMENT.

When a person makes and puts on the market an article which of necessity and to the knowledge of such person is to be used for the purpose of infringing a patent, such person will be held liable under the doctrine of contributory infringement.

2. LIABILITY AS INFRINGER.

But the doctrine that a party may be held liable as an infringer solely because an article sold by him might be used by the purchaser as one element of a patented combination would be too dangerous to be upheld,

3. PROOF OF CONTRIBUTORY INFRINGEMENT.

In order to hold a party liable under the doctrine or contributory infringement, there must be proof that what he did was for the purpose and with the intent of aiding infringement. (*Saxe* v. *Hammond*, 1 Holmes, 456.)

Mr. G. G. Frelinghuysen and *Mr. A. C. Farnham*, for the complainants.

Mr. H. H. Morse and *Mr. C. C. Leeds*, for the defendants.

COXE, *J.*:

The defendants are charged with infringement of letters patent No. 103,383, granted to James P. Snyder for an improvement in electro-magnetic burglar alarm apparatus. The invention consists in an arrangement for setting in action automatically a secondary circuit, which will continue the alarm, although the circuit first set in action may be suddenly stopped again by the shutting of the door or window.

The claim is as follows:—

An alarm indicator arranged for automatically causing a secondary and independent circuit at the indicators by the action of the armature lever with a disc or other device, and the springs or other closing device, and a secondary line of wire, 1 B^2, connecting the battery and the magnet, all substantially as specified.

The evidence of infringement is confined to the sale by the defendants on the 17th of December, 1884, of one instrument, known as an "automatic drop," and the admission by one of the defendants that others like it had been sold by his firm.

It is conceded that this instrument may be used in connection with the other apparatus described in the patent so as to constitute an infringement. It is also conceded that it is susceptible of a perfectly innocent use. There is no proof that the defendants have ever used it in an infringing combination. There is, indeed, no direct proof that it was ever so used by any one. Certainly there is nothing to indicate that the defendants have sold an automatic drop, knowing that it was intended to be used to infringe the patent. For aught that appears, every instrument sold by them may have been used in a perfectly legitimate manner.

If the defendants were doing what the complainants charge—

Digitized by Google

namely "making and putting on the market an article which, of necessity, to their knowledge, is to be used for the purpose of infringing the complainants' patent" there would be little difficulty in holding that the complainants' rights are invaded. But it is thought that the evidence will not warrant so broad an accusation. If held liable for selling an automatic drop, it might with plausibility be urged that they are equally inculpated by the sale of a galvanic battery or an electric bell, for these are necessary adjuncts to the patented combination.

The complainants invoke the doctrine of contributory infringement, the clearest illustration of which is, perhaps, found in *Wallace* v. *Holmes* (9 Blatchf., 65). In that case the complainants had a patent for a burner in combination with a chimney. The defendants manufactured and sold the burner, leaving the purchaser to supply the chimney, without which the burner was useless. The burner could not be used without infringing the patent. All this the defendants knew. It was because of this use and this knowledge that they were held liable. (See, also, *Richardson* v. *Noyes*, 10 O. G., 501; *Bowker* v. *Dows*, 3 Ban. & A., 518: *Alabastine Co.* v. *Payne*, 27 Fed. Rep., 559; *Travers* v. *Beyer*, 26 Fed. Rep., 450; *Cotton Tie Co.* v. *Simmons*, 106 U. S. 89 S. C., 1 Sup. Ct. Rep., 52.)

In each of these cases the complainants succeeded because the article dealt in by the defendant was only useful when combined as provided by the patent in question, and was sold by him intending that it should be put to this unlawful use. A careful examination has failed to discover an authority holding a party liable as an infringer solely because an article sold by him might be used by the purchaser as one element of a patented combination. Such a doctrine would be too dangerous to be upheld. The case most nearly approximating the one in hand is *Saxe* v. *Hammond* (1 Holmes, 456), Judge Shepley there says:

> As defendants only make one element of the patented invention, in order to hold them guilty I must find proof connecting them with the infringement. Different parties may all infringe by respectively making or selling, each of them, one of the elements of a patented combination, provided those separate elements are made for the purpose and with the intent of being combined by the party having no right to combine them. But the mere manufacture of a separate element of a patented combination, unless such manufacture be proved to have been conducted for the purpose and with the intent of aiding infringement, is not in and of itself infringement.

The record upon this branch of the case is too vague and uncertain to uphold the charge of infringement. Where a necessary link is absent in the chain of evidence, it cannot be supplied by mere suspicion.

The bill is dismissed.

INVENTORS' RECORD.

Prepared expressly for THE ELECTRICIAN AND ELECTRICAL ENGINEER, *by* Pope, Edgecomb & Terry, *Solicitors of Patents for Electrical Inventions*, 11 *Wall Street, New York city.*

CLASSIFIED LIST OF UNITED STATES ELECTRICAL PATENTS.

From February 15 to March 8th, 1887 (inclusive).

Alarms and Signals:—*Electric Burglar Alarm*, E. E. Carr, 357,815. *Electric Alarm and Signal Bell*, S. H. Short, 357,865. *Electric Fire Alarm*, W. L. Horne, 357,960. *Speaking Tube*, A. S. Fontaine, 357,589. *Electrical Signal Device*, W. Hand, M. C. Wright and F. A. Polock, 357,922, February 15. *Fire Telegraph*, J. H. Guest, 358,393. *Electric Push-Button*, A. G. Davis, 358,109. *Electrical Gas Alarm*, W. McVay, 358,161. *Electrical Mail-Indicator*, V. A. Krepps, 358,360. *Electro-Magnetic Thermoscope*, H. J. Haight, 358,350, February 22. *Thermostat*, E. W. Upton, 358,511. J. L. Campbell, 358,728. *Extension Table Call-Bell*, J. E. Johnson, 358,614. *Electric Station Indicating Apparatus*, W. L. Bundy, 358,645. *Shoal Water Alarm*, L. Frik, 358,655. *Transmitting Signal Instrument*, F. Pearce and J. Jones, 358,694, March 1. *Self-Signaling and Self-Recording Electro Magnetic Thermoscope*, H. J. Haight, 358,854. *Fire-Alarm*, F. G. Lyon, 358,864. *Electric Bell*, E. A. Wildt, 358,910. *Apparatus for Detecting Leaks in Gas Pipes*, W. W. Stern, 358,949. *Annunciator*, A. D. Blodgett, 359,051. *Electro-Magnetic Transmitting and Distributing Thermoscope*, H. J. Haight, 359,210, March 8.

Clocks:—*Electric Clock System*, T. J. Zoeller, 357,885, February 15.

Conductors, Insulators, Supports and Systems:—*Manner of Making and Cooling Joints for Electrical Conduits*, B. Williams, 358,095. *Cable Hanger*, J. A. Barrett, 358,140. *Subway Structure for City Streets*, F. N. Blanc, 358,311, February 22. *Insulating Tube for Electric Conductors*, C. L. Clarke, 358,592. *Electric Conduit*, R. L. Harris, 358,609. *Duct-Conduit for Electrical Conductors*, G. D. Holt and W. T. McGinty, 358,778, March 1.

Dynamos and Motors:—*Dynamo-Electric Generator*, J. W. Easton, 357,705, February 15. *Transmitting Gear for Electric Motors*, W. H. Knight, 358,043. *Regulator for Dynamo-Electric Machines*, F. V. Y. Graells, 358,133. *Dynamo-Electric Machine*, R. Eickemeyer, 358,340, February 22. *Electric Motor*, M. W. Long, 358,682. *Method and Apparatus for Synchronizing and Regulating the Movements of Motors*, J. H. Rogers, 358,753, March 1. *Electric Regulator*, O. B. Shallenberger, 359,101. *Armature and Process of and Apparatus for Forming the Same*, C. G. Curtis, S. S. Wheeler and F. B. Crocker, 359,205, March 8. *Oiler and Wiper for Commutators*, J. Snowberger, re-issue, 10,816, March 8.

Galvanic Batteries:—*Galvanic Battery*, W. H. Tasker and T. J. Jones, 358,087, February 22; J. B. Perreur-Lloyd, 358,464, March 1; H. J. Brewer, 359,055, L. A. W. Desruelles, 359,063, March 8. *Galvanic Cell*, W. Frishmuth, 358,030 and 358,031. *Voltaic Battery*, T. J. Jones, 358,120. *Electric Battery*, S. S. Wheeler and C. G. Curtis, 358,314 and 358,386, February 22. *Manufacture of Plates or Elements for Voltaic Batteries*, W. H. Tasker, and T. J. Jones, 357,642. *Galvanic Battery and Apparatus Connected Therewith*, A. Rene and C. W. Pridham, 357,646, February 15. *Manufacture of Plates or Elements for Voltaic Batteries*, D. J. Fitz-Gerald, 358,111. *Electric Battery Jar*, C. G. Curtis and F. B. Crocker, 358,019, February 22.

Ignition:—*Electric Gas-Lighting Apparatus*, C. B. Bosworth, 359,053, March 8.

Lamps and Appurtenances:—*Arc Lamp*, V. Klan and F. Spurny, 357,774, February 15; W. A. Crowdus and H. M. Sutton, 358,145, February 22; H. C. McDill and J. E. Gaston, 359,221, March 8. *Incandescent Lamp*, T. A. Edison, 358,599 and 358,600, March 1. *Electric Lighting System*, J. E. H. Gordon, 358,346. *Switch Board for Electric Light Systems*, G. H. Warde, 358,309. *Pump for Producing High Vacua*, E. Thomson, 358,131, February 22. *Sealing-in of Wires for Incandescent Lamps*, M. M. M. Slattery, 358,492, March 1.

Metallurgy:—*Electric Amalgamator*, T. H. Trauernicht, 358,002, February 15. *Electro-Magnetic Ore Separator*, G. W. Mansfield, 359,085, March 8.

Miscellaneous:—*Electric Heater*, W. L. Burton, 357,572. *Sanitary Galvanic Appliance*, P. H. Vander Weyde, 357,647. *Obtaining Chlorine by Electrolysis*, D. G. Fitz Gerald, 357,659. *Electric Temperature Regulator*, C. E. Lee, 357,838, February 15. *Time Check Apparatus*, J. S. Goldsmith, 358,032. *Electrical Pumping Apparatus*, M. A. and A. Michales, 358,053. *Machine for Straightening Rails*, A. J Gustin, 358,116. *Automatic Fire Extinguishing Apparatus*, E. T. Copeland, 358,336. *Armature for Electro-Magnets*, C. A. Gaiser, 358,343. *Induction Coil*, M. M. M. Slattery, 358,415. *Electrical Door Opener*, L. P. Summers, 358,417, February 22. *Regulator for Induction Coils*, M. M. M. Slattery, 358,493. *Binding Post*, G. Westinghouse, Jr., 358,518. *Electric Fluid-Pressure Engine*, same, 358,520. *Electrically-Actuated Fluid-Pressure Motor*, same, 358,521. *Electrically-Actuated Fluid-Pressure Motor and Circuits Therefor*, same, 358,713. *Electrical Apparatus for Operating Valves in Mains*, F. B. Page, 358,775. *Automatic Electric Fluid Regulator*, R. C. Page and F. H. Soden, 358,691. *Induction Coil*, M. M. M. Slattery, 358,793. *Automatic Mechanism for Straightening Railroad Rails, &c.*, A. J. Gustin, 358,810, March 1. *Automatic Valve for Regulating Fluid Pressure*, A. P. Massey, 358,866. *Machine for Separating Iron Tacks or Nails from Particles of Tin or Zinc*, A. E. Convers, 358,961. *Electric Bolt-Releasing Device*, G. L. Henzel, 358,975. *Electric Switch Register*, C. Fearon, 359,067, March 8. *Electrical Circuit*, J. F. Mehren, 357,726. *Device for Regulating the Flow of Electric Currents*, E. T. Starr, 357,873, February 15.

Railways and Appliances:—*Electric Railway*, E. M. Bentley, 359,050, March 8. *Suspended Conductor for Electric Railways*, C. J. Van Depoele, 359,512, March 1. *Electric Railway Signal*, E. D. Wells, 357,881. *Car-Brake*, G. F. Card, 357,976. *Electro-Magnetic Brake*, same, 357,576. *Circuit System for Electric Brakes*, same, 357,760, February 15. *Electro-Pneumatic Interlocking Apparatus*, G. Westinghouse, Jr., 358,519, March 1. *Electric Railway Signal*, C. D. Tisdale, 359,040, March 8.

Secondary Batteries:—*Cut-Out for Secondary Batteries*, G. B. Prescott, Jr., 357,627, February 15. *Secondary Electric Battery*, J. T. Van Gestel, 358,092. *Electrical Accumulator or Storage Battery*, C. P. Elieson, 358,341, February 22. *Secondary Battery*, W. W. Griscom, 359,072, March 8.

Telegraphs:—*Telegraphy*, R. G. Brown, 358,379, February 22: C. Selden, 358,890, March 8. *Telegraph Sounder*, R. C. Rutherford, 357,789, February 15. *Stock Indicator*, A. B. Smith, 358,896. *Telephone and Telegraph*, N. F. Palmer, 358,939, March 8.

Telephones, Systems and Apparatus:—*Telephone*, W. D. House, 358,812, March 1; N. F. Palmer, 358,940, March 8. *Telephone Transmitter*, N. F. Palmer, 358,941; J. H. Tabony, 359,188, March 8. *Telephone Switch*, J. W. McDonough and H. H. Eldred, 357,682. *Desk for Telephone Use*, C. A. Patterson, 357,687. *Multiple Switch-Board*, W. S. Ford, 357,821, February 15. *Telephone Annunciator*, J. A. Barrett, 358,250. *Telephone Exchange System*, G. L. Wiley, 358,317, February 22. *Mechanical Telephone*, C. M. Radford, 357,967; J. H. Howard, 357,995, February 15; J. S. Jones, 358,357, February 22; G. W. Lord, 359,215, 359,216, and 359,217. *Mechanical Telephone Line*, same, 359,218, March 8. *Telephone and Telegraph*, see *Telegraphs*.

OKONITE

TRADE MARK.

CHAS. A. CHEEVER, Pres. WILLARD L. CANDEE, Treas.

The Okonite Company,

MANUFACTURERS OF

Underground, Aerial and Submarine

Insulated Wires and Cables,

No. 13 Park Row, New York.

MITCHELL, VANCE & CO.,

GAS FIXTURE MANUFACTURERS,

Have added a department for the Manufacture of **Electroliers** and other fixtures adaptable to any system of **Incandescent Electric Lighting,** also Combination Fixtures for both Gas and Electric Light.

Estimates and designs furnished upon application.

836 and 838 BROADWAY,

NEW YORK.

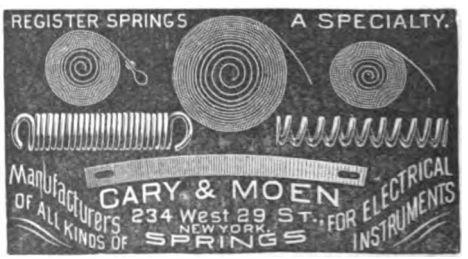

WANTED.

A gentleman well versed in Electricity desires a situation as Assistant Electrician.

Address, LAWRENCE ZIMMERMANN,

326 Manhattan Ave., Brooklyn, N. Y.

Digitized by Google

THE ELECTRICIAN
AND
ELECTRICAL ENGINEER.

Conducted by F. L. POPE. G. M. PHELPS, JR., Associate Editor.

PUBLISHED MONTHLY BY

THE ELECTRICAL PUBLISHING CO.,
115 Nassau Street, New York city.

European Agent, F. H. WEBB, 4, The Sanctuary, Westminster London, S.W., Eng

TERMS OF SUBSCRIPTION.

United States and Canada,	per annum,	$3.00
Four or more Copies, in Clubs (each)	"	2.50
One Copy, Four Months,		1.00
Great Britain and other Foreign Countries within the Postal Union	"	4.00
Single Copies,		.25

[*Entered at the Post Office at New York, N. Y., as second class mail matter.*]

EDITORIAL ANNOUNCEMENTS.

Addresses.—*Business letters should be addressed and drafts, checks and post-office orders made payable to the order of the* ELECTRICAL PUBLISHING CO. *Communications for the attention of the editors should be addressed,* EDITOR OF THE ELECTRICIAN AND ELECTRICAL ENGINEER, 115 *Nassau Street, New York city.*

Communications *suitable for our columns will be welcomed from any quarter. Discussions of subjects relating to all branches of electro-technical work, by persons practically acquainted with them, are especially desired. Unavailable and rejected manuscripts will be returned only when accompanied by the necessary postage.*

Advertisements.—*We can entertain no proposition to publish anything for pay, or in consideration of advertising patronage, except in our advertising columns. Our editorial columns will express our own opinions only, and we shall present in other columns only such matter as we consider of interest or value to our readers*

NEW YORK, MAY, 1887.

TELEPHONE PROFITS.

IT was once jocosely remarked by a prominent inventor, that he knew of nothing equal to the storage battery as a means of developing a man's latent capacity for lying. If, instead of storage battery he had said telephone, we think that most persons familiar with the subject would be inclined to agree with him. The bill lately under consideration at Albany, for reducing the charge for telephone rentals in the state of New York, has given rise to the usual amount of unintelligent discussion, and of incoherent animadversion against the owners of the Bell telephone patents as a set of conscienceless and grasping monopolists. For example, a prominent New York journal states that it was shown at the hearing that "the American Bell Telephone Company owns the majority of the stock of all the profitable telephone companies in the state, 35 per cent. of the stock of the unprofitable companies, and receives $14 per annum from each instrument in use by all companies." The idea has been sedulously inculcated by many of the newspapers, that by far the greater portion of the total amount paid by the public for telephone service finds its way into the coffers of the parent company in the shape of patent royalties, and in this manner much adverse public opinion has been manufactured by interested parties.

These assertions, however, are by no means borne out by the facts in the case, which are accessible to any one who cares to investigate them. The seventh annual report of the American Bell company for the year ending December 31st, 1886, shows the following statements of receipts from all sources.

Rentals of telephones	$2,109,492.44
Dividends from local companies	844,555.76
All other sources	142,952.71
Total gross receipts	$3,097,000.91
Dividends paid during the year	$1,568,336.00

Number of telephones under rental, 353,518.

From this statement it appears that the average gross receipts from all sources, per telephone, is $8.56 ; that the average amount of rental per pair of telephones paid by the licensees, is $11.92, or $5.96 per instrument, and that the average amount of dividends paid by all local companies to the parent company, per telephone, is $2.39. The dividends paid by the parent company, average $8.86 for each pair of telephones under rental.

It is well known to all familiar with the telephone business, that by far the greater part of the gross receipts of the local companies is paid out for local labor, particularly for attendance at the central station, and for the repair and maintenance of lines. The Central Union company, which covers several prosperous states in the central portion of the Union, and which may, therefore, be regarded as a fair representative of the average conditions obtaining in the public telephone service, has not proved an exceptionally profitable investment. It usually paid dividends of six per cent. per annum, until the troubles in Indiana, resulting from the passage of a bill by the legislature similar to that which failed to pass in the state of New York, reduced the receipts in that state to a point which not only left no profit, but entailed a loss to be made up on the remaining territory, since which time the dividends of the company have been reduced to four per cent. Clearly the figures which we have given, by no means indicate that the public is overcharged for the benefit it receives from the telephone, considering the actual cost of maintaining the service in an efficient condition.

THE MAY MEETING OF THE INSTITUTE OF ELECTRICAL ENGINEERS.

THE Annual Meeting of the American Institute of Electrical Engineers will be held May 17th and 18th, at the house of the Society of Civil Engineers, New York.

The election of officers will take place at the evening session, May 17th. Morning and afternoon sessions will be held on the 18th, devoted chiefly to the reading of papers and discussion. At this writing the following papers are arranged for: "Novel Phenomena of Alternating Currents," by Professor Elihu Thomson. "Storage Batteries in Practice," by E. P. Roberts, of Cheyenne. "The Proper and Improper Construction of an Electric Light Plant," by J. A. Powers, of Troy. "Electric Lighting of Railway Coaches," by T. C. Martin and J. Wetzler, of New York. "A Universal Wire Gauge, by the committee of the Institute on that subject, Capt. O. E. Michaelis, chairman. "Hard-Drawn Copper Wire for Telegraph Lines," by Wm. Maver, Jr., New York. Papers are expected from Professor W. A. Anthony, of Cornell University and David Brooks, of Philadelphia, of which the subjects are not yet announced. The

Digitized by Google

meeting promises to be one of great interest. The topics announced above comprise matters that almost daily engage the attention of practicing and consulting electrical engineers at this time, and it is quite certain that the contributions whose titles are not yet announced will prove of equal significance. A large attendance of members as well as of others interested in electrical work is expected.

READERS of the *Journal of the Society of Telegraph Engineers and Electricians* (London), No. 65, Vol. xvi., will be grieved, as we have been, to note the ominous employment of rather tart and caustic personal comment in a scientific discussion before that body. The use of personal contumely, as a polemical weapon in technical debate, has heretofore, happily, been confined chiefly to theological controversies; although it was resorted to with much ferocity in the philological field during the memorable combat between Dr. Fitz Edward Hall, of the British Museum, and the late Richard Grant White, some dozen years ago, over the proper use of a few common English words. The electricians fell foul of each other upon so impersonal a topic as the theory of long-distance telephony. All will admit that occasions not infrequently arise in the *use* of telephones, over long or short distances, when weak human nature may be forgiven a moderate use of strong language; but it is difficult to discern any incitement to mutual hostility in a technical argument concerning "static capacity," "induction," "environment," etc. We are glad to be able to say that in their heated dispute Prof. Thompson and Mr. Preece, stopped far short of the billingsgate of the famous Hall-White quarrel; but we think they went sufficiently far in that direction to justify us in calling their attention to the comment of an American poet upon the results of a somewhat heated discussion in a western scientific society, to wit:

> Now I hold it is not decent for a scientific gent
> To say another is an ass,—at least to all intent;
> Nor should the individual who happens to be meant
> Reply by heaving rocks at him, to any great extent.

MEASURES for statutory regulation of the charges for telephone service have been before the Legislatures of several States during the past season, but with small success. The bill presented at Albany had a full consideration in committee. The committee investigated the subject at considerable length, having before it on several occasions representatives of the telephone companies doing business in the State as well as advocates of the measure. The telephone officials were closely questioned by the committee on facts and figures. The proposed bill was adversely reported. The matter will hardly come up again at the present session of the Legislature.

The effort to secure the repeal in Indiana of the statute regulating telephone charges after a sufficient experience of the inconvenience arising from its working, had the support of a large part of the business community; the bill passed the lower house, and would doubtless have passed the Senate, but for the wrangle over the lieutenant-governorship, which left the senators no time for anything but "politics" till the statutory limit of the session was reached.

Quite aside from the question of whether the compulsory reduction of existing rates of charge for telephone service would benefit the public—and the experience of Indiana indicates a negative—a far-reaching principle is involved in any state regulation, to which renewed attention is called in the following paragraph from the N. Y. *Evening Post*, referring to the bill at Albany:

> Any such measure is a clear violation of the patent laws of the United States, whose intent and meaning now and always have been to give to the inventor the sole and exclusive use of his invention for a limited number of years, as an inducement to further inventions and improvements, whereby civilization is advanced and human comfort and convenience are promoted and increased. This is one of the principles evolved by society in the course of ages as the most salutary for itself, and accordingly grounded in the statutes of all modern states. In the eye of the law it makes no difference whether the inventor and his assigns make much or little money during their limited time. Nobody is compelled to pay them anything. Those who do not consider a telephone instrument worth $75 per year (or $7,500, if the company choose to ask that sum) can leave it alone. Now, if the time has come for changing the principles of patent law, let them be changed by the only authority competent to undertake that task. The Constitution of the United States has expressly committed that class of subjects to Congress. Any meddling with it by State Legislatures is impertinent and revolutionary. We are not unmindful of the fact that a subordinate court in Indiana has come to a different conclusion.

THE feasibility and advantages of a union of gas and electric lighting interests are receiving increased attention and discussion on all sides. We are glad to reprint elsewhere (page 192) the paper read by Mr. George W. Graeff, Jr., of Philadelphia, at the third annual meeting of the Ohio Gas Light Association. Mr. Graeff treats his topic—"Gas and Electricity—Two Interests or One?"—comprehensively and forcibly, presenting considerations in favor of the suggested union that should appeal strongly to the financial interests of the owners of gas stocks. The question has passed the stage of discussion in many places, and has reached that of experiment. Our exchanges furnish a constantly increasing list of gas companies that have established or contracted for electric light plants.

COMPETITION in rates with the Western Union Telegraph Co. has now reached Pacific coast business. The daily journals of April 30th announce a rate of $1 for ten words between the East and the far West, made by the Postal Telegraph Co. in union with the Baltimore and Ohio Co. and the United Lines Co. Reduced rates for telegraphic money transfers are also announced.

THE electric subway bill, now before the Pennsylvania legislature, described in our Philadelphia letter, would doubtless prove a very satisfactory measure to corporations fortunate enough to secure grants under it if enacted. As described by our correspondent, it gives subway companies an unrestricted use of streets and highways, and gives little or no consideration to city, borough or private interests. It seems unlikely that the bill will be permitted to pass in its present shape.

THE public will not readily credit with disinterested zeal for the public welfare the politicians and others at Albany who are endeavoring to exclude the Comptroller and the Commissioner of Public Works from the proposed re-organized Subway Commission. Gen. Newton, not only as Commissioner of Public Works, but on account of his character, his attainments as an engineer, and his acquaintance with electrical work, is perhaps the one man in the municipal administration who can best serve the city's interests on the Commission.

WE take pleasure in mailing to subscribers the Tables of Equivalents of Measurement, prepared by Mr. Carl Hering, and published in our present issue, printed on a single sheet for the convenience of electrical engineers, and others who may have occasion to use such a table. We shall be pleased to supply copies upon application, to all who desire them.

Digitized by Google

ARTICLES.

THE SO-CALLED "DEAD WIRE" ON GRAMME ARMATURES.

BY CARL HERING.

THE question whether the wire on the inside of the Gramme ring armature and on the ends of a cylinder armature, is active or inactive, has been discussed at great length in the last few years, but apparently without leading to any definite and indisputable conclusions. Recent publications show that some authorities still appear to believe that for some theoretical reasons the wire on the inside of a Gramme ring is as active as that on the outside. The writer has therefore made a simple and conclusive experiment which appears to prove beyond question, whether this wire is active or inactive.

The question is not one which is of interest merely from a theoretical point of view, but it bears directly on important points in the construction of machines, such for instance as placing a magnet in the inside of a Gramme ring, or making a cylinder armature of square section instead of oblong.

The two theories which explain the generation of electromotive force by moving a wire near a magnet, may be briefly summarized as follows: If a loop of wire, *a b c d* in figure 1, be revolved about its axis in a magnetic field

Fig. 1

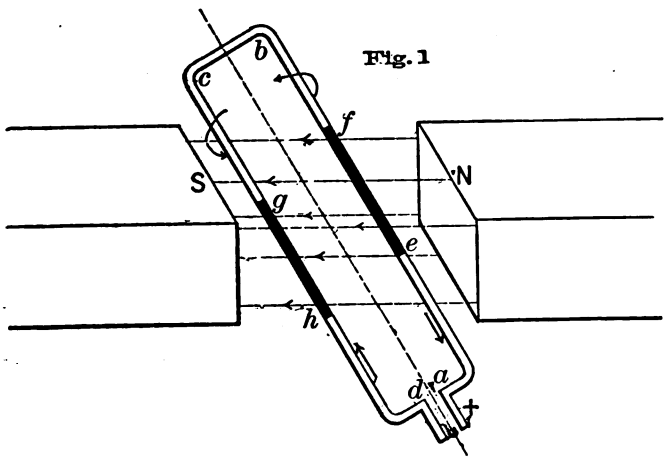

between two opposite poles, an electromotive force will be generated in the direction as shown. The first and older theory, sometimes termed the theory of threading lines of force through a loop, explains the induction of an electromotive force, by saying that the number of lines of force which pass through this revolving loop is always either increasing or decreasing, and that this increase or decrease in the number of lines of force threaded through the loop generates electromotive force. According to the second and newer theory, generally termed the theory of cutting lines of force, an electromotive force is generated when a wire cuts lines of force; the induction therefore takes place in the two parts *e f* and *g h* of the loop *a b c d*, and only in those parts, as the remainder of the loop does not cut lines of force.

It will be seen that these theories, as stated, do not conflict, both may be, and undoubtedly are, correct as far as they go. The second theory is, however, by far the more satisfactory as it tells us precisely where the induction takes place, and where we must endeavor to place the wire of a loop or coil in order to render it active. The first theory, referring only to the loop in general, leaves us to believe that the loop must be considered as a whole, and that, therefore, all parts of the wire forming the loop are of equal importance in the generation of electromotive force, that is, they are all equally active. The theory does not state, directly, that all parts of the loop are equally active, but it leaves one to infer that this is the case; it is this interpretation of the theory which, it is claimed, proves that that part of the wire which is on the inside of the Gramme ring and on the ends of a cylinder armature is as active in the generation of electromotive force as the other parts of it.

This interpretation of the older theory necessarily conflicts with the theory of cutting lines of force; both cannot be correct. We believe that the older theory is generally interpreted in this way; if not, and if the induction is not the same in all parts of the loop, then the theory is not sufficiently complete or exact to enable us to properly design dynamos, as it does not tell us where the induction does take place. According to the older theory it is the loop *a b c d* as a whole, which generates the electromotive force, the theory does not tell us what parts, if any, of the loops are superfluous. On the other hand, the second theory states that the induction takes place in the parts *e f* and *g h*, and that the rest of the loop is useless as an inductor, it serves merely as a conductor or collector of the currents, and should, therefore, be made as short as possible.

In order to prove conclusively which of these two conflicting statements is wrong, without the use of any abstruse theoretical deductions, the writer made the following simple experiment with a view, more particularly, of finding out whether the wire on the inside of a Gramme ring was active in generating electromotive force, or whether it was mere dead resistance, acting only as a conductor.

The core of a Gramme ring was wound with a number of coils, each one consisting of only one turn of a wire, as shown in figure 2, in which R R is the core of the ring,

Fig. 2

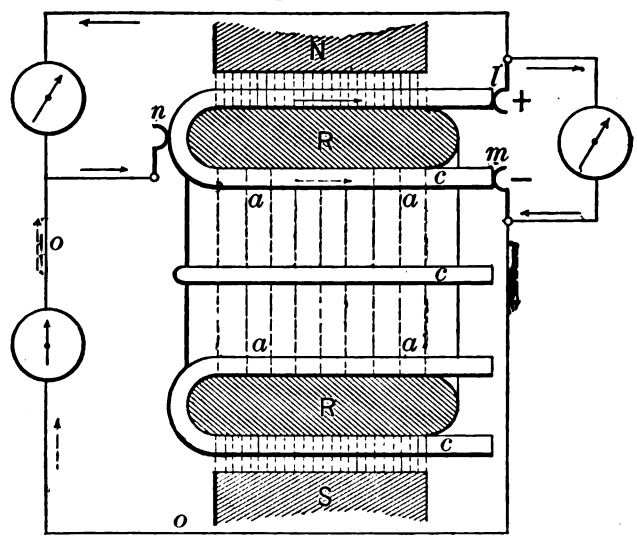

shown in vertical cross-section; N, S, are the two poles of the field, and *c*, *c*, *c*, are three of the coils. Each coil consisting of one turn, is insulated from all the others and has its two ends, *l*, *m*, bare and not connected with any of the others; each coil has its insulation scraped off at the bend *n*. Three fixed brushes, *l*, *m*, *n*, were fastened to the frame of the machine so as to touch these three parts of each coil as it passed by them. The field was excited by another machine and the armature was made to revolve rapidly. In applying a test galvanometer to the brushes *l*, and *m*, as shown, there was a strong current flowing in the direction indicated, showing the action of one coil of a simple Gramme armature. In order to find out whether this induction took place equally in all parts of the loop or coil *l n m*, according to the older theory, or whether it took place only in that part *l n* which cuts lines of force, the test galvanometer was placed first between

Digitized by Google

the brushes *l* and *n*, indicating a current, as shown, in the same direction as before, the current indicated by it being in this case only that which was generated in the half of the loop *l n*, the other brush *m* having first been removed. The brush *l* was then removed and the galvanometer placed between the brushes *m* and *n*, in which case it indicated no current whatsoever, showing conclusively that there was no electromotive force generated by that portion (*m n*) of the loop which was in the inside of the ring. According to the older theory it ought to assist in generating the electromotive force manifested at *l* and *m*, as it forms part of the loop *l n m* through which the lines of force are threaded from the pole-piece N to the core R. The experiment, however, showed conclusively that it did not generate electromotive force, that all the current which flowed from *l* to *m* through the galvanometer was generated in the part *n l*, the other part, *n m*, acting merely as a dead resistance to conduct the current from the end *n* of the active wire to the brush *m*. According to the newer theory the part *l n* is the only portion of the loop which cuts lines of force, and should, therefore, be the only one in which induction takes place,—which the experiment has shown to be the case. The part *m n* being shielded from the magnetism by the iron R, does not cut lines of force and is, therefore, dead resistance. This, therefore, applies equally well to the wire at the ends of cylinder armatures.

This shows conclusively the correctness of the theory of cutting lines of force and the fallacy of the older theory as interpreted above. But aside from theories, it shows that, as there is no induction in the part *m n*, it is preferable to dispense with it if practicable, for instance, by bringing it around on the outside of the ring on the opposite side, thus making a cylinder armature of it, or by rendering it active by creating a field in the inside of the ring with an additional pair of pole pieces and magnets. The experiment also shows that if it were not for other reasons the best form for a cylinder armature, as far as relates to dead wire, would be to have it very long, and very small in diameter.

A second experiment was then made to still further prove the correctness of the theory of cutting lines of force. The field was made very intense so as to oversaturate the core R R, thus causing some lines of force, *a a*, to leak through the air space in the inside of the ring; such conditions no doubt often exist in Gramme armatures, the iron in the core of the ring being frequently much too small in cross-section. In again applying the test galvanometer at *l* and *m*, or at *l* and *n*, the same results as before were obtained, but on connecting it with *m* and *n*, it indicated a current in the direction shown by the dotted arrows, which is in the *reverse* direction, around the coil, to that induced in *n l*, and therefore tends to neutralize it. This is readily explained by the newer theory, as the wire *m n* cuts the lines of force *a a* and, therefore, must generate a current in the direction shown. The older theory seems to fail completely to account for this current, for, according to that theory it ought to be in the other direction. The only way to account for the current by this theory, appears to be to consider the loop as being formed by the wire *m n* and the test galvanometer circuit. But this fails to explain why the difference of potential exists at *m* and *n* when there is no galvanometer circuit, a fact which can readily be proven.

As the wire on the inside is thus shown to be dead, it might be inferred that the advantage of placing a second pole-piece and magnet in the inside would be very great, doubling the number of volts generated, as it doubles the active length of wire. But this is by no means the case, provided the machines are in both cases well proportioned. The reason is as follows. For the same armature, the number of volts generated depends only on the total number of lines of force cut, provided the speed is the same. If the armature core is saturated by the ordinary form of pole pieces, it is not possible to economically increase to any great extent the number of lines of force which enter it; a second pole-piece may be placed in the interior and will distribute the field over a larger surface of the armature, but it cannot add much more magnetism because the core, being already saturated, cannot be forced to take many more lines of force. It therefore appears that any such gain due to interior pole pieces would be limited to the cases when the armature core is not saturated by the external pole pieces. But there is apparently no reason why this case should occur, as it is always possible to saturate the small cross-section of the ring by the large pole pieces on the outside.

We are informed by good authority that the theory of cutting lines of force assumes that the number of lines of force which follow the ring from pole to pole is proportional to the area exposed to the pole pieces. We are unable however to find anywhere, such a statement as a part of this theory; on the contrary it can readily be proved that this general assumption is not correct in many cases. As long as the iron of the ring is below saturation then it is true that the induction will increase about in the same proportion as an increase in the size of the pole-piece area, provided the intensity per square inch remains the same, for it is evident that in this case the total number of lines of force, that is, the capacity of the magnets, will have to be increased proportionally. But as soon as the ring is saturated, then an increase in the size of the pole pieces (of the same intensity per square inch) will no longer increase the number of lines of force proportionally. In this case, which is the more common, the above assumption is, therefore, not correct. It is understood, of course, that if the area of the pole pieces of the same intensity be doubled for instance, the capacity of the magnets for generating the magnetism must be doubled, as there are then twice as many lines of force.

This subject of interior pole pieces was referred to in some of the writer's earlier articles[1] in which it was shown that the electromotive force will be increased proportionally with an increase in the number of lines of force passing into the core, and that these lines of force may be increased by increasing the size of the pole-piece surface of the same intensity, provided the iron in the magnetic circuit is not oversaturated, in other words if the cross-section of the iron (including the core of the armature) be increased in proportion to the number of lines of force. For instance, suppose the cross-section of the core of the armature to be doubled, and the number of lines of force entering it be doubled either by doubling the area of pole pieces of the same intensity, or by doubling the intensity and keeping the area the same, then it is evident that if the speed with which the wire passes through the field remains the same, the induction in volts will be twice as great, and as the wire is not necessarily doubled in length the induction in volts per foot will be greater than it was before.

As the small core of a Gramme ring can generally be saturated by pole pieces on the outside, the advantage of interior pole pieces must not be looked for in this direction. The chief gain seems to be in increasing the area of the non-magnetic space between the pole pieces and the armature core, and thereby diminishing materially the great magnetic resistance which this space offers to the lines of force. According to S. P. Thompson,[1] the magnetic resistance of air may be 20,000 times that of the iron, which, if correct, will show the great importance of making the magnetic resistance of this space as small as possible by increasing its area and diminishing its depth or thickness. Kapp[2] states that the magnetic resistances of air and iron (at low magnetization) are as 1440 to 2. Although this is much lower than the figure given by Thompson, it shows that it is highly improbable that it may happen that the resistance of the air space between the pole and the

1. Electrician and Electrical Engineer, 1886, pp. 301 and 369.
2. Proceedings of Society of Telegraph Engineers and Electricians, Nov. 11, 1886.

Digitized by Google

armature ring will be much less than that of the ring itself, except perhaps in abnormally proportioned machines with a very small amount or a poor quality of iron in the ring. In such poorly designed machines the advantage of interior pole pieces would be less.

This advantage of interior pole pieces, therefore, lies in the economy of the magnetism, but as this magnetism requires for its generation only from 2 to 10% of the total energy of the machine, this advantage is merely in the reduction of this small fraction.

There is a disadvantage in having an interior pole-piece which in some cases may be so great as to more than outweigh the advantages. The speed of the wire on the inside is necessarily less than that on the outside; with small thick rings this difference is very great being sometimes as great as 40 to 50%. In that case if the interior pole-piece merely re-distributes lines of force by taking some from the outside surface and leading them into the ring on the inside surface, it is evident that it will do more harm than good, as many of the lines of force will then be cut at a less speed, and therefore generate less potential.

Another disadvantage lies in the fact that the two interior pole pieces may, in the case of smaller rings, be quite near to the iron or steel shaft, in which case many of the lines of force will leak directly across from one to the other through the shaft, and as these are not cut by the wire on the armature, they are wasted.

One way of rendering the inside wire active is to place a short thick fixed magnet in the inside of the ring, the poles of which are of like polarity to those on the outside. With such a machine the following experiment might at first appear to be a convincing illustration of the great advantage of such an interior magnet, but upon closer examination the apparent advantage will be found to have been due to other causes. Let the machine be run with both external and internal magnets excited and let its output be measured. Then let another test be made but without exciting the interior magnet; it will be found to generate very much less electrical energy; thus apparently showing an advantage in favor of the interior magnet. But it will be noticed that when the interior magnet is not excited many of the lines of force from the external magnets will pass directly across the ring and through this dead magnet, which then acts as a sort of magnetic short circuit to the poles of the ring; many of the lines of force will then no longer be threaded through the coils on the ring, which will therefore generate much less potential. Or, according to the other theory, the wire on the inside will then cut lines of force which have the wrong direction, and will therefore generate a potential in the *reverse* or opposing direction similarly to the case of the wire *m n* figure 2, which, when the core is oversaturated, cuts the wasted lines of force *a a* which, having the wrong direction, generate an opposing electromotive force as shown. The output of the machine in the second case will therefore be the difference of two opposing electromotive forces. The interior magnet therefore does harm when not excited, the machine would in this case generate more potential if the magnet were removed altogether. The proper way to make such a comparative test would be to test the machine first with the interior magnet excited and then with this magnet removed altogether. Any difference may then be safely attributed to the interior magnet.

The experiment just described is only one among many which show how easy it sometimes is to mislead, by striking results, the minds of people who prefer to trust to their own powers of observation rather than to accept the opinion of a technical engineer.

PHILADELPHIA, March, 1887.

ELECTRIC RAILWAYS IN RUSSIA.

According to the Moscow *Technik* a project has been set on foot by some Belgian capitalists for the construction of a short railway in Russia to be worked by electricity, and to connect the towns of Varsovie, Wilanow, Mokotow and Czerniakow.

PRACTICAL NOTES CONCERNING THE CONSTRUCTION, USE AND MANAGEMENT OF STORAGE BATTERIES.[1]

BY A. RECKENZAUN.

(Continued from page 105.)

If we spread these materials upon two flat sheets of lead they will cover about 4.4 square feet each; the layer of spongy lead on one of the sheets being $\frac{5}{64}$ths of an inch deep, and that of the peroxide on the other $\frac{1}{16}$th of an inch thick. This pair of plates when immersed in a box containing acid, with their covered sides facing each other, would constitute a Faure accumulator. Unfortunately, however, the active materials will not adhere perfectly to metallic sheets, and this deficiency of good contact reduces the capacity. This explains the reason why Faure employed more than double the amount of paste for a given capacity than is being used by makers of perforated plates, for instance; but we do not at present concern ourselves about the various modes of *constructing* plates of secondary batteries, and deal only with general principles influencing the storage capacity.

(*b*) *Cells for Stationary Purposes.*

Capacity, 330 ampere hours.

Weight of peroxide in positive plates.....	15.00 lbs.
" " spongy lead in negative.....	11.25 "
Total weight of active material.....	26.25 lbs.

Capacity per pound of active material, 12.6 ampere hours.

Here we have 15 plates, 8 of which are negative, and 7 positive. There are in each plate 728 little squares offering a free surface of 131 square inches. The positive plates are approximately $\frac{5}{16}$ths of an inch thick, and the negatives $\frac{1}{8}$th; the volume of the peroxide is 91 cubic inches, and that of the spongy lead 62.5. The free surface offered by the positive plates to the acid is 6.37 square feet. These plates are much thicker, the metallic supports are correspondingly stronger, therefore altogether heavier and far more durable than those used for locomotive purposes. It appears that owing to the greater depth of active substance there is a smaller percentage of the same utilized. We may then be justified in saying that the capacity of an accumulator does not depend upon the *volume* of material alone, but also upon the mode of distributing it. No definite rules can be laid down, and we have to ascertain the best proportions for different types of plates by experiment.

ELECTROMOTIVE FORCE.

The E. M. F. due to the free hydrogen and oxygen is only 1.5 volts, but the normal E. M. F. of a lead and peroxide of lead element is 2 volts, whilst the initial force of a freshly-charged cell is as high as 2.25 volts; which, however, drops almost immediately when discharging. This higher figure is supposed to be accounted for "by the presence of ozone, which is oxygen charged with a higher energy in order to force the third atom of oxygen into the molecule." (Sprague, "Electricity.")

Gladstone and Tribe take the two volts to represent the normal E. M. F. of the arrangement of lead, peroxide of lead, and dilute sulphuric acid, and they believe that the 2.25 volts obtained at the first moment is due to hydrogen and oxygen occluded on the respective plates, and which either diffuse out, or are speedily destroyed. It will be seen hereafter that the E. M. F. varies considerably with the *rate* of discharge. When the external circuit resistance is large relatively to that of the internal resistance of the accumulator, then the E. M. F. of the latter is very constant, though not absolutely so, because the internal resistance increases gradually during the discharge as the specific gravity of the acid falls, a circumstance which

1. From the *Electrical Review*, London.

Digitized by Google

will be considered in conjunction with sulphating. Although during the discharge we obtain normally only two volts, the charging E. M. F. must always be more than 2.25 volts, since this represents the counter electromotive force of each cell when in the condition of the high activity indicated above.

There are actually two conditions regulating the charging E. M. F.; one is the counter E. M. F., which is slightly higher at the end than at the commencement, and the other the internal resistance, which, on the contrary, is least at the completion and greatest at the commencement of the charging process. These two influences partially counteract each other.

RATE OF CHARGE AND DISCHARGE.

This depends: 1, upon the free surface of the plates; 2, upon the thickness of the plates; 3, upon the efficiency aimed at; and 4, upon the E. M. F.

If a high efficiency is aimed at, then the charging must be effected at a reasonable rate, so that the gases evolved in electrolysis can be fixed by the plates almost as quickly as they are produced. Practice dictates that the economical charging rate of the thin plates (*a*) is about 4.5 amperes per square foot of peroxide in contact with the acid; and in the case of the thick plates (*b*) about 4 amperes per square foot of free surface of the positive plates.

When charging, the metallic support (grid) assists in decomposing water, hence it is usual to take the entire surface of the plates when expressing the charging rate. The actual free surface of the positive plates in the locomotive type (*a*) is 5.8 square feet, and that of the stationary type (*b*) 9.3 square feet; the relative currents to be used will, therefore, be 3 amperes in the former and 2.5 amperes per square foot in the latter. The E. M. F. required under these normal conditions averages 2.4 volts per cell. By charging at a higher rate it is possible to accomplish the process in less time, but at a sacrifice of efficiency, because we have to employ a higher E. M. F. to force the larger current through; the gases are generated too fast, whereby a larger percentage escapes in bubbles rising to the surface of the acid. Thus whilst we may use 2.5 or more volts per cell for charging, we can under no circumstances count upon more than two volts in discharging.

EFFECT OF THE RATE OF DISCHARGE UPON THE USEFUL CAPACITY AND THE E. M. F.

Tests made with cells (*a*) for locomotive purposes, with a constant external circuit resistance.

TABLE I.

Time.	Rate of discharge in amperes.	E. M. F. in volts.
9.45 a.m.	55.64	2.14
10.0 "	46.65	2.04
10.15 "	46.01	2.0
10.30 "	46.01	2.0
10.45 "	46.01	2.0
11.0 "	45.8	1.99
11.15 "	45.58	1.96
11.30 "	44.94	1.9
12.0 "	44.51	1.9
12.15 p.m.	44.51	1.9
12.30 "	42.8	1.87
12.45 "	40.66	1.87

Average rate, 45.76 amperes. Time occupied, 3 hours. Useful capacity, $45.76 \times 3 = 137.28$ ampere hours. At 1 o'clock the current dropped suddenly to 25 amperes, at 1.15 to 17 amperes, indicating that the cells were practically exhausted.

The charges and discharges were made with a series of six cells; the results of one only, however, are tabulated; this cell had been charged to its full capacity in each case. Nevertheless, table i. shows a useful capacity of only 137.28 ampere hours, against 156.38 ampere hours in table ii. At the high rate of discharge the current falls gradually, in fact it is not constant for more than three-quarters of an hour throughout the experiment; the E. M. F. likewise falls with the current, though not in the same ratio. This result indicates that the battery has been discharged at too high a rate; the combination of the gases could not take place with sufficient rapidity, and some of the energy had to be sacrificed. There are, nevertheless, numerous instances where such variations may be almost imperceptible, but where a high rate of discharge is much desired; this is the case with electric cars, boats, and the like. In table ii. the discharge is practically constant.

TABLE II.

Time.	Rate of discharge in amperes.	E. M. F. in volts.
9.0 a.m.	23.97	2.14
9.30 "	22.56	2.04
10.0 "	22.56	2.04
10.30 "	22.56	2.04
11.0 "	22.56	2.04
11.30 "	22.56	2.04
12.0 "	22.56	2.04
12.30 p.m.	22.56	2.04
1.0 "	22.35	2.0
1.30 "	22.09	2.0
2.0 "	22.09	2.0
2.30 "	22.09	2.0
3.0 "	22.09	1.99
3.30 "	22.09	1.96
4.0 "	20.7	1.9

Average rate, 22.34 amperes. Time occupied, 7 hours. Useful capacity, 156.38 ampere hours.

On further examination we find that the initial E. M. F. in tables i. and ii. is 2.14 volts; this lasted only a few minutes, nevertheless, it ought to be taken into account when ascertaining the *average* E. M. F. The current, again, in table i. drops suddenly from 55.64 to 46.65; this is only partially due to the drop of E. M. F., and mainly to the fact that iron tape was used as an external resistance, which got very hot in a short time; as the resistance rose with the temperature, so the current diminished. This variation is not so marked in table ii., where the current drops from 23.97 to 22.56 in the first half-hour; the same section of iron tape was used in this case, but of a length to give nearly double the resistance, and therefore about half the current.

In calculating the percentage of fall of current and of E. M. F. throughout an experiment, we ought not to take the first reading as the highest, but the second reading; because the initial effect is of little value and of but short duration. Taking the second and the last readings into account, we find that the fall of E. M. F. in table i. is .17 volt, or 8.33 per cent.; the fall of current is 5.99 amperes, or 12.83 per cent. In table ii. the differences are much less as a natural consequence of the lower rate of working; there the drop of E. M. F. is only 6.86 per cent., and of the current, 8.15 per cent. between the second and the last readings. With an average discharge of 45.76 amperes the current drops 12.83 per cent. in $2\frac{3}{4}$ hours, the external resistance being practically constant; by discharging the same accumulator at the average rate of 22.34 amperes, the current falls only 8.15 per cent. in $6\frac{3}{4}$ hours. This points to the well-known fact that a secondary battery must be discharged at a comparatively low rate if its current or E. M. F. is to be kept constant without altering the external resistance or altering the number of cells in circuit. In practice, it will be found that the most economical *current rate* is that which discharges a given accumulator in 10 hours; this holds good for stationary accumulators (*b*), but for the locomotive type (*a*) we can exceed this rate considerably without sacrificing efficiency.

ENERGY.

The energy given off by a storage battery is the product of the current and the E. M. F., and the *rate* at which energy is being given off is expressed in watts.

Digitized by Google

Reverting to table i., the rate at which energy is being consumed at 10 A. M. is 95 watts, whereas at 12.45 P. M. it falls to 76 watts. The *average rate*, however, is 45.76 amperes × 1.964 volts = 89.87 watts; and this represents .12047 electrical horse-power or 3,975.51 foot pounds. The *total* energy given off by this accumulator in the course of three hours was 3,975.51 × 3 × 60 = 715,591.8 foot pounds; therefore, one cell of 137.28 ampere hours useful capacity, working at the above average current rate and E. M. F., will yield .12047 h. p. for three hours.

In table ii. the same cell gave 44.68 watts, or .06 h. p. for seven hours, which represents 831,600 foot pounds, a gain of 116,008 foot pounds over that in table i.; this again shows the advantage of a low rate of discharge; the loss of energy through the rapid rate of working approaches 14 per cent.

RELATION OF STORED ENERGY TO QUANTITY OF ACTIVE MATERIAL.

The available amount of *energy* is of greater importance than the capacity of a storage battery; the one expresses the actual work done, whereas the other merely gives the current and the time. We have already seen that the available energy of an accumulator varies with the rate of working, consequently the relation between energy and quantity of material must also change according to circumstances. We have on a former occasion ascertained that the total weight of peroxide and spongy lead in the cell (*a*) for locomotive purposes is 11.5 pounds. We have also calculated that this cell, when discharged at the rate of 45.76 amperes, will yield a total energy of 715,591.8 foot pounds; hence in this case each pound weight of active material gave $\frac{715,591.8}{11.5}$ = 62,225 foot pounds. Whilst discharging at the rate of 22.34 amperes the "output" was 831,600 foot pounds, or 72,313 foot pounds per pound weight of active substance; this is equivalent to 2.19 h. p. per minute per pound of material.

INTERMITTENT DISCHARGE.

If we interrupt the process of discharging and allow the plates a moment's rest, then we obtain on rejoining the circuit an E. M. F. and current slightly above that which was observed just before the interruption. By such intermittent discharges it is possible to obtain tolerably regular results even at very high current rates. The gases have time to arrange themselves, whilst the liquid obtains access into the pores of the plates. An accumulator is just like a horse; if you give the horse its regular easy work to do, then he will go along at a constant rate all day long; give him too great a load, then he will gradually lose in speed until he comes almost to a standstill; allow him to "blow" for a quarter of an hour occasionally and he will get along with the great load at a good rate during the regular intervals. But if we take the time as well as the energy into consideration, then we find that the steady easy work will turn out more efficient than the great exertion with intermittent rest. Efficiency, however, does not always mean economy, and there are numerous cases where a small secondary battery worked at a high rate is far more economical than the more efficient larger apparatus working under its normal conditions. The efficiency in *ampere hours*, for instance, yielded during the experiment of table i. was barely 79 per cent., whereas that of table ii. is nearly 90 per cent. But in the one case the energy is diffused in the short space of three hours and in the other in seven hours; and the rate of energy given off in table i. is twice as great for the same weight as in table i.

RESISTANCE OF A SECONDARY BATTERY.

The internal resistance of a storage battery is a variable quantity; it is least when the cell is fully charged, and most when the same is discharged, and it varies with the rise or fall of the specific gravity of the electrolyte. Sulphate is being formed on the lead plates during the discharge, and the same is again dissolved during the process of charging, consequently the strength of the sulphuric acid in a cell will vary continually, and it is possible to measure approximately the quantity of energy stored or withdrawn at any time by the specific gravity of the electrolyte. Results of extensive experiments made by the author upon this point will be discussed hereafter under the subject of sulphating.

The internal resistance of a cell can easily be calculated from the observed current, E. M. F. and external resistance by means of Ohm's law, $C = \frac{E}{R + r}$ where C represents the current in amperes, E the electromotive force in volts, R the known external circuit resistance, and r the internal resistance of the battery.

In table i. we find the rate of discharge at 10 a. m. to be 46.65 amperes with 2.04 volts at the terminals, and an external resistance of .0433 ohms; the internal resistance at this moment is approximately .0004 of an ohm. At 12.45 p. m. the current dropped to 40.66 amperes, the E. M. F. to 1.87 volts, and the internal resistance rose to

$$r = \frac{1.87 - 1.74838}{40.66} = .00299 \text{ of an ohm,}$$

or over seven times the resistance calculated for the commencement of the discharge.

In table ii., again, with a current of 22.56 amperes at 9 a. m., an E. M. F. of 2.04 volts through an external resistance of .089 ohms the internal resistance was nearly .0004 with the cell fully charged. At 4 p. m. when the current dropped to 20.7 amperes and the E. M. F. to 1.9 volts with the same external circuit, the internal resistance rose to .0028 of an ohm, exactly seven times that which was observed at the commencement of the discharge.

The resistance of a battery may be reduced by increasing the strength of the acid, but this cannot be carried beyond a certain limit, and this limit is determined by the minimum density requisite for the formation of a definite amount of sulphate; this internal resistance can also be reduced by placing the plates closely together (here, again, we are guided by a minimum volume of electrolyte); and finally the resistance can be reduced by increasing the surfaces of the plates, and this means enlarging the battery beyond the intended capacity. Therefore we are bound to allow a certain internal resistance, below which it would be difficult to go without sacrificing something else of greater importance, for, after all it must be admitted that the resistance of a well constructed secondary battery is exceedingly low in comparison with the circuit resistances usually connected with it.

EFFICIENCY OF SECONDARY BATTERIES.

M. E. Reynier, in a communication to the Physical Society of Paris, in May, 1881, ascertained the efficiency of storage batteries in the following manner:—Writing E for the E. M. F. of the battery, E_1 the E. M. F. of the charging apparatus, r the resistance of the accumulator, E_{11} the difference of potential at the lamp terminals, R the resistance of the external (lamp) circuit, R_1 the resistance of the charging apparatus, t the time of charge, t_1 the time of discharge, W the work expended by the charging apparatus, and P the useful work applied in the external circuit; then he argues algebraically thus:—

$$W = E_1 \frac{E_1 - E}{R_1 + r} t$$

$$P = \frac{E_{11}^2}{r + R}$$

Digitized by Google

then he assumes that

$$\frac{E_1 - E}{R_1 + r} t = \frac{E_{11}}{r + R} t_1$$

whence

$$t_1 = \frac{\frac{E_1 - E}{R_1 + r} t}{\frac{E_{11}}{r + R}}$$

Substituting for P, we obtain the equation

$$P = \frac{E_1 - E}{R_1 + r},$$

whence he obtains the efficiency

$$f = \frac{P}{W} = \frac{E_{11}}{E_1}.$$

Expressed in words, M. Reynier determines the efficiency by dividing the difference of potential at the lamp terminals by the E. M. F. of the charging dynamo; and he makes the efficiency independent of the resistances as well as of the time and current.

From a numerical example, where $E = 2.15$; $r = .006$; $E_1 = 2.36$; $R_1 = .006$; $E_{11} = 1.93$; and $R = .054$; M. Reynier obtains $f = \frac{1.93}{2.36} = 81.8$ per cent.

The foregoing argument can only be accepted if the charge in ampere hours equals the discharge in ampere hours; such, however, has not as yet been found possible in practice; the time and the current density play as important a part in calculating the *efficiency* of a storage battery as the E. M. F's. The efficiency of a storage battery should be expressed independently of all external influences, such as circuit resistance, resistance of the generator, etc., and it is usual to ascertain it by the expression

$$f = \frac{c \times t \times E}{c_1 \times t_1 \times E_1},$$

where c_1 = the charging current, c = the discharge current, E_1 the charging E. M. F. at the terminals of the battery, E the average E. M. F. of the cells when discharging with an average current, c; t_1 the time (in hours) of charging, and t = the time (in hours) of the discharge.

Examples: The current used for charging the cells (a) was 29 amperes, with an E. M. F. of 2.4 volts per cell; the time occupied in charging was six hours for both experiments i. and ii. The discharge, however, of table i. yielded an average current of 45.76 amperes for three hours, with an average E. M. F. of 1.964 volts, the efficiency, therefore, for this

$$= f = \frac{45.76 \times 3 \times 1.964}{29 \times 6 \times 2.4} = .645,$$

or 64.5 per cent.

The results of the test in table ii. were much higher; there we have with 22.34 amperes and two volts a steady discharge for seven hours, giving an efficiency of

$$\frac{22.34 \times 7 \times 2}{29 \times 6 \times 2.4} = 74.9 \text{ per cent.}$$

Considering that the charging of these cells was effected at the comparatively high rate of 29 amperes, we must admit that an efficiency of 74.9 per cent. is exceedingly favorable; at a still lower rate of charging and discharging, and with more frequent readings, it is possible to obtain even higher efficiencies; but laboratory tests should not be taken as a basis of calculations intended for commercial purposes. We have already stated that a commercial efficiency of at least 70 per cent. may be relied upon in all cases where storage batteries are used under normal working conditions, and this we propose to bear in mind at all times when prime costs, consumption of fuel, maintenance, depreciation, and kindred questions come to be studied in detail. Until recently it has been a matter of opinion with engineers as to the expense of an installation containing storage batteries. Manufacturers and others interested in the exploitation were apt to exaggerate the durability, efficiency, and other virtues of accumulators. Prejudiced opponents, on the other hand, denounced the storage battery not only as an expensive, almost useless, adjunct to an installation, but they predicted with emphasis that the storage battery could never become a commercially successful article. Among these prophets was Edison, the wizard of Menlo Park; perhaps he, like many others, has been converted by this time. We do not intend to convey the impression that the secondary batteries of the present day are perfection and incapable of further improvements; far from it, but we can now point to remarkable and economical results attained with storage batteries; results which compel us to keep our attention constantly alive, results which encourage us to renewed efforts in the direction of further improvement. Many have entered the field of competition, but astonishingly few have kept to it. It is all the more praiseworthy for the few survivors to have stuck to their difficult task; they find their perseverance rewarded. What we want now is a greater number of energetic men in the field, a healthy, honest competition, improvements which will lower manufacturing costs, more tools, more men, more factories to supply the ever increasing demand. We want to push new inventions which do not infringe existing rights and these rights can easily be ascertained with precision. There is no need of treading on anybody's toes, the margin is wider than the uninitiated imagine; there is no chance of a monopoly excepting for those who are powerful and clever enough to produce the cheapest, most durable, and most efficient storage battery on lines different from their forerunners. The whole world is in need of accumulators, and there is room for plenty, if only a sufficient force devote itself with intelligence to one of the most interesting, and, at the same time, one of the most promising of modern industries.

GRAPHIC REPRESENTATIONS.

In order to appreciate fully the internal working of a secondary battery, it is best to construct curves; there we can see at a glance the variations which take place in the course of an experiment. Such curves for secondary batteries are as useful and as instructive as the indicator diagrams of a steam engine. Figures 1, 2 and 3 are taken

Fig. 1

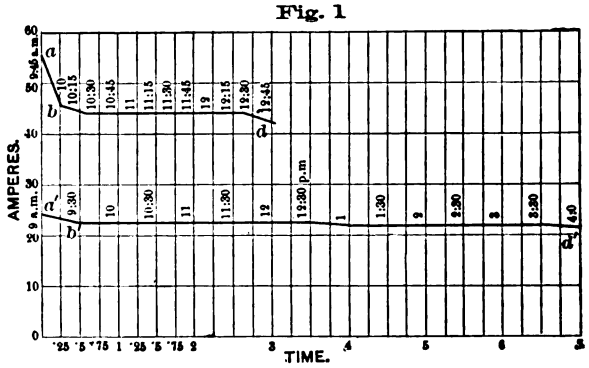

from table i. and ii. (page 174). For the abscissæ in each we take the time in hours, and for the ordinates we plot in figure 1, current in amperes, in figure 2, E. M. F. in volts, and in figure 3, energy in watts. On each diagram there are two curves, one showing the discharge at a high rate (table i.), and the other at the normal working rate (table ii.) of one and the same cell.

Digitized by Google

FALL OF E. M. F. AND CURRENT.

Let us examine the whole process by means of the curves thus plotted. Looking at figure 2, we observe a rapid fall during the first few minutes between the points *a*, *b*, on the one and a^1, b^1, on the other. This drop in the current density was partly due to an increase in the external resistance which was composed of iron tape, and which resistance rose slightly as the metal got heated, but a very similar and sudden decrease of current always takes place in a fully charged lead accumulator, whose initial E. M. F. is

Fig. 2

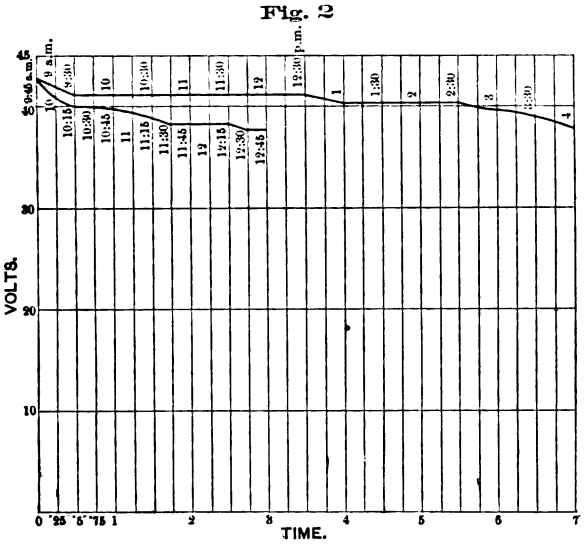

generally between 2.15 and 2.25 volts per cell, and which high E. M. F. is due to the gases suspended on the surfaces of the plates; we have, in fact, at the first instant a gas battery, the spare oxygen or ozone of which is speedily consumed. Another cause of this diminished intensity, according to Dr. Lodge, lies in the fact that as the surface hydrogen disappears, a scum of sulphate is formed on the negative plate; this film of sulphate increases the internal resistance of a cell more than it diminishes the E. M. F., but it considerably reduces the strength of a powerful current. The greater the current rate, when the

Fig. 3

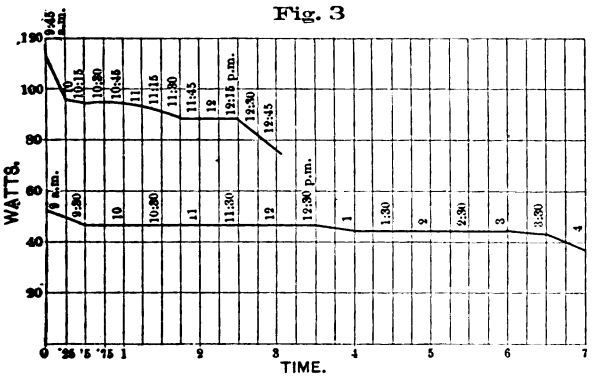

cell is being discharged, the more will be the resistance offered by this scum, and this is the main reason why a cell refuses to give very strong, and at the same time, constant currents for prolonged periods. "On allowing the cell to stand," says Dr. Lodge, "the scum clears off, and the original power is to a great extent restored. And there is this to be noticed about the scum, that the faster it is formed the faster it clears off. If it is formed very rapidly by a very powerful current, the cell need not stand long to recover itself.

The clearing away of this insulating film is supposed to be due to "the local action between the dehydrogenized lead in the deeper layers of the coating and the hydrogenized lead of the surface; and if this is so, there must come a time when the film will refuse to clear off, and a permanent increase in the internal resistance will set in, increasing as the action penetrates deeper and deeper into the negative coat, until the still metallic lead can only be reached by penetrating through a surface layer of non-conducting matter, consisting mainly of sulphate, but also," Dr. Lodge thinks, "of the lower oxides of lead."

Prof. Herschel made experiments some four or five years ago with a clean lead plate, and a plate coated with peroxide, both being immersed in diluted sulphuric acid; he discovered that a non-conducting film of sulphate was formed on the clean plate the instant it was used to produce a current, which effectually screened the liquid from the metal, and thereby caused an increase in the internal resistance. This scum never forms when the negative plate is standing idle in the acid, it can only form when the circuit is completed. Recharging the cell removes the scum from the negative lead strip, not apparently by reducing it, but by making it peel off. If, instead of using a clean homogeneous lead plate, we employ spongy lead, exposing a very large surface, then this film takes a much longer time to form. The constancy of the current depends upon the amount of hydrogen occluded, consequently the *rate* of discharge must be in proportion to the total available surface. The diagrams before us illustrate this most forcibly; assuming that the rapid fall during the first 15 minutes is partly due to temporary causes indicated at the beginning of this paragraph, we still find that in the endeavor of working the cell at a very high rate, the current is reduced from 46.65 to 40.66 amperes

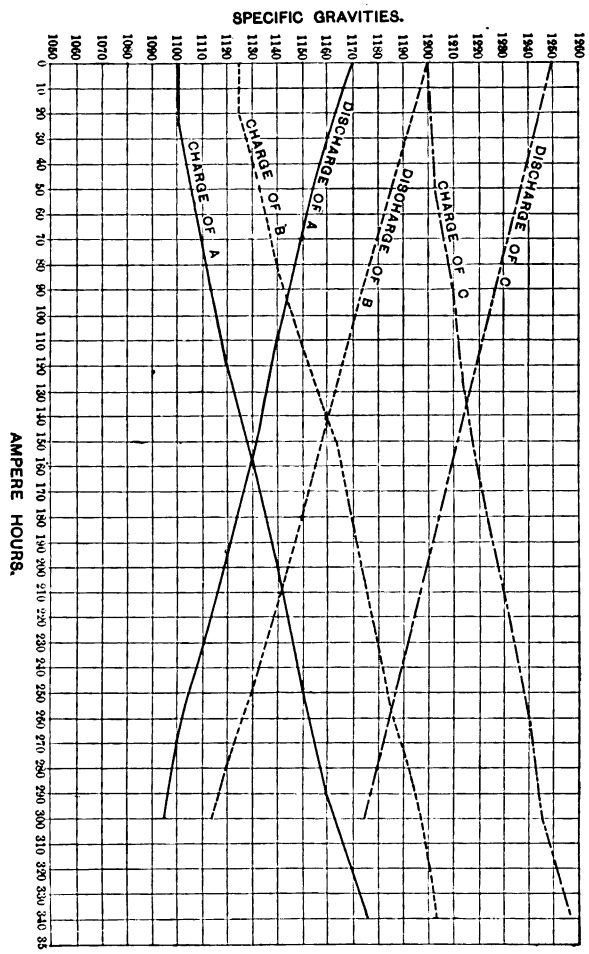

Fig. 4

in the course of 2.75 hours, whereas at a reasonable rate of discharge the difference is only 1.86 amperes during 6.75 hours. We can only obtain a large working surface within a small space, by using finely divided lead, oxides of

Digitized by Google

lead reduced to spongy lead for the negative plate; it is furthermore important that the layer of spongy lead be of a moderate thickness, because full activity will only take place to a certain depth, since the acid can either not penetrate sufficiently into the porous mass, or it gets speedily exhausted within as it combines with the lead, and clogging occurs beneath through the non-conducting products thus created. In order to facilitate diffusion with the main body of the liquid, the plates must be comparatively thin; in fact, the thinner they are the greater is the activity, and the more constant the discharge, always provided that the *volume* of porous material bears a certain relationship to the total capacity of an accumulator.

SULPHATING.

The formation of sulphate of lead, on lead plates immersed in sulphuric acid, is a natural consequence. Sulphate is a necessity; without it the charge could not be retained for a long time, and, above all, it prevents local action between the metal and its oxides, but a superabundance of this compound of lead is detrimental to the life and proper function of a secondary battery. Whilst charging, the lead sulphate on the plates is decomposed and re-formation of sulphuric acid takes place, so that ultimately the strength of the solution is fully restored. On discharging again, lead sulphate is produced on both the positive and negative plates, and thereby the strength or specific gravity of the acid becomes diminished.

STRENGTH OF ACID.

Concentrated sulphuric acid is a bad conductor, so is pure water, but a mixture of the two furnishes a good conducting medium. The best density of the mixture depends upon various circumstances; if the acid is too strong there is a tendency of an excess of sulphate being formed on the plates, causing them to expand and finally buckle when discharging; if the solution is too weak, then there is the danger of almost pure water being left at the end of the discharge, and, consequently, great internal resistance. When a cell is newly made up with "formed" plates and the acid is put in, the specific gravity will drop immediately, indicating the formation of sulphate; on charging the cell the strength of the acid will gradually rise again. Tables iii. and iv. were prepared with a view of illustrating this phenomenon. There were three cells used, A, B and C, of equal size and capacity; cell A was filled with acid of 1,100° (water taken at 1,000), B 1,125, and cell C with acid of 1,200. Immediately after pouring the liquid into the boxes circuit was made with the charging apparatus, but some 20 amperes for one hour were expended before any change in the density of the liquid took place;

TABLE III.—CHARGING CELLS.

Ampere hours.	Densities of acid.		
	A.	B.	C.
0	1100	1125	1200
20	1100	1125	1200
50	1105	1133	1203
100	1115	1143	1211
150	1127	1164	1218
200	1139	1174	1229
250	1150	1184	1240
300	1162	1200	1245
340	1175	1208	1256

there was even a tendency of the specific gravity falling in spite of the charging operation; thus there must have been a kind of equilibrium between two opposing forms of energy; one struggling to produce sulphate and the other struggling to reduce it.

After this expenditure of 20 amperes of current at some 2.38 volts E. M. F. per cell, the specific gravity began to rise almost in proportion to the amount of charge put into the cells. Diagram, figure 4, will show the effect more strikingly than the tables; the charge in ampere hours is taken for the abscissæ and the specific gravities for the ordinates. The acid of A which was at the start, 1,100, rose to 1,175; that of B rose from 1,125 to 1,208 and the density of the acid in C went up from 1,200 to 1,250, all with a charge of 340 ampere hours. The cells were left standing over night; next morning on observing the hydrometer (or acidometer) the densities stood at 1,170, 1,200 and ,1250 respectively for A, B and C, giving a reduction of 5, 8 and 6 degrees in the liquids. This discrepancy may be attributed to three causes: firstly to

TABLE IV.—DISCHARGING CELLS.

Ampere hours.	Densities of acid.		
	A.	B.	C.
0	1170	1200	1250
50	1155	1184	1238
100	1143	1168	1227
150	1132	1154	1215
200	1118	1141	1202
250	1104	1129	1189
300	1094	1115	1176

a slight formation of sulphate; secondly to surface leakage; thirdly, and, perhaps, *mainly*, to strata of different specific gravities in each cell. The liquid in the lower portion of a newly charged cell is generally slightly more acid than that near the surface; the hydrometer bulb dipped into the lower part of the vessel and, therefore, did not indicate the *average* density, if the assumed strata existed. Theoretically the acid curves of figure 4 should all be straight lines—they are so approximately only, and the irregularities are no doubt due to the last-mentioned causes. Diffusion of the liquids can be assisted by stirring, but it will be observed that in doing so large gas bubbles float up immediately which may mean some loss in the capacity; towards the end of the charge, if the same is carried to completion and the liquid is allowed to "boil," by a little over-charging, the acid gets stirred up automatically, A, B and C were not overcharged.

(*To be continued.*)

ELECTRICAL TRANSMISSION OF POWER BY BROWN'S DYNAMOS.[1]

WHILST steady progress is being made in almost every branch of electricity, the theory developed and the instruments perfected, the most interesting question, the electrical transmission of power, which first roused the enthusiasm of the scientific and unscientific, seems to remain a *pium desiderium*. The Niagara Falls still waste their energy instead of enlightening and benefiting the whole State of New York and the adjoining districts of Canada; and the waves continue to gnaw at the British Isles without giving any return by supplying the lighthouses with the necessary light currents. A few isolated cases are known where electricity affords the satisfactory means of utilizing at a distance the power which is cheap but useless at one particular spot; but we hear nothing of permanent installations on a large scale. At the Vienna exhibition of 1873, a gas motor was made to drive an electric machine whose current was sent to another electric machine which actuated a little centrifugal pump; that was an experiment. Such experiments were repeated at the exhibitions at Philadelphia, Paris, London, Munich, and again at Vienna, everywhere exciting the most lively interest. At Munich, M. Marcel Deprez made a very decided and promising step forward; his continued tests between Paris and Creil, a

1. From *Engineering*, London, March 11.

Digitized by Google

distance of 35 miles, followed ; but a long time passed before any definite results were published, and it required the munificence of Baron Rothschild to render the tests possible. The uncertainty about the results had shaken confidence, and when it became known finally that the commercial efficiency had not risen above 45 per cent., many a practical engineer returned to his old opinion that, after all, the transport of coal was cheaper than the transport of power in any form.

Under these circumstances all further experience is most welcome. We are to-day enabled, through the courtesy of Mr. C. E. L. Brown, of the Tool and Engine Works at Oerlikon, near Zurich, to place before our readers the results of some tests on the electrical transmission of power, made with Mr. Brown's new dynamos and motors. The tests were conducted by the maker in conjunction with independent and competent experts, Professors Amsler-Laffon, Gysel, Veith and Weber, and Messrs. Keller, Lang, Meier, Naville, Waldner, and Zschokke ; the report was compiled by Prof. Amsler-Laffon. The machines were constructed for the transmission of a water power of about 50 horse from Kriegstetten over a distance of 8 kilometers (five miles) to the works of Mr. Mueller-Kaiber at Solothurn, in Switzerland. The tests were made in the works of Mr. Brown, on conditions as nearly as possible equal to those to be fulfilled later on ; their object was a practical one; to answer the questions : What power must be supplied to the primary machines, so that the secondary machines can do a certain work ? What relations exist between the speed of the primary and of the secondary machines ? How does the speed vary with varying work ? Electrical instruments were used only so far as electrical magnitudes were directly concerned ; the power measurements were taken mechanically. We will conclude these introductory remarks by adding that a commercial efficiency of over 70 per cent. was obtained.

Fig. 1

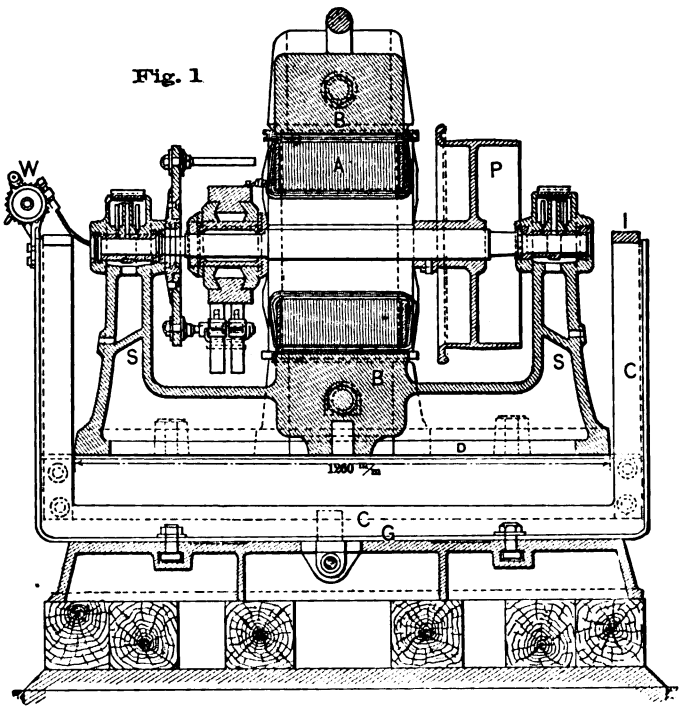

The general design of the dynamos will be understood from diagrams ; figure 1, a longitudinal section, figure 2, an end elevation, and figure 3, the plan, showing the construction. Two vertical pillars, F, of wrought-iron form the field magnets ; they are united by cast-iron blocks, B, acting as pole pieces. The lower block B, the bed-plate D, and the supports S, for the armature A, are cast in one piece. The armature of the motor is a modified Pacinotti-Gramme ring. We are not in a position to give a detailed description of the peculiarities of this armature; but it appears clear that the remarkable efficiency of Mr. Brown's dynamo must be ascribed to the ingenious though simple alterations which he has made in the armature and its relative position to the field magnets. The shaft bears the armature on the one end, and the pulley P on the other, that is, within the bearings. One of the first dynamos embodying these improvements gave at a speed of 1,000 revolutions per minute a difference of potential at the terminals of 65 volts and a current of 160 amperes ; the armature wire weighed 12 kilogrammes (26 lb.) with a resistance of 0.008 ohm ; the field magnet coils weighed 33 kg. (73 lb.), and had a resistance of 25 ohms. The newer dynamos for the Solothurn installation are of a larger type, and give about 1,200 volts each, with the normal speed of 700 revolutions per minute. Their principal dimensions are : Total length, 4 ft. 1 in.; width, 4 ft. 5 in.; height, 3 ft. 3 in.; diameter of armature, 20 in.; length of armature, 12 in.; and diameter of pulley, 20 in.; width, 7 in.

Fig. 2

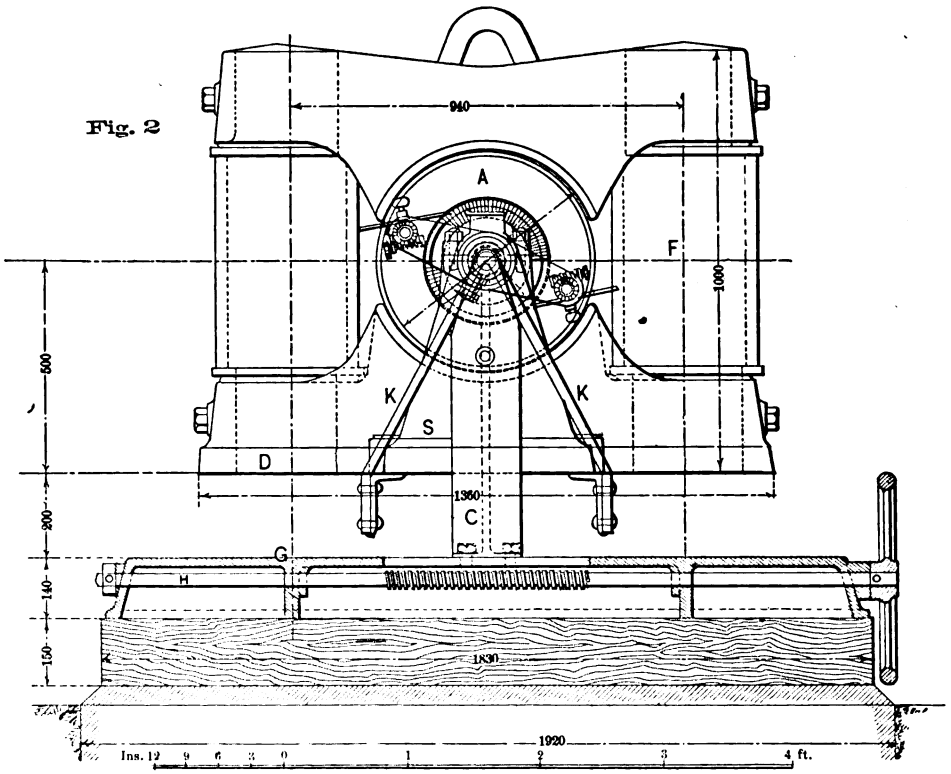

As reliability is the first requirement, Mr. Brown decided to use four machines, two generators and two motors, so that in cases of emergency one pair alone could take the main part of the work ; the water-power to be transmitted varies between 30 and 50 h. p. A speed of 700 revolutions was selected, both as being economical and not too high ; a lower speed would have required heavier and more expensive dynamos. The three lead system has been adopted, all three wires being naked pure copper wires of six millimeters ($\frac{1}{4}$ in. in diameter) suspended on poles about 120

Digitized by Google

feet distant from one another with fluid insulators; the river Aare is crossed by one span of 380 feet length of a silicium bronze wire, having about the same thickness and equal conductivity as the copper wire, but possessing at least double the tensile strength. With the two generators in series an electromotive force of 2,500 volts is obtained. The three wire system offers the advantage that should one of the motors stop, the other would never receive more than one-half of the total tension; an arrangement has further been made by means of which one of the outer wires can be connected parallel with the central wire, in case one of the generators should have to work alone; thus the loss in the conductors would not be doubled, but increased by one-half only. The primary station comprises besides the two generators two automatic shunts short circuiting the field magnets in case the currents should become dangerously strong—two ampere meters—and further, three lightning conductors with lightning plates of an original kind for the protection of the dynamos against

Fig. 3

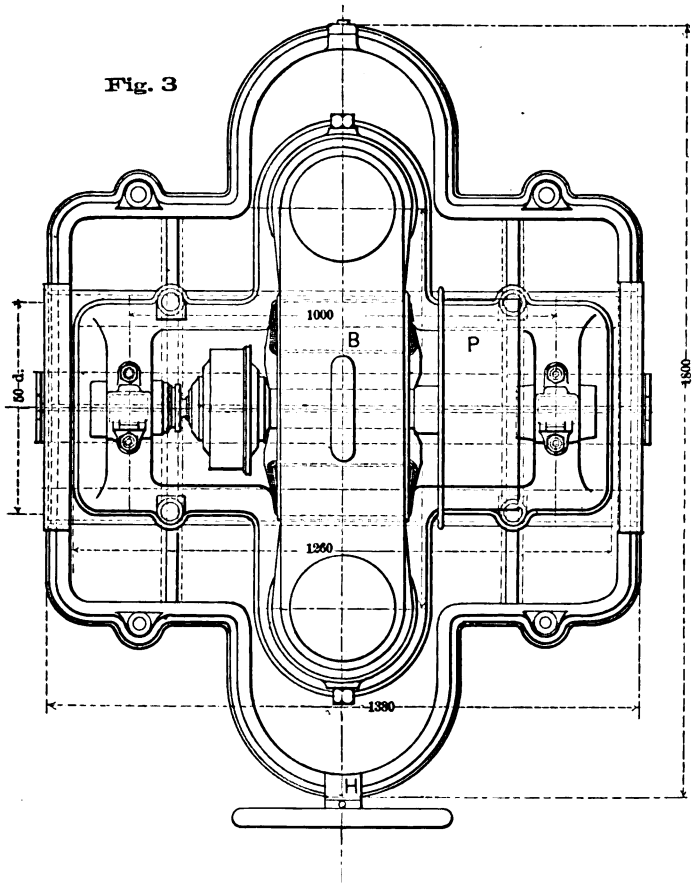

lightning. The secondary station is equally protected; it contains further two fluid cut outs permitting of stopping the two motors suddenly without endangering the insulation.

The contract required a constant speed independent of the work to be done as a main condition. Constant speed may be secured mechanically or electrically. Electrically this regulation may be effected by various methods, three of which command particular consideration. The first method uses a primary dynamo (generator) of the compound type, and a simple shunt motor for the secondary station; this arrangement recommends itself for medium tension currents. The second method has compound wound machines for both the primary and the secondary stations; the object of the series wire being in the first case to supply a higher tension for a greater load, and in the second case to weaken the magnetic field of the motor proportionally; this arrangement offers advantages when one generator has to feed several motors. The third method takes series dynamos for both stations, and as it is particularly adapted for high tensions, and when one primary station has to supply one secondary, it was selected here as we mentioned already; it further admits of easy starting, even with a full load. With properly designed and constructed dynamos this arrangement ought to turn the motors with a constant speed, provided that the generator rotates at a uniform rate. Mr. Brown finds that when varying the brake power applied up to 20 per cent. the speed of the motor did not vary by more than three per cent. These slight variations might further be reduced if it should become necessary.

We come now to the test at the Oerlikon works, carried out under the actual conditions under which the dynamos will have to work, the line wire of 9.5 ohms resistance being replaced by an iron resistance of 10 ohms. This iron wire was shortened in proportion to its becoming heated through the current whose strength was controlled by means of a voltameter; thus the resistance was kept constant. Being aware of the diffidence with which the practical engineer regards electrical power tests, in which he has to trust electrical instruments of whose reliability he cannot convince himself by experiments of his own, Mr. Brown decided in favor of mechanical power tests. All the four dynamo machines were suspended in cradles, C, bolted to a baseplate, G, which was provided with a screw spindle, H, for the adjustment of the belts. The vertical limbs of the cradles end in knife edges, I; and on these the whole dynamos rested, being held by an iron strap, K, which strap was firmly bolted to the dynamo bedplate, D. The edges, J, were placed exactly in the prolongation of the armature shafts. Pointers of 6 ft. length were attached to the field magnets; and the power applied, or required, calculated from the deflections from the vertical line which the generators suffered under the pull of the belts from the steam engines, and the motors under the influence of the currents transmitted from the generators. The speeds were indicated on a counter connected with the armature spindles by a flexible shafting and a worm gearing, W. This method of estimation necessitated preliminary trials to ascertain directly by weights applied to the pulley P, the power corresponding to the different positions of the pointer. For this purpose the armature was rigidly fastened to the field magnets during these trials; thus a power scale was obtained, indicating in kilogrammes the weights which acting on a lever arm of 0.25 metre (9.8 in.) —the common radius of all the pulleys, P—produced the respective deflections.

The total resistance of the four dynamos connected in series—that is, the two generators in series connected in series with the two motors, also in series—amounted to 13.44 ohms; adding to this 10 ohms for line resistance, we get the total resistance of the system equal to 23.44 ohms. The belts having been put on the primary dynamos the motors were coupled to a light machine whose circuit resistance was increased by adding arc lamps. When the generators made about 100 revolutions per minute, the motor armatures began to spin; the deflections of the pointers soon become stationary. All corresponding observations were taken within the space of one minute.

The tests were made on five days in November, 1886; the principal tests, which we summarize, on November 22d and 29th. Table i. gives first the results of the tests of November 29th. The columns P_1 and P_2 refer to two primary machines, S_1 and S_2 to the secondary machines; those marked T state the speeds, Z the deflections of the generators; the same letters with dashes apply to the motors; column E gives the current strength in amperes. The deflections under Z are given in kilogrammes, as has already been explained. The speed counter for P_1 failed after 14 observations had been taken. The figures in parentheses were only estimated. The lower part of table i. relates to the tests of November 22d; two further tests of November 30th are subjoined. Table ii. refers to the

Digitized by Google

same tests, giving the corrected values after elimination of possible errors. The suspension of the dynamos proved very delicate and satisfactory. There was, however, magnetic attraction between the dynamos and the ground-plate G, the distance from the bed-plate D to G being only about ½ ft. It was ascertained that this magnetic attraction would lead to too low readings when the pointer was near zero, but would be without influence when the pointer was near 40; and would cause too high readings after that. This was determined by passing electric currents through the field magnets and forcing the pointer gradually over the scale by loading the machine, regulating the currents to the strength which the tests (table i.) had shown to correspond to the respective position of the pointer. The error is very slight, and attains practical importance only for the readings above 80, when reductions have been made, ½ kg. for 80 kg. to 90 kg., 1 kg. for 90 kg. to 100 kg., 2 kg. for 100 kg. to 110 kg., 3 kg. for 110 kg. to 115 kg., and 4 kg. for 115 kg. to 120 kg. The belts might further tend to shift the cups of the strap K, slightly on the knife edges J, and since the pointer scale was determined when the belts were off, these errors would only appear whilst the dynamos were at work, and not during the preliminary trials. This error, again, could only be insignificant, as the radius of curvature at the cups was very small. Yet this shifting had actually occurred in the case of the generator P_2, for its pointer did not go back to zero when the machines were stopped, but stood at 2½ kg. Similarly, the motor S_1 had been shifted a little, of course in the opposite sense, its pointer pointing to 1 kg.

The whole method has carefully been analyzed by Prof. Amsler-Laffon. The position of the pointer will depend upon the electrical reaction between the armature and the field magnets; the friction in the bearings, and the resistance which the moving armature and pulleys encounter from the air. We have further unavoidable losses of power within the dynamos, and the mechanical defects which would accompany any mode of suspension. As we have just mentioned, the belts might be expected to pull the dynamos slightly out of their central line, shifting them horizontally; a slight deviation from the central axis might also occur in the vertical plane; and lastly, we have the magnetic attraction between the dynamos and the ground plate G, already alluded to. Prof. Amsler convinced himself that these sources of error could not materially affect the results. That this opinion is justified, he proves by determining the efficiencies first, directly from the figures observed, by dividing the power A_1 imparted to the generators into the power A_2 yielded by the motors, this calculation giving the column $\frac{A_2}{A_1}$, or efficiency in per cent; and secondly, by subtracting from the powers—absorbed or reproduced respectively—the powers corresponding to the minimum loads, and thereby eliminating those possible errors which cannot be controlled experimentally, but which would be the same for higher and smaller loads. A_2 and A_1 represent the powers received or expended in each particular case, A_2^0 and A_1^0 the same for minimum loads derived from the means of experiments No. 1 and No. 2, table ii., thus $A_2^0 = 3.25$; $A_1^0 = 4.48$; if we then form the quotient of the differences $\frac{A_2 - A_2^0}{A_1 - A_1^0} = Q$, we arrive at the commercial efficiencies by a method independent from the sources of error which influenced the figures in column $\frac{A_2}{A_1}$. It will be seen that there is a most satisfactory agreement in the commercial efficiencies as determined by these two methods; those under Q are, of course, the more reliable figures.

Prof. Amsler-Laffon adds a few recommendatory remarks to his report. The Brown dynamos are distinguished by a simple, solid, and judicious construction; the brushes are easily accessible, showed very little sparking, and did not require any adjustment during the tests when more and more lamps were added; there would thus be very little wear to both brushes and collectors. The field magnets became only slightly warmer during a run of several hours. The speed—700 revolutions per minute

TABLE I.

Number.	P_1.		P_2.		S_1.		S_2.		E.		Resistance.
	T_1.	Z_1.	T_2.	Z_2.	T_1^1.	Z_1^1.	T_2^1.	Z_2^1.	Amperes		
		kg.		kg.		kg.		kg.			
1	723	6	725	13.5	692	3	690	9.5	1.5	....	Nov. 29, '86.
2	722	7	720	14	692	3	690	9.5	1.5		Shunt of
3	760	22	758	40	752	13	750	26	4.5	5	light ma-
4	732	27	731	45	725	18	725	32	4.5	5	chine, with
5	733	45	730	74	724	32.5	725	53	10	10	some in-
6	735	46	732	73	729	33	725	53	10	10	candes-
7	710	60	712	92	708	42	705	57	11	15	cence and
8	700	52	695	82	685	37	686	57	11	15	arc lamps.
9	752	74	730	105	727	51	722	75	11	15	
10	743	80	741	118	747	56	747	84	11	15	
11	720	52	718	79	717	35	730	66	12	20	
12	720	49	718	88	717	34	724	64	12	20	
13	731	52	730	93	731	36	731	66	12	20	
14	687	125	683	147	682	89	683	101	12	20	
15	(740)	88	738	123	742	64	744	86	15	25	
16	(767)	73	765	116	773	51	778	86	15	25	
17	(740)	69	738	103	738	40	737	74	15	25	
18	(756)	31	754	73	750	21	756	50	15	15	
19	(727)	42	725	73	720	30	724	50	15	15	
20	(717)	39	715	69	710	26	711	47.1	15	15	
21	726	18	718	15	685	14	683	14	2	....	Nov. 22, '86.
22	716	39.5	715	42	716	30	714	35	5.5	5	Arc lamps
23	716	60	715	72	716	45	713	57	9	10	and incan-
24	722	67.5	725	71	726	650	720	57	9	10	descence
25	716	73.5	715	86	716	63	714	65.5	10	15	lamps.
26	742	84	740	84	745	63	741	65	10	15	
27	702	124	702	112	715	89	708	84	14	20	
28	706	120	706	110	716	87	741	83	14	20	
											Nov. 30, '86.
29	742	5	742	6	685	0	705	0	.....	....	Motor Belts
	840	5	828	7	800	0	771	0	.....	....	thrown off.

TABLE II.

Number.	(P_1 and P_2).		(S_1 and S_2).		A_1.	A^2.	$\frac{A^2}{A_1}$.	$Q = \frac{A_2 - A_2^0}{A_1 - A_1^0}$	
	$\frac{T_1+T_2}{2}$	Z_1+Z_2	$\frac{T_1^1+T_2^1}{2}$	$Z_1^1+Z_2^1$	H. P.	H. P.	Per Cent.	——	
		kg.		kg.					
1	724	17	691	13.5	4.30	3.25	75.8		
2	721	18.5	691	13.5	4.66	3.25	69.9		
3	759	59.5	751	40	15.76	10.63	67.4	65.4	
4	731	69.5	725	51	17.78	12.91	72.8	72.9	
5	731	116.5	726	86.5	29.73	21.92	73.74	73.9	
6	733	116	727	87	29.68	22.06	74.38	74.7	
7	711	148.5	704	100	36.86	24.58	66.67	65.9	
8	697	131	685	95	31.83	22.72	71.37	71.2	
9	731	174.5	724	127	44.53	32.10	72.08	72.0	
10	742	191	747	140.5	49.47	36.64	74.06	74.2	
11	719	128	723	102	32.13	25.74	80.13	81.0	
12	719	134	720	99	33.63	24.88	73.98	74.2	
13	730	141.5	731	103	36.06	26.28	72.89	72.9	
14	685	260	682	189.5	62.17	45.12	72.57	72.6	
15	739	204	743	150.5	52.63	39.04	74.18	74.3	
16	766	183	773	137.5	48.94	37.28	76.17	76.3	
17	739	168.5	737	114	43.47	29.33	67.47	66.4	
18	755	101.5	753	72	26.75	18.93	70.74	70.4	
19	726	112.5	722	81	28.51	20.42	71.61	71.2	
20	716	105.5	710	73	26.37	18.09	68.61	67.8	
							Mean	70.2	
21	722	33	684	28	8.32	6.69	81.1		
22	715	81.5	715	65	20.37	16.22	79.7	79.1	
23	715	132	714	102	32.95	25.42	77.2	76.0	
24	723	138.5	723	107	34.96	27.01	77.3	76.2	
25	715	159	715	120.5	39.69	32.32	81.4	81.1	
26	741	167.5	743	128	43.33	33.20	76.6	76.0	
27	702	230	711	172	56.61	42.69	75.4	74.5	
28	706	225	715	169	55.45	42.18	76.0	75.3	
							Mean	76.9	

Observations Nos. 9, 10, 14, 15, 16, where power transmitted exceeded 30 h.p., yield mean efficiency 73.9 per cent.

—Prof. Amsler regards as rather high. Since, however, the speed of the motors remained practically constant during the trials—increasing a little with augmented resistance in the exterior circuit—and deviated little from the speed of the generator, provided the latter was driven at a uniform rate, it appears hardly advisable to try to reduce the speed

Digitized by Google

for the sake of questionable improvements. Prof. Amsler acknowledges further the excellent provision by means of automatic short circuiting devices against too strong currents; and finally dwells upon the remarkably high efficiency realized, which is scarcely likely to be surpassed.

We must bear in mind that the percentages indicate commercial efficiencies, as they represent the ratio of power yielded to power expended, both measured mechanically. The performances of electric machines have been calculated in so many different manners, that it may not be superfluous to set this point clear. The tests of November 29, yielded a mean efficiency of over 70 per cent.; Mr. Brown's previous tests of November 29, gave a mean of 76.9 per cent. This difference requires an explanation; and the reason is pretty apparent. On November 22, both primary generators worked with approximately equal power, hence the differential current in the central wire of the three wire connection was almost zero, and the loss of energy consequently a minimum. On November 29, however, these powers differed very considerably, in some cases by even more than 100 per cent.; a glance at the columns z_1 and z_2 of table i. will establish this; table ii. gives the means, and therefore does not permit any conclusions as to the different working conditions. Heavier currents could not but result under these circumstances; hence the lower efficiency. We have above referred to M. Marcel Deprez's experiments and their maximum mechanical yield of 44.8 per cent. Of course, M. Deprez's line was much longer and had a resistance ten times as great, nearly 100 ohms. As his current was 9.8 amperes, his line absorbed almost 13 h. p. out of the 86 indicated by the dynamometer at the generator; M. Deprez had only one generator, a powerful Gramme dynamo giving a current of 6,000 volts. It will be interesting to mention for comparison the experiments on the electrical transmission of power by M. Hippolyte Fontaine, the results of which were, like those of M. Deprez, presented to the Paris Académie and published in the *Comptes Rendus*. The data of the two tests were almost the same, M. Fontaine also transmitting his currents of 6,000 volts and 9.34 amperes over a line of 100 ohms resistance; but M. Fontaine's experiments resemble more those of Mr. Brown in one respect, as M. Fontaine had four dynamos in series as generators and three in series as motors, similar to the two generators in series and the two motors in series of Mr. Brown. In M. Fontaine's line almost 12 h. p. were lost out of 96 h. p. supplied to the generator; his industrial yield was 52 per cent. If we make the same calculation with regard to the power absorbed by the line in Mr. Brown's tests, we find (in No. 14) with a current of 15 amperes and a line of 10 ohms resistance, a loss of about 3 h. p. against 62 h. p. measured at the generators. But it would, of course, be incorrect to deduct 13 per cent., which were expended in overcoming the resistance of M. Fontaine's line, for the Oerlikon case, and to calculate thus an efficiency of over 64 per cent. for the Brown dynamo when working over a line of M. Fontaine's length, since the whole conditions would be altered, and since the dynamos were not constructed for a line of 100 ohms resistance. But the comparison speaks very favorably for Mr. Brown's dynamos, particularly if we consider that the tests, when the power transmitted exceeded 30 h. p., that is, when they corresponded to the actual conditions for which the plant was designed—tests Nos. 9, 10, 14, 16—demonstrated a mean efficiency of 73.9 per cent. These are the experiments which were alluded to during the recent discussion of Mr. Sturgeon's paper before the Liverpool Engineering Society.

EQUIVALENTS OF UNITS OF MEASUREMENT.

CARL HERING.

The numbers in these tables have been calculated from the fundamental standard equivalent of the meter in inches, and the gram in grains, as given in the table. Also from the value of the avoirdupois and troy (apothecary's) pound in grains, the gallon in cubic inches, atmospheric pressure in millimeters, and specific gravity of mercury, all, as given in the tables. The values for the weights and volumes of water are based on the metric system. The vulgar fractions are the simplest fractions, that is, consisting of the fewest digits, which have, within a few per cent., the same value as the more accurate decimal fraction. Most of the vulgar fractions are within two per cent. of the correct value, a few are slightly above two per cent. In almost all cases the reciprocals of values are given, thus enabling all calculations to be made by multiplication instead of division. All the figures have been carefully checked by two independent methods, and it is believed that there are no errors.

Units. (In order of size.)	Equivalents.		Approximate values, within a few per cent.	Logarithms.
Lengths.				
1 mil	= .025400	millimeters	$\frac{1}{40}$	$\bar{2}$.404 8259
"	= .001	inch	$\frac{1}{1000}$	$\bar{3}$.000 0000
1 millimeter	= 39.3708	mils	40	1.595 1741
"	= .039371	inch	$\frac{1}{25}$	$\bar{2}$.595 1741
1 centimeter	= .393708	inch	$\frac{2}{5}$	$\bar{1}$.595 1741
1 inch	= 2.53995	centimeters	$2\frac{1}{2}$	0.404 8259
1 foot	= .30479	meter	$\frac{1}{3}$	$\bar{1}$.484 0071
1 yard	= .91438	meter	1	$\bar{1}$.961 1284
1 meter	= 39.370790	inches	40	1.595 1741
"	= 3.280899	feet	$3\frac{1}{3}$	0.515 9929
"	= 1.09363	yards	1	0.038 8716
1 kilometer	= 3280.899	feet		3.515 9929
"	= 1093.633	yards		3.038 8716
"	= .62138	mile	$\frac{5}{8}$	$\bar{1}$.793 3590
1 mile	= 5280.	feet		3.722 6339
"	= 1760.	yards		3.245 5126
"	= 1609.31	meters		3.206 6410
"	= 1.60931	kilometers	$1\frac{5}{8}$	0.206 6410
"	= .86838	geog. or naut. mile	$\frac{7}{8}$	$\bar{1}$.938 7098
1 geog. or naut. mile	= 6080.27	feet		3.783 9229
Surfaces.				
1 sq. mil	= .00064514	sq. millimeters		$\bar{4}$.809 6518
"	= .000001	sq. inch		$\bar{6}$.000 0000
1 sq. millimeter	= 1550.1	sq. mils		3.190 3482
"	= .001550	sq. inch		$\bar{3}$.190 3482
1 sq. centimeter	= .15501	sq. inch	$\frac{1}{6}$	$\bar{1}$.190 3482
1 sq. inch.	= 6.4514	sq. centimeters	$6\frac{1}{2}$	0.809 6518
1 sq. decimeter	= 15.501	sq. inches	$15\frac{1}{2}$	1.190 3482
"	= .10764	sq. foot	$\frac{1}{9}$	$\bar{1}$.031 9858
1 sq. foot	= 929.00	sq. centimeters		2.968 0142
"	= 9.2900	sq. decimeters	$9\frac{1}{4}$	0.968 0142
1 sq. yard	= .83610	sq. meter	$\frac{5}{6}$	$\bar{1}$.922 2568
1 sq. meter	= 10.764	sq. feet	$10\frac{3}{4}$	1.031 9858
"	= 1.1960	sq. yards	$1\frac{1}{5}$	0.077 7432
1 are	= 100.	sq. meters		2.000 0000
1 acre	= .40467	hectare	$\frac{2}{5}$	$\bar{1}$.607 1020
"	= .0040467	sq. kilometer		$\bar{3}$.607 1020
1 hectare	= 10000.	sq. meters		4.000 0000
"	= 2.4711	acres	$2\frac{1}{2}$	0.392 8980
1 sq. kilometer	= 247.11	acres		2.392 8980
"	= .38612	sq. mile	$\frac{3}{8}$	$\bar{1}$.586 7180
1 sq. mile	= 640.	acres		2.806 1800
"	= 2.5899	sq. kilometers	$2\frac{5}{8}$	0.413 2820
If d is the diameter of a circle, the area in other units is:				
If d is in mils, area in sq. millimeters	$= d^2 \times .000\ 506\ 69$			$\bar{4}$.704 7413
d in millimeters, area in sq. mils	$= d^2 \times 1\ 217.4$			3.085 4377
d in centimeters, area in sq. inches	$= d^2 \times .121\ 74$			$\bar{1}$.085 4377
d in inches, area in sq. centimeters	$= d^2 \times 5.066\ 9$			0.704 7413
Volumes.				
1 cub. centimeter	= .061027	cub. inch	$\frac{1}{16}$	$\bar{2}$.785 5923
"	= .033816	fluid ounce	$\frac{1}{30}$	$\bar{2}$.529 1203
"	= .0021135	pint		$\bar{3}$.325 0003
1 fluid drachm	= 3.6965	cub. centimeters	$3\frac{3}{4}$	0.567 7897
"	= .22559	cub. inch	$\frac{2}{9}$	$\bar{1}$.353 3120
1 cub. inch	= 16.386	cub. centimeters	$16\frac{1}{2}$	1.214 4777
"	= .55411	fluid ounce	$\frac{5}{9}$	$\bar{1}$.743 5980
"	= .034632	pint	$\frac{1}{30}$	$\bar{2}$.539 4780
"	= .016386	liter	$\frac{1}{60}$	$\bar{2}$.214 4777
1 fluid ounce	= 29.572	cub. centimeters	30	1.470 8797
"	= 8	fluid drachms		0.903 0900
"	= 1.8047	cub. inches	2	0.256 4020
1 pint	= 473.15	cub. centimeters		2.674 9997
"	= 28.875	cub. inches	$28\frac{1}{2}$	1.460 5220
"	= 16.	fluid ounces		1.204 1200
"	= .47315	liters	$\frac{1}{2}$	$\bar{1}$.674 9997
1 quart	= 946.30	cub. centimeters		2.976 0297
"	= 57.7500	cub. inches		1.761 5520
"	= .94630	liter	1	$\bar{1}$.976 0297
"	= .033420	cub. foot	$\frac{1}{30}$	$\bar{2}$.524 0084
1 liter	= 1000.	cub. centimeters		3.000 0000
"	= 61.027	cub. inches		1.785 5223
"	= 2.1135	pints	$2\frac{1}{8}$	0.325 0003
"	= 1.0567	quarts	1	0.023 9703
"	= .26419	gallon	$\frac{1}{4}$	$\bar{1}$.421 9103
"	= .035317	cub. foot	$\frac{1}{28}$	$\bar{2}$.547 9787
1 gallon	= 3785.2	cub. centimeters		3.578 0897
"	= 231.0000	cub. inches	$230\frac{1}{2}$	2.363 6120
"	= 3.7852	liters	$3\frac{3}{4}$	0.578 0897
"	= .13368	cub. foot	$\frac{1}{8}$	$\bar{1}$.126 0683
"	= .037852	hectoliter	$\frac{1}{26}$	$\bar{2}$.578 0897
1 cub. foot	= 28815.3	cub. centimeters		4.452 0213
"	= 29.922	quarts	30.	1.475 9916
"	= 28.3153	liters	$28\frac{1}{2}$	1.452 0213

Digitized by Google

Units. (In order of size.)		Equivalents.	Approximate values, within a few per cent.	Logarithms.
Volumes.—*Continued.*				
1 cub. foot	= 7.4805	gallons	15/2	0.873 9317
"	= .28315	hectoliter	1/3	T.452 0213
"	= .028315	cub. meter	1/35	T.452 0213
1 hectoliter	= 105.67	quarts	100	2.023 9703
"	= 100.	liters	100	2.000 0000
"	= 26.419	gallons	25	1.421 9108
"	= 3.5317	cub. feet	3 1/2	0.547 9787
1 cub. yard	= 201.97	gallons	200	2.305 2955
"	= .76451	cub. meter.	3/4	T.883 3852
1 cub. meter	= 264.19	gallons	250	2.421 9103
"	= 35.317	cub. feet	35	1.547 9787
"	= 1.3080	cub. yards	1 1/3	0.116 6148
1 stere	= 1.	cub. meter		0.000 0000
Weight.				
1 milligram	= .015432	grain	1/65	T.188 4820
1 grain	= 64.799	milligrams	65	1.811 5680
1 gram	= 15.43235	grains	15	1.188 4820
"	= .035274	ounce avdp.	1/30	T.547 4539
"	= .032151	ounce troy	1/30	T.507 1908
1 ounce avdp.	= 437.50	grains	440	2.640 9781
"	= 28.3495	grams	28 1/2	1.452 5461
"	= .91146	ounce troy	1	T.959 7869
1 ounce troy	= 480.	grains		2.681 2412
"	= 31.1035	grams	31.	1.492 8092
"	= 1.0971	ounces avdp.	1 1/10	0.040 2631
1 pound troy	= 5760.	grains		3.760 4225
"	= 12.	ounces troy		1.079 1812
"	= .82286	pound avdp.	4/5	T.915 3245
"	= .37324	kilogram	3/8	T.571 9905
1 pound avdp.	= 7000.	grains		3.845 0980
"	= 16.	ounces avdp.		1.204 1200
"	= 1.2153	pounds troy	1 1/4	0.084 6755
"	= .45359	kilogram	1/2	T.656 6660
1 kilogram	= 35.274	ounces avdp.	35 1/2	1.547 4539
"	= 2.2046	pounds avdp.	2 1/4	0.343 3340
1 net or short ton	= 2000.	pounds avdp.		3.301 0300
"	= .90719	metric ton	9/10	T.957 6960
"	= .89286	long ton	8/9	T.950 7820
1 metric ton	= 2204.62	pounds avdp.		3.343 3340
"	= 1.1023	short tons	1 1/10	0.042 3040
"	= .98421	long ton	1	T.993 0860
1 gross or long ton	= 2240.	pounds avdp.		3.350 2480
"	= 1.1200	short tons	1 1/9	0.049 2180
"	= 1.01605	metric tons	1 1/80	0.006 9140
Weights and Lengths.				
1 lb. per mile	= .28185	klgr. per kilometer	2/7	T.450 0250
"	= .11048	grain per inch	1/9	T.043 2829
"	= .0028185	gram per centimeter	1/355	T.450 0250
1 klgr. per kilomet.	= 3.5479	lbs. per mile	3 1/2	0.549 9750
"	= .39197	grain per inch	2/5	T.593 2579
"	= .01000	gram per centimeter	1/100	T.000 0000
1 gram per inch	= 9.0514	lbs. per mile	9.	0.956 7171
"	= 2.5512	klgs. per kilometer	2 1/2	0.406 7421
"	= .025512	gram per centimeter	1/39	T.406 7421
"	= .0025512	klg. per meter	1/392	T.406 7421
"	= .0017143	lb. per foot	1/583	T.234 0832
1 gram per centimet.	= 354.79	lbs. per mile	350	2.549 9750
"	= 100.000	klgs. per kilometer		2.000 0000
"	= 39.197	grains per inch	40	1.593 2579
"	= .10000	klg. per meter		T.000 0000
"	= .067196	lb. per foot	1/15	T.827 3411
1 klg. per meter	= 391.97	grains per inch	400	2.593 2579
"	= 10.	grams per centimeter		1.000 0000
"	= .67196	lb. per foot	2/3	T.827 3411
1 lb. per foot	= 583.33	grains per inch		2.765 9168
"	= 14.882	grams per centimeter	15	1.172 6589
"	= 1.4882	klgs. per meter	1 1/2	0.172 6589
Weights and Surfaces (Pressures).				
1 lb. per sq. inch	= .068044	atmosphere	1/15	T.832 7894
"	= .070310	klgr. per sq. centimeter	1/14	T.847 0142
1 klgr. per sq. centim.	= 14.223	lbs. per sq. inch	14	1.152 9858
"	= .96778	atmosphere	1	T.985 7752
1 atmosphere	= 760	millimeters of mercury col.		2.880 8136
"	= 33.901	feet water column	34	1.530 2177
"	= 29.922	inches of mercury column	30.	1.475 9877
"	= 14.696	lbs. per sq. inch	14 1/2	1.167 2106
"	= 10.333	meters water column	10	1.014 2248
"	= 1.0333	klgs. per sq. centimeter	1	0.014 2248
sp. gr. of mercury	= 13.596		13 1/2	1.133 4112
Weights and Volumes.				
1 grain per cub. inch	= .24686	lb. per cub. foot	1/4	T.392 4457
"	= .0089545	gram per cub. centimeter	1/111	T.597 0903
1 lb. per cub. foot	= 4.0509	grains per cub. inch	4	0.607 5543
"	= .016019	gram per cub. centimeter	1/62	T.204 6447
"	= .016019	klgr. per liter	1/62	T.204 6447
1 gram per cub. c. m.	= 252.88	grains per cub. inch.	1/4	2.402 1097
1 gram per cub. c. m.	= 62.425	lbs. per cub. foot	1/16	1.795 3553
1 klgr. per liter	= 62.425	lbs. per cub. foot	1/16	1.795 3553
"	= 2.0862	lbs per quart	2	0.319 3637
1 lb. per quart	= .47933	klgr. per liter	1/2	T.680 6363
1 lb. per cub. inch	= .027681	klgr. per cub. c. m.	1/36	T.442 1883
1 klgr. per cub. c. m.	= 36.125	lbs. per cub. inch	36.	1.557 8117

Units. (In order of size.)		Equivalents.	Approximate values, within a few per cent.	Logarithms.
Weight of Water. K.				
1 cub. c. m. water weighs	15.432	grains	15.	1.188 4320
"	1.	gram	1	0.000 0000
1 cub. inch weighs	252.88	grains	1/4	2.402 9097
"	16.386	grams	16	1.214 4777
"	.036125	pound	1/28	T.557 8117
1 quart weighs	2.0862	pounds	2	0.319 3637
"	.94630	kilogram	1	T.976 0297
1 litre weighs	2.2046	pounds	2 1/4	0.343 3340
1 cub. foot weighs	62.425	pounds	62 1/2	1.795 3553
"	28.3153	kilograms	28 1/2	1.452 0213
1 cub. yard weighs	1685.5	pounds	1700	3.226 7192
"	764.51	kilograms		2.883 3852
1 cub. metre weighs	2204.6	pounds		3.343 3340
M.				
1 pound water measures	453.59	cub. centimeters		2.656 6660
"	27.681	cub. inches	28	1.442 1883
"	.47933	quarts	1/2	T.680 6363
"	.45359	liter	1/2	T.656 6660
"	.016019	cub. foot	1/62	T.204 6447
1 klgr. water measures	61.027	cub. inches	61	1.785 5223
"	1.0567	quarts	1 1/16	0.023 9703
"	1	liter	1	0.000 0000
"	.035317	cub. foot	1/28	T.547 9787

The weight of a given volume of any other material, whether solid or liquid, is its specific gravity multiplied by the factor *K*. The volume of a given weight of any other material, is the factor *M* divided by its specific gravity.

Velocities.				
1 foot per second	= .30479	meter per second	3/10	T.484 0071
"	= .018288	klmet. per minute	1/55	T.262 1583
"	= .011364	mile per minute	1/88	T.055 5173
1 meter per second	= 3.280899	feet per second	3 1/3	0.515 9929
"	= .0600	klmet. per minute	1/16	T.778 1513
"	= .037283	mile per minute	1/27	T.571 5102
1 kilometer per minute	= 54.682	feet per second	55.	1.737 8417
"	= 16.667	meters per second	16 2/3	1.221 8487
"	= .62138	mile per minute	5/8	T.793 3590
1 mile per minute	= 88.00	feet per second		1.944 4827
	26.822	meters per second	27	1.428 4898
	1.60931	klmet. per minute	1 2/3	0.206 6410

DUPLEX TELEPHONY.[1]

BY DR. A. M. ROSENBRUGH.

In this paper I desire to call the attention of the members of the Institute to some recent advances that have been made in the direction of duplexing telephone lines. It is now ten years since the telephone was introduced, but it is only quite recently that attention has been directed to duplex telephony. Duplex telephony seems to be adapted to long-distance telephony only. In long-distance telephony the best results are obtained when two wires are used, one wire being used as a return wire,—the two wires forming what is called a metallic circuit. The wires used for this purpose require to be first-class conductors. They are now made of copper. This necessarily very much increases the cost of long-distance telephone lines, firstly because copper wire is expensive and secondly because two wires instead of one are used.

Hence any means or device that will increase the working capacity of telephone trunk lines will proportionately decrease the cost of long-distance communication by telephone.

When I took up this question a little over two years ago, my object was to use the metallic circuit or double wire trunk line system connecting two telephone exchanges so that either two telephone subscribers, or a telephone subscriber and a central office operator at each end of the metallic circuit could communicate simultaneously without interference. In order to accomplish this I found that there were two problems to solve, firstly, how to render the central office receiving telephones neutral to the subscribers' transmitters, and secondly, how to render the

1. Read before the Canadian Institute, January 8th, 1887.

Digitized by Google

subscribers' receivers neutral or irresponsive to the central office transmitters.

The solution of the first problem was not attended with any great difficulty. The plan adopted was as follows, namely: At each central office and at each end of the metallic circuit a subscriber's line was attached. Instead of using the ordinary telephone receiver with a single coil, a telephone with a double coil was used and instead of inserting said coil in a single branch of the metallic circuit, one coil was inserted in one branch and the other coil in the other branch of the metallic circuit and the connections were made so that electrical currents traversing one coil would be neutralized by the electrical currents traversing the other coil. Speaking technically, the coils were connected differentially. The electrical currents generated by the subscribers' transmitters passed through the two coils in opposite directions and consequently neutralized each other. Hence while two subscribers, one at each end of the metallic circuit, were using the line nothing would be heard in the central office telephones.

The first problem having been solved I was encouraged to attempt the solution of the second, namely, how to render the subscribers' telephones neutral to the central office transmitters. This was found to be a difficult problem. It was obvious that if the transmitters were placed in either branch of the metallic circuit, the electrical currents generated by said transmitters would divide at the junction of the subscribers' lines and a portion of said currents would escape to ground through the subscribers' telephones. Without stopping to enumerate the different expedients resorted to, I finally saw that the only solution to the problem was to arrange the central office transmitters so that both branches of the metallic circuit would be charged equally, simultaneously, and in opposite directions. By charging one wire positively and the other negatively at the same time, I saw that the electrical equilibrium between the two wires could be disturbed without affecting the equilibrium of the subscribers' lines. Fortunately after many and various experiments, the means for accomplishing this were discovered, and the problem was finally solved.

I also discovered that this can be accomplished in several ways. I will call your attention to but two of these. The first of these methods is to use a transmitter with two induction coils, the primary coils being connected either in series or in multiple arc, and the secondary coils being connected in circuit, the one in one branch of the metallic circuit and the other in the other branch of the metallic circuit. In the second method repeating coils are used with one coil in each branch of the metallic circuit, said coils being connected with each other and also with an independent telephone circuit.

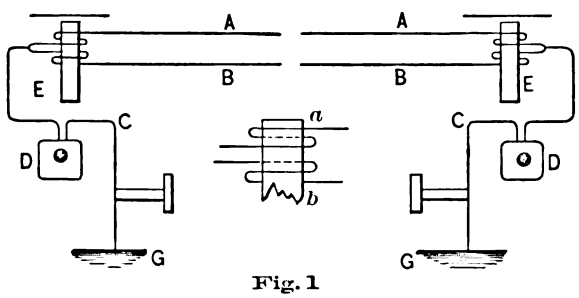

Fig. 1

In figure 1 A. A and B. B. are two branches of a metallic circuit, and C. C'. are two subscribers' lines attached thereto. D. and D', subscribers' transmitters, and E. E. are receiving telephones at two central offices at each end of the metallic circuit respectively. The telephones E. E. have two coils, *a* and *b*, the former connected with wire A. and the latter with wire B. These coils are connected differentially, and the telephones are neutral to the subscribers' transmitters.

In the first method the operation is as follows: The voice impulse vibrates the diaphragm of the transmitter, this varies the strength of the local battery circuit traversing the primary coils of the two induction coils, this generates secondary currents in the two secondary coils, and this in turn generates electrical currents in the two branches of the metallic circuit, and if the two coils are properly balanced, electrical impulses are generated in each branch of the metallic circuit equally and simultaneously, and if the connections are properly made, these electrical impulses traverse the metallic circuit in opposite directions, the currents generated in one coil being reinforced by the currents generated in the other coil.[1] I might mention here, in passing, that the converse is also true, namely, if the connection of one of the coils be reversed, the currents generated by one coil will be opposed by those of the other, and no current will traverse the metallic circuit, the currents will meet, however, at the subscribers' lines, and, being reinforced, will proceed to "ground" through the subscribers' telephones. Advantage may be taken of this fact and two sets of transmitters may be used at the central office or at any point in the metallic circuit, and they may be connected in such a manner that the subscribers' telephones will be responsive to one and neutral to the other.

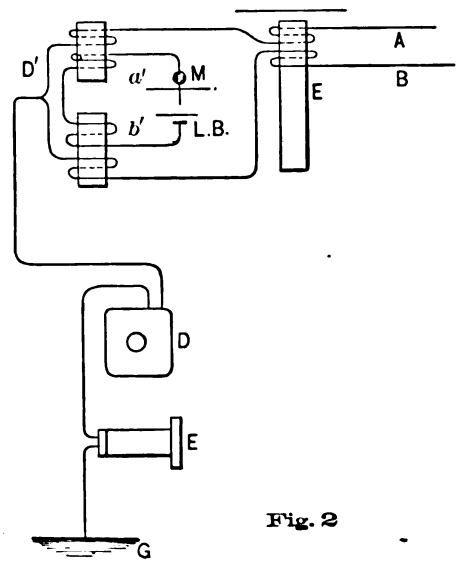

Fig. 2

In figure 2 A. and B. are the two branches of a metallic circuit at one end of a telephone trunk line. C. is a subscribers' line, and E. a receiving telephone in said subscribers' line. D'. is a transmitter with two induction coils at the central office. The secondary coil of coil *a'* is in circuit with wire A. and the secondary coil of coil *b'* is in circuit with wire B. M. is a microphone, and L. B. the local battery connected with the primary coils of *a'* and *b'*. E. is the differentially wound receiving telephone at the central office.

Preferably, however, I would give the subscriber both a return wire and a ground wire, and, preferably, two installations of telephonic apparatus; one a single installation for ordinary use, and the other an installation of duplex apparatus for long-distance telephoning on the metallic circuit.

When repeating coils are used for charging the two branches of the metallic circuit, said branches are charged indirectly through said repeaters. I am aware that there is nothing new in using repeating coils in telephone circuits, but, so far as I am aware, they have never been used as here described nor with the same object in view, namely, to actuate and to be actuated by both branches of a metallic circuit simultaneously. The advantage of using repeaters, as here indicated, is to enable two subscribers at each end of the metallic circuit to communicate simultaneously without interference, one subscriber using a line

1. Adjustable cores are used in connection with the two induction coils for the purpose of balancing, in case the two branches of the metallic circuit are not perfectly balanced.

Digitized by Google

connecting directly with the metallic circuit, and the other subscriber using a line connecting indirectly by means of the two repeating coils. Hence by a combination of these two methods it will be seen that either two subscribers or one subscriber and a central office operator at each end of a metallic circuit may communicate simultaneously without interference.

One important advantage resulting from this arrangement remains to be named, namely, the subscribers have the advantage of two conductors instead of one. This reduces the resistance of the line one-half, and must necessarily very much improve the working of long-distance telephone lines. This idea may be extended as follows: Two metallic circuits may be connected at each end so as to form a third metallic circuit. This third metallic circuit may contain duplex central office telephonic apparatus and form a connection with a subscriber's line as well. This would give the subscriber the benefit of four conductors. The four trunk lines would be formed into three metallic circuits, and three repeating circuits could be used. In other words, the four wires would admit of four subscribers at each end of the line using the same wires simultaneously.

In August, 1885, I communicated my duplex telephone system to Prof. S. P. Thompson, of the Finsbury Technical Institute, London, England, and, through his advice and kind offices, a patent was taken out in Great Britain. An application was also filed at Washington. I submitted my system to the American Bell Telephone Co. in May last, but I have not learned whether it has as yet been put in practical operation. In the meantime two claimants have made their appearance, namely, one J. J. Curry and one J. A. Barrett, the former an employé of the New England Telephone Co., and the latter an employé of the New York Telegraph and Telephone Co., both under the control of the Bell company. One claims the arrangement of the differentially wound apparatus, and the other the arrangement of the repeating coils.

I will conclude this paper by giving two extracts from the New York *Electrical World* bearing upon the subject. The first appeared July 31st, or about two months after my system was submitted to the Bell Telephone Co. It says:—

The great expense attending the construction of copper lines for long-distance telephony has naturally led those engaged in solving the long-distance problems to seek means for increasing the capacity of the wires. The steps to be taken are analogous to those adopted in the case of the telegraph, where the duplex and quadruplex have greatly increased the value of the lines. It is not hard to believe the report, therefore, that the American Telephone and Telegraph Co., a description of whose lines between New York and Philadelphia we gave lately, is now undertaking experiments with the object of duplexing its wires, and thus practically doubling their capacity and utility. Several methods of duplexing telephone lines have already been proposed and have been the subject of discussion and trial among telephonists, but they have not come into use, in this country at least. The delay has been due probably to a lack of necessary incentive, such as the long-distance service now furnishes. While the difficulties to be overcome in the duplexing of telephone lines are greater than with the telegraph, it is safe to say that satisfactory results will in time be attained. We understand that the work in the present instance is in highly competent hands, and even now gives excellent promise of developments scarcely hoped for.

The second notice appeared October 23d last, and reads as follows:—

The telephone lines connecting New York and Philadelphia, recently erected by the American Telephone and Telegraph Co., of this city, have already been described in our columns. It was evident to all interested that lines running parallel for over 100 miles would suffer from induction if the ordinary "grounds" were employed: hence complete metallic circuits of hard-drawn copper wire were erected, through which the articulation obtained, as we have ourselves tested, leaves nothing to be desired. It becomes manifest, however, that the erection of a double circuit is accompanied by a considerable increase in the cost of construction. Hence it is but natural for the company to seek in some way to increase the capacity of its lines, but still to retain the advantages of the metallic circuit.

The duplexing of these telephonic circuits was, therefore, undertaken by Mr. John A. Barrett, of Brooklyn, who has succeeded in devising a system which, broadly stated, *consists in bringing the metallic or double-wire instruments at the terminal stations into inductive relation, by means of converting or repeating coils, with both sides of the circuit.*

The question of priority of invention will be decided by the United States patent office, and I doubt not due justice will be done in the premises.

DYNAMIC ELECTRICITY.

BY CARL HERING.

(Continued from page 148.)

CHAPTER VII.—FIELD MAGNET FRAMES (CONTINUED).

THE application of the formulæ just given may be illustrated as follows: Suppose the magnets of a dynamo which has been tested, were found to be over-saturated too much, and it is desired to construct a new frame for this machine in which they were not to be over-saturated. By the tests which will be described in a subsequent chapter, find what the magnetism must be for the proper load of the machine when the magnets are over-saturated; call this m. It is not necessary to know the actual number of lines of force but merely a number which is proportional to it, such for instance, as the potential in volts measured on open circuit, with the magnets excited to the required degree of magnetization. Make another test to determine the magnetism in the magnets (or the potential on open circuit) when they are just saturated; call this n, and let the number of ampere turns required in this case be c. From n and the area of cross-section of the core, find, by dividing the former by the latter, what the intensity of magnetization per square inch is, just at saturation. If the number of volts has been used instead of the number of lines of force, the number thus obtained for the intensity, will by itself mean nothing, but it will nevertheless, be proportional to the intensity per square inch, and can be used in the further calculations. This intensity is what may be allowed in the new magnets. Dividing the required magnetism m by this allowable intensity, will give the area of cross-section which the new magnets must have in order not to be over-saturated, the quality of the iron being supposed to be the same. From this new area find the diameter, and call it D_1, the old diameter being indicated by D. It then remains to find what the new ampere turns must be in order to develop this intensity. From the formula for the value of I it is evident that if the intensities in two cases are the same the ratios of the ampere turns (c) to the diameter will be the same in the two cases, that is,

$$\frac{c}{D} = \frac{c_1}{D_1}$$

in which c_1 represents the ampere turns required for the new magnets. As the ampere turns c of the old magnets when just saturated, and the old and new diameters D and D_1 are known, the value of the new ampere turns c_1 is readily determined; it will be

$$c_1 = \frac{c}{D} D_1.$$

Owing to some small errors which are involved, these calculations will not be exact, but they will serve very well as a guide.

From this new number of ampere turns and from the dimensions of the old magnets, it can readily be calculated whether the new magnets must be made longer, or whether they may be still shorter. To illustrate this, suppose the old magnets showed no signs of heating when they were being run just at saturation, developing the magnetism which was indicated by n. This would show either that more electrical energy may be used for the magnet coils (*i. e.* for a shunt machine thicker wire could be used, or for a series machine thinner wire), or that the heat radiating or external surface of the whole coil (not of the wire itself) may

Digitized by Google

be smaller, and as the diameter of the coil is larger it shows that the length of the coil could be less. Knowing the periphery of the core, the size of the wire, and the number of ampere turns, and assuming a certain thickness or depth of coil, the length of core necessary to contain this wire can readily be calculated. This subject of the winding of magnets and length of core will be further discussed in the next chapter.

The types of field magnet frames now in common use and having only two active poles, may be divided into the four following general classes, shown in figures 25, 26, 27, and 28, in which the coils are marked *m*. They are classified here with reference to the relative position of the magnets proper, their pole pieces and their yoke pieces. Any other modifications of these general types are considered as details which do not effect the general classification.

The form shown in figure 25, consisting of a single U magnet with two coils, is probably the oldest type. It was used in the old machines of Wilde and Pacinotti. It is the form used at present in the Edison, Hopkinson and Jurgensen machines, and when the yoke piece is also covered by the coils it is the form used in the Sir Wm. Thompson and the Mather machines. For the same amount of magnetism in the armature field, the only advantage in covering the yoke piece with coils, is a slight saving of iron and of wire, as it is evidently a more economic disposition of the wire and iron, but it is accompanied by increased difficulties in winding. The type shown in figure 25, is better adapted for Gramme ring armatures than for cylinder armatures, as the field is not always perfectly balanced, being stronger on that side of the armature nearest the yoke piece. The difference may, however, be made very slight.

Fig. 25

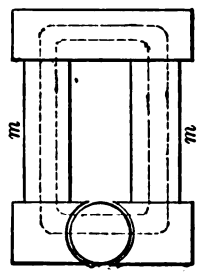

Fig. 26

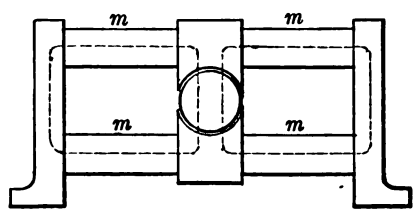

Fig. 28

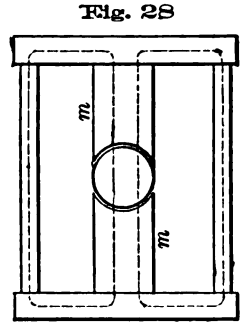

Fig. 27

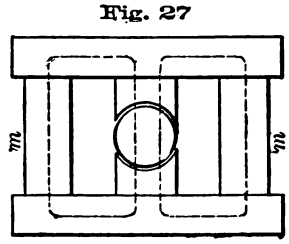

The more common type, shown in figure 26, consists of two U magnets with their like poles together. For the same magnetism in the armature, the cores and yoke pieces need be only about half as large in cross-section, as they would have to be in figure 25, as the lines of force, shown in dotted lines, divide evenly between the two U magnets. The quantity of wire being approximately the same, the length of the cores could be made somewhat shorter than in the type shown in figure 25, thus shortening the path of the lines of force and therefore the magnetic resistance offered by the iron. As it is desirable to have this magnetic resistance as small as possible, this feature of shorter circuits is an advantageous one. The field may evidently be perfectly balanced. This type is the most common, being used in the old and new Gramme machines, the Weston, Brush, Siemens, Maxim, Burgin, Crompton, Patterson-Cooper, Kapp, Jenney, Western Electric, Daft, Ball, Schuyler, Clark, Wood, Heinrichs, Knowles, Westinghouse, Consolidated company, and no doubt numerous others.—When the yoke pieces are likewise covered with coils, this type includes the Ewell-Parker frame.

The type shown in figure 27 is closely allied to this one, the two coils of each U magnet being combined together into one, and placed on what is the yoke piece in figure 26. Comparing it with figure 25, it will be seen that the lines of force generated by one coil in figure 27, do not have to pass through the other coil, as they do in figure 25, and therefore the cores can be made smaller, each coil saturates only its own core and not that of the other coil. If this were the only thing to be taken into consideration, the cores in figure 27 need be only half as large in cross-section as those in figure 25. The length of wire required will, however, affect this dimension on account of the limited length of the cores which, in this type is dependent on the size of the armature and other dimensions. Comparing it with figure 26, it has the advantage of having only two coils instead of four smaller ones. The circuit of the lines of force and therefore the magnetic resistance, may also in many cases be made smaller in figure 27 than in figure 26 ; there would probably also be a saving of iron. The objection to this form is, that, unless the distance from the pole-piece to the coils is quite large, many of the lines of force will leak directly back into the cores, and as these do not pass through the armature they are wasted. This type is used in the McTighe, Hopkinson, Griscom, and Joel machines.

The type shown in figure 28 may also be considered as two U magnets shaped like the path of the lines of force, as shown, with the coils around their common pole pieces. It has the same advantage in having only two coils, but unlike figure 27 they saturate each other's cores, as in figure 25. It generally has the disadvantage of having a very long circuit for the lines of force, it being considerably over four times the length of a coil ; this, however, is partially overcome by the fact that the coils may be made thicker and, therefore, shorter in this type than in the others. It is like figure 26 and 27 and unlike figure 25, in the feature that the field may be perfectly balanced. It is like figures 27 in the fact that there generally is great leakage of the lines of force from the pole pieces to the yoke pieces. Among the machines using this type are the Thomson-Houston, Van Depoele, Hochhausen, Kapp, and in general most multi-polar machines, as for instance, alternating current machines of the ordinary types.

Fig. 29

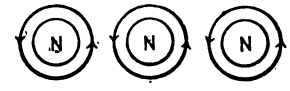

Fig. 30

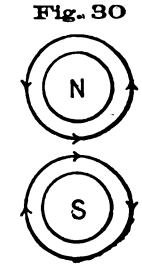

In some of the older forms of machines several small parallel magnets with common pole and yoke pieces were used in place of one larger magnet. The best known machines of this kind are the Edison "Jumbo" and the older Weston machines. Such magnets were, however, soon abandoned by the makers. They take up much more space and require a much larger amount of wire, the wire on those parts of parallel coils which face each other, being disposed so as to neutralize the magnetic effect of those

Digitized by Google

parts. This may be seen from figure 29 in which three such magnets are shown in cross-section; the current flowing around them as shown, it will be seen that the parts of the coils nearest each other tend to neutralize one another, as the neighboring currents are in the opposite direction, thereby destroying their magnetic effect. These portions of the wire are, therefore, inactive magnetically, being mere dead resistance. In such a composite magnet it can readily be shown that there are lines of force between the magnets running parallel to them, but in the opposite direction to the useful lines in the magnet cores. These are, of course, wasted, as they do not pass through the armature.

It is often supposed that two parallel magnets forming one U magnet as in figures 25 and 26, are subject to this same objection, and that, therefore, the coils should not be too near together. But this is not the case, it is on the contrary an advantage to bring them as near together as the nature of the frame will permit. This will be seen from figure 30, which shows the cross-section, perpendicular to the cores, of the two parts of one U magnet in figure 25 or 26. It will be seen that the currents in two neighboring wires of the two coils must be in the same direction, in order to develop the two opposite poles at the ends of the magnets. The currents in the upper half of the lower coil are, therefore, in the right direction to act with those in the upper coil to saturate the core N, and *vice versa*. In other words, each coil tends to saturate the core of the other coil, as described in another part of this chapter. It is, therefore, an advantage to bring such magnets quite close together, provided they are not so near as to allow the lines of force to leak directly from one to the other near the pole ends.

The shape of the pole pieces around the armature has already been discussed in the chapter on armatures. The air space between the pole pieces and the armature core should be made as large as possible in area, and as thin as practicable. It is not the case, as is sometimes claimed, that according to the law of inverse squares, the intensity of this field will be inversely as the square of the distance between the iron. That is a misinterpretation of the law. The field does become weaker as this thickness increases, but as Deprez has shown, this decrease in strength is much smaller than is generally supposed.

As described before, the pole-piece projections should not be too near to each other, and they should not be too near to any other iron parts on account of leakage. They should be rounded off on their outside edge to avoid the tendency to leakage from the sharp edges. It should be remembered that these projections are often the most intense parts of the field. It is probably an advantage to incline the edges of these projections instead of making them parallel to the axis, in order to cause the wire to enter the field gradually instead of suddenly.

For cylinder armatures, it is important to have the field well balanced magnetically, that is, to give it the same intensity per square inch throughout, or else to have it symmetrical with respect to the axis, on both poles. This is not so important for Gramme armatures, but it is essential for these and for most cylinder armatures to have the same number of lines of force in both pole pieces, and to have the wires cut them at the same speed, otherwise there may be local currents in the armature as described before. It is, therefore, necessary to avoid unsymmetrical leakage, as for instance, from one pole-piece through half the armature, and returning through the shaft and the single iron bearing support, back to the magnets; such lines are cut by only one side of the armature.

Accessory iron parts of the frame or base plates, should be as far removed from the pole pieces as possible, to avoid leakage. For the same reason braces or bearing supports should not be fastened to pole pieces, or else should be made of brass. If for convenience they are of iron and are fastened to the pole pieces, they should be symmetrical and be separated as far as possible from each other.

(*To be continued.*)

ELECTRICAL DISTRIBUTION BY ALTERNATING CURRENTS AND TRANSFORMERS.[1]

BY RANKIN KENNEDY.

I.—SYSTEMS.

The distribution of electric energy for electric lighting on a commercial scale is a problem which has not yet been practically solved; the chief difficulty in the way of wide and extensive distribution lies in the low potential necessary for the working of the present forms of lamps; 100 volts may be taken as the standard of pressure at which we now distribute electric energy on the small scale in isolated electric plants. The pressure being small a very large volume of current is required to convey a moderate amount of energy for distribution; large currents require large conductors, and when the question of distributing, say, 20,000 electric lamps of 16 candle-power each arises, we are at once met with the difficulty of laying main wires sufficiently large to convey the energy in the large volume of current necessary for this comparatively small number of lamps.

This difficulty in the way of direct supply at low pressure was early recognized by electric lighting engineers, and many proposals have from time to time been made to obviate the difficulty by distributing the energy at high pressure, and devices have been invented for reducing this high to a low pressure on the consumers' premises to suit the requirements of the low-pressure lamps.

One method, early proposed and put into practice by several inventors, is based upon the fact that alternating currents or intermittent currents of electric energy can be easily and economically converted or transformed from currents of high pressure and small volume to currents of low pressure and large volume and *vice versa* by means of induction coils.

This method is now attracting considerable attention and has met with considerable success in the hands of later inventors; a great many electricians are actively prosecuting enquiries into the construction and functions of the improved induction coils, and no doubt the subject deserves attention as a means of extending the development of electric lighting.

In these papers it is proposed to examine into all the proposals made and put into practice during the last 10 years, and thus obtain a knowledge of the history of this method of distribution by high-pressure alternating currents and induction transformers. The patent records may be taken as a very good history of any important electric system now in operation, and a short notice of each of the patents applied for during the last 10 years, together with a description of the systems now in practice, to be followed by a description and history of transformers, will, it is hoped, be interesting to electricians and others.

In 1877, Mr. P. Jablochkoff obtained a patent for a method of working electric lights by induction coils, to be actuated by an alternating current or by a continuous current, rendered alternating by a commutator or intermittent by an interruptor; this patent contains the elements of a system of distribution by induction coils, namely, a generator of alternating or intermittent currents—a main conductor forming a main circuit in which is placed any number of induction coils, and lamps or other translating devices placed in the secondary circuit of the induction coils. Apparently, Jablochkoff wanted a high-tension current in the secondary circuit for the working of his kaolin lamps, and, therefore, we may presume the secondary current employed by him was higher than the

1. From the *Electrical Review* (London).

Digitized by Google

primary in pressure, but this does not necessarily follow. The induction coils are placed in series order in the circuit.

C. W. Harrison, of London, obtained a patent, No. 3,470, 1878, for the use of induction currents for providing electric lights; this appears to be a series system similar to Jablochkoff's.

Patent No. 4,219, 1878, was granted provisionally to Sir C. Bright for a system of distribution by induction coils. This specification is very vague. In this patent we have the same elements as indicated in Jablochkoff's. A generator of alternating or intermittent currents—a main conductor to convey the current—induction coils at each point where the light is required.

Like Jablochkoff's, this system appears to have been designed to supply high-tension currents for the special high-tension lamps mentioned in the specification, there being no low-tension lamps in existence at the date of this patent. It must be admitted by electricians that this and Jablochkoff's system are equally competent to supply low-tension currents in the secondary circuit, and this is indicated in Bright's patent by the sentence, "The size and length of the primary wire and secondary wire coils are adapted to the number of lights employed."

Whether the induction coils are to be worked in parallel or series is not stated. "*They are connected to a metallic main conductor common to all.*" This may mean anything, but the use of the singular number—*a conductor*—would indicate a series order of connection to most electricians.

Patent No. 4,611, November, 1878, granted provisionally to Mr. Edmund Edwards and Alphonse Normandy, is a most important one.

This patent is quite clear and distinct. The elements of the most complete system of distribution by alternating currents and induction coils placed in series order in the circuit are clearly set forth in every detail, even to the working of a second induction coil from the secondary circuit of another coil in the primary circuit. As a system of distribution with the induction coils in series order we shall find that no improvement on the proposals made in this patent have been made by any subsequent inventors, and, therefore, this specification may be taken as a good description of the series system of working induction coils.

But, like all prior and subsequent proposals to work transformers in series order, it presupposes that there is no disturbing action in the transformers themselves, and no provision is made for regulation or independence of action in the transformers.

Patent No. 5,183, December, 1878, granted to J. B. Fuller, of New York, U. S. A., contains all the elements of a system of distribution by induction coils and alternating currents; in this patent we have for the first time a regulating device clearly indicated. "A pivoted arm regulates the light by strengthening or weakening the magnetic field."

Patent 5,257, December, 1878, granted to A. de Meritens, of Paris, is for a system very similar to that of Edwards and Normandy, and is quite complete as a series system of distribution although it makes no advance on the prior inventions.

The same system with the same features was again introduced in 1882 by Messrs. Gaulard and Gibbs. In the system described in the patent of these gentlemen we have all the elements arranged precisely as in the systems patented or described by Jablochkoff, Edwards and Normandy, Bright and de Meritens. The transformers are arranged in series order, fed from a high-tension dynamo supplying constant current and with a variable E. M. F.

In 1884 these same inventors patented the series system again; in this specification an attempt is made to prove that the transformers connected in series to the supply at constant current shall be self-regulating and act independently of each other if constructed according to the description given therein.

Whatever the value of the Gaulard and Gibbs systems as described in their specifications, these gentlemen promoted the application of the transformer to electric lighting by coming prominently before the public and undertaking electric lighting on their systems.

Their proposals were criticised by some, scoffed at by many, and altogether ignored by the majority of electricians; they, however, stuck to their colors and replied to criticisms in the *Electrical Review* of the time.

In June, 1883, these discussions drew out some letters in which I indicated the impossibility of self-regulation and independence being obtained in any system employing transformers in series order with constant current supply. For the first time the actual effects of counter E. M. F. were described, and the first letter concluded by stating that if transformers or secondary generators were connected in parallel order they then became beautifully self-regulating.

In the *Electrical Review* of that time a leading article on the subject appeared, in which it was prophesied that these conclusions of mine would be followed up by others. This prophesy was soon fulfilled by a patent being applied for by Max Deri and Carl Zipernowski, of Buda Pesth, in which the transformers are to be placed in parallel order; Messrs. Gaulard and Gibbs did not, however, take up this matter, for we find them with another patent, in 1884, for a series system of distribution.

The perception of the action of the counter forces in the transformers and the connection of them in parallel order to the mains was a great step in the history of the distribution of electric energy by alternating currents and transformers; success which had been denied every attempt to work them in series was at once obtained when they were put into parallel connection, and the counter forces which had caused all the disturbances when in series were now employed for the automatic regulation of the whole system; before leaving the series system and examining the parallel, it may be stated that no self-regulating transformer of alternating currents has been invented up to this date which will give constant E. M. F. in the secondary circuit with constant current in the primary circuit.

"As the current in the secondary circuit increases, the counter E. M. F. in the primary *decreases*, and therefore the current in the primary circuit increases." That is the law of the alternating current transformers, and the fact of this law governing them, at once renders them perfectly adaptable to connection in parallel order to a supply at constant E. M. F.

For successful working in series order the transformers should conform to an entirely different law which would read: "As the current increases in the secondary circuit, the counter E. M. F. in the primary circuit *increases*, and therefore the difference of potential between the ends of the primary wire or circuit *increases*."

(*To be continued.*)

ABSTRACTS AND EXTRACTS.

ON THE DETERMINATION OF THE COEFFICIENT OF SELF INDUCTION.

In order to measure the coefficient of self-induction of a bobbin without iron and having but few turns of wire, say MM. Ledeboer and G. Maneuvrier in *Comptes Rendus*, we make use of the following method:

The resistance bobbin, R, the self-induction co-efficient, L, of which is sought, is arranged in electric equilibrium in a Wheatstone bridge used in the form of a graduated wire bridge. The slide having been brought to the middle of the divided wire, the equilibrium is made by means

Digitized by Google

of a nickel-silver wire, forming the fourth branch of the bridge. A revolving interrupter introduced into the circuit of the battery and into that of the galvanometer, transmits at each rotation the extra current of rupture into the galvanometer. We obtain thus a permanent deviation. We then eliminate the constant of the galvanometer and the intensity of the current which passes into the bobbin by making a second experiment. We stop the interrupter and we displace the slide by a small distance, ε; this destroys the equilibrium of the bridge and occasions in the galvanometer the passage of a feeble current which produces a deviation, a. We then find the coefficient of self-induction, L, by introducing these values of ε and a into the formula

$$L = R \frac{2}{l} \frac{\varepsilon}{n} \frac{1}{a} \delta$$

l being the length of the divided wire which corresponds to the resistance, R, and n the number of turns per second of the revolving interrupter.

We have verified the accuracy of this method by comparing the results which it gives for the co-efficient of self-induction of any two different bobbins with the results yielded by the direct measurement of the extra current. The following are the numbers given:

	Above method.	Direct method.
1st bobbin R = 0.122 ohm.	L = 0.00101	0.00102 ($\times 10^9$ cm.)
2d bobbin R = 0.431 ohm.	L = 0.00142	0.00143.

We have found, besides, that on substituting a straight wire for the bobbin, no appreciable deviation is produced on turning the interrupter.

We have applied this method to the measurement of the coefficients of self-induction of a Siemens electro-dynamometer and we have found the following values:

	R. Ohms.	L. 10^9 cm.	$\frac{L}{R}$
Thick wire (entire apparatus)..... ..	0.010	0.0000035	0.00035
" " (fixed coil alone).....	0.0060	0.0000023	0.00038
" " (movable coil alone).....	0.0040	0.0000012	0.00031
" " (entire apparatus).....	0.431	0.00142	0.0032

The movable coil of the apparatus has only four turns of wire; the fixed coil has seven turns of thick wire.

These numbers are available for the verification of the following fact. In the Siemens electro-dynamometer, the movable bobbin has its axis perpendicular to that of the fixed bobbin, and the current traverses the two bobbins in series. Hence it results that the mutual induction between these two bobbins is nul, and that the coefficient of self-induction of the entire apparatus should be the sum of the coefficients of self-induction of the two parts.

This is, in fact, verified by the numbers just obtained. In particular (as happens approximately in this case) when the ratios $\frac{L}{R}$ are equal for the two bobbins, separately, calculation shows that we must have the same value of the ratio for the entire apparatus. Now this ratio, $\frac{L}{R}$, has here the value of 0.00038 for the fixed frame, 0.00031 for the movable frame, and 0.00035 for the entire apparatus.

We know that this relation intervenes in the case of the measures relating to alternating currents, and it is with the view of studying these currents that we have undertaken these preliminary experiments.

As will be seen, our method consists in a novel adaptation of the known methods of Maxwell and of Lord Rayleigh to the particular case where the current is too feeble to give an appreciable impulse to the galvanometer. It presents the further advantage of rendering the use of a ballistic galvanometer unnecessary, and of rendering the employment of an ordinary mirror galvanometer possible and practicable. We prefer it to the other methods of measuring weak coefficients of self-induction, and especially to the method of M. H. F. Weber (a modification of that of Mr. Hughes), because it leads to a very simple formula and because it requires, except the Wheatstone bridge, no other experimental appliance than a rotary interrupter.—*Electrical Review* (London).

ON A SIMPLE AND CONVENIENT FORM OF WATER BATTERY.[1]

BY HENRY A. ROWLAND.

For some time I have had in use in my laboratory a most simple, convenient and cheap form of water battery, whose design has been in one of my note-books for at least 15 years. It has proved so useful that I give below a description for the use of other physicists.

Strips of zinc and copper, each two inches wide, are soldered together along their edges so as to make a combined strip of a little less than four inches wide, allowing for the overlapping. It is then cut by shears into pieces about one-fourth of an inch wide, each composed of half zinc and half copper.

A plate of glass, very thick and a foot or less square, is heated and coated with shellac about an eighth of an inch thick. The strips of copper and zinc are bent into the shape of the letter V, with the branches about one-fourth of an inch apart, and are heated and stuck to the shellac in rows, the soldered portion being fixed in the shellac, and the two branches standing up in the air, so that the zinc of one piece comes within one-sixteenth of an inch of the copper of the next one. A row of 10 inches long will thus contain about 30 elements. The rows can be about one-eighth of an inch apart, and therefore in a space 10 inches square nearly 800 elements can be placed. The plate is then warmed carefully so as not to crack and a mixture of beeswax and resin, which melts more easily than shellac, is then poured on the plate to a depth of half an inch to hold the elements in place. A frame of wood is made around the back of the plate with a ring screwed to the centre so that the whole can be hung up with the zinc and copper elements below.

When required for use, lower so as to dip the tips of the elements into a pan of water and hang up again. The space between the elements being one-sixteenth of an inch will hold a drop of water which will not evaporate for possibly an hour. Thus the battery is in operation in a minute and is perfectly insulated by the glass and cement.

This is the form I have used, but the strips might be better soldered face to face along one edge, cut up and then opened.

THE EFFICIENCY OF ELECTRIC MOTORS.

A number of experiments, says *Engineering*, of London, have been made by Mr. W. M. Mordey and Mr. C. Watson, at the factory of the Anglo-American Brush Electric Light Corporation, to find out the best principles on which to construct electric motors, and the reason why the dynamo as a motor should have a lower efficiency than when working as a generator. As given in the *Philosophical Magazine*, these principles are: 1. That the magnetic field should be a very strong and the armature a very weak electro-magnet. 2. In both generators and motors lead, distortion or displacement of the brushes or the magnetic field is wrong, and is to be avoided by attention to the first condition. If there be any lead in dynamos it is in the direction of rotation; in motors it is in the opposite direction, as the course of the current through the armature is reversed; but the field is the same. 3. In both generators and motors absence of sparking at the brushes depends mainly on the first condition being complied with. 4. Reversal of rotation. In neither generators nor motors

1. From the *American Journal of Science*, February, 1887.

Digitized by Google

is movement of the brushes necessary. It appeared from these principles of construction, which are applicable to both generators and motors, that the lower efficiency of the dynamo as a motor must be due either to friction at the bearings, air friction, and friction of the brushes against the commutator; to loss of energy in heating the armature and field magnets, and to self-induction; or to loss by the production of eddy currents in the iron. From the nature of these probable causes consideration shows that the last is the true one; for in a dynamo the rotation of the armature causes eddy currents to be generated in the iron core in the same direction as the conductor proper with which the core is surrounded. Of course, as the armature is always more or less sub-divided or laminated in a direction at right angles to the line of force, any circulation of currents round the core is avoided; but local currents or "eddies" are set up, and taken as a whole these eddy currents on the outside of the core are in the same direction as the current flowing in the copper conductor. In an electric motor, however, the eddy currents and the currents in the copper conductor are in opposite directions, as, although the electromotive force set up in the conductor is in the same direction in a motor as in a dynamo, the current in the former is forced through the armature in a direction contrary to the electromotive force. It will be seen that while in a dynamo the two sets of currents, those in the iron and those in the conductor, tend to oppose and to reduce one another, in a motor they act in such a manner as to mutually assist one another. Thus, with the strength of field, the current in the conductor and the speed the same in both cases, the eddy currents in the iron core of the armature will be greater than in a generator, and the loss from heat more.

THE EMPLOYMENT OF SPIRAL SPRINGS FOR MEASURING INSTRUMENTS.

In a paper by Prof. W. Kohlrausch, in the *Electrotechnische Zeitschrift*, on the employment of spiral springs, for measuring instruments and the accuracy of galvanometers constructed therewith, the causes which are likely to affect the constancy of spiral springs are mentioned in detail by the author, with an account of experiments bearing on each point, in order to afford some idea of the reliance that can be placed on the indications of instruments into the construction of which they enter. The effect of age, judging by observations on a brass spring extending over a period of seven years, may be completely neglected. Continuous and prolonged deformation produces a small amount of permanent set, so that the spring, when released, does not return to the original position, but does not actually alter the indications of the instrument if the readings are taken from the new zero thus found; steel is, in this case, less affected than German silver. Oft repeated, but intermittent deformation—as exhibited by a spring of 90 convolutions and 2½ inches long, being stretched so as to change from a length of 3½ inches to 9 inches 200 times per minute for 400 minutes—introduced no appreciable alteration in its subsequent indications. An increase of temperature of 18 degrees Fahrenheit raised the indications of a Siemens' torsion galvanometer about one-tenth per cent., so that the reduction in the elasticity of the spring is apparently almost equal to the decrease in moment of the magnet, which would be, under these conditions, about 0.4 per cent. Further experiments on loaded springs confirmed this conclusion, and showed that steel was again to be preferred to German silver. By combining the results given above, the utmost limit of error introduced by the use of spiral springs cannot exceed 0.5 per cent. If, however, as is the case in the Siemens' torsion galvanometer, the current passes through the spiral spring, care must be taken that the heating from the passage of the current is not excessive. The author found an alteration of 1.4 per cent. in the indication of such an instrument after a continuous test of 30 minutes, with a difference of potential of 100 volts between the terminals. If such instruments be calibrated at intervals to correct the decrease in the moment of the magnet, an accuracy within about 0.1 per cent. can be relied on. With the Siemens' dynamometer for intense currents, the limit of error, owing to the friction at the mercury contact, is about 1 per cent. Another form of instrument, the spring galvanometer of F. Kohlrausch, is also reliable within 1 per cent., and is perfectly aperiodic with frictionless damping. Owing, however, to the employment of an iron core, the readings of currents taken in ascending and descending order of magnitudes will vary to some considerable percentage from the effect of residual magnetism, which exists in even the best soft iron, if this error be not eliminated by mechanically bringing the core past the position it would take up under the action of the current, and then leaving it free to return to that position.—*The Electrician* (London).

LIGHTHOUSE ILLUMINANTS.

Another bulky blue book on the subject of lighthouse illuminants has just been issued by the board of trade. It consists principally of correspondence which has taken place between the department, the Trinity House and various shipowners throughout the country. The actual value of electric light for lighthouse purposes is still a matter of dispute. The report of the Trinity House committee, which investigated the whole subject two years ago, has not been accepted as final. The opposition is, doubtless, to some extent, factitious, arising from those whose interests are affected, while to some extent the complaints of pilots as to the dazzling effect of the beam may be well founded. The idea, however, which is still industriously promulgated, that the electric light has less power than gas or oil of penetrating fog was thoroughly disproved by the experiments of the committee, who, it may be as well to repeat, summed up their report in the following terms: "That the electric light, under all conditions of weather, is the most powerful, and has the greatest penetrative power in fog," and "That the Trinity House recommended mineral oil as the most suitable and economical illuminant for the ordinary necessities of lighthouse illumination, and that for important land falls, where very powerful light is required, electricity offers the greatest advantages."—*The Electrician* (London).

ELECTRIC LIGHTING AT THE PARIS EXHIBITION OF 1889.

The finance commission of the proposed International exhibition in 1889, under the presidency of M. Lockroy, has settled the main features of the electric lighting of this exhibition. The conclusions arrived at by the committee were based upon the proposal made by five of the largest electric light firms in Paris, representing a total share capital of £510,000. The point of special interest to English and other foreign manufacturers, and would-be exhibitors, is an attempt, on the part of this syndicate of French manufacturers, to get the whole of the lighting under their control. Their proposal amounts to nothing less than to farm out the lighting, they to be responsible to the executive commission of the exhibition for the proper carrying out of the work. It is doubtful whether English electricians will fall in with this arrangement, which would require them to put their interests into the hands of a syndicate consisting mainly of trade rivals. But this is practically what the syndicate wish to bring about, since, in their recommendation, they say that in order to carry out the work of lighting in a proper and efficient manner the signatories are ready to form a syndicate, and to admit into this syndicate all exhibitors of

Digitized by Google

electric lighting appliances, without distinction of nationality, provided they adhere to the conditions imposed by the executive committee, and to the rules and regulations of the syndicate. All exhibitors who join on these terms, will participate, in like manner, in any benefit which might arise from this undertaking. It is proposed that the executive committee should hand over to the syndicate one-half of the entrance fees received between the hours of 6 and 11 P. M.; the entrance fee to be two francs for that time, whilst the usual fee during the day is only one franc. No reduction in the entrance fee in the evening is to be made by the executive committee, without having obtained permission from the syndicate. The total amount of light to be provided is estimated at close upon 3,000,000 candles, and the power at 3,000 h. p., with an additional 1,000 h. p. reserve. The light is to be partly arc and partly incandescent, but the proportion between the two is not given. This, however, can approximately be calculated from the above data. Roughly speaking, the power for the incandescent lighting will amount to 1,660 h. p., and that for the arc lighting to 1,340 h. p. It will thus be seen that the incandescent lighting is not such a gigantic enterprise after all, and it is about of the same magnitude as the whole of the lighting was at the Colonial exhibition in London.—*Industries.*

UNDERGROUND TELEGRAPH WIRES IN GERMANY.

THE question of overhead against underground telegraph wires has again excited public attention, in consequence of the breakdown occasioned by the recent snow storms, and in several quarters the example of Germany was cited as one which should be followed by our own postal authorities. As the statements which appeared in various daily papers and periodicals were at variance with each other, and left the whole matter in an undecided state, we asked our electrical correspondent in Berlin to collect some information on the question of subterranean lines in Germany, and he writes as follows: "According to the plans elaborated by the German post office, the underground cables were intended, in the first instance, to serve for direct communication betwen the more important centres of business throughout the empire, and are, therefore, strictly speaking, commercial lines, military considerations being of secondary importance. Intermediate stations on these great trunk lines are very seldom connected to them, and the traffic to or from intermediate points goes by overhead wires. In certain cases, where it is desirable to divide the trunk into several sections, worked by relays, these are placed in intermediate stations, which can then also speak to the large centres by means of the underground cables; but this use is exceptional. The cables throughout the whole system, serve only for the outgoing current, the return circuit being through earth, as usual. Each cable serves for seven circuits, each of these consisting of a seven-stranded copper cable, insulated with gutta-percha. The diameter of the single wire varies, according to the length and importance of the line, between 24 and 28 mils. The cables are protected by an iron wire covering, and are placed without any further preparation into trenches about three feet deep, which are then filled up. The instruments used on the underground trunk lines are practically the same as those serving for the overhead lines; but special apparatus has been added, to reduce, in a certain measure, the retardation due to static induction. Up to a distance of 240 miles there is no difference in the speed between overhead and underground lines, when worked with Morse instruments; and even greater distances are worked with these instruments, by the addition of the apparatus above mentioned. At 360 miles, from 300 to 330 currents can be sent per minute; but when the distance is considerable, the post office prefers to insert relays, which work very satisfactorily. Besides the Morse, the Hughes apparatus is much used; but certain additions and alterations had to be made to the original pattern, in order to render it fit for long-distance service. The speed on our lines is, according to English ideas, exceedingly slow, the average being only 16 words per minute. An interesting and useful addition to our telegraphic system lies in the stations for periodical testing of the lines. In 18 junctions of our telegraph net-work are erected special testing rooms, in which the underground cables are tested weekly, at a predetermined hour. The tests are thus performed in the two end stations of each trunk line almost simultaneously, so that each portion of the line is tested independently and at the same time by two observers. From Berlin radiate eight large underground trunk lines." It will be seen from the report of our correspondent, that although the service is organized with the thoroughness usual to the German official mind, and evidently works to the entire satisfaction of its customers, yet a similar telegraph service would be totally inadequate to deal with the enormous business transacted over our English lines. In Great Britain, speeds up to 300 and even 400 words a minute are not at all unusual, and have even been obtained on lines which are partly sub-marine, such, for instance, as the lines between England and Ireland. To come back from these speeds to the ridiculously slow rate of 16 words per minute, would certainly be too high a price to pay for the advantage of having underground lines, and this is a point which seems to have been entirely overlooked by those critics of our postal telegraphs who seem to think that these things are better done in Germany.—*Industries.*

INDUCTION COILS OR TRANSFORMERS.

THE following interesting letter from Prof. Elihu Thomson appears in the *Electrical Review* of London, for April 15th.

"I have been much interested in reading the historical matter connected with the distribution of alternating currents by induction coils or transformers, contributed by Mr. Rankin Kennedy, and the first part of which appears in your issue of March 18th, 1887."

I think it will be of interest to your readers and useful in the history of the subject if I state the following facts:

On November 8th, 1878, I filed in the United States patent office, jointly with Prof. Houston, an application for a patent for an induction coil system in which the secondary wires of the induction coils differed from those of the Ruhmkorff coils in being made of coarse wire instead of fine wire, and used to run vibrating arc lamps, which application was rejected on the ground that there was no invention in substituting coarse for fine wire in the secondary.

On January 13th, 1879, a description, which is still in my possession, was written out and dated, describing and showing by drawings the connection of the coils in multiple arc from a main line, with vibrating arc lamps operated by the secondary currents. It was recognized at the time that the working of one branch would not, with a constant potential between the mains, affect the work in the other branches. In February, 1879, having completed an alternating current dynamo, a pair of induction coils were connected in multiple from the mains running from the machine, and the arrangement tested. The coils used were such as are described in the *Franklin Institute Journal* of January, 1879, in which the two conductors were surrounded by a sheath of divided iron, and the testing was done at the institute, the engine there furnishing the power for the dynamo. This was before the day of incandescent lamps, and as several years elapsed before such lamps could be freely purchased, there was, in 1879, no market for an induction system.

My time has been so completely occupied with various developments in the field of electric lighting that I have hesitated to enter into any of the discussions on these matters which have appeared from time to time, and I make the above statement feeling that it is right and proper under the circumstances.

I notice also in your issue of March 18th 1887, a paragraph accredited to *Industries*, saying that "La Société pour le Travail Electrique des Meteaux" had bought up all the patents connected with electric welding, and other applications for working metals by electricity. This is somewhat interesting to me, as I now happen to hold some patents connected with the subject.

STENO-TELEGRAPHY.

SOME of the features of short-hand writing, synchronous-multiplex telegraphy and type-writing, are combined in a

Digitized by Google

system of steno-telegraphy invented by M. G. A. Cassagnes, of Paris. In recent experiments over a wire running from Paris to Orleans and back, messages were sent at the rate of two hundred words a minute, that being the highest speed attainable by a nimble-fingered operator. By means of an automatic transmitting apparatus, using a strip of paper previously perforated, as in some of the systems of telegraphy already in vogue, 17,000 words per hour were sent over a line 650 kilometers in length, the messages being automatically printed by the receiving instrument.—*Science.*

COPPER PRODUCTION OF THE UNITED STATES.

THE following statement of the copper production of the United States for 1886, has been prepared by Mr. Charles Kirchhoff, agent of the United States Geological Survey for the division of mining statistics: The total production of the year was 156,373,421 pounds of domestic copper, produced as follows: Lake Superior, 79,728,838; Arizona, 15,657,035; Montana, 57,611,621; New Mexico, 558,385; California, 430,210; Colorado, 409,306; Utah, 300,000; Nevada, 50,000; Maine, New Hampshire and Vermont, 315,719; Southern States, 29,811; lead desilverizers, etc., 1,282,496 pounds. Not less than 136,820,943 pounds were turned out by American refining works, including a small quantity of blister exported as such, and small amounts of unrefined copper going directly to consumers. Deducting from this the exports, 19,504,087 pounds, there remains over 117,000,000 pounds available for home consumption, of which about 64,000,000 pounds came from Lake Superior and the balance, 53,000,000 pounds, from other sources. The important features in the copper trade of the United States in 1886 have been the continued increase in the output of Lake Superior and the falling off of Arizona and Montana; the sharp decline in the quantities exported, and, above all, the notable increase in the quantity of copper which sought the more remunerative home market. Coupled with this tendency to overstock the home trade in the face of a declining output, is the important fact that the quantity of miscellaneous grades has improved, and that consumers have learned to utilize relatively lower grades of copper. While the local supply has increased, the consumption in this country, has, on the other hand, developed a gain in the most satisfactory manner.—*American Engineer.*

SOME INTERESTING EXPERIMENTS WITH STATIC ELECTRICITY.

THE following interesting experiments, which will probably be new to many of our readers, were described by Mr. Boys at a recent meeting of the Physical Society:—"If sealing wax or any similar sticky substance, be melted in a cup and put upon the conductor of an electrical machine, as in one of the old fashioned experiments, it will begin to throw out threads in an extraordinary way; the fibres are large when the resinous matter is very hot, each fibre shoots out as a cylinder with remarkable speed, then breaks into beads. These minute beads can be made to patter against a drum head, and make a noise upon it like falling rain. The cup containing the melted wax should be inclined from the operator and from the electrical machine before the latter is worked, or both will be covered with the most invisible sticky web imaginable; a cup of burnt india-rubber tubing so treated sends out almost invisible filaments. Canada balsam is the perfection of a material for producing such sticky threads. When a candle is held near a cup throwing out such electrical filaments they shoot into the flame and sometimes cover the candle; sometimes they will stop as they approach the flame, then turn back, and go into the cup from which they started, in consequence of discharging their electricity into the flame. In a few minutes miles of these sticky threads can be made, and as they break into beads the method affords a ready means of powdering such of these substances as are not easily pulverized in any ordinary way."—*The Electrician* (London).

INFLUENCE OF ELECTRICITY ON DELICATE WEIGHING.

M. HENNIG DE WURTZBOURG having noticed some incomprehensible differences in the weights of equivalent quantities, undertook investigations, which showed that balances of precision are often influenced by the electric state of the glass case which surrounds them. This electricity influences the "riders" which slide on the beam of the balance. The error resulting from this influence may amount, it is said, to 600 milligrammes where the case is strongly charged, and two hours afterwards there may still be an error of 10 milligrammes.

THE GERMAN PATENT OFFICE.

ACCORDING to the official report of the German patent office, just published, the number of applications for patents rose from 5,949 in 1878, to 9,991, in 1886; but whilst in the former period only 25 per cent. of the applications were disallowed as not patentable, they increased in the latter to 60 per cent. In 1886, 4,008 patents were sealed, whilst 5,983 were disallowed.

GAS AND ELECTRICITY.—TWO INTERESTS OR ONE?[1]

GEO. W. GRAEFF, JR., PHILADELPHIA.

THE time has certainly come when the discussion of this question is imperative, and when it must be held with view to business prospects only. Prejudice and sentiment must alike be given to the winds, and the cold test of dollars and cents be applied, without fear or favor. The question is a business one, solely.

Since the introduction of electric lighting as a means of artificial illumination, until within the past few months, there has been little between the gas and electric interests in this country, save direct and unreasonable antagonism. Some of the reasons are plain.

For many years gas had occupied the field as the general and practical artificial illuminant for domestic and commercial uses. From a small beginning, the business grew into a settled and conservative industry, inferior in commercial importance and as a field of financial investment, to the railroad and mining interests only. The combined capitalization of the gas companies of the United States runs high into the hundreds of millions, as figures easily show.

While in its earlier years, the industry of gas manufacture met with many obstacles and encountered conflicts and setbacks in its struggles for recognition and success in the business world, its growth has, altogether speaking, been rapid and enormous. With success, it became more and more conservative in its methods, and finally grew to look with anger and jealousy upon any proposed interference with what it considered its vested rights in the control and monopoly of the business of artificial illumination. It is not strange, therefore, that the introduction of the electric light, some half-dozen years ago, met with jealous protest and vigorous objection from the gas fraternity. Nor were these sentiments subdued by the methods by which many of the electric light advocates began the endeavor to force their systems upon the public.

Like nearly all other inventions of promise, the electric light was seized upon by speculators, in many instances for the organization of companies that were thrown upon the public as ventures. Failures followed and were numerous, as was to be expected. Both upon the other side of the Atlantic and on this, schemes, gigantic chiefly in their paper capitals, collapsed, and when inflated ventures came to grief, the public was swift to condemn the entire industry as fraudulent, oftentimes to the great prejudice of earnest and honest men who were devoting time, talents and money to the development of the new system, in their endeavors to place it upon a sound commercial basis.

Reasoning largely from the distrust of the unconcerned world, the concerned gas companies generally throughout the country became strongly imbued with prejudiced opposition to the new means of light, presenting the constant argument that the whole affair was a mass of gigantic scheming, unworthy of

1. Paper read at the Third Annual Meeting of the Ohio Gas Light Association.

Digitized by Google

friendly consideration; while, on the other hand, its possible success meant the constant presence of a dangerous rival to the gas interests.

As if directly to increase this antagonism, many of the parent or manufacturing electric light companies persisted in exacting fabulous "stock concessions" and enormous profits upon sales of electric apparatus, and for the rights to use their several systems. In this manner, the local companies and users were handicapped with an enormously inflated capital stock, which rendered practically impossible the return of any profits to the legitimate investor, and, as a consequence, the business of electric lighting has been compelled to wade through a period of invention, development, scheming, and, we might almost add, wholesale error, such as always attaches, in a greater or less degree, to the development of new and greater enterprises wherein capital has to be sought from the world at large. The electric light manager who has labored earnestly and faithfully to reform the business from such abuses, and to place it upon a solid and legitimate commercial basis, has had neither pleasant nor easy task to perform, and has manifestly suffered from being considered to be in bad company.

During the past five years, invention has been an art assiduously plied, and the business has been greatly improved by a few earnest and determined men, who have loyally worked for legitimate development. Systems have been revised, apparatus has been improved and perfected, the cost of original production greatly reduced, and the prejudices of gas makers and their masters—the public—satisfied. The matter of electric lighting is now regarded generally by thoughtful business men, as an established and honorable industry. Despite speculation, failures and the naturally expensive cost of development, the business has made its way from the realm of venture to that of at least moderate success.

The fact of this metamorphosis has greatly changed its relations to the whole commercial world. As a substantial and legitimate investment, there is now nothing that appeals with more force to capital, when organized upon a proper basis, unless it be the industry of gas manufacture. The combination of the two in one is irresistible.

To the gas companies of the country, the electric light now occupies a higher and broader relation, and the more advanced of these have become satisfied that there should be no more antagonism between the two illuminants. They are either rivals or companions in trade, and the closer the association, the better and more profitable for both interests, and for that other factor of importance to every gas manager—the consumer. The two methods should be combined and worked together in all cases wherein artificial illumination is supplied by a corporate or private concern. The reasons for such combinations are many and potent. We give a few:

Nearly every city and town in the civilized world, containing 10,000 inhabitants or upwards, has an established and successful gas plant. The organizations of these companies are complete. They have their executive managements and labor systems in active operation. Generally such companies have a surplus of brain and sinew, that is not taxed to its full capacity, to manage the company or operate the works. In a great number of cases, the gas company could operate an electric light plant with little or no extra expense for executive and manual labor. In many instances, hardly an additional man would be needed by an established gas company, in adding electric lighting to its business,

A majority of the gas companies have more land than is actually required for the operation of their works, and not infrequently surplus room in their buildings, that could be profitably occupied by an electric light plant. This would save all rent—an item that means from $250 to $2,500 to the independent electric company.

Where a company has any difficulty in disposing of its coke at a fair figure, it can find a use for a goodly portion in the electric lighting service; and where coke meets with ready sale, the employ of the quantities necessary for such fuel purposes, would draw the line of demand more tightly and generally secure better prices for the portion sold. This, as a great soldier remarked of the tariff, is a local question.

A large proportion of the older gas companies have a surplus of earnings on hand, sufficient to pay for an electric plant. This would enable the company to sell its electric light at a considerably reduced price from that necessarily charged by an independent company, the latter of which must earn dividends upon its capital stock which will not average less than $20,000 to $30,000 for each 100 arc lamps it operates from a central station, built upon modern principles. Where additional capital is required by the gas company, the amount would be far less than that needed by an independent electric light company. The cost of installation, and the saving thus made in organization and operation, would be sufficiently large to give the gas company enormous advantages over an independent organization. These advantages, in many instances, would include the declaring of dividends when, upon the other side, none could be thought of.

It is not necessary to refer, save briefly, to the street lighting argument. It is acknowledged that arc lights in the street cause increased use of gas for interior purposes. It is evident, therefore, that this arc lighting should be under the control of the party that it is to benefit most from its use and efficiency. Again, it can scarcely be denied that for street lighting, where population is scattered, arcs are preferable to gas lamps. Long lines of pipe, for the simple purpose of supplying street lamps, would not be necessary, wires being strung more cheaply than the pipe can be laid.

I do not think much of an argument presented to me yesterday, that gas companies generally take out their meters from premises wherein the electric light has been solely installed, unless paid rent for the use of said meters, and that this makes the consumer dependent upon the electric light at all times, thereby putting the electric lighting company to the expense of constant supply, and hence raising the cost "in the holder" of its light. I do not believe in taking meters out until the consumer orders them out, or until he becomes a radical opponent of the use of gas. The former is rarely the case, as there are few consumers who are willing to pin their entire faith to the supply of electric lighting from a central station, and the cheapest way to drive a customer to the other position mentioned, is, in my opinion, to take out his meter. Even where the consumer seems wedded to the electric light, it is better to leave in his way the constant temptation to use gas, and to throw in his way the constant suggestion that there are ends to which gas may be consumed, other than the one purpose of illumination.

It has been suggested also, since arrival here, that, after all, the most powerful reason why the gas companies should adopt the electric light is that it will tend to make them popular. The matter of popularity is a perilous one. From the greatest of stories down to the humblest of circumstances over which the public hold control, the change from the cry of hosanna is an easy one, and especially so is it the case in this country, where we have local reformers in every city, town and village, who are always seeking some Sindbad on whose neck to ride into temporary notoriety. I do not trust to popularity when, as has been the case within the past week, in my city, announcement of a reduction in the price of gas has been followed by the statement, in some of our largest dailies, that the meter wheels would now go round more rapidly than ever. While ignorance and vice go hand in hand, as they do in these cases, it is folly to dwell fondly upon the security of the bubble of popularity.

I am, too, more than ever convinced that popularity is but a bubble, since receiving the opinion of one of the best known members of the gas fraternity, a New York engineer whom all our associations delight to honor, and who is supposed to hold the good-will of the citizens and municipal authorities of his city by the most binding of ties. This gentleman stated to me at the Boston meeting, that the chief reason why his company would not adopt the electric light until it was compelled to, was that it would tend to depopularize the company, and that he considered it much better to have the electric light as an open opponent than to have the gas company furnish it, and thus raise the public cry of "monopoly." At the same time, the gentleman I have named did not consider that the right to cry "monopoly" was furnished when his efforts kept a franchise from being granted to a rival gas company that proposed to enter his city, put up an expensive and permanent plant, and furnish, under guarantee, a gas of higher candle-power than did the company of which he has charge.

If there is anything in the cry of monopoly to fear, it will disappear when the consumer of light finds, as he must and will, that with the supply of electric lighting in the hands of the gas company he will secure better and cheaper service than is or can be possible under the present dual systems. Deeply rooted in the heart of the gas consumer, more firmly than his inherent love of opposition to the powers that be, is his affection for his pocketbook, and the saving of the dollar is what will convince the consumer that the right course is being followed by a combination of the gas and electric interests.

I do not wish to be understood as endorsing the idea of better or cheaper illumination by means of the electric light. While this is generally admitted to be the case as concerned street lighting, I have never yet seen, nor do I soon expect to see, the electric light that for interior uses, will excel or seriously rival the Lungren burner. With the Wenham, to which our president flatteringly alluded in his address, this morning, I have little acquaintance, but am willing to accept his endorsement, which has no doubt been based on thorough examination and test. Nor do I ignore in favor of the electric light, the incandescent gas lamps that are now seeking the market. In at least two of these I have considerable faith, while the third is in hands that I feel will make a success of it. I do not ignore these weapons which the gas companies possess, or will possess, if a conflict of systems is finally to ensue. But I see clearly that the electric light is here and will stay here, as either for us or against us. Which is it to be? The consumer will demand the

Digitized by Google

electric light—is now demanding it. Shall the gas companies comply with his desires and give him what he wants, or shall we tell him to go elsewhere for it? It is a poor grocer who sells sugar and refuses to handle cut loaf, because he imagines that he can compel his customers to take granulated or go to the other corner. After a while they will go to the other corner too frequently for his enjoyment.

The question of fuel gas in connection with this subject of combined interests, is one of too much consequence to attempt to notice briefly; so we pass it by entirely, with the simple suggestion that the dovetailing of these interests, and the substantial aid which the introduction of the electric light by the gas companies will give to the further use of gas for fuel purposes, is well worthy of more consideration than it has as yet received.

The question then is a plain one: With the knowledge that electric lighting has come to stay (and we might add in a broader sense that electricity has come to stay), and that it is growing to be more and more a commercial element, is it wise for the gas companies to leave its use, for good or ill, in the hands of those who have no interests in common with us? Is it not better that we should take it into hand, as an acknowledged ally and friend? It may be said that the gas companies of one state in the country have determined the ethics of this matter for themselves, and their example is worthy of imitation. Shall it be followed?

"NO PATENT, NO PAY."

THE American patent system involves examination of specification, claims, and drawings, by trained examiners, which has forced up the standard of preparation necessary in patent cases, to a point that requires at least fairly good composition and execution, and has established a number of standards that necessitate careful and laborious work on the part of the person preparing and prosecuting an application, in order to thoroughly protect the invention involved. This results in making the soliciting of patents a most exacting and laborious profession, and one to which no first class man can afford to devote himself without fair remuneration.

Inventors may be divided into two general classes, one composed of men of intelligence, experience and practical capacity, whose inventions may be few in number as compared to the whole, but who really produce new and useful things and to whom the actual quality of their patent work is of the greatest possible importance. The other class is composed of persons, frequently from the rural districts, without either experience or information, who imagine that the less they know about any particular art, the more likely they are to strike something wonderful. Such inventions are as a rule beneath criticism, and the cupidity of this class of inventors in very many instances predominates over their common sense and judgment, to such an extent that they are always on the watch for some scheme that promises them the advantage.

Such plans are usually elaborated under the above heading, supported by arguments about as follows: "You will easily see that the solicitor who is willing to wager his fee upon the result of his judgment of the patentability of an invention will be more likely to secure you a patent than a person who demands pay for his services in advance." And this deceitful literature is disseminated throughout the entire country by the class of attorneys who do business under the plan of "no patent no pay."

If the patent office were responsible to inventors, and if it were the business of the examiners to ascertain *how much* an inventor was entitled to claim, and if they were required to point out to inventors the fact that they did not claim as much as they might, or wherein the scope and strength of their pending applications might be added to, or improved upon, then the "no patent, no pay" attorney, being the cheapest, would probably be the best, for that, if no other reason, and it would be arrant folly to throw away hundreds of dollars in the preparation of an important application when numbers of men could be found who were ready and willing to do work that would answer the purpose, for a much smaller sum.

But such is *not* the case, and the *patent office is responsible to nobody*. In the very nature of things its position is the exact opposite of that which is so frequently supposed. The business of the examiners is to present everything that can be opposed to the grant of an application; in other words, to show the state of an art, and call upon the inventor to amend his application so as to claim only what is left to him in view of the showing made. Being always on the opposite side, that is on the side of the public, they, the examiners, frequently decide that an inventor is entitled to less than he really is, and right here is where the services of a competent attorney are worth far more to the inventor of a really new and useful improvement than is generally at the time appreciated; for we have on one side an inventor ignorant of the technical requirements, and too often willing to concede almost anything to secure his patent, and on the other side an examiner thoroughly informed on that and similar points, and willing on behalf of the public, to see the inventor accept less than his due. It is between these opposing forces that the attorney works, and upon his judgment, care, and skill, the scope of the claims ultimately depends in nearly all cases.

Years ago it was thought that the laws providing for reissues allowed not only the correction of mistakes, but also the broadening of patents originally granted in too limited a form, but decisions upon a number of reissued patents so expanded have resulted in the now unquestioned establishment of the fact that a patent once accepted by the inventor, cannot, except under the most exceptional circumstances, be extended and broadened by reissue, thus practically throwing the entire responsibility upon the attorney. One reason why corporations so frequently appear to have the advantage over individuals is that they always employ the best available counsel and as a rule pay sufficiently well to make it worth while for a man to devote his time, energy and thought to their best interests, the result being that in contests with individuals they almost invariably win, as they should.

Business is business all the world over, and first-class men, properly qualified for the practice of their professions, do not work on speculation, from which we conclude that "no patent, no pay," is a snare and a delusion.—FRANKLAND JANNUS, in the *Patentee*, April, 1887.

SOMETHING ABOUT PATENTS AND PATENT LAW.

THE marked tendency of the United States Supreme Court, in many cases during the past few years, to check the grasping propensities of rich and influential corporations is certainly a hopeful omen. Not less gladsome is the well-attested fact that the Supreme Court has also, during this time, shown a most decided inclination to limit patent monopolies to the precise invention stated in the claims of the patent, as the statute requires should be done. The limit of extreme liberality in the construction of patent monopolies has been reached. The pendulum is now moving in the opposite direction. The golden mean is always to be preferred. But the problems of life seem to be solved only on the pendulum's principle of one extreme following another. About 22,000 patents alone were granted by the United States patent office during the last year. And there are now in force in the United States over 250,000 patent monopolies. But it is safe to say that nine-tenths of these patents are harmless—because no one will undertake the profitless task of infringing them. They are not worth infringing. Over $800,000 was paid out by inventors into the patent office last year as government fees for patents, designs, re-issues, trade marks and labels. The usual government charge for each patent is $35. But the inventors paid quite as much more to their patent agents or attorneys who did their patent office business for them. Indeed the patent attorney's charges are often much larger than the government fees for his services in piloting the inventor through the patent office. Sometimes the attorney's fee is $500, and occasionally several thousand dollars have been paid out in securing a single patent. And after the patent is procured, not rarely are large amounts of money and much time spent in making and vending the alleged invention, and generally without profit, but usually at a total loss. Men will make no investments in real property until the title has been carefully and thoroughly examined by honest and competent persons. But men will invest $50,000 or $100,000 in patent property without any examination whatever into the validity and commercial value of the patent. A competent patent lawyer can only give a reasonably probable opinion as to the soundness and validity of a patent, after a very careful study of the language of the patent in the light of the state of the art, as illustrated by foreign patents, printed books, public use, prior knowledge, etc. And a practical manufacturer and merchant can only judge of its probable commercial value aided by the patent lawyer as to precisely what the claims of the patent cover. It is true that most inventors fail to make use of all available sources to learn the state of the art before they make John Gilpin haste to take out their patents. When they get cooled off and have learned more of the state of the art they have discovered important improvements, and then they find that another patent must be taken out. All this is costly to the inventor, but profitable to the patent agent, who generally has an eye only to his fees as a patent attorney.

It is important for the purchaser of patents to bear in mind that the patented monopoly granted is only the invention described in the claims at the end of the specification, and not the invention described in the specification. In English patents, on the contrary, the precise invention patented must be gathered from the specification. And in English patents, also, it can never be known positively how broad or how narrow the patented monopoly is until the patent has been contested and passed upon by the courts of England. This is in sharp contrast with the precise character of a patent grant prescribed by the American law. In a United States patent, in order to constitute infringement, all the elements of the claim, or their substantial equivalent, must be used exactly as described in some one of the claims in order to constitute infringement under the patent law.

Then, again, the purchaser of patent, after he is fully

Digitized by Google

convinced that the claims of a United States patent appear to be valid in law, and not subject to any of the defenses named in the statute, yet he must further be convinced that the claims of the patent as granted are commercially valuable, and in order to arrive at a safe conclusion on this latter point a practical man well versed in the trade or business to which the invention belongs must give his best judgment as to whether there is any money or not in the sale of the article just as it is described in the claims.

Some risk, it will be observed, must in any event be generally taken in investing money in patent grants. But this risk would be reduced to the minimum if these precautions were taken before making the usually wild investment in patents, and consequently great losses would be saved. The proverbial uncertainty of the law is greatly intensified in patent suits; but this is not altogether necessary. Much, very much, could be truthfully said about unnecessary causes of this uncertainty in infringement suits. Certainly there is no good reason for it. But this discussion must be reserved for another occasion, because it would take so wide a range.

In conclusion, I cannot forbear quoting from a well-digested article on "Patent Law and Patent Practice," by the learned and accomplished editor of the *Central Law Journal*, St. Louis, Mo., of September 17, 1886:—

"One of the dark corners of the profession, to the average practitioner, is the patent law of the United States. The subject has long been turned over to specialists, and its practice so completely absorbed by them, that it is really no disparagement to even the best informed lawyers to say that they know very little about it. Nevertheless the subject is of such great interest to the people of the United States that the character, terms and operation of the existing statutes regulating patents, and especially their exposition and administration by the courts, are worthy of much more attention than they have ever received from the profession or the general public."—J. McC. PERKINS, in *The Age of Steel.*

ON REVERSIBLE LEAD BATTERIES AND THEIR USE FOR ELECTRIC LIGHTING.[1]

BY DESMOND G. FITZ-GERALD.

WHEN the cheap production of electrical power by means of the dynamo machine was first realized as a *fait accompli*, there were many who naturally, but somewhat rashly, assumed that cheap electrical power would immediately become generally available for electric lighting in private dwellings and for many other applications on a small scale. These anticipations, we all know, were doomed to disappointment—most of us have found it impracticable to introduce electrical power into the household; and the privilege of making use of the most beautiful, cleanly and hygienic means of artificial lighting has hitherto been denied to us. It may be interesting at the present moment—when the lead storage battery is claiming renewed attention—to glance briefly at the grounds for the sanguine anticipations which were formed soon after Werdermann brought the machine of Gramme into this country, to recall some of the main causes of their non-realization, to examine critically the accepted views as to the chemical and electro-chemical reactions involved in the working of storage or reversible lead batteries, to estimate the probable extent to which such batteries may be improved, or the room there may be for improvement, and, lastly, to consider, at least in its *prima facie* aspect, the question as to the practicability of carrying the original anticipations into effect by means of an improved form of reversible lead battery.

It is admitted by high engineering authority that, with steam engines of improved construction and of not less than 300 h. p. nominal, it is quite practicable to obtain a h. p. hour mechanical by the combustion of 2 lbs. avoirdupois of good coal. Allowing 20s. per ton for such coal, the cost of the fuel to develop this quantity of energy would be considerably under one farthing (.214d.). Putting the commercial efficiency of the dynamo machine at the very low figure of 70 per cent., the cost of the h. p. hour electrical would be less than one-third of a penny (.306d.). Taking everything into account, Sir W. Siemens in 1882, could not estimate the cost of production, in London, at a higher figure than nine-tenths of a penny (.895d.). He allowed 3½ lbs. of coal per h. p.; but I think, allowing for improvements, that that estimate may be diminished some 30 per cent. There are incandescence lamps that will yield a candle-power for every 2½ watts expended; and, taking the h. p. electrical as 736 watts, it would thus be equivalent to the illuminating power of 294 standard candles. The price, in London, of the gas to produce this illumination for one hour may be estimated at about 2½d.; and in London gas is cheaper than in most other localities. It was natural that figures analogous to these should arouse sanguine anticipations in the electrical engineer—

> And duller should we be than the fat weed
> That rots itself in ease on Lethe's wharf
> Were we not moved at this.

1. Read before the Society of Telegraph Engineers and Electricians, London, March 10, 1887.

But when, in this country and elsewhere, the requirements for domestic electric lighting came to be practically considered, it was found on the one hand that—in spite of the capabilities of the individual celebrated amongst our Parisian *confrères* as *le jardinier de M. Preece*—no private individual would, as a rule, willingly incur the prime outlay, trouble and comparative expense of a small steam or gas engine and a dynamo machine; and, on the other hand, that the cost and difficulty of laying down leads to supply even a populous district with electrical power from a central station was a very serious consideration. After 1882, when electric lighting was made a stalking-horse by the worst sort of company promoter, it was clearly seen that this mode of supply, involving an investment of capital even larger than that which had gradually been made in gas, would be out of the question for many years to come. I have no doubt that a system of distribution from a central station will ultimately be adopted to a large extent—but this will not be, I think, in the lifetime of those of us who have passed the middle-age; nor do I think that the distribution of electrical power from central stations will at any period altogether supersede the method of distribution, by means of elements in which electrical energy has been stored, to which I shall presently advert.

The electro-chemical means at present available for the storage of electrical energy cannot, either from a scientific or a practical point of view, be regarded as perfect; and it seems certain that they will be considerably improved in future years. The trite saying that the storage battery is still in its infancy is perhaps not inapplicable; but it would be a mistake to ignore the fact that important improvements have been made in this apparatus since (7 years ago) the cell of Gaston Planté was first modified by Camille Faure. Under the headings of "Storage Capacity" and "Weight per Horse-power hour," I have jotted down principally from my note-book, in tabular form, some figures, subject to correction and amplification, which in some measure illustrate this improvement, although there are other points of equal importance which require to be taken into account. The "lithanode" mentioned in these tables was the subject of a paper which I read at the British Association Meeting at Birmingham, and which will be found in the *Electrical Review* of September 17th, last year. It is peroxide of lead (with more or less sulphate of the metal) in a coherent and highly-conductive form, having generally a specific gravity between 7.5 and 7.9. I shall have occasion again to refer to this material presently. There are specimens on the table.

TABLE I.

STORAGE CAPACITY OF VARIOUS SECONDARY CELLS.

Name of cell.	Per lb. of Pb.		Per kilo of Pb.		Authority
	Foot lbs.	Watt hours.	Kilogram-meters.	Watt hours.	
Planté	12,000	4.52	3,654	10	
Faure	18,000	6.78	5,435	15	
E. P. S. L plates	48,000 (?)	18.09 (?)	14,600 (?)	39.8 (?)	Howard.
" R "	36,080	13.6	11,010	30	(?) Hospitalier.
" S nom. / 22 lb. cell	31,800	12	9,540	26	Fitz-Gerald.
Elwell-Parker (old form)	6,633	2.5	2,018	5.5	Pr'pectus
Lithanode battery (old form)	39,798	15	12,110	33	Fitz-Gerald.
Lithanode battery "Union" cell	47,170	17.8	14,671	39.16	G.Forbes.

TABLE II.

WEIGHT PER HORSE-POWER HOUR CAPACITY OF VARIOUS SECONDARY BATTERIES.

Name of battery.	Elements only.		Cell complete.		Authority.
	Lbs.	Kilos.	Lbs.	Kilos.	
Planté	.....	.....	396	180	Reynier.
Faure	.....	.....	88	40	Faure.
	.....	.....	165	75	Sir W. Thomson.
" (old model)	.....	.....	198	90	Reynier.
" (new model)	.....	.....	134	61	
E. P. S. L plates	.....	.....	133	60.4	Prospectus.
	.....	.....	110	50	Reckenzaun.
" S "	66	30	135	61.3	Fitz-Gerald.
Reynier (Zinc posve.	50.6	23	117.5	53.4	R. Tamine.
Reynier (Planté form.	105	47.6	.....	.....	*Idem.*
Lithanode battery (old form)	42	19.1	76	34.5	Fitz-Gerald.
Lithanode battery "Union" cell	42	19	70	31.5	G. Forbes.

In table i., I have taken the liberty of placing a note of interrogation after the values, relating to the storage capacity of the plates formerly manufactured by the Electrical Power Storage Co., taken from the paper read by my friend and old pupil, Mr. F. G. Howard, in June, 1885, at a meeting of students at the

Digitized by Google

Institute of Civil Engineers. No doubt Mr. Howard referred to the total storage capacity, instead of the useful capacity, of these plates; but even in this case the value given would seem to be much too high. Certainly the plates now issued by the Electrical Power Storage Co. are at least equal to those manufactured by them two years ago; and at the present moment the useful storage capacity claimed by them per pound of battery is, I believe, three ampere-hours on a rough average. In the smaller cells this value may be surpassed—in the larger it is scarcely attained. The present "thin-plate" Electrical Power Storage cells have a capacity of 2.8 ampere-hours per pound of battery. In practice, as for instance at the Colonial and Indian exhibition, this value, we know, is not always even approached. Now, taking the high value comparatively of three ampere-hours per pound of battery, the horse-power hour cell would weigh 129 pounds. But according to the values I have called into question, 41 pounds of lead in the battery would suffice to produce the horse-power hour; and this lead would constitute only one-third of the total weight of the battery—a ratio which is far too small, and requires to be increased to at least one-half, which is the *reductio ad absurdum* of the high figures put forward by Mr. F. G. Howard.

A high ratio of stored energy to weight is not always the most important consideration in a reversible lead battery; and the few data I have collected in tabular form would have been of greater interest if I had specified in each case the *rate of discharge*, since it is well known that the useful capacity becomes diminished as this value is increased. I will to some extent remedy the omission by stating, in regard to the lithanode battery, that when the rate of discharge is about .446 ampere per pound of plates, or .257 ampere per pound of battery, the useful capacity may be as high as 9.32 ampere hours per pound of plates, or 5.3 ampere hours per pound of battery. But, when the rate of discharge reaches .64 ampere per pound of plates, or .36 ampere per pound of battery, then the useful capacity falls to 8.6 ampere hours per pound of plates, or 4.8 ampere hours per pound of battery. These figures do not by any means represent the recent results obtained by the Union company. I have just been informed, however, that the figures I have given are not considered applicable to the "Union" cell, and that the results obtained in recent experiments are expressed by the following table.

UNION CELL.

Rate of discharge.		Capacity.	
Amperes per lb. of		Ampere hours per lb.	
Plate.	Cell.	Plate.	Cell.
.68	.41	9.2	5.5
.88	.53	7.1	4.3
1.2	.72	6.2	3.7
1.5	.9	5.5	3.3

Whatever may be said of the lead storage battery itself, it is quite certain, I think, that our electro-chemical knowledge in relation to it is "in its infancy." We should be thankful even for small mercies in this direction, for very few electricians or electro-chemists have given any real attention to the matter, which is one of vital importance to progress. Bnt we should be specially grateful to Dr. J. H. Gladstone and to the late Mr. Alfred Tribe, who gave a great deal of careful labor to "The Chemistry of the Secondary Batteries of Planté and Faure."[1] I am glad to say this before criticising, to the best of my ability, some of their conclusions from which I venture to differ—or to imagine that I differ.

In the first place there is a little matter—possibly a *lapsus*—of no great importance perhaps in itself, but which seems to me of importance by reason of the detestation in which I hold anything in the form of "white sulphate"—non-conducting sulphate—in the negative element of a lead storage cell. "White sulphate" is the only thing I will not forgive in a battery, and I often deprecate the maker of an element containing such an article. In their little work under the above mentioned title, Messrs. Gladstone and Tribe propound the following question and answer: "In a Planté or Faure battery, the mass of peroxide which is in contact with the (negative) metallic lead plate expends its energy slowly. How comes it to pass that if the same mass of peroxide be brought into connection, through the first lead plate. with another lead plate at a distance (in the same electrolyte) it expends its energy, through the greater length of sulphuric acid, in a tenth or a hundredth part of the time? The answer . . . . is doubtless to be found in the formation of the insoluble sulphate of lead, which clogs up the interstices of the peroxide, and, after a while, forms an almost impermeable coating of high resistance between it and the first metallic plate." Now it appears to me that this suggested explanation involves a misconception as to the conditions which are favorable to the passage of the local current, of which the direction is from the metallic support to the peroxide through the electrolyte and from the peroxide to the metallic support by simple conductive contact. Not that the resistance (electrolytic) between the supporting plate and its peroxide is *common* both to the local circuit and to the main circuit; for there must be a simple conductive contact between the plate and the peroxide at one or more points (otherwise the detached layer of peroxide would become inactive, and there would be no current in either circuit), and the main current would pass wholly through this contact—as indeed would the local current in its passage from the peroxide to the support. But it is evident that the local current, under the given electromotive force, will be inversely as the sum of the resistances in its circuit, and that one of these resistances—that which opposes its passage from the peroxide to the support—must be small (since otherwise the main current would be impeded). The remaining resistance in the local circuit—that which opposes the passage of the local current from the lead support to the peroxide *through the electrolyte*—must evidently be very considerable in order to comply with the conditions under which the current in the main circuit may be ten or a hundred times greater than that in the local circuit. In my view, the electrolytic resistance in the local circuit would be diminished instead of augmented, by interposing even an almost impermeable (but more or less moist) coating of sulphate of lead between the peroxide and its support, excepting at one or more points where the peroxide and the lead would be in perfect contact. To maintain perfect uubroken contact everywhere between the layer of peroxide and the lead supporting plate, would, I thing, be the best means of diminishing local action by augmenting the electrolytic resistance in the local circuit. And this, in substance was the burden of the paper read by Messrs. Drake and Gorham at the British Association last year.[2] The clogging up of the *interstices* in the peroxide might, I am ready to admit, be beneficial, provided this unbroken contact were maintained. It may be observed, however, that the suggested explanation appears to be further disproved by the figures given by the authors of the work referred to. During the first two hours, when the quantity of sulphate formed is a minimum, the quantity of peroxide reduced by local action is only 3.6 per cent. per hour. In the next hour, when the quantity of sulphate must have augmented, the percentage of peroxide reduced is shown to be nearly 8; and in the following hour it rises to about 10.

Passing to a matter of more general importance, the equation given by the writers I have named as applicable to the batteries of Planté and of Faure—and presumably also to all lead secondary batteries with the same electrolyte—is substantially as follows:—

$$PbO_2 + 2H_2SO_4 + Pb = \underbrace{PbO + H_2SO_4} + PbSO_4 + H_2O.$$

The compounds bracketed together react, however, upon each other, so that the final result may be expressed by

$$PbO_2 + 2H_2SO_4 + Pb = 2PbSO_4 + 2H_2O;$$

the final result being sulphate of lead on both plates.

This equation is very simple, and has been generally accepted as entirely satisfactory. As an expression merely of the chemical results observed, after a certain percentage of the peroxide has become reduced, it is perhaps unassailable. As an electro-chemical equation, applicable during the whole period of the discharge of a lead secondary battery with the given electrolyte, it is impossible, I think, to accept it. It is not the old fallacy—recently protested against by Mr. Swinburne, and which is to be found in this equation—of supposing that water, and not an acid or a salt, is the electrolyte in the voltaic battery, that I have now to dwell upon. I will endeavor to lay before you the other difficulties I have found in the way of its acceptance.

But in the first place it will be expedient to consider whether there has been any intention of putting forward or accepting the above formula as an electro-chemical equation, expressing the reactions on which the efficiency of the battery is dependent. Has there actually been any assumption that the whole of the peroxide is, or may be, converted into sulphate of lead? that a large proportion of isolated sulphate of lead—"white sulphate"—is necessarily produced in discharging the battery? that the reduction of the peroxide takes place, not in two or more stages, but continuously? and that the electromotive force of the battery is independent of the quantity of sulphate which has been produced from the peroxide? Because, if not, I might be setting up imaginary antagonists and incurring unnecessary trouble in endeavoring to overcome them.

The authors of the work already referred to make use of the expression given above: "The final result being sulphate of lead in both plates." Dr. Gladstone, moreover, has explained that, "When we stated that sulphate of lead is finally the only product of the discharge, we were referring to the disappearance of any peroxide, and did not mean to imply that in actual practice the whole of the spongy lead is usually converted into sulphate." Mr. Tribe, in *The Electrician* of July 10, 1885, wrote that "One of the conclusions was that both the peroxide of the negative

1. Their work, under this title, is published by Macmillan.

2. "On the Treatment of Secondary Batteries." See ELECTRICIAN AND ELECTRICAL ENGINEER, vol. v., p. 418.

Digitized by Google

plate and the finely-divided lead of the positive were converted into lead sulphate during discharge." Mr. George F. Barker, in his paper read at the Montreal meeting of the American Association for the Advancement of Science, says: "My experiments with the Faure battery confirm entirely those of Gladstone and Tribe as to the formation of lead sulphate." "On examining the plates, lead sulphate formed the entire coating upon both of them." Mr. C. T. Kingzett states that "As fast as the monoxide of lead, produced by reduction at the negative pole during discharge, forms, it is converted into sulphate. Upon complete discharge then there remains two supports of lead coated with sulphate of lead." And Prof. Oliver Lodge says: "The use of peroxide alone (without any support of lead) looks hopeful; but, when the cell is discharged and the peroxide reduced, the plate will no longer be a conductor—and it does not appear probable that such a cell could ever be charged up again." This conclusion, I may here state, is most emphatically disproved by the "lithanode" battery plates now before you, most of which have been charged and discharged—down to the potential of 1.8 volt—a great number of times, without losing their conductivity or exhibiting the smallest patch of "white sulphate." [Samples of exhausted plates were handed round.]

Mr. G. F. Barker further observes that, "Obviously, so long as any peroxide is present, the electromotive force is constant." The same experimenter also makes the following very suggestive note, showing that one at least of his cells had been, apparently accidentally, worked upon an improved system. He says: "In one of my Planté cells, the peroxide is beautifully crystalline and very hard. Not a trace of (free) sulphate has been formed in it, apparently, though it has been in use for six months, and has been frequently charged and discharged during that time."

On the other hand, Messrs, Gladstone and Tribe state (*loc. cit.* p. 32), in relation to the negative plate:—"At the conclusion of the action, we have always found more or less of the substance unaltered. Thus, as one instance, after a discharge lasting five days, and approximately complete, we found that only 68 per cent. of the deposit was lead sulphate." And Mr. J. Swinburne (in *The Electrician* of July 10, 1885) makes an important observation in the same direction. He says: "The appearance of the coating of an ordinary discharged peroxide plate does not prove the absence of sulphate, for only a very small proportion can be sulphate. Some years ago, when I made a large number of experiments on batteries, I found that in no case more than six or seven per cent, of the coating is used, even when the cell is completely run down. The expansion of the peroxide of lead in becoming sulphate perhaps blocks the coating up."

Let me at once observe that if Mr. Barker were right in stating that the E. M. F. is constant so long as any peroxide is present I should have less difficulty in accepting the above-mentioned formula as the electro-chemical equation applicable to lead secondary batteries. But, like Mr. Swinburne, I have found that long before the whole of the peroxide is exhausted the E.M.F. has fallen practically to zero. If the formula be true, as the electro-chemical equation of the battery, why should there be any fall in the electromotive force before the peroxide is exhausted? Is it because the peroxide becomes "blocked up" or clogged, or so diluted by the inert material, that the support or contact piece becomes rapidly "polarized" by hydrogen? If so, the formula may be true. But on open circuit, when there can be no polarization, and with a strip of solid peroxide without support, we should, if the formula be true, obtain the full E.M.F. corresponding to the nature of the chemical reaction indicated by it. We should expect this so long as any peroxide remained—certainly when only 25 per cent. of the quantity originally present had been consumed.

(*To be continued.*)

CORRESPONDENCE.

NEW YORK AND VICINITY.

Moving Day and its Changes.—Property Owners Object to a Handsome Pole Line.—Various Companies after the City Lighting.—Improvements in Police Alarm Systems.—Electric Railways in New Jersey.—Liberty's Torch Visible 23 Miles.—Telephone Poles Removed by the East Orange, N. J., Authorities.

OUR annual moving day brings perhaps more tribulation to electrical people than any other portion of the community. Extensive preparations are made by the quotation, district, telephone and electric lighting companies for numerous changes by their subscribers, while in many cases their own moving must also be provided for. Probably the largest undertaking of this kind is the transfer of the down-town telephone exchanges to the new building now approaching completion at 18 Cortlandt street, which has been erected since last May by the Metropolitan Telephone and Telegraph Co. The work of consolidating the exchanges would have proceeded with no embarrassment had proper underground facilities been provided by the subway company.

The Baltimore and Ohio Telegraph Co. is also making an important change, by moving its main operating room and official headquarters from No. 63 to No. 415 Broadway, corner of Canal street, where the old Brandreth House is being thoroughly refitted for general occupation by the railroad, express, and telegraph departments of the Baltimore and Ohio Telegraph Co. In order to have the work permanently done, it was originally proposed to bring the wires to the new quarters underground, but no conduits having been provided under the direction of the subway commission, rights of way and permits were secured for the privilege of placing the cables on poles. Three kerite and one bitite cables of 50 conductors each, are used in connecting the new quarters with the old cupola at 63 Broadway. The new operating room occupying the entire top floor, is very neatly fitted up with quartette tables and a handsome switch-board. Every precaution has been taken to provide for the thorough working of this extensive telegraph system, all of the inside wiring of the building being substantially done with Kerite insulated wire. The building although narrow, is not hemmed in by adjacent walls, ample light and air being secured through the windows fronting on Broadway, Lispenard, and Canal streets.

The Commercial Cable Co. removes its offices from the historic telegraph corner at 21 Wall street, to the opposite corner, in the basement of the Drexel building, near the location of the Pacific and Atlantic office 17 years ago.

The property owners on West 73d street are making strenuous efforts to prevent the completion of a new pole line to Yonkers, basing their objection to it on the plea that the poles and wires are a nuisance, and had been officially declared so by the legislature when it created the subway commission.

Since the organization of the East River Electric Light Co., which proposes to take a hand in the city lighting if it can get a chance, other electric lighting companies have come forward to secure a share of the work. The Brush and United States companies have worked in harmony, and their old price for lighting was 70 cents per night, which they have reduced to 65 cents this year. The contract was not awarded to them however, as a movement was on foot to permit new companies to enter the field. The Waterhouse Electric Manufacturing Co., of Hartford, and the American Electric Manufacturing Co., of New York, have both applied to the board of aldermen for permission to erect poles and string wires in all the streets and avenues of the city, and furnish the city with one public light free, for each 50 private lights paid for by subscribers. The applications were referred to the law committee, and will probably be sat upon at the proper time.

Five police alarm systems are being tried in the Twenty-ninth precinct. As yet only one system has been used. It is a small square box attached to a lamp post or telegraph pole on each beat, containing an automatic telegraph instrument which communicates with the station house and hospitals. When an ambulance is required the policeman touches his hospital alarm and communicates directly with the hospital authorities. The old system required the policeman first to go or send to the station, whence the sergeant telegraphed to the central office. Another system, which is used in the city of Chicago, will be tried in a few days. Little booths, just large enough for a policeman, will be erected on the street corners. A booth will contain an electric signal and a telephone. The policeman can stand at his post and communicate with the station by telegraph and telephone. A little instrument in the station house registers his wants on a slip of paper. One of these booths is at Eighteenth street and Seventh avenue now. Three other systems will be tried. The Brewer system, which has not yet been in practical use, will cause a red light to bob up and down around the glass of a street lamp when a policeman on that post is wanted from the station house. If he is several blocks away this little light will attract his attention. An automatic alarm box is attached to the lamp post, by which he can communicate with the station. The system used in New Haven will also be exhibited. It is virtually on the same principle as that used in Chicago, except that no booths are used. It is simply a box large enough to contain a telephone and telegraph instrument, which can be placed conveniently against a house or on a telegraph pole.

The experimental section of an electric railway at Orange, N. J., has now been in operation sufficiently long for the open mouthed natives to satisfy themselves that a car can be moved without horses. Electric railway schemes are also cropping out in other parts of the conservative state, Asbury Park and New Brunswick being the latest converts to the innovation.

It has been officially announced by the pilot commissioners that the light on the Statue of Liberty is visible on a clear night at a distance of 23 miles.

The war over the telephone poles in East Orange, N. J., has terminated for the present by the township authorities, the road overseer with a gang of men having removed the poles on Park avenue. The demolition of the line was witnessed by employés of the New York and New Jersey Telephone Co., who announced that legal proceedings against the township would be commenced by the company.

NEW YORK, April 25th, 1887.

Digitized by Google

PHILADELPHIA.

Councils and Electric Franchises.—City Underground Wires.—A New Telephone Co.—The Philadelphia Telegraphers' and Electrical Association.—Death of Mr. George H. Grace.—Proposed State Legislation on Underground Conductors.—Railroad Brake Tests in May.

THE first meeting of the new board of highway supervisors was held on the afternoon of April 14th. After chief Walker had been granted permission to extend the city's underground wires, the applications of the underground electric companies were considered. There were many corporations seeking privileges, which, in their entirety, would occupy nearly every main street in the city. Director Wagner looked up the laws and ordinances, and found that only one company had entirely complied with the requirements laid down. This was the Penn Electric Light Company, which was granted permits to put down conduits on South street from 8th to 25th, and on Chestnut street from 2d to 23d. After the permit had been granted for Chestnut street, chief Ogden remarked that it would be the last conduit which can be placed under the street. The requests of the Morse, Edison and Keystone companies were postponed.

The work of laying the underground electric light wires on the west side of Broad street from Columbia avenue to Fairmount avenue, which has been in progress for two weeks past under the supervision of chief Walker, of the electrical department, has been completed, and the lamps will be lighted for the first time this evening (April 15th). The conduits are 4,700 feet long and contain 4,800 feet of cable, which connect with 15 lights erected on poles. The lamps are 22 feet above the pavement.

Articles incorporating the New Jersey Telephone Company were filed at Woodbury yesterday (April 14th). The capital is $250,000, and the 7 counties south of Trenton will be the field of the company. The officers are: C. W. Starr, president; H. C. Loudenslager, secretary; W. H. Livermore, treasurer; M. W. Newton, J. E. Highley, G. H. P. Barber, Joseph B. Roe, J. M. Henderson and T. Earl Budd, directors.

The difficulties between Jesse W. Starr, Jr., of Philadelphia, who contracted to furnish Belvidere, N. J., with electric light, and his creditors, were to-day adjusted. He pays the labor claims in full and gives security for the material furnished in construction, and the creditors have withdrawn their suits. The sheriff seized the property three months ago, on the night of the first trial, and has since held it under writs of attachment. He released it the latter part of last month. The Belvidere Electric Lighting Company will complete the contract, and the town will be lighted by electricity within a short time.

A number of gentlemen effected a permanent organization on March 19th, under the title of the "Philadelphia Telegraphers' and Electrical Association." The object of the association is to encourage a fraternal feeling, and promote self-improvement in electrical science and other kindred subjects. The membership will be composed of persons engaged in the telegraph, telephone, electric light and other electrical pursuits, including manufacturers of supplies. This is a much better method for the operators to improve their condition than to organize secret societies for "striking" purposes.

Mr. George H. Grace, superintendent of telegraph lines on the New Jersey Central Railroad and its branches, died at Easton on April 13th. It is rumored that Mr. James L. Mingle, of the W. U. Co., of this city, will succeed him.

Senate bill No. 254, providing for the incorporation, regulation and protection of companies for the construction, maintenance and operation of electrical subways and underground conduits, which has already passed the Pennsylvania Senate and is now before a House committee at Harrisburg, is of special importance to Philadelphia in its present effort to secure well paved and well cleaned streets. It provides that such corporations shall be authorized to construct subways and underground conduits for carrying electric wires and conductors of all kinds under, along and through any of the public streets, lanes, alleys, roads and highways, and under and across any of the waters and streams in any county, city, town, borough or district of the state mentioned in the charter of such corporation, and to enter upon and open at any time any street, lane or alley, either for the purpose of construction or repair. The companies are to do as little damage as possible to the streets and not obstruct their free use where it can be avoided, and they are to be subject to such reasonable regulations as the councils of cities or boroughs may adopt in regard to grades and the convenience of the public. Provision is also made for the rental of the underground wires; also penalties for interfering with the property of the corporations. The bill is the subject of the severest criticism by officials of the city, in that it places the opening of the streets entirely beyond the regulation of any authority except the corporations who wish to use them.

In speaking of these provisions of the bill, David R. Walker, chief of the electrical department, characterized it as an infamous measure. "Under it," said he, "corporations are allowed to do just as they please. It gives them the right of eminent domain. They can construct a subway 10 feet wide or 2 inches wide, as they choose. They can break up our streets. They are not bound under the bill to do the work under the supervision of any city official whatever, and councils have no voice as to how the work shall be done. It is a case of go-as-you-please. There is nothing that compels them to restore the streets or arrange them as they were before being opened. They can tear up any kind of pavement, patent or improved, if they desire to do so, for there is no restriction. If the legislature should pass the bill requiring legislation from councils under rules and regulations that councils might enact it would be a different matter altogether. Under the present system of constructing subways or conduits the city reserves the right to use one or two ducts, and the companies are bound to furnish the city a number of wires, this being the only consideration to the city for the use of the streets. By means of this we are enabled to put the police and fire service underground without any great expense. For this reason the present system is worth hundreds of thousands of dollars to the city. The bill now before the legislature would do away with these privileges altogether. The city could not keep any of the wires without paying the price the companies choose to ask."

An extended test of various kinds of railroad brakes will be made at Chicago in May next under the auspices of the Chicago, Burlington and Quincy Railroad. There will be but one system of buffer brakes exhibited, but Card, Carpenter, Eames, Park and Westinghouse, all well-known patentees, will exhibit systems wherein compressed air or vacuum furnishes the force for braking, but a simultaneous application is secured by electricity. The latter is a desideratum long sought for, and is especially desirable in cases of braking freight trains. H. D. Garrett, master mechanic of the Pennsylvania railroad at the West Philadelphia shops of that road, says his company is at present much interested in a series of experiments with brakes in which electricity plays an important part. These experiments are being made at Altoona, and the results have not been made public as yet.

PHILADELPHIA, April 16, 1887.

BOSTON.

Annual Meeting and Election of the American Bell Telephone. The Government Telephone Suit.—Output of Telephones by the Bell Co.—Discussion of Car Lighting at the New England Railroad Club.—Business of the Electric Accumulator Co. in Boston.—An Exclusive Electric Light Franchise Refused by the City of Dover, N. H.—Perils of Electricity.—Burial of Mr. Robert S. Boyd.—The Late Daniel Davis.

THE annual meeting of the American Bell Telephone company was held 29th ult.—President W. H. Forbes in the chair.

Mr. Charles Eustis Hubbard was chosen clerk of corporation, Mr. William R. Driver, treasurer, and the following named directors were also elected: Francis Blake, Charles P. Bowditch, George L. Bradley, Channing Clapp, Alex. Cochrane, William H. Forbes, Charles Eustis Hubbard, Gardiner G. Hubbard, John E. Hudson, Robert B. Minturn, Charles E. Perkins, Thomas Sanders.

An opinion has just been filed, April 4th, by Judge Colt, in the United States circuit court, in the case of the United States *vs.* American Bell Telephone Co., denying defendant's motion for leave to plead certain facts, in addition to filing a general demurrer to the bill. The judge says that to grant this motion would be contrary to the regular and orderly course of pleading in equity cases, as it has been decided that there is no equity rule which allows a defendant to demur to the whole bill, plead to the whole bill and answer to the whole bill at the same time, and that the effect of such pleading is, that the plea is taken as waiving the demurrer, and the answer as waiving the plea. Upon the ground urged by defendant that it is within the discretion of the court to grant such a motion, and that the court has power to mould its rules in relation to the time and manner of answering, the judge says that this power should not be exercised unless for good and sufficient reasons and to prevent injustice. The defendant has asked leave to plead, in addition to filing a demurrer, that the bill refers to litigation previously had with reference to the scope and validity of the patents in controversy, but that it does not state the result of such litigation or the decisions therein, or that the questions of fact or law sought to be raised by this bill have been argued before the supreme court in suits for infringement of these patents, and are now held under advisement by that court, and that, therefore, defendant's proper course is to plead the same, and for this reason it asks leave of the court to plead the determinations affecting the validity and scope of the patents. It also asks leave to present by plea copies of certain letters from the commissioner of patents to Elisha Gray, the contents of which the bill purports to state, and it further represents that it would be unjust to require the expensive litigation already had to be repeated, and that it would be indecorous to re-try any questions pending before the supreme court until that court shall have pronounced its judgment. The judge says upon these points that, so far as the plea proposes to set up prior litigation respecting these patents, no bar or estoppel is shown such as would constitute a good plea, because it does not appear that

Digitized by Google

the parties or the subject-matter are the same, and that no sufficient justification for granting this motion is shown thereby. He concludes by saying, "In a cause of this magnitude it seems to me the ends of justice are more likely to be reached by following the regular and orderly procedure of courts of equity, and that the court should hesitate, unless from grave considerations, to depart therefrom."

Our legislature continue to make adverse reports on telephone and telegraph legislation, on the various matters brought before them—such as placing corporations doing such business under the control of the railroad commissioners; prohibiting them from holding stock in other companies; regulating their conduct and rates, etc.

The output of telephones by the American Bell company for the month ending March 20th, and the first three months of the current year, is herewith tabulated:

March—	1887.	1886.	Increase.
Gross output	4,372	2,819	1,553
Returned	1,452	1,232	220
Net output	2,920	1,587	1,333
December 21 to March 21—	1886-7.	1885-6.	Increase.
Gross output	11,751	8,822	2,929
Returned	5,326	4,188	1,138
Net output	6,425	4,634	1,791

Comparison with previous month—

	March.	Feb.	Jan.	Dec.	Nov.	Oct.
Gross	4,372	3,405	3,974	3,946	3,340	3,259
Returned	1,452	1,918	1,956	1,686	1,825	1,745
Net	2,920	1,487	2,018	2,260	1,515	1,514

The New England Railroad Club on the evening of the 13th, held its regular monthly meeting at its rooms in the passenger station of the Boston and Albany railroad, the topic for discussion being the lighting of railroad passenger cars. There was a large attendance of members and other gentlemen interesed in the subject. In one corner of the room there was a practical demonstration of the Pintch light, two of the lamps having been erected. Ex-Gov. Howard, of Rhode Island, representing the Pintch company, explained that system of gas lighting at some length. He said the actual cost is about $12 per car per year, exclusive of cost of fitting up the cars and the plant for furnishing. Including those items, the cost is not over $40 per car per year. He expressed his belief that where there is a 300° test required of oil used in cars, there is not a railroad but violates the law. Mr. Adams and Mr. Curtis both took exception to the latter statement, claiming that frequent tests made by the state inspector demonstrated that the oils were up to the test. Mr. Coney explained that he had had large experience in manufacturing kerosene, and he very much doubted if the oil used would stand the 300° test when made by the best instruments. He declared he did not believe any accident ever occurred with oil having a fire test of 150°. President Lauder said he hoped the railroads and the public would not lose their heads because of recent accidents. He thought the present system was a good one, and plenty of light can be obtained, if enough lamps are put in, though the more lamps put in the more heat is generated. He knew of no instance where cars had been set on fire by the lamps, as a very slight shock invariably puts the light out. He thought the heavy expense of lighting with electricity would prevent its general use at present. Gen. Elbert Wheeler, treasurer of the Wheeler Reflector Co., stated that, with proper reflectors, he could give the same amount of light with 12 electric lamps as is given by the 20 in the Boston and Albany cars. Mr. Marden of the Fitchburg railroad said that he had put in one car five lamps with the Acme burner, and he believed that the car is the best lighted of any running out of Boston, with, perhaps the exception of the Albany's electric lighted cars. He believed, however, in electric lights, and is fitting up a car which is to be lighted by storage batteries furnished by the Electrical Accumulator Co. Outside of the work being done by him, the entire expense of fitting up the car including the accumulators, is only $375. He is putting in 12 lamps.

The Electrical Accumulator Co., of New York, are represented here by Mr. John T. Moriarty, at 19 Pearl street, the old offices of the Domestic Electric Co. They are well under way, putting their batteries into use in connection with electric light installations, etc., having facilities for charging their batteries here. A storage battery plant for electric lighting has been put into the new Massachusetts Hospital Life Insurance Building on State street, by Mr. Moriarty, and is giving good satisfaction. The noise and jar of running engines and dynamos during office hours is entirely obviated; the steadiness of the incandescent lights is very noticeable.

The police signal system continues to agitate the residents of our town. There seems to be an opinion that the present municipal government is opposed to such aids to the police system.

At Dover, N. H., the board of aldermen, on the 25th ult, refused to grant the petition of the Thomson-Houston Electric Light Co. for a franchise to erect and maintain an electric light plant in their city, exclusively, for five years. A correspondent of one of our daily papers, writes to warn people of the evils to come, when the electric motor will infest our streets. I quote one of the evils:

"This is the danger to watches in the pockets of passengers who may come within the influence of the dynamos used upon the cars.

The magnetic field of dynamos covers a distance variously estimated at from 10 to 30 feet, or perhaps even more, within which distance any watch would be liable to become magnetized, and thereby rendered, if not entirely useless, at least very unreliable until demagnetized—a process which, even if perfectly successful, is expensive, and a very undesirable necessity to incur.

The public is even now liable to the same accident from electric light machines, some of which are situated in the basements of buildings, and a watch in the pocket of a person standing in a store over such a machine might easily collect and retain sufficient magnetism to destroy its time-keeping qualities.

Many of the perplexing variations of watches are, without doubt, occasioned by magnetic currents induced by causes not always easily explained, but which are probably due to personal temperament, or physical electricity; and many watches are found to have become magnetized from being in the vicinity of magnets and dynamos, as well as from the effects of lightning.

Even though a watch has not itself become magnetic, its motions will be disturbed by any articles of steel which may have become so, carried about the person; and cases have been known where this trouble has been caused by the *steel springs of corsets*, or by some of the magnetic or galvanic appliances frequently worn."

Perils may indeed attend too close proximity to the source of danger italicised in the last paragraph.

Mr. Robert Southgate Boyd, special agent for the American Bell Telephone Co., who lost his life at the terrible fire at the Richmond hotel, Buffalo, was buried on the 6th inst. The funeral services were held in Cambridge, Mass., the residence of Mrs. Boyd. A delegation of gentlemen from the office of the American Bell Telephone Co., attended the services. It is pleasant to chronicle the fact that the Bell company proved itself to be a corporation *with* a soul. Under the direction of the general manager, Mr. Hudson, two special agents, Messrs. Hovey and Doolittle, were sent to Buffalo, to find out the facts, of the case, and to recover the body of Mr. Boyd. No effort was spared by the management and the gentlemen named, the result being the discovery of the remains, a bunch of keys and a part of the frame of a traveling bag, belonging to Mr. Boyd, near the body. No words of mine can add to the estimation in which Mr. Boyd was held by those who knew him.

The following justly appreciative notice of the death of Mr. Daniel Davis appeared in the daily press, contributed by T. H. "Daniel Davis, died at Princeton, Mass., Tuesday, March 22d, at the age of 74. Probably no man in this country had such a thorough knowledge of electricity 40 years ago as Mr. Davis. Born in Princeton, of a mechanical family, he worked on his father's farm until he was 21, and came to Boston in 1833. His first work in this city was pumping soda for Mr. Darling, who then had a large soda factory in Franklin avenue. Being greatly interested in electrical experiments, he soon became acquainted with Dr. William King, who had a shop on Cornhill, manufacturing static electrical machines and also constructing and putting up lightning rods. Mr. Davis soon found employment with him. His first job was constructing and putting up the rod on the court house in Boston. This was made of flat copper ribbon, and is now in as good order as when first placed in position. He also constructed and put up the rods on the buildings in the Charlestown, Navy Yard. In 1835 he began business for himself at No. 11 Cornhill, in partnership with the late John Temple, under the firm name of Davis & Temple. In 1837 Mr. Davis bought out the interest of his partner, and commenced the manufacture of electro-magnetic apparatus. At that early day there was little practical use for electricity, and his principal business was manufacturing and constructing apparatus to illustrate the general principles of voltaic and dynamic electricity. In connection with the late Dr. Charles G. Page, he engaged in many electrical experiments, their joint efforts resulting in discoveries now used in many applications of electricity to practical purposes. They continued their experiments together until the fall of 1839, when Dr. Page accepted a position in Washington as examiner of electric patents. Mr. Davis's business increased very rapidly, he being the only man in the United States at this time who made electro-magnetic apparatus In 1842 he published "Davis's Manual of Magnetism," this being the first work published on that subject in the world. It was used as a text-book in all the principal scientific institutions in this country and England. He was a man who did not believe in patents. Had he patented some of his inventions he would have died a millionaire. He invented the art of electrotyping in copper wood cuts and type such as are used to-day, and gave his invention to the world. In 1846 he electrotyped in copper the arm of a child, which has been lately claimed as a new invention. This arm is still in existence. In 1840 Prof. Gareaux, of Paris, arrived in Boston with the invention of Daguerre. Mr. Davis made a set of apparatus and probably took the first daguerrotype taken in this country. Elias Howe, the famous sewing machine inventor, worked for him and made his first machine in his shop. Mr. Davis was also the first man in this country who did electro gold and silver plating, and taught the art. In 1844 Prof. Morse had just introduced his telegraph, but it was a very rude and impracticable machine, and it was put into Mr. Davis's hands for improvement and he put it in its present state. He received several gold medals from various exhibitions for his inventions and skill as a manufacturer. His

Digitized by Google

shop was the headquarters for professors, scientists and electricians for many years. The writer has seen Dr. Hare, Professors Webster, Hitchcock, Silliman, Henry Abbott, Farmer and Channing, and most of the scientific men of the time in his store. Mr. Davis would be in his shirt sleeves trying some new experiment, with the professors crowding around him as much interested in his work as himself. In 1852 he retired to his farm in Princeton, where he passed the remainder of his days in agricultural pursuits. He was a kind-hearted man, and the soul of honor and integrity."

BOSTON, April 16th, 1887.

CHICAGO.

Failure of Council to Pass the Electric Light Appropriation.—The Buffalo Hotel Fire: The Late Robert S. Boyd.—The Edison Light Co. Secure a Franchise in Chicago.—A Patent Right Raid on City Fire Departments.—Mr. W. H. Johnson Located in Chicago.—Proposed Consolidation of Electric Light Interests.—A New Electrical Firm.

THE electrical people, as well as the community in general, have been quite encouraged for some months back, by the belief that a proposition before the council leading to lighting the inland waterways of our city by electricity would be acted upon, and the appropriation ($75,000) granted before the adjournment of that body. We were all doomed to disappointment, however, and feel that a grand opportunity has been lost, at least for a time.

The great necessity for some such scheme lies in the fact that so much time is lost to our citizens during the business hours of the day at the bridges.

The saddest phase of the hotel disaster at Buffalo, is of course, the loss of human life, and to us who have for years known one of the unfortunate victims, the blow comes home with especial force. Others who perished in that fiery furnace had friends equally near and dear to them; but few had so extended a range of acquaintance, as Robert S. Boyd, and fewer still, so large a proportion of warm friends. The great saving clause in the whole affair, the only redeeming feature, was the electrical alarm for waking the guests, and the promptness with which it was turned in by the night clerk, Mr. Wm. H. Alford, whose ready appreciation of the situation saved very many from cremation.

The Edison people here have for the past three or four years, endeavored to obtain a franchise from the city for the purpose of opening up a central plant incandescent system. The petition had grown sour and mouldy from age, as was generally thought, when suddenly, like a jack in the box, up it came, at the city council meeting of the 21st of March, and went through at lightning train speed. There was a remonstrance, but like all other ponderous bodies, once they get "set in their way," nothing stops a city council. The ordinance gives the right to open all streets, alleys, sidewalks, etc.; to go pretty much anywhere, out of sight. The company must extend its conductors and supply current for any district when ordered by the council, provided there is sufficient patronage in sight to pay six per cent. on the investment. The franchise is for 25 years. A bond of $50,000 is required to cover any damage to city property. The law was subsequently changed at the earnest request of its "off-sided" friends, so that only light and power should be furnished by the company, and the franchise should not be strained to allow the telephone and telegraph fellows to occupy the conduit, and the permission of property holders adjoining the sidewalks should be obtained before the conduits should be placed in the sidewalk area. As a whole, however, the act was accepted by the mayor, and has become a law.

For a long series of years, under Prof. Barrett, the stable doors of our fire department houses have been automatically opened by the release of an armature and the action of springs, at the first break in the circuit, when an alarm of fire is turned in. Like hundreds of such combinations a few years ago, this was a local application in a practical way, and no patent was applied for at the time. Since that time some one seems to have obtained a patent for this method of releasing the doors, and the Louisville *Commercial* of the 15th, contains an article which details the action of a syndicate claiming to own the patents aforesaid, and which swooped down upon Louisville with a claim of $24,000, as pay for its use past and future. Half a dozen towns have been assessed and paid the assessment, but Louisville don't seem to want to pay in that manner. The article says:

"It was a beautiful bluff, but the representatives of the syndicate will find themselves called and they'll lay down a bob-tail. Senator McDonald was brought along by the Indiana gougers for the purpose of strengthening the hand, and congressman Caruth was added on this side of the creek as additional strength to the layout. But the city is not to be bulldozed, and the representatives might as well pull up stakes and go to some smaller city and make their gigantic bluff. They tried it in Chicago, but it wouldn't work. Why don't they tackle New York, Philadelphia, Boston, and other large eastern cities."

All which goes to prove that the city don't purpose being bluffed into laying down quietly, and the local reporter needs a missionary to show him the wickedness of poker. Speaking of Louisville and its people, brings up the fact that Mr. Wm. H. Johnson, an old, old timer, electrical mechanician, something of an inventor, and always a genial, good fellow, has come to Chicago to remain, and taken charge of the construction work of the Electrical Supply Co. here.

We have had lots of speculation latterly, on the subject of consolidation of our central electric light plants. No less than four or five parties have been mentioned as anxious to merge the several interests, and run the whole as one organization. The parties named by rumor, are: the present Conduit company, which is successor to the former Sectional Electric Underground Co., the heads of the Chicago Telephone Co., the Western Electric Co., the Thomson-Houston Illuminating Co., the Southside Chicago Light Renting Co., and the Western Edison Co., under the new name.

A new Chicago firm is the Central Electric Co.; M. T. Greene, president, George A. McKinlock, treasurer, and Wm. H. McKinlock, secretary; the latter gentlemen from the Detroit Electrical Works. The firm is located at 38 and 40 LaSalle street. "All kinds of electrical appliances made and sold," covers the scope of the enterprise as concisely as possible.

CHICAGO, April 17th, 1887.

[FROM ANOTHER CORRESPONDENT.]

The New Building of the Chicago Telephone Company.—The Electrical Accumulator Company Open Business in Chicago.—Prof. Barrett's Investigation of the Dangers of Electric Lighting.—The American Electric Manufacturing Company to Open an Office in Chicago.—Fluctuations in the Price of Electric Light Carbons.—Electric Lights at Kankakee.—Reported Combination of Eastern Capital to Control Chicago Gas Interests and Introduce Electric Lighting.

THE Chicago Telephone Company have about completed their plans for the erection and furnishing of a seven-story office building, to be put up by them on their land at the northeast corner of Franklin and Washington streets, one of the most desirable locations in the city. It is expected to be finished and occupied early in the spring of 1888, and it is with pleasure that we give at this early date such details as may be had. The building will be fireproof throughout, the first story of stone and the remainder of pressed brick, and will cost in the neighborhood of $75,000 to $100,000. The fourth floor will be arranged for the general offices of the company; the superintendent, assistant superintendent, district construction foremen and repair departments, occupying the second floor, The basement and first story will be used for supplies and instruments, with the office of the storekeeper in the front part of the first floor. The operating room will be on the third floor. The Central Union Telephone Company will leave the Pullman building and occupy the sixth floor of the new building for their general offices. The building will be furnished with passenger and freight elevators. The company propose to put down a drawing-in system of 16 2½ inch iron pipes, from La Salle street, and will put in them Patterson cables of 200 conductors. There will be about 3,100 wires entering the building. The present offices on La Salle street, with 1,400 wires, and that at the corner of State and Randolph streets, with 800 wires, will be closed up and the wires brought into the new building. A new switch-board outfit will be purchased, but the style has not yet been determined upon. Besides the underground work contemplated, as above, a line of about 250 wires will be put down on West Madison street, from Halsted street to Ashland avenue, a distance of one mile. The Chicago Telephone company is now serving, in and around Chicago, about 6,000 subscribers, their subscription list in the city alone having about 4,300 names.

The Electrical Accumulator Company, of New York, have arranged for the development of their accumulator business in this section, and have opened an office at No. 227 La Salle street. Messrs. J. W. Johnson and A. C. Holland are associated with Mr. C. N. Fay in the management of this enterprise. Their first installation is now being placed in the factory of the Western Electric Company, and is intended to supply 50 incandescent lamps of 16 c. p. each.

Prof. J. P. Barrett, superintendent of the city fire department, has sent a circular letter to managers of telephone exchanges, and others, asking for information, with particulars as minute as possible, in relation to losses of life and property caused by electric light wires. He states in his letter that the question is an all important one, and that the dangers to life and property arising from improperly protected currents of electricity demand urgent attention; that in view of the facts he proposes to place before the national association of chief engineers, in September next, some suggestions tending to reduce these dangers to a minimum. The facts that Prof. Barrett will collect and summarize while he is studying this subject will be of wide interest. High tension currents are dangerous and ought to be kept within bounds, and most of the electric light systems now in vogue use high tension currents.

It is expected that the American Electric Manufacturing Company will soon have an office and salesroom in this city.

Digitized by Google

The president of the company said, last week, that they had decided to make Chicago their headquarters for western business.

Last week first-class electric light carbons were in the market at about $12 per 1,000. Now they are held at higher prices, and it is a matter of common report that purchasers will soon be at the mercy of Mr. E. C. Hawks, agent. If any one is doubtful as to the present strength of the combination, let him write to his favorite manufacturer for quotations. The manufacturers claim that while in competition they did not get a fair price for their product, and that the result has been a market full of inferior carbons, hurting their business. From a consumer's point of view, of course, good carbons are essential to good lighting, but there has been no difficulty in getting good carbons at low prices, and it comes hard now to accept the changed conditions. Carbon and the making of it into pencils do not appear to most people to be very easy matters to control, and consumers generally express the opinion that the manufacturers cannot long avoid competition.

Kankakee saw electric lights within its limits for the first time last Wednesday. This enterprising town wanted its streets well lighted, and a company was quickly formed, who selected a Western Electric outfit. All the lights have burned without a hitch since they were first started, and the people and their papers express themselves as delighted with the changed appearance of their streets these evenings.

Eastern capitalists seem to be fairly tumbling over each other in their haste to invest money in Chicago—so one of our daily papers tells its readers by way of comment upon its report of the attempt of a New York syndicate to purchase a controlling interest in the gas companies here. The plan is said to be to unite all of the gas companies into one combination, this combination to build electric light works in connection with each gas works, and thereby control and supply all the artificial lighting of the city. Gas companies can certainly do electric lighting in connection with their gas business at considerably less cost than independent companies. Such combinations are now working in many places, the number is constantly increasing, and the results are uniformly satisfactory. Has not the time come for the gas companies in large cities like this to furnish the right lights for the right places? Here our streets are without exception all lighted in the old-fashioned way, and our rivers, where light is needed so badly, are not lighted at all.

CHICAGO, April 19, 1887.

SAN FRANCISCO.

Flourishing Business on the Coast.—Electric Lighting and Electric Railways.—Opposition of the Gas Light Co. to Electric Lighting.—Franchises for Subways Still Sought.—Postal Telegraph Co.'s Affairs.—Dr. Cornelius Herz and his "Push Button" Telephone.

EVERYTHING in California is "booming" just now. Hamlets are becoming towns and cities, men who were content to be called farmers a few years ago, are now "landed proprietors," so on with fruit growers, wine growers and sheep herders. If the electric boom continues, not a town or village in the state will be without an electric light, and even farmers may attempt to generate electricity by the revolutions of their windmills. Electric railways are now engrossing public attention. The latest is an incorporated company to operate an electric railway between San Jose and Santa Clara, a distance of four miles, and if it proves satisfactory, another branch will be operated from San Jose to Congress Springs. It is thought the Daft system is the one determined upon, although the Short has many advocates and admirers. San Jose is justly called the "Garden City," and prettier drives than those to Santa Clara and Congress Springs are not to be found in California. As the climate is warm and free from fogs, it is an invalid's paradise; open electric cars would be liberally patronized at all seasons. The electric road in process of construction in this city, is no longer in doubt judging from the manner in which capitalists are looking for the stock; and instead of one we may look for many in San Francisco.

If the "sack" of the San Francisco Gas Light Co. does not allure honest supervisors from the path of virtue—which all politicians assure their constituents they intend to follow—the California Electric Light Co. will probably secure the contract for lighting this city for the next two years. Thieves, burglars, garroters, and some politicians, will unite with the "bosses" in opposing the electric light in favor of the gas, the "sack," and their own nefarious calling, but, as Cornwall is an old politician, and John Farren an ex-supervisor, and George Roe is familiar with Canadian "bull-dozing" the chances are that these wily veterans will be able to checkmate the opposition.

Mr. McGrew is again in the field for an underground conduit franchise; and Mr. Ladd, like the famous guard, never retreats, but hammers persistently on the supervisorial cranium.

The Postal Telegraph and Cable Co. are open to the East and to Europe, and are doing a very satisfactory eastern, with a first rate local business.

Mr. Samuel Rosener, who has been temporarily looking after Mr. Mackay's and his brother's interests on this coast—until a General Superintendent was appointed—has returned to his own field; carrying with him the esteem and respect of all who came in contact with him. It is to be regretted that there are few Roseners in the telegraph business. A man of wealth and commercial standing, he was as approachable and affable, as a gentleman usually is. Like his brother, Mr. Henry Rosener, he considered the laborer worthy of his hire, and no man worked overtime for them without extra compensation. Mr. D. S. Robeson is now General Superintendent of the Postal company on this coast. A very pleasant chat with him and a good look at his countenance, indicate a broad-gauge practical man—one well equipped to run a successful opposition. Although he would not outline the intentions of his company, Mr. Henry Rosener assured me it was their intention to build in all directions, and to secure other eastern outlets. With all this accomplished, the unbending Western Union Cederic may think it time to cut the collar of bondage from the necks of their operating Gurths.

I notice that "Doctor"—now Chevalier—Cornelius Herz, has astonished the king of the Belgians and the people of France, by his wonderful push-button telephone. The Doctor has been experimenting on this contrivance for years. Even while in San Francisco in '75 and '76, he was hard at work on it. His apparatus was of human shape, and the telephone was an ear just like the human ear, and when spoken to by the Doctor, a button dropped out of a pocket. It was so satisfactorily experimented with, that the late Milton S, Latham, Lyons the brewer, J. C. Flood, M. J. Keating, Geo. S. Ladd, Paul Seiler, and Stephen D. Field, took stock in the "push" of Doctor Herz, who was made general manager. So confident have they been of future success that they still hold the stock, except Mr. Field, who sold his out in Paris, years ago, even at a loss. Mr. J. Keating offered his shares on the Paris "Bourse" but could find no takers. Perhaps General Boulanger will endeavor to buy them, for fear Bismarck may thus secure a controlling interest in Herz's "push."

SAN FRANCISCO, April 15th, 1887.

LETTERS TO THE EDITOR.

Notice to Correspondents.

We do not hold ourselves responsible for the opinions of our correspondents.
Anonymous communications cannot be noticed.
The Editor respectfully requests that all communications may be drawn up as briefly and as much to the point as possible.
In order to facilitate reference, correspondents, when referring to any letter previously inserted will oblige by mentioning the serial number of such letter, and of the page on which it appears.
Sketches and drawings for illustrations should be on separate pieces of paper.
All communications should be addressed EDITOR OF THE ELECTRICIAN AND ELECTRICAL ENGINEER, *115 Nassau Street, New York city.*

THE USE OF THE WORD "TELEPHONE."

[66].—In my historical paper on the word "Telephone," published in the ELECTRICIAN AND ELECTRICAL ENGINEER, for April, the concluding paragraph reads:

"I have thought it worth while, therefore, to make a compact record of the instances of its use otherwise which I have been able to find."

It occurs to me that I should explain that this paragraph refers only to its use in the English language. Sondre's system is also noticed in Brey's "Dizionario Enciclopedico," 1840, and Dingler, 1835, v. 58, p. 360; and as we find in "Der Praktische Machinen Constructeur," 1869, p. 281; "Deutsche Industrie Zeitung," 1869, p. 114, and Bryeriche's Industrie und Gewerbe-Blatt," 1871, p. 84, the ordinary speaking tube was known in Germany as "the Telephone."

These instances were referred to in the opinion of the Examiner who decided the telephone interferences.

BOSTON, Mass., April 6, 1887. T. D. LOCKWOOD.

A FURTHER WORD ON "UNDERWRITER" WIRE.

[67.]—I have read with much interest the report of the Electric Light Convention recently held in Philadelphia, and am glad to note the action taken in appointing a committee of competent gentlemen to investigate the question of insulating electric light wires. Now that the defective and dangerous condition of the present plants is admitted by the representatives of the electric light companies, there would seem to be no reasonable excuse for continuing the use of what is known as "underwriters wire."

Mr. Haskins recommends the employment of instruments for testing the insulation and conductivity of the circuits. In this he is evidently in advance of the times. The naked eye is the only instrument required at present. In my travels between the Rocky mountains and the Atlantic coast I have failed to discover a single case of what can be called first-class electric light construction. The wires employed being very heavy compared with telegraph and telephone wires, their supports should be of the

Digitized by Google

most substantial kind. The poles, on angles, are almost invariably insufficiently guyed, the poles not properly located, and in many instances, they will not remain in their proper position 24 hours. The wires soon become slack and come in contact with other wires and objects that destroy what little margin of insulation there may be. As originally strung, the wires are passed through tree tops and left in permanent connection with green limbs.

A short time since, I met a gentleman who has had as much experience in line construction probably as any one in this country, having visited every northern state and territory from ocean to ocean. He stated that he had found but one city where good electric light construction existed, and that, I believe, was Sandusky, Ohio. Even Broadway, New York city, with its iron poles will not pass inspection for first-class work. Electric light companies seem to be following in the footsteps of the early telephone companies. Almost every telephone system in the country required rebuilding within a period of six years. A well built city line will stand for at least 15 years.

I observe that at each convention some one who feels that electric light companies are much abused, will relieve himself by reading a paper upon "popular prejudice against electric light wires." While I am a stockholder in an electric light company which uses the "underwriters wire," I hope this "popular prejudice," as it is termed, will continue until there is not an inch of uninsulated electric light wire in existence. It is, or should be, the practice to adopt all reasonable means for the protection of life and property when employing an element of danger in every day business affairs. You might as well use pot metal boilers for steam engines and say it is unjust popular prejudice that condemns it.

To string an uninsulated wire for arc lighting along our streets, which are thronged with people, when it is positively known that the currents they convey will destroy the life of any person coming in contact with them, is an outrage that should not be permitted. These dangerous wires can be easily insulated, and there is no good excuse or reason for their present dangerous condition. There is not a lineman in the employ of any telegraph or telephone company in our principal cities whose life is safe for a day, and we have reached a period when it is almost impossible to get a man to make repairs to broken wires after dark if there are any electric light wires in the immediate neighborhood. An instance recently occurred in this city where the fire department cut 20 telegraph wires on a trunk route at 6 o'clock in the evening. The fire was extinguished before it did much damage, but the wires remained on the ground all night because there were electric light wires in close proximity, and the linemen would not work fearing the wires they were expected to handle would accidentally come in contact with the electric light wires. A few weeks ago a Western Union lineman was instantly killed at Detroit, Mich., while standing upon the ground reeling up a wire that was being taken down. By accident it came in contact with an electric light wire. A similar fatal accident happened to a telephone lineman in this city.

It is no wonder the insurance companies are groping around in the dark in regard to the dangers of electric lighting. It is not so much a question of how properly to wire a building to make it safe, but how to keep the electric light currents from entering the building over other wires through crosses that may occur between the electric light wires and other systems of wires that are present in every city. Buildings will never be safe from these dangerous currents until properly insulated wires are used for every part of the circuit, both out and in doors. If insurance companies will take up the subject from this point of view, they will get at the root of the danger.

I am glad Mr. Haskins was so open and frank in his condemnation of the insulation that is almost invariably used. His statements contrast nicely with those of some other Chicago gentlemen who recently testified as electric light experts. The following is a sample: "I cannot conceive of a condition where there would be any danger resulting to persons or property from contact with, or the derangement of an electric light wire, such as the 'underwriters wire.' It would not be dangerous for a person to hold in his hands an uninsulated wire conveying a current sufficient to operate 50 arc lights and have the wire cut between his hands," etc., etc. Gentlemen, don't swear too strongly in this direction. If the orthodox doctrine of a future life be the correct one, some of you will have a fearful time making crooked things straight before you pass through the gates.

Electric lighting should not be dangerous. It can be made one of the safest modes of illumination. The reason it is unsafe at present is because the plants have been so constructed as to give a maximum degree of danger and interruption. The scientific laws which should govern such construction have been largely disregarded. It would seem that the plants were constructed to sell, and if they worked a week or a month, the object of the projectors was accomplished.

The incandescent systems are also defective as a rule. The "underwriters wire" finds favor here also, and a pint of water judiciously spilled will extinguish the lights and start a conflagration. During a rain on February 1st last, at Louisville, Ky., the electric light wires came in contact with a fire alarm wire, and the result was a damage of $7,000 to the fire alarm system, and the business portion of the city left without any protection.

Since my last communication upon this subject, Mr. W. H. Brockway, superintendent of the Minneapolis company, lost his life from a shock received from an electric light wire. Notwithstanding the long list of fatal cases reported, and the losses from fires, the electric light companies still persist in stringing their uninsulated wires above, below, between, and around, every other class of wires found in cities. The situation is becoming critical in the extreme, and it behooves the committee appointed by the Philadelphia convention to act promptly.

In states where the legislatures have prohibited the use of uninsulated wire, any aggrieved corporation or individual can enjoin electric light companies from using the "underwriters" or any other imperfectly insulated wire, and this action will certainly be taken by telegraph and telephone companies if the present state of affairs continues to exist.

Very respectfully, I. N. MILLER.

CINCINNATI, Ohio, April 15, 1887.

A CORRECTION.

[68.]—An injustice was done the Mather dynamo in the "Note on the Performance of Some Dynamos" published in the ELECTRICIAN AND ELECTRICAL ENGINEER of April. The figures for volts per foot of wire on armature, volts per foot of wire and per unit periphery velocity, and volts per foot and per revolution were calculated on a basis of double the length of wire actually on the armature. Thus the results are but half their true value in this case, and the data for the Mather machine in the table should read:

Machine.	Rev. per Minute.	Velocities.	I.	II.	III.	E.M.F.	Current.
Mather	2750	3200	.520	.0098	.00020	125	40

It is but due the machine, that correction should be made.

Respectfully yours, D. C. JACKSON.

PHYSICAL LABORATORY, CORNELL UNIVERSITY, April 18th, 1887.

LITERATURE.

REVIEWS.

L'Annee Électrique, ou exposé annuel des travaux scientifiques des inventions et des principales applications de l'électricité a l'industrie et aux arts. Par Ph. Delahaye. Troisieme Année. Paris: Baudry et Cie. Janvier, 1887.

A WELL classified account of salient features in electrical progress during the year 1886 is presented in M. Delahaye's annual. It is very convenient to have thus brought together in a compact volume, notices of investigations and inventions of which the original accounts are scattered through a large number of publications in several languages. Nearly one-half the volume is devoted to electric lighting, storage batteries and electric motors; a space not too great for the rapid and striking development recently accomplished in those fields. American research and investigation is but scantily reported. This is doubtless due, in large measure, to the fact that American electricians and inventors are for the most part too busily engaged in practical work to find leisure for writing out and publishing the results of their work.

The usefulness of M. Delahaye's yearly volume would be much increased by supplying simple illustrations and diagrams in many cases.

SOME RECENT INSTRUCTION BOOKS.

Elements of Static Electricity, with a Full Description of the Holtz and Töpler Machines and their Mode of Operating. By Philip Atkinson, A. M., Ph. D. New York: W. J. Johnston. 228 pp., 12mo., illustrated.

Modern Electricity and Magnetism, Theoretically and Practically Considered. Being the Chapter on Electricity from the Elements of Natural Philosophy. By Elroy M. Avery, Ph. D. New York and Chicago: Sheldon & Company. 366 pp., 12mo., illustrated.

Short Lectures to Electrical Artizans. Being a Course of Experimental Lectures to a Practical Audience. By J. A. Fleming, M. A., D. Sc. (Lond.). London and New York: E. & F. N. Spon. 206 pp. 12mo., illustrated.

THE phenomena of static electricity occupy but little of the attention of electricians of the present day, owing to the rapid development of commercial uses for voltaic and dynamic electricity. But to scientific investigators and students of electricity

Digitized by Google

there is interest in every branch of it. Mr. Atkinson has obviously devoted much study and experiment to static electricity and has produced in small compass a volume setting forth its principal properties clearly, illustrating them by descriptions of experiments, and making many suggestive comments. As stated in the introduction "the principles of electricity are presented untrammeled, as far as possible, by mathematical formulæ, so as to meet the requirements of a large class who have not the time or opportunity to master the intricacies of formulæ." Illustrated descriptions are given of the Holtz and Töpler machines, and of Sir Wm. Thomson's electrometers. To the student and the general reader interested in scientific topics Mr. Atkinson's volume will be both profitable and pleasant reading.

Dr. Avery's excerpt from his *Elements of Natural Philosophy* is a well arranged class book for use in schools. A competent instructor with a reasonable outfit of apparatus at hand, using this manual as a text book, and following its orderly presentation of theory and illustration could easily impart to his pupils a sufficiently comprehensive knowledge of electricity for all but professional students. Perhaps the large space assigned to frictional electricity is rather disproportionate in view of the much greater practical importance of galvanic and magneto electricity in the arts of life. The modern dynamo-electric machine receives but scant treatment in the section on induced electricity, and the telephone still less; the microphone is not mentioned at all. Duplex, quadruplex and multiplex telegraphy are dismissed in a paragraph (446) of fifteen lines referring the student to technical works on telegraphy for explanations of those systems. While details of practical applications of electricity may not be strictly required in a school text book, a moderate space devoted to illustrations and explanations of methods so important as those above named would greatly enhance the usefulness and interest of the volume. The introductory chapter, giving concisely many useful definitions of terms used in general physics and of the units of the metric system, furnishes a good preparation for the student. Resort to measurement and calculation by the student is inculcated throughout the volume; each section being followed by a series of exercises or problems involving the principles set forth in the text. While Dr. Avery's book might with advantage be more inclusive, as we have suggested, it is admirable in its methods of presenting and illustrating the phenomena and principles included in its scheme.

As indicated in its title, Dr. Fleming's book is addressed to a class who already know something of electricity and magnetism. The origin of the volume is set forth by the author in the preface as follows:—"Being desirous that practical training should be supplemented by some attention to theory, Mr. R. E. B. Crompton requested me to give during the past winter some lectures on subjects connected with the principles underlying modern electrical engineering to the pupils and workmen associated with his firm, and the following pages contain the transcript of these lectures delivered at Chelmsford. Confident that the right direction for technical training is to bring home to the craftsman the scientific principles involved in daily work which passes under his hands, the subjects which most naturally claimed attention were those involved in every day experience of the audience addressed."

Following the line thus indicated the topics of the lectures are confined, for the most part, to the principles of electromagnetism and magneto or dynamic electricity. We can perhaps best give an idea of the scope of the book by quoting the headings of the first and the last of the nine lectures. Lecture I. Magnetization—Magnetic Polarity—Lines of Magnetic Force—Measurement of Magnetic fields—Magnetic Resistance—Permeability and Susceptibility—Saturation—Magnetic Theories. Lecture IX. Electro-Motors—Measurement of Work—Efficiency of Motors—Re-action Between Armature and Field Magnets—Counter-Electromotive Force—Measurement of Efficiency of Motors. The series of lectures constitute an extremely lucid exposition of the principles employed in the construction of dynamos and electric motors, together with adequate notice of secondary generators and storage batteries. Typical forms of measuring apparatus are described and explained, and one entire lecture is devoted to the C. G. S. system of units and measurement. In plan and style Dr. Fleming has happily avoided the too common error, in books addressed to classes less instructed than the authors, of consciously writing down to an assumed lower level of comprehension. He rightly addresses electrical artizans as already possessed of more than the average current knowledge of electrical phenomena, and refrains from invoking afresh the shade of Thales with his *elektron*, and from repeating the time honored elementary descriptions and experiments accessible in school books. Without resorting to mathematics beyond simple arithmetic and the most elementary algebra, the lectures convey clear, accurate and precise information upon the general theories and principles involved in the electrical engineering of the day. The volume can be commended to electrical artizans in America, and to such general readers as desire to keep informed in technical progress.

PERIODICALS.

We have received No. 2. vol. i. of the new monthly journal published by the students of Sibley College of Cornell University, under the fanciful title *The Crank*. The number in hand is chiefly devoted to a pleasant account of the recent inspection tours of the engineering classes, including that of the class in electrical engineering, of which we published the programme in our April number. The Cornell students are welcome in the field of journalism, but they must not use the phrase "in our very midst" and expect to escape the vigilant eye of that stern critic of English grammar, the New York *Sun*.

CATALOGUES AND PAMPHLETS RECEIVED.

The Standard Underground Cable Company issue a new circular for 1887, describing and illustrating a large variety of electric cables, covering about all uses for which insulated and protected conductors are required. The Waring Cables, made by this company, have come into extensive use during the past few years, and the circular contains many notices, commendatory of their qualities, from electricians and others who have had experience with them.

The Safety Electric Railway and Power Co. (Daft System) issue a handsome new circular which has reached our hands. In addition to illustrated description of Electric Dynamos and Motors for a variety of uses, the pamphlet contains much matter of interest on Electric Railway, including a very full description of the Baltimore and Hampden Electric Railways, which was put in operation September 1st, 1885. A map of the route of this road is given.

We have received the illustrated catalogue and price list of Messrs. E. E. Garvin & Co., manufacturers of machinery and machinists tools. The descriptions and illustrations exhibit a wide variety of machines and appliances adapted to many branches of manufacture. The Messrs. Garvin are well known to purchasers of machinery and tools.

We have received from Messrs. W. R. Ostrander & Co., a copy of the fifth edition of their catalogue of Speaking Tube Apparatus, Electric Bells and Annunciators, comprising a large and very complete list of pneumatic and electric household appliances. Electric Gas Lighting devices are included in their lists. The Catalogue is well and profusely illustrated.

ELECTRICAL NEWS AND NOTES.

OBITUARY.

George H. Grace.

MR. GEORGE H. GRACE died at his home, Easton, Pa., April 13th, after a long and courageous struggle against disease involving great suffering. He never lost heart. No one who was privileged to see him in his sick chamber during the past year will be likely to forget his serenity and courage. Though prostrate and in bed, he continued to look after his business—the charge of the telegraph lines of the New Jersey Central Railroad system—receiving visits at the bedside from his clerks, hearing their reports, and giving them instructions.

Mr. Grace had been a telegrapher from boyhood, having commenced his service as a messenger in the New York office of the House Telegraph Co. in 1851. He advanced rapidly, and in 1857 became manager of the Petersburg, Va., office of the Morris Southern lines. After service with the American Telegraph Company, beginning in 1860, he became in 1866 superintendent of the Insulated Lines Telegraph Company, afterwards called the Franklin, working a number of wires from Boston to Washington. Subsequently he was made superintendent, successively, of the Bankers and Brokers, the National and the Automatic Telegraph Companies. In July, 1874, Mr. Grace accepted the position of General Superintendent of the Southern & Atlantic Telegraph Company. He found a congenial task in pushing forward the work of this company which, with connections north and east of Washington over the lines of the Franklin and Atlantic and Pacific companies, was developing a vigorous opposition to the Western Union company. Mr. Grace was instrumental in a successful negotiation for his company of a connection with the Western Union for business north of Washington in April 1874; an arrangement which culminated in the leasing of the Southern and Atlantic lines to the Western Union company in 1876.

It will be noted that during a considerable period Mr. Grace was engaged in enterprises competing with the Western Union Telegraph Company. His energetic character well fitted him for such work. After the virtual absorption of the Southern and Atlantic in the Western Union company Mr. Grace entered the service of the latter, in which he continued till his death.

Mr. Grace's personality made a strong impression upon all who came in contact with him. He combined much force with great activity, was positive in his views and vigorous in whatever he undertook. By his warm heart and genial companionableness he made a host of friends who will be saddened by his death, and keep his memory green in pleasant reminiscence.

ANNUAL REPORT OF THE AMERICAN BELL TELEPHONE CO.

OFFICE OF THE AMERICAN BELL TELEPHONE CO.,
BOSTON, March 29, 1887.

To the Stockholders:

Our business for the year ending December 31, 1886, was marked by an improvement over the previous year, especially in

Digitized by Google

exchange subscribers,—the total number showing an increase of 9,818 as against 2,969 in 1885.

The following comparative statistics will be found of interest:—

EXCHANGES.

	1883.	1884.	1885.	1886.	1887.	Decrease from 1886.	Increase over 1886.
Exchanges	725	906	722	747	736	11	
Branch offices	345	419	481	422	446		18
Miles of wire on poles			88,481	100,332	111,349		11,017
Miles of wire on buildings			11,886	10,043	10,587		544
Miles of wire underground			1,225	3,417	6,030		2,613
Miles of wire submarine				254	265		11
Total miles of wire	68,571	85,896	101,592	114,046	128,231		14,185
Total circuits	74,484	97,422	107,440	112,067	121,260		9,193
Total employés	3,716	4,762	5,168	5,438	5,843		405
Total subscribers	97,728	123,625	134,847	137,750	147,068		9,318

EXTRA-TERRITORIAL LINES.

	Jan. 1, 1883.	Jan. 1, 1884.	Jan. 1, 1885.	Jan. 1, 1886.	Jan. 1, 1887.	Increase during 1886.
Number of lines	247	598	826	897	911	14
Miles of pole lines	6,154	20,592	25,766	30,697	31,143	446
Miles of wire	13,653	29,359	35,631	41,745	43,767	2,022

UNDERGROUND WIRES.

	Jan. 1, 1886. Miles.	Jan. 1, 1887. Miles.	Increase over 1886. Miles.
Albany		1	1
Boston	289	347	58
Brooklyn	134	1,233	1,099
Chicago	760	1,462	702
Detroit		82	82
Louisville		9	6
Milwaukee	1	1	
New York	627	627	
Pittsburgh	614	966	352
Washington	992	1,302	310
	3,417	6,030	2,613

INSTRUMENTS.

	Dec. 20, 1882.	Dec. 20, 1883.	Dec. 20, 1884.	Dec. 20, 1885.	Dec. 20, 1886.	Increase during the year.
In the hands of licensees under rental	237,728	298,580	325,574	330,040	358,518	23,478

EXCHANGE CONNECTIONS.

The estimated average number of exchange connections daily in the United States is	856,454
Or a total per year of	312,605,710
The number of daily calls per subscriber varies in different exchanges from 2 to 15, the average throughout the United States being	5 82-100
As compared with	5 43-100

the number reported last year, an increase of 7 per cent.

The average cost to the subscriber varies, according to the size of the exchange, and character of the service, from 2 to 7 cents per connection.

EXTRA-TERRITORIAL BUSINESS.

The average daily number of extra-territorial connections is	7,402
Or a total per year of	2,701,730
The extra-territorial earnings for the year amounted to	$565,514 85
Of which this company's share is	$75,617 30
An increase over 1885 of	$2,208 02

In the case of six companies which have not reported for the entire twelve months, the statement has been completed from the average for the months reported.

It will be noted that the number of miles of wire underground has materially increased, and we expect further large additions to the underground mileage in the current year, especially in New York, where the subway commission has made arrangements for the working of an underground system, which will meet the requirements of the wire companies.

The legality of the plan adopted by them has been questioned in the courts, and further legislation may be needed before the work can be completed; but as there is a strong public desire for the burying of wires to the greatest practicable extent, the necessary legislation will probably be obtained and the work go forward. This will involve a heavy outlay by the Metropolitan Telephone and Telegraph Co., and the subject has been under careful consideration by the directors of that company and by our Mr. Davis; and they are prepared to put a large part of their wires into subway conduits as soon as the obstacles referred to are removed.

Following the policy outlined in the last report in respect to licensed companies operating in territory of little value where it was found difficult to build up a profitable business, we have modified our contract relations with several of such companies, and have negotiations in progress with several more, which will, in our judgment, place these companies upon a sound footing, will promote friendly relations, and will serve to encourage the proper development of the business.

The concessions made involve yielding a certain share of the profits immediately accruing to these companies, but will, we believe, in the long run prove of mutual advantage to ourselves and the companies interested.

Terminal facilities have finally been secured, within a few months, in Philadelphia, for the long line service, and arrangements completed for giving facilities for conversation to New York and other important points. Several private lines are already under contract between Philadelphia and New York, and we shall this year be able to go far in ascertaining the value of this class of business.

The delay in getting facilities granted in Philadelphia has prevented us from determining this question in a practical manner; but we consider it of sufficient importance to connect Boston with New York to warrant building that line without waiting for the commercial result in the Philadelphia and New York line, and are taking steps to complete it during the present year.

The treasurer's statement shows—

Gross earnings for the year from all sources		$3,097,000 91
Expenses		1,149,717 79
Net earnings		$1,947,283 12
Miscellaneous credits		26,067 64
Total		$1,973,350 76
Regular dividends paid	$1,176,252 00	
Extra dividends paid	392,084 00	
Total	$1,568,336 00	
Reserve for depreciation of instruments	117,754 59	
		1,686,090 59
Balance to surplus account		$287,260 17
Total surplus		$1,491,380 18

The Canadian company continues to do extremely well; it has increased its subscribers during the year from 9,614 to 11,600, and its net earnings from $158,000 to $190,565.83, and although the Blake transmitter patent, as well as the Bell patents, has been declared void, the business of the company seems to be on a most healthy and prosperous footing.

* * * * *

The operation of the Indiana law regulating rates has proved to be as mischievous to the public as was predicted. It, of course, at once stopped absolutely any extension of business, and checked that steady improvement which is constantly going on towards greater efficiency and convenience to the public in the conduct of the business. The service was so crippled that strong popular feeling showed itself, urging the repeal of the law. The bill for its repeal passed the house by a very large majority, and went to its third reading in the senate, when the political complications arising out of the questions relating to the lieutenant-governorship arrested all business during the remainder of the term of the session.

Bills for the regulation of telephone rates have during the past winter been introduced into a number of the state legislatures. In these cases where final action has been had, the measures have been rejected, and a disposition seems to be generally felt against imposing restrictions which it is not customary to place upon other branches of business.

At the present time, when it is becoming necessary for all the large telephone companies to incur heavy outlays for underground wire work, it certainly seems that they should be relieved from the danger of having measures adopted which would prevent all profitable development of the business.

Our company and our licensees are proposing to make large outlays to give increased facilities for telephone connection, which there would be no temptation to provide if there were much probability that the states could and would place restrictions upon prices for that which we shall have to sell.

By act of 1886, chapter 270, a modification was made in the law under which this company is taxed in Massachusetts, the result of which has been to increase our tax very considerably; that laid on the 1st of May, 1886, amounts to $74,846.98.

The patent division continues its work of digesting American and British patents relating to electrical subjects, including not only inventions claimed, but inventions described in specifications unclaimed.

It has also prepared during the year and reported on a large number of subjects submitted by the officers of the company.

Digitized by Google

The electrical division has been much occupied in experimental work, at the instance of counsel engaged in our various litigations.

It has also begun and made considerable progress in an extended series of experiments on pole lines and on mixed cables and pole lines for calculating the dimensions of pole wires and cables forming the alternate links in any chain of telephonic communication.

The mechanical department has given much time to studying long-distance transmitters, and to the general question of transmitters of the granular carbon type.

It has also devised a suitable form of instrument for use in mines, and a form for the use of divers.

* * * * *

The business of 1887 has opened well, and the directors look with confidence for a prosperous year.

For the directors,

W. H. FORBES, *President.*

LEDGER BALANCES, DEC. 31, 1886.

DEBTORS.

Telephones	$597,749 84	
Stocks	22,605,925 08	
Merchandise and machinery	14,159 71	
Bills and accounts receivable	1,007,872 75	
Cash and deposits	683,626 55	

CREDITORS.

Capital stock		$9,802,100 00
Bills and accounts payable*		638,344 67
Patent account (profit and loss)		9,373,836 07
Profit and Loss		3,352,445 72
Reserves		251,227 24
Surplus		1,491,380 18
	$24,909,333 88	$24,909,333 88

*Of this amount $294,063 is the dividend payable Jan. 15, 1887, to stockholders of record Dec. 31, 1886.

WM. R. DRIVER, *Treasurer.*

BOSTON, March 29, 1887.

COMPARATIVE STATEMENT OF EARNINGS AND EXPENSES.

EARNINGS.

	1885.	1886.
Rental of telephones	$2,026,398 33	$2,109,492 44
Sales of instruments and supplies	2,676 18	2,200 96
Dividends	597,469 99	844,555 76
Extra-territorial and branch lines	75,878 96	78,109 81
Telegraph commission	15,388 05	16,681 22
Interest	39,812 79	34,560 77
Miscellaneous	8,260 63	11,399 25
	$2,765,884 93	$3,097,000 91

EXPENSES.

Expenses of operation	$220,726 25	$230,968 05
Legal expenses	210,614 32	210,550 20
Interest and taxes	33,377 42	82,458 25
Commission	396,650 72	404,111 30
Royalty	12,523 74	14,501 36
Rental concessions	*98,796 00	†207,128 63
	$972,688 45	$1,149,717 79
Net earnings	$1,793,196 48	$1,947,283 12
Misc. items to surplus account	16,800 00	26,067 64
	$1,809,996 48	$1,973,350 76
Surplus account, Dec. 31, 1885	$1,204,120 01	
Net earnings, 1886	1,947,283 12	
Miscellaneous items	26,067 64	$3,177,470 77
Regular dividends in 1886	$1,176,252 00	
Extra dividends in 1886	392,084 00	
Reserve for depreciation of instruments	117,754 59	1,686,090 59
Surplus account, Dec. 31, 1886		$1,491,380 18

*Six months.
†Twelve months.

A RED-HOT TELEPHONE TRANSMITTER.

Professor G. Forbes and Mr. John Munro, have recently made some experiments with a red-hot wire as a telephone transmitter, an account of which has been communicated to the Royal Society. A fine platinum wire, from .001 to .005 inch in diameter, and several inches long, was included in the circuit of a charged accumulator, and the primary wire of an induction coil. A receiving telephone was connected in circuit with the secondary wire of the induction coil. The battery power was such that the fine wire in the primary circuit was heated to a high temperature and rendered incandescent. When in this condition, on speaking to it the words could be heard in the receiving telephone. The explanation of the phenomenon is, that the sound waves passing the incandescent wire in quick succession altered its resistance by cooling, and thus varied the strength of current in the primary circuit. The fluctuations of current thus caused excited corresponding fluctuations in the secondary circuit, and these reproduced the voice in the receiver. Spiral wires in the form of watch springs, of steel and platinum iridium, were tried in place of the straight wire with some success. An india-rubber diaphragm was also interposed between the voice and the heated wire, and found to influence the wire like the direct voice. Mechanical vibration did not affect the apparatus.

ELECTRICAL FESTIVITIES.

DINNER OF THE ELECTRIC CLUB.

THE anniversary dinner of the Electric Club was held at the Hotel Dam (Union Square) Thursday evening, April 21st. About 100 members and friends sat down to meat at half-past seven o'clock and did not rise till midnight. The dinner was of the best, and fully deserved the two hours and a half occupied in its enjoyment. General sociability promoted the leisurely disposition of choice viands and cheering cups till ten o'clock, when Mr. C. E. Dutton, toast master, rapped the table, and with much humor and felicity announced "Our Club." The toast was responded to by Mr. C. L. Buckingham, in a vein of quiet and veiled humor greatly enjoyed by the attentive listeners. Having been warned to confine himself to the past, or at least, not to trench upon the future, he drew from the adventures of Gulliver many significant allusions to the affairs of the club and its members. Dr. Otto A. Moses, replied to the next toast "Our Future." His remarks were happily in keeping with the spirit of the occasion; he predicted a bright future for the club—but not too bright in view of the growth of its membership from 13 to 220 during its first year. "Electrical Nomenclature" brought to his feet Mr. W. S. Hine, who responded in verse. His chaotic humor and felicitous rhyming kept the room in a roar of laughter during the entire reading—Our "good gray poet" will have to look to his laurels as the champion in catalogues in verse. Mr. C. J. H. Woodbury, of Boston, was called for "The Barbarians of the Outside World." From the point of view of one inside the world of electricity, Mr. Woodbury recited a number of unfortunate experiences met with by outsiders in meddling with electric and other matters which they did not understand. Along with his jokes and anecdotes Mr. Woodbury presented much solid and valuable suggestion in his references to the growth of electrical arts, particularly to the results accomplished in this country by the joint efforts of scientific men and artizans of skill and common sense. Mr. H. J. W. Dam was permitted to make a "Gentle Protest from the Barbarians," which he did effectively. After a shower of witticisms he proffered a pathetic appeal to electricians to wipe out their jargon, and to use terms current in common English.

Among the guests of the club were Mr. Marshall P. Wilder and Mr. Edward Fabian. At various stages of the evening Mr. Wilder convulsed the company with anecdotes recited as only he can do it. Mr. Fabian contributed a number of remarkably effective recitations. Lieut. F. W. Toppan and Mr. G. M. Phelps, Jr., of the club, furnished one a song and the other a pianoforte piece

The evening will be pleasantly remembered by all who were fortunate enough to be present. Many old friends met, and many new and pleasant acquaintanceships were acquired.

Preceding the dinner the annual election of the club was held, resulting as below:—

President—H. C. Davis; Vice-Presidents—Geo. W. Hebard, John B. Powell, Thomas A. Edison, Geo. L. Beetle; Secretary—Charles W. Price; Treasurer, Andrew J. Dam; Board of Managers—Henry D. Stanley, M. W. Goodyear, E. T. Gilliland, Willard L. Candee, Chas. Dutton, Cyrus O. Baker, Jr., H. B. Thayer, E. T. Lynch, Jr., Thomas L. Fowler, Stephen D. Field, Henry A. Reed, Fred. A. Gilbert, Geo. B. Coggeshall. Committee on Membership—Henry Hine, Geo. Worthington, Geo. T. Manson, Henry D. Lyman, Jackson Bailey.

ENGLISH ELECTRICIANS ENJOY THEMSELVES.

The following notice is from the *Electrical Review* (London):

"*The Electro-Harmonic Society.*—The first smoking concert of this newly formed society took place on the evening of Friday last in the banquet room of St. James's hall restaurant, Mr. C. E. Spagnoletti, presiding. As many of our readers are aware, the society has been promoted with the object of occasionally bringing together the electrical fraternity and their friends for the purpose of enjoying social intercourse, unencumbered by the trammels of business, and to listen to good music, which hath charms to soothe the savage breast (not an unusual possession in these days of keen competition), discoursed by exponents of proved ability; and, if a correct judgment can be pronounced from the impressions gathered on the opening night, we think that a long-felt want has been supplied. A capital programme had been provided by the musical directors, and the Electro-Harmonic Society listened with evident pleasure to several songs and glees, performed in an admirable manner by Messrs. Dalzell, Kift, Bevan and Brown. Mr. Wilhelm Ganz, whose name alone went far towards ensuring success, most kindly placed his valuable services at the disposal of the society, and played the "Sonata Pathétique" of Beethoven, in addition to some lighter selections. During the interval, Mr. Spagnoletti, who has been untiring in his efforts in support of the society, explained briefly the objects which had brought the members together, and shortly before 10.30 the concert came to a close, amidst general expressions of satisfaction from the assembly."

Digitized by Google

TELEGRAPH STATISTICS.

The new issue of "The Statesman's Year Book" (Macmillan), gives the following statistics relating to the telegraphs of the world:

States.	English miles.	States.	English miles.
Belgium	5,711	Austria-Hungary	35,086
France	61,286	Servia	1,736
Switzerland	4,449	Portugal	3,111
Great Britain and Ireland	30,276	Roumania	3,199
Germany	51,869	Bulgaria	1,521
Netherlands	2,938	Spain	11,158
Turkey	14,618	Norway	4,591
Denmark	2,447	Russia (and Finland)	68,611
Greece	4,054	Sweden	5,361
Italy	16,359		
Total for Europe			328,281
Cochin China	1,444	Dutch East Indies	3,592
Ceylon	1,158	Persia	3,209
Japan	5,583	Tonking	159
British India	25,380	Straits Settlements	121
Philippines	718	China	944
Asia, total for the above countries			42,308
Salvador	1,260	Uruguay	1,032
Cuba	2,811	Canada	20,466
United States	164,954	Columbia	2,357
Guatemala	1,816	Peru	1,382
Honduras	1,349	Venezuela	1,145
Nicaragua	1,306	British Guiana	264
Mexico	19,430	Brazil	6,432
Chili	7,625	Ecuador	400
Argentine Republic	12,479	Paraguay	45
Costa Rica	450	Bolivia	180
America, total for the above countries			247,183
Reunion	76	Egypt	5,858
Tunis	1,874	Orange Free State	560
Algeria	3,661	Transvaal	120
Cape Colony	4,244	Mozambique	53
Senegambia	1,535	Angola	219
Africa, total for above countries			18,220
Tasmania	1,635	Australia	30,000
New Zealand	4,463		
Total for Australia			36,098

THE GOVERNMENT TELEPHONE SUIT.

The filing of the American Bell Telephone Co.'s demurrer is reported in a despatch to the *N. Y. Evening Post*, of April 25th, as follows:

The demurrer of the defendant in the great suit of the United States against the American Bell Telephone Co. was filed in the United States Circuit Court this forenoon. It assigns as the grounds of the demurrer in substance the following: 1. The bill is multifarious, in that it conjoins allegations and prayers for relief in respect to patent No. 174,465, dated March 7, 1876, and allegations and prayers for relief in respect of patent No. 186,787, dated January 30, 1877. 2. The bill does not point out and specify which of the persons patents and publications referred to in its schedules anticipate each of the inventions claimed in the said two patents respectively nor in the several claims of each, it appearing by said schedule that some of the patents and publications therein referred to are subsequent in date to both the said patents to Bell.

To so much of the bills as refers to patent No. 174,465, dated March 7, 1876, the defendant demurs for the following cause: 1. The plaintiff does not show any power or authority, and no power or authority in law exists in any person or party, or any court, to bring said suit, nor to entertain the same, nor to give the relief therein prayed, nor any relief thereunder, or touching the subject-matter thereof. 2. The plaintiff has not made or stated a case which calls upon or justifies this court in the exercise of this discretion to permit this bill to be entertained. 3. Nor a case which entitles it in a court of equity to the relief prayed for. 4. Nor, as against this defendant the American Bell Telephone Co., to the relief prayed for or any relief whatever. 5. The case stated in and by the bill is one which, as against this defendant, the assignee of said Bell patents, should have been prosecuted (if at all) with the utmost diligence; whereas, as against this defendant, it is a stale claim, contrary to equity and good conscience, and one which, by reason of the gross laches, and delay in presenting it, a court of equity ought not to entertain.

The demurrer to the part of the bill which refers to patent No. 186,787, dated January 30, 1887, assigned the same causes for demurrer as are assigned in the demurrer to the patent numbered 174,465. The defendant then demurs to each and every charge in the bill on the ground that it does not show the patent to be void, and because the allegations therein contained, if true, would not entitle the plaintiff to the relief prayed for, nor to any relief in a court of equity, because the bill does not set forth any fraud in procuring said patent, nor specifically set forth what acts, if any, the complainant relies on as constituting fraud in procuring said patents, or when, how, from whom, or by what means the complainant first had knowledge or notice of each alleged fact; nor why, with due diligence, it would not have learned them earlier. There is also a prayer that the demurrer may be taken as a separate demurrer on each of said grounds to each allegation as if repeated in a separate form to each.

The argument on this demurrer will be set down for the first Monday in May, but at that time there will be no hearing, but probably a date for argument will be then fixed upon unless an agreement as to the time is made otherwise between counsel.

THE BALTIMORE AND OHIO TELEGRAPH CO. IN ITS NEW QUARTERS.

The main office and operating room of the Baltimore and Ohio Telegraph Co. are now removed from No. 63 Broadway to the building at Broadway and Canal street, formerly known as the Brandreth House. The operating room occupies the entire top floor, and the floor immediately below it is mostly taken up by the battery rooms. In the operating room are 310 desks, with single, duplex and quadruplex instruments.

The main switch-board is composed of five sections, into each of which enter 50 wires, connecting with various parts of the country. Besides this, there is another switch-board for connecting wires with important receiving and distributing points like the Produce and Stock exchanges. A novel feature of the room is a distributing railway system by means of which messages are sent to and fro between the clerical department and all parts of the room in a few seconds. It consists of little carrier-clips traveling over wires suspended overhead. It is constructed on the same principle as the cash railways in the large dry goods stores, except that the wires are strung on the level instead of an incline, and the carriers are shot to and fro by an ingenious combination of steel and rubber springs.

GERMAN PROGRESS IN ELECTRIC LIGHTING.

Kuhlow's German Trade Review enters a strong plea for German progress in electric lighting. A few years ago, England and France, after the United States, says our contemporary, excelled all other countries as far as the application of the electric light was concerned. What a change the last few years has brought is evident from the fact that Germany with 250,000 incandescent lamps is now in front of both these countries, and running a close race with even the United States. The progress we are making is decidedly rapid. Town after town is being equipped with central stations, while numbers of others are proposing to introduce the light on more or less extensive scales. Such towns as Hanover, Lübeck, Hamburg, and Breslau have arranged for extensive installations, while Dresden is only awaiting the result of the application of the Zipernowsky transformer system in Hanover before embarking on a similar enterprise. In Berlin the Stadtische Co. will shortly erect two new stations calculated to supply 15,000 lamps, besides further extending the existing ones. Hitherto the Edison lamp has always been in use, but in the new installations the Khotinsky lamp will be given a trial. It is said to be more durable and require less current than those of other systems, and on that account has found great acceptance on board our war vessels for both lighting and signaling purposes.—*The Engineer* (Glasgow).

PERSONAL MENTION.

We are gratified to receive with our copy of the *Electrician* (London) of April 8th, an excellent engraved portrait of Mr. William H. Preece, Electrician of the British Postal Telegraphs. Mr. Preece is well known to American electricians, through his distinguished services in improving telegraphic methods in Great Britain, as well as through his numerous contributions to the literature of electrical investigation and practice. Many of our readers will recall his genial presence on his visits to America some years ago. He left here many friends who would be glad to welcome him again.

Another instance of the not infrequent withdrawals from the service of the patent office of able and experienced men to engage in more remunerative pursuits, is to be noted in the resignation of Mr. C. J. Kintner, sometime principal examiner in electricity. Mr. Kintner has become associated in partnership with Mr. J. A. Wiedersheim, of Philadelphia, under the firm name of Wiedersheim & Kintner, solicitors of patents. Mr. Wiedersheim opened his office in Philadelphia 20 years ago. His increasing business requires further expert service, and to that end, he has secured the co-operation of Mr. Kintner, whose admirable qualifications are widely known; particularly in respect to electrical inventions. Mr. Kintner may justly value highly the commendation of his "learning, intelligence and skill," expressed by the Commissioner of Patents and the Secretary of the Interior in accepting his resignation.

RAILLERY.

Railroad president to the general attorney for the road—"Mr Blackstone, please tell us in your honest opinion of the interstate commerce bill—does the law prohibit our giving any passes to newspaper men?"

General counsel—"Do you want to continue the passes?"

President—"No, I don't."

Counsel—"Well, then, the law plainly enough prohibits issuing such passes."—[*Exchange.*]

Digitized by Google

ELECTRIC LIGHT AND POWER.

The Girard Trust, of Philadelphia, has determined to light the Girard College grounds and vicinity by means of seven electric light towers, each to be 125 ft. high and to be supplied with five or six lamps. Bids for the erection of the towers were opened, and the contract awarded to the Fort Wayne Jenny Electric Co., at $10,750. The other bidders were: Brush Electric Co., $10,936.55. U. S. Electric Light Co., $14,440, and the Thomson-Houston Electric Light Co., $13,291.50.

The Pawtucket Gas Light Co., Pawtucket, R. I., has decided upon the introduction of the electric light, and will put in a plant at once.

The American Electrical Manufacturing Co., New York city, will remove its offices, about May 1st, to the new building of the Metropolitan Telephone and Telegraph Co., on Cortlandt street. The American company has secured the entire second floor of this building, which will afford it abundant facilities for proper display of its specialties, and also allow sufficient room for its executive offices.

The introduction of the electric light is not always, apparently, an unmixed benefit. Some time ago electric lights were placed in front of the treasury and other public buildings in Washington, and a fine and striking effect is said to have been produced. Unfortunately, however, spiders discovered that game is plentiful in the vicinity of the new lights, and that they may there ply their craft successfully both day and night. In consequence, as Mr. G. Thompson writes to *Science*, their webs are so thick and numerous that portions of the architectural ornamentation are no longer visible, and when the webs are torn down by the wind, or fall from decay, the refuse gives a dingy and dirty appearance to everything it comes in contact with.

The St. Paul Gas Light Co., St. Paul, Minn., reports its electric lighting business as flourishing.

The Empire Electric Light Co., of Atlanta, Ga., will put in a plant.

The ownership of the Fuller-Wood electrical patents has passed entirely into the hands of the American Electric Manufacturing Co.

The Schuyler Electric Light Co., of Hartford, Conn., has reorganized and has a new charter. Charles E. Dustin is president, and C. H. Sewall, secretary.

The Heisler Electric Light Works, St. Louis, have erected a new two-story brick building immediately in front of their present offices, on South 7th street, and will use it for office and shop purposes. The company are quite busy throughout their extensive establishment.

The Wellsboro Heat and Power Company will establish an electric plant at Wellsboro, Pa., the coming summer. Anton Hardt and S. Harrison, are interested.

The United States Electric Lighting Company, Washington, D. C., is erecting an electric plant.

William Carroll, Matteawan, N. Y., contemplates establishing an electric light plant in Fishkill Landing, N. Y.

The Parkersburg Electric Light and Power Co., Parkersburg, W. Va., has contracted for the Westinghouse system, and will be in operation shortly.

The Hempstead Gas Light Co., Hempstead, L. I., will adopt an electric lighting system.

There are estimated to be 4,000 arc and 20,000 incandescent electric lamps in service in the city of Philadelphia.

The Electric Improvement Co., of California, has been incorporated in San Francisco, for the purpose of buying and selling inventions for electric motors and illuminants, and the manufacture of apparatus. Capital stock, $5,000,000 in $10 shares. Directors; F. W. Sharon, J. B. Randol, L. T. Haggin, A. J. Bowie, Jr., H. C. Dwyer, W. H. Howard, and Frank Butterworth.

The Edison plant at Brockton, Mass., is to be enlarged to nearly double its present capacity.

Port Jervis, N. Y., will be lighted by electricity. J. H. Dimmich is interested.

Carter, Shepherd & Co., Hannibal, Mo., contemplate establishing an electric plant for their mill.

The U. S. Electric Lighting Co., of Washington, D. C., is erecting its plant.

The Birmingham (Conn.), Electric Light Works were overrun with rats until the superintendent had a happy thought. To wires attached to dynamos he fastened bits of meat and scattered them about. The rats smelled the meat, nibbled, and—good by rats.

Foreign.

Austria.—Statistics recently published on the telegraphic communication throughout the empire, show that during the past year a total of 6,351,363 telegrams were transmitted, of which number 1,920,000 were local messages in the Vienna district. The total receipts amounted to 3,564,119 florins, representing, at the present rate of exchange, about $1,358,000. It is curious to note the large number of international messages as compared with those sent inland. Out of the total of over 6,000,000, 1,347,374 were telegrams transmitted from or to places abroad.

France.—At a recent meeting of the Paris town council two members suggested that the council should establish a municipal service of electric lighting throughout the whole of Paris, and they have asked for the appointment of a special committee, composed of members of the town council and professional engineers and electricians, for the purpose of reporting on the best method of carrying out this idea. The new police regulations regarding the installation of electric lighting in theatres and other public places, are viewed with great dissatisfaction by local electricians. They are extremely strict, and will tend to increase the cost and retard the progress of installation work. For instance, all lamps must be surrounded by wire netting (glow lamps not excepted), samples of all the conductors must be submitted, the plans of these installations have to be submitted to the prefect of police in triplicate, and the work must not be begun until permission has been given.

India.—Experiments are shortly to be made with a view to the introduction of the electric light into the railway carriages in India. Owing to the long distances to be traversed in India, night journeys are a necessity; in fact, by reason of the comparative coolness of the night traveling, many people prefer trains which run after dark.

Spain.—An enterprise contemplating the electric transmission of power on a very large scale is on foot in Spain. The undertaking is to utilize the water power of the river Turia to the extent of about 3,000 h. p. at a point, Chulilla, 35 miles from Valencia, and to deliver in that city about 1,500 h. p. for the use of manufacturers in the daytime and for electric lighting at night. From a notice in the *Electrician*, London, it appears that the Spanish promoters have prepared estimates of the outlay required, as well as of the revenues and expenses of the business. The estimated figures are substantially as follows:

Capital expenditure	$907,500	
Revenue from supply of power		$206,610
" " light		138,710
Gross revenue		$345,320
Expense of operation, including depreciation		87,300
Net revenue		$258,020

Or nearly 30 per cent. on capital outlay.

The promoters are said to be open to receive suggestions and plans for the electrical plant, as no particular system has yet been adopted.

NEW INCORPORATIONS.

The Fernwood Electric Light and Power Company, Fernwood, Ill. Capital stock, $15,000. Louis P. Scoville, and others, incorporators.

An electric light company has organized to establish a plant at Hanover, Pa. Estimated outlay, $16,000. Address F. A. Ziegler.

The Columbus Edison Electric Illuminating Company, Columbus, Ohio. Capital stock, $100,000. William C. Turner, and others, incorporators.

The Johnstown Electric Light and Power Company, Johnstown, N. Y. Capital stock, $20,000. Jacob P. Miller, and others, incorporators.

The Brush Electric Light and Power Company, Waverly, N. Y. Capital stock, $20,000. James A. Clark, and others, incorporators.

The Edison Electric Light and Power Company, Minneapolis, Minn. Capital stock, $4,000,000. A. F. Rockwell, and others, incorporators.

The Brooklyn Electric Light and Power Company, Brooklyn, N. Y. Capital stock, $100,000. Noah L. Cochen, and others, incorporators.

The Columbus Edison Electric Illuminating Co., of Columbus, O., with a capital of $100,000. Messrs. W. C. Turner, Wm. S. Ide, J. H. Collins, and others, are incorporators.

The Thomson-Houston Electric Light and Power Co., of Newton, Ia. Capital, $25,000, and the following officers: President, H. M. Vaughn; secretary and treasurer, C. H. Wilder.

The Peekskill Electric Light and Power Co. of Cortlandt, N. Y. Capital stock, $30,000. Messrs. Geo. V. Frost and Thos. D. Husted, of Peekskill, are the local parties interested.

Messrs. J. P. Miller, Chas. O. and Jas. H. Cross, A. J. Nellis, Jno. G. Ferris, and others, have organized the Johnstown Electric Light and Power Co., of Johnstown, N. Y., with an initial capital of $20,000

The Edison Light and Power Co., of La Crosse, Wis., has a capital stock of $150,000. Among those interested are G. Van Steenwyke, W. H. Holcomb and S. Y. Hyde.

The Dodge City Electric Light and Heating Co., Dodge City, Kan., has been incorporated by F. Gardner, and others, with a capital stock of $50,000.

Messrs. J. Monroe Shellenberger, Henry Lear, Alf. Pashall and others, are organizing the Doylestown Electric Light Co., at Doylestown.

The Edison Electric Illuminating Co., of Brooklyn, N. Y., has been incorporated, with a capital of $500,000. Messrs. Eugene

Digitized by Google

and Chas. E. Crowell, Wm. D. Sargent, Spenser Trask, and others, are incorporators.

The Pratt City Electric Light Co., of Pratt, Kan., has been incorporated, with a capital of $25,000.

The Hallowell Light and Power Co., Hallowell, Me., has been incorporated with a capital of $50,000. Emory A. Sanborn is president.

The Newburyport Electric Light and Power Co., of Newburyport, Mass., capital, $15,000. Messrs. Wm. E. Chase, W. A. Stiles, Wm. R. Johnson, and others, are incorporators.

The Brooklyn Electric Light and Power Co., of Brooklyn, N. Y. Capital stock, $100,000. Messrs. R. G. Phelps, Noah L. Cochen, Wm. H. Palmer, Jas. H. Hurst, and others, are incorporators.

The Idaho Electric Supply Co., of Hailey, Idaho, has been incorporated, and the following officers elected: President, Texas Angel; secretary and treasurer, S. C. John. Capital stock, $20,000.

The Georgetown Electric Co., Georgetown, Cal. Capital stock, $7,500. James E. Tucker, and others, incorporators.

The Peekskill Electric Light and Power Co., Cortlandt, N. Y. Capital stock, $30,000. George B. V. Furst, and others, incorporators.

The Mexico Electric Light and Power Co., Mexico, Mo. Capital stock, $10,000. J. F. Llewellyn, and others, incorporators.

The Capital Electric Light, Motor, and Gas Co., Boise City, Idaho Ter. Capital stock, $10,000. Wm. H. Nye, and others, incorporators.

The Standard Electric Co., New York city. Capital stock, $500,000. Frank Tach, and others, incorporators.

The Ticonderoga Electric Light and Power Co., Ticonderoga, N. Y. Capital stock, $16,000. George S. Clark, and others, incorporators.

The Gogebic Electric Light Co., Aurora, Ill. Capital stock, $30,000. John H. Pease, and others, incorporators.

The North New York Lighting Co., of New York city. Capital, $150,000. The corporators include Jordan L. Mott, Jr., Thos. N. Motley, Herman Clark, M. H. Cardoza, and others.

The Brush Electric Light and Power Co., of Waverly, N. Y. Capital, $20,000. Mr. James A. Clark can give all particulars.

MANUFACTURING AND TRADE NOTES.

The New York office of the American Electrical Works of Providence, R. I., has been removed to the new telephone building, 16 Cortlandt street, where Mr. Harry Hall, the New York agent, will henceforth be found.

The New York, Lake Erie and Western Railway has, within the last month, made a contract with the Union Switch and Signal Company, of Pittsburg, for a system of block signals and interlocking switches, with the Sykes attachment, which is to be completed by the middle of June at a cost of $60,000. The portion of the road to receive this attention is that on which there is an immense suburban travel, extending as far west as Turners, 49 miles from New York. The necessary equipment to fulfill the Erie contract will consist of 27 towers or signal stations situated at different points between New York and Turners, and at the following points, 10 in all, there will be a complete system of interlocking switches: East and west ends of the Bergen tunnel, Seamens, Hackensack drawbridge, New Jersey and New York Junction, Rutherford Junction, Ridgewood Junction, Sterling Junction and Southfield. Work will begin immediately, and it will require 200 men for this purpose.

High rents and taxes in New York are rapidly driving manufacturers to the near-by cities, and in a few weeks A. & F. Brown, manufacturers of pulleys, hangers and shafting, will have moved the principal portion of their works to Elizabeth, New Jersey. The machine shop of the old works on Lewis street, New York, which has been established there over 30 years, will be retained, but the remainder of the works will be leased for other business. Messrs. A. & F. Brown, of New York, will remove their office from 43 to 44 Park place on May 1st.

INVENTORS' RECORD.

Prepared expressly for THE ELECTRICIAN AND ELECTRICAL ENGINEER, *by* Pope, Edgecomb & Terry, *Solicitors of Patents for Electrical Inventions*, 11 *Wall Street, New York city.*

CLASSIFIED LIST OF UNITED STATES ELECTRICAL PATENTS.

From March 15 to April 12th, 1887 (inclusive).

Alarms and Signals:—*Electric Annunciator*, J. C. Kunkle, 360,447 and 360,448, April 5. *Annunciator and Shunt Circuit Therefor*, J. A. Barret, 360,266, March 29. *Fire Alarm*, A. Sewel, 359,694. *Electric Circuit for Telephones and Fire and Burglar Alarms*, S. Taussig, 359,824. *Electric Fire and Burglar Alarm*, same, 359,823, March 22. *Automatic Fire-Alarm System*, W. F. Singer, 360,824. *Electric Thermostat or Fire-Alarm*, same, 360,823, April 5. *Automatic Fire-Telegraph*, M. Martin, 360,968, April 12. *Combined Push-Button and Thermostat*, F. Keffer and J. A. McDowell, 359,260. *Electric Bell*, F. B. Wood, 359,309. *Police Telegraph System*, J. F. Mehren and W. Carroll, 359,575. *Druggist Alarm*, M. Toulmin, 359,581, March 15. *Municipal Signal Apparatus*, B. J. Noyes, 359,686, 359,687 and 359,688. *Individual Call for Municipal Telegraph System*, same, 359,689, March 22. *Burglar Alarm Clock*, C. E. Burnham, 360,338. *Electric Signal System*, C. Lambdin, 360,025. *Electric Indicator*, F. K. Fitch, 360,381, March 29. *Electric House-Bell*, E. G. Coleman, 360,660, April 5. *Hydrometer Alarm*, T. P. Whittier, 360,980. *Telegraphic Alarm Signal*, T. E. Mosher, 361,020. *Station Indicator*, W. D. Doremus, 361,146, April 12. *Lamp Post and Signal*, W. C. Smith, 360,252, March 29.

Clocks:—*Primary Electric Clock*, J. J. Abell and C. D. Gifford, 360,078. *Secondary Electric Clock*, W. B. Harvey, 360,092, March 29. *Electric Pendulum Clock*, A. L. Parcelle, 360,903, April 12.

Conductors, Insulators, Supports and Systems:—*Mode of Setting Telegraph Poles*, W. Murray, 359,622. *Electrical Conductor*, E. H. Johnson, 359,726. *Underground Conduit for Powerful Electric Currents*, G. B. Pennock, 359,738. *Insulator for Supporting and Holding Electric Wires*, H. Pennie, 359,812. *Terminal for Telegraph Lines or Cables*, W. H. Sawyer, 359,816. *Insulating Material*, C. M. Thompson, 359,825. *Lightning Rod Standard or Brace*, T. H. Patee and S. R. Lawshe, 359,940, March 22. *Conduit for Underground Conductors*, H. Loesner and M. De Bravura, 360,316. *Insulator*, W. F. Locke, 360,354, March 29. *Underground Railway and Pipe Subway*, B. F. Carpenter, 360,655. *Insulating and Protecting Electric Cables*, T. H. Dunham, 360,567, April 5. *Subway*, C. Scheidl, 361,086. *System of Supporting and Repairing Electric Conducting Wires, &c.*, H. Flad, 361,217, April 12.

Distribution:—*Electric Lighting System*, F. A. Cheney, 359,718. *Regulator for Electric Circuits*, J. A. Powers, 359,739, March 22. *System of Electric Distribution*, E. Thomson, 360,122 and 360,125. *Induction Coil*, O. T. Blathy, 360,198. *Automatic Electric Circuit Controller*, T. P. Conant, 360,375, March 29. *System of Electrical Distribution*, F. Van Rysselberghe, 360,492. *Electric Lighting System*, J. A. Powers, 360,538, April 5.

Dynamos and Motors:—*Dynamo-Electric Machine*, N. Tesla, 359,748; R. J. Sheehy, 359,894, March 22; H. E. Walter and C. Batchelor, 360,258 and 360,259, March 29. *Regulator for Dynamo-Electric Machines*, C. L. Buckingham, 359,770, March 22. *Armature for Dynamo-Electric Machines*, W. A. Leipner, 360,030, March 29. *Electric Motor*, E. P. Clark, 359,429, March 15; F. E. Fisher, 360,216, March 29; W. Baxter, Jr., 361,115. *Horizontal Governor for Electric Motors*, same, 361,116. *Journal-Bearing for Electric Motors*, same, 361,117, April 12.

Galvanic Batteries:—*Electric Battery*, K. Pollak, 359,690. *Battery Zinc*, J. Beattie, Jr., 359,835, March 22. *Galvanic Battery*, P. Jablochkoff, 360,158. *Galvanic Battery Solution*, W. P. Kookogey, 360,024, March 29. *Connection for Carbon Elements in Galvanic Batteries*, same, 360,532, April 5. *Cabinet Battery*, H. E. Waite, 360,934. *Solution for Galvanic Batteries*, D. H. Fitch, 361,004, April 12.

Ignition:—*Electric Igniter for Gas Engines*, N. C. Bassett, 359,552, March 15. *Electric Gas Burner*, C. W. Holtzer, 360,696, April 5.

Lamps and Appurtenances:—*Electric Lamp*, C. Seel, 359,328, March 15. *Electric Arc Lamp*, L. Hanson, 360,151; J. Tregoning, 360,254; W. A. Crowdus and H. M. Sutton, 360,377, March 29; C. F. Cooke, 360,662, April 5. *Electric Lamp and Socket*, C. G. Perkins, 360,244. *Reflector for Electric Lights*, W. W. Downing and A. B. Upham, 360,002. *Apparatus for Suspending Electric Lights*, G. P. Nichols and M. Coombs, Jr., 360,040, March 29. *Cellular Furnace for Baking Carbons*, J. Hill, 359,866. *Electric Lamp Frame*, T. H. Brady, 359,916, March 22. *Mercurial Pump Exhausting Apparatus*, W. Maxwell and T. V. Hughes, 361,174, April 12.

Measurement:—*Combined Volt and Ampere Meter*, R. Macrae, 359,619, March 22.

Medical and Surgical:—*Cautery Electrode and Shield*, D. H. Goodwille, 359,506, March 15. *Electric Sole*, F. B. Wallis, 360,127, March 29. *Electro-Cautery Instrument for Use in Surgery*, D. H. Goodwille, 360,429, April 5.

Metallurgy:—*Apparatus for Separating Metals from Ores and Alloys*, H. R. Cassel, 360,852, April 12.

Miscellaneous:—*Apparatus for Testing Electric Circuits*, A. D. Wheeler, 359,338. *Fluid-Pressure Motor*, G. Westinghouse, Jr., 359,303. *Electric Torpedo Boat*, H. M. Bennett, 359,313. *Electrical Apparatus for Regulating Temperature*, C. W. Johnson, 359,392. *Carrier for Electro-Pneumatic Despatch-Tube Systems*, J. F. McLaughlin, 359,456. *Electrical Pneumatic Despatch-Tube*, same, 359,540, March 15. *Apparatus for Controlling Low Pressures*, M. W. Grovesteen, 359,673. *Automatic Feed for Printing Presses*, J. A. Wetmore, 359,752. *Electrical Synchronal Escapement*, J. F. McLaughlin, 359,805. *Aerial Photographic Apparatus*, M. J. Steffens, 359,902. *Process of Curing India Rubber*, C. M. Thompson and O. Lugo, 359,907. *Coupling for Electric Conductors*, F. G. Plume, 359,982, March 22. *Electro-Magnetic Cut-Off*, E. Thomson, 360,123. *Automatic Cut-Off*, same, 360,124. *Electrical Apparatus for Heating and Cooling Buildings*, E. H. Johnson, 360,223. *Watchman's Time-Recorder*, E. J. Colby, 359,999. *Electric Furnace*, E. H. and A. H. Cowles, 360,144, March 29. *Apparatus for Re-Cutting Files*, J. E. Emley, 360,517. *Target Trap*, J. B. Bennett and F. W. Samuels, 360,647. *Connection-Hanger for Electrotyping Apparatus*, O. S. Fertig, 360,672. *Vapor-Bath*, E. Hosford, 360,773. *Electric-Instrument Protector*, I. H. Farnham, 360,570, April 5. *Electrical Apparatus for Separating Metallic Particles from Paper-Pulp*, C. H. Atkins, 360,842. *System of Indicating Time by Electric Lights*, P. B. Delany, 360,862. *Electric Wire Coupling*, R. Solano, 360,925. *Holder for Metal Articles*, H. D. Winton, 361,248. *Process of and Apparatus for Tanning by Electricity*, E. Worms and J. Balé, 361,249, April 12.

Railways and Appliances:—*Electric Railway*, I. W. Heysinger, 359,607, March 22. *Railway Signal*, M. W. Long, 359,512, March 15; G. H. Wright, 360,077. *Electric Railway Signal*, J. McM. Scott, 360,175, March 29. *Railway Electric Signaling Apparatus*, G. Westinghouse, Jr., 360,638, April 5. *Automatic Electric Air-Brake*, J. F. Carpenter, 359,593, March 22. *Electric Car Brake*, E. A. Sperry, 360,060. *Power-Brake*, R. Solano, 360,179, March 29. *Railroad Brake*, C. Selden, 361,090; *Automatic Car-Brake*, same, 361,089, April 12. *Railway-Crossing Alarm*, S. P. Van Nort, 359,371, March 15. *Railway Car Telegraphy*, J. A. Barrett, 359,990, March 29.

Secondary Batteries:—*Secondary Battery*, A. V. Meserole, 359,877; W. Main, 359,934, March 22. *Positive-Pole Plate for Secondary Batteries or Accumulators*, S. Farbaky and S. Schenek, 359,248, March 15. *Process of Preparing Secondary Battery Plates*, A. V. Meserole, 359,876. *Charging and Discharging Secondary Batteries*, E. T. Starr, 359,900; *Mechanism for Charging Secondary Batteries*, same, 359,901, March 22.

Telegraphs:—*Telegraphy*, W. T. Barnard, 360,844; A. M. A. Beale, 360,986, and 360,987 April 12. *Quadruplex Telegraphy*, F. W. Jones, 360,528, April 5. *Multiple Telegraph System*, A. M. A. Beale, 360,988. *Automatic Printing-Telegraph*, C. G. Burke, 360,994 and 360,995, April 12. See *Railways*, last item.

Telephones, Systems and Apparatus:—*Telephone*, H. E. Waite, 360,068, March 29. *Telephone Receiver*, J. H. Tabony, 360,626, April 5. *Telephone Transmitter*, W. Burnley, 361,047. *Telephoning*, J. W. Bonta, 361,124, April 12. *Return Attachment for Telephone Toll-Collectors*, C. Wittenberg, 359,306; *Telephone Register*, same, 359,307 and 359,308. *Telephone Switch*, C. A. Hitchcock, 359,356. *Telephone Cabinet*, C. B. Balloch, 359,492, March 15. *Telephone Signal*, C. R. Swain, 359,984, March 22. *Electro-Acoustic Apparatus*, A. A. Knudson, 360,308. *Mechanical Telephone*, C. M. Radford, 360,362, March 29. *Toll-Collecting Apparatus for Public Telephone Stations*, J. H. Tabony, 359,747, March 22.

Digitized by Google

THE ELECTRICIAN
AND
ELECTRICAL ENGINEER.

Conducted by F. L. POPE. G. M. PHELPS, JR., Associate Editor.

PUBLISHED MONTHLY BY

THE ELECTRICAL PUBLISHING CO.,

115 Nassau Street, New York city.

European Agent, F. H. WEBB, 4, The Sanctuary, Westminster, London, S.W., Eng.

TERMS OF SUBSCRIPTION.

United States and Canada,	per annum,	$3.00
Four or more Copies, in Clubs (each)	"	2.50
One Copy, Four Months,		1.00
Great Britain and other Foreign Countries within the Postal Union	"	4.00
Single Copies,		.25

[*Entered at the Post Office at New York, N. Y., as second class mail matter.*]

EDITORIAL ANNOUNCEMENTS.

Addresses.—*Business letters should be addressed and drafts, checks and post-office orders made payable to the order of the* ELECTRICAL PUBLISHING CO. *Communications for the attention of the editors should be addressed,* EDITOR OF THE ELECTRICIAN AND ELECTRICAL ENGINEER, 115 *Nassau Street, New York city.*

Communications *suitable for our columns will be welcomed from any quarter. Discussions of subjects relating to all branches of electro-technical work, by persons practically acquainted with them, are especially desired. Unavailable and rejected manuscripts will be returned only when accompanied by the necessary postage.*

Advertisements.—*We can entertain no proposition to publish anything for pay, or in consideration of advertising patronage, except in our advertising columns. Our editorial columns will express our own opinions only, and we shall present in other columns only such matter as we consider of interest or value to our readers*

NEW YORK, JUNE, 1887.

THE AMERICAN INSTITUTE OF ELECTRICAL ENGINEERS.

THE founders and members of the American Institute of Electrical Engineers, have cause for extreme gratification in the work of the Annual and General Meetings, May 17th and 18th. Their gratification will be shared by all interested in any way in the development of electrical science or of the useful arts based upon it. The columns of our present issue are largely devoted to the report of the meetings, and contain all of the papers read at the general meeting, on Wednesday, the 18th. Their perusal will make clear to our readers the reasons for satisfaction to which we have alluded. The attendance as well as the character of the papers read and of the discussions following, well attest the success of the Institute in drawing together the labors of scientific investigators and practical workers in the field of electric engineering, and illustrate afresh the close interdependence of research in the laboratory and practice in factory or afield, in developing improved methods and results. The astounding rapidity with which electricity has reached out for, taken and held new fields, is a significant, perhaps the most striking, feature in the general advance in the arts of utility so characteristic of the present period. That the American Institute of Electrical Engineers will maintain its part of the work, is shown by its steadily improving record during the three years of its existence; that it will put itself on a firmer basis and augment its usefulness may be confidently expected from the movement so promisingly initiated at the recent meeting towards securing permanent quarters, a home of its own, with an assembly room, sufficient space for a library, reading room, museum, and such other uses as the needs of the Institute will require. The project met with such cordial response, and was so generally supported that its success may be taken as assured. We print elsewhere a list of subscriptions to the house fund up to May 28th, amounting to $3,950, a most encouraging beginning. The Council of the Institute took the matter up energetically at a special meeting May 24th, appointing a special committee to carry on the work. The Institute did well at the annual meeting, in electing Mr. T. Commerford Martin, president. It is not too much to say that no one has been more deeply interested in the success of the Institute, nor more active and efficient in its work. We expect to be able to congratulate Mr. Martin upon including in his term the accomplishment of the Institute's undertaking, so hopefully begun, to provide itself a habitation.

ELECTRICITY FOR STREET RAILWAYS.

IT sometimes happens that a person unfamiliar with optical apparatus is best able to appreciate the magnifying power of a telescope by looking at familiar objects through its larger end, and not infrequently the true conditions of other problems may be best apprehended by viewing them inversely. Applying this method to a question of great practical importance just now exciting public interest, let us suppose a manufacturing establishment situated in the heart of a city like New York, where real estate is held at a high value, in which 150 machines each requiring 10 mechanical horse-power are driven by the usual equipment of steam engines and boilers. Now, let us suppose further that the New York State Legislature, in the exercise of the intelligent discretion which that august body invariably applies to the regulation of the internal affairs of the metropolis, should decree on and after a certain date "it shall not be lawful to operate machinery by steam or any other power than horse-power within the limits of said city," so that it would become necessary for the proprietors of the establishment to purchase a sufficient number of animals to supply 1,500 h. p. continuously, together with the necessary additional real estate in the immediate vicinity, whereon to erect buildings and furnish stable accommodations for the few thousand head of live stock required, and to add the cost of provender, attendance, replacement, etc. We imagine that the parties concerned would regard themselves as extremely fortunate if the cost of power under the new conditions proved to be less than five or six times as much as before. Yet the situation we have pictured, does not materially exaggerate the existing condition of affairs in respect to city transportation. A single street railway line in New York has in service about 350 cars and 2,000 horses. Not less than 1,500 h. p. must be constantly employed in the movement of the traffic, yet it would probably be difficult to convince the managers of this or any similarly situated surface railroad company that the whole line might be operated by a central steam plant and electric motors, at something like one-fourth the cost, for power, of the existing system. The paper of Mr. T. C. Martin, read at the

Digitized by Google

recent annual meeting of the electrical engineers, showed conclusively that so far as the use of electric power on small roads with light traffic is concerned, the domain of experiment has already been passed. Electric traction has become a settled fact, and from present indications, nothing can be more certain than that the smaller street railroad systems of the United States will adopt the new method as rapidly as the required machinery can be constructed and applied. In the case of lines in larger cities with heavier traffic, a similar result may be looked for at no distant day. No valid reason can be adduced why the electric system may not be applied to the more important lines with even greater proportionate economy than has been the case with small roads. It is probable that the only serious obstacle to the change will be the spirit of caution and conservatism naturally inherent in the minds of the managers of corporations having thousands and even millions of dollars invested in horse-power plant, which will lead them to ponder long and carefully before committing themselves to an innovation so radical, and necessarily accompanied with so large an expenditure. Nevertheless the advantages of the electric system in point of economy and of public convenience must ultimately prove so controlling that it hardly seems probable that even in such cases the inevitable change will be long delayed.

Mr. Martin's summary, which we print in another column, shows that there are now running in this country 11 electric railways, equipped with 68 motors and motor cars, and that a much larger number are either under contract or in course of construction. The systems of electric distribution from a central station both by conductors and by accumulators have proved successful in practice, and it is difficult to imagine any difficulties of operation which cannot be surmounted by one or the other of these methods or by a combination of the two. Investigations and comparisons of the different methods of electrical propulsion are being made by some of the largest street railway companies in the country, and such investigations, can have, we are confident, but one result.

LET THIS BE A WARNING.

On the morning of May 27th, the City of New York had an exceedingly narrow escape from the fate which was precipitated upon a sister metropolis by the ill-timed kick of Mrs. O'Leary's cow. A disastrous conflagration broke out in the car-house and stables of the Belt Line railway, which in a brief space of time consumed not only the immense building, but nearly the entire equipment of the road, including 1,185 horses, 145 cars, and a vast quantity of supplies, involving a total loss of over three-quarters of a million dollars. The neighborhood was thickly built up with flimsy brick and frame structures, twenty-five or more of which succumbed to the flames so quickly, that the occupants with difficulty escaped with their lives. For a time the fire was wholly beyond the control of the department, and had there been, as frequently happens at this time of year, a north-westerly wind from the river, the greater portion of New York city would inevitably have been swept from the face of the earth. But there still remain half a dozen more gigantic tinder-boxes of similar character and construction, every one of which is certainly destined sooner or later to meet with the same fate. These vast aggregations of combustible material constitute a perpetual menace to the safety of every building in the city, and it is high time that stringent measures were taken to abolish them. The outcry which has been kept up by interested parties against the comparatively harmless telegraph wires appears somewhat ludicrous, when we consider how uncomplainingly our citizens endure the continual blockade of their sidewalks by skids, merchandise and peanut-stands, and of their streets by endless rows of trucks and wagons belonging to Jerseymen and Long Islanders; and above all the nightly danger of being cremated in their beds by the admirably devised fire-traps of the horse-railroad companies. With the cable and more especially the electric systems of transport at their disposal, the erection by these corporations of any more such structures in a crowded city like New York, is little less than criminal, and ought not to be tolerated for a moment. The losses incurred in this one fire would more than cover the cost of changing the entire equipment of the Belt Line to an electric system. We trust that this disaster will at least have the good result of compelling serious attention to the improved methods of transportation which modern science has developed.

INSTITUTE NOTES.

The interesting character of the May meeting of the Institute of Electrical Engineers, together with the hearty inauguration of a plan to secure a permanent location in a house of its own, have stimulated the desire for membership remarkably. Some 30 new members have been added since May 17th. In another column we print the full list of officers for 1886-87, and of the membership as it stood May 25th.

The New York Electrical Society (now the electrical section of the American Institute) having undertaken an Electrical Exhibition to be held next autumn (Sept. 28th–Dec. 3d) in connection with the annual exhibition of the American Institute, the Council of the Institute of Electrical Engineers has pledged its hearty interest and support to the project.

The exhibition is intended to include all applications of electricity, and will afford an excellent opportunity to inventors and manufacturers. Information will be furnished by Mr. J. M. Pendleton, President of the society, 49 Broadway; Mr. J. Wetzler, Secretary, 175 Potter Building, or Mr. C. W. Hull, Superintendent of the American Institute, Clinton Hall.

In aid of the House Fund, the Council of the Institute has decided to arrange a Course of Lectures on electrical subjects, to be delivered in a large hall during the fall and early winter. It is intended to have the lectures of a somewhat popular character, though not wanting in sound scientific foundation. It is believed that general interest in electrical arts is so rapidly increasing as to insure popular support to such a course. Gentlemen well known for their ability and attainments will be invited to lecture; several having already promised their services; among them Prof. Elihu Thomson, Mr. T. D. Lockwood and Mr. E. H. Johnson.

It is thought probable that a way will be found, through the joint efforts of the Institute of Electrical Engineers and the New York Electrical Society, to combine the Electrical Exhibition and the Course of Lectures, thus increasing the attractiveness and usefulness of both.

Digitized by Google

ARTICLES.

NOVEL PHENOMENA OF ALTERNATING CURRENTS.[1]

BY ELIHU THOMSON.

The actions produced and producible by the agency of alternating currents of considerable energy, are assuming greater importance in the electric arts. I mean, of course, by the term alternating currents, currents of electricity reversed at frequent intervals, so that a positive flow is succeeded by a negative flow, and that again by a positive flow, such reversals occurring many times in a second, so that the curve of current or of electromotive-force will, if plotted, be a wave line, the amplitude of which is the arithmetical sum of the positive and negative maxima of current or electromotive-force, as the case may be, while a horizontal middle line joins the zero points of current or electromotive-force.

It is well known that such a current passing in a coil or conductor laid parallel with or in inductive relation to a second coil or conductor, will induce in the second conductor, if on open circuit, alternating electromotive forces, and that if its terminals be closed or joined, alternating currents of the same rhythm, period or pitch, will circulate in the second conductor. This is the action occurring in any induction coil whose primary wire is traversed by alternating currents, and whose secondary wire is closed either upon itself directly or through a resistance. What I desire to draw attention to in the present paper are the mechanical actions of attraction and repulsion which will be exhibited between the two conductors, and the novel results which may be obtained by modifications in the relative dispositions of the two conductors.

In 1884, while preparing for the International Electrical Exhibition at Philadelphia, we had occasion to construct a large electro-magnet, the cores of which were about six inches in diameter and about twenty inches long. They were made of bundles of iron rod of about $\frac{1}{4}$ inch diameter. When complete the magnet was energized by the current of a dynamo giving continuous currents, and it exhibited

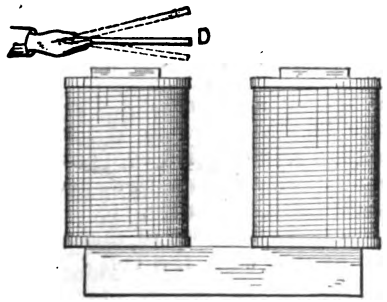

FIGURE 1.

the usual powerful magnetic effects. It was found also that a disc of sheet copper, of about $\frac{1}{16}$ inch thickness and 10 inches in diameter, if dropped flat against a pole of the magnet, would settle down softly upon it, being retarded by the development of currents in the disc due to its movement in a strong magnetic field, and which currents were of opposite direction to those in the coils of the magnet. In fact, it was impossible to strike the magnet pole a sharp blow with the disc even when the attempt was made by holding one edge of the disc in the hand and bringing it down forcibly towards the magnet. In attempting to raise the disc quickly off the pole, a similar but opposite action of resistance to movement took place, showing the development of currents in the same direction to those in the coils of the magnet, and which currents, of course, would cause attraction as a result.

The experiment was, however, varied, as in figure 1. The disc D was held over the magnet pole, as shown, and the current in the magnet coils cut off by shunting them. There was felt an attraction of the disc or a dip toward the pole. The current was then put on by opening the shunting switch and a repulsive action or lift of the disc was felt. The actions just described are what would be expected in such a case, for when attraction took place, currents had been induced in the disc D in the same direction as those in the magnet coils beneath it, and when repulsion took place the induced current in the disc was of opposite character or direction to that in the coils.

Now let us imagine the current in the magnet coils to be not only cut off, but reversed back and forth. For the reasons just given we will find that the disc D is attracted and repelled alternately, for, whenever the currents induced in it are of the same direction with those in the inducing, or magnet coil, attraction will ensue, and when they are opposite in direction, repulsion will be produced. Moreover, the repulsion will be produced when the current in the magnet coil is rising to a maximum in either direction, and attraction will be the result when the current of either direction is falling to zero, since in the former case opposite currents are induced in the disc D in accordance with well-known laws; and in the latter case currents of the same direction will exist in the disc D and the magnet coil. The disc might, of course, be replaced by a ring of copper or other good conductor, or by a closed coil of bare or insulated wire, or by a series of discs, rings or coils superposed, and the results would be the same. Thus far, indeed, we have nothing of a particularly novel character, and, doubtless, other experimenters have made very similar experiments and noted similar results to those described.

The account just given of the effects produced by alternating currents, while true, is not the whole truth, and just here we may supplement it by the following theorems:

An alternating current circuit or coil repels and attracts a closed circuit or coil placed in direct or magnetic inductive relation therewith, but the repulsive effect is in excess of the attractive effect.

When the closed circuit or coil is so placed, and is of such low resistance metal that a comparatively large current can circulate as an induced current, so as to be subject to a large self-induction, the repulsive far exceeds the attractive effort.

For want of a better name I shall call this excess of repulsive effect the "electro-inductive repulsion" of the coils or circuits.

This preponderating repulsive effect may be utilized or may show its presence by producing movement or pressure in a given direction, by producing angular deflection as of a pivoted body, or by producing continuous rotation with a properly organized structure. Some of the simple devices realizing the conditions I will now describe.

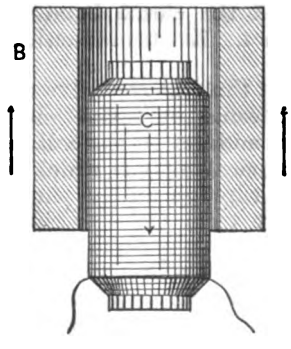

FIGURE 2.

In figure 2 C is a coil traversed by alternating currents, B is a copper case or tube surrounding it, but not

1. Read before the American Institute of Electrical Engineers, May 18th, 1887.

Digitized by Google

exactly over its centre. The copper tube B is fairly massive and is the seat of heavy induced currents. There is a preponderance of repulsive action tending to force the two conductors apart in an axial line. The part B may be replaced by concentric tubes slid one in the other, or by a pile of flat rings, or by a closed coil of coarse or fine wire insulated or not. If the coil C, or primary coil, is provided with an iron core such as a bundle of fine iron wires, the effects are greatly increased in intensity and the repulsion with a strong primary current may become quite vigorous, many pounds of thrust being producible by apparatus of quite moderate size.

The forms and relations of the two parts C and B may be greatly modified with the general result of a preponderance of repulsive action when the alternating currents circulate.

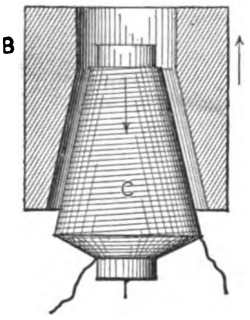

FIGURE 3.

Figure 3 shows the part B of an internally tapered or coned form, and C of an externally coned form, wound on an iron wire bundle I. The action in figure 2 may be said to be analogous to that of a plain solenoid with its core, except that repulsion and not attraction, is produced, while that of figure 3 is more like the action of tapered or conically wound solenoids and taper cores. Of course it is unnecessary that both be tapered. The effect of such shaping is simply to modify the range of action and the amount of repulsive effort existing at different parts of the range.

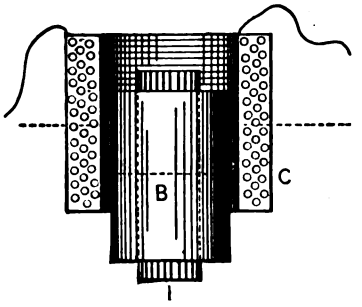

FIGURE 4.

In figure 4 the arrangement is modified so that the coil C is outside, and the closed band or circuit B inside and around the core I. Electro-inductive repulsion is produced as before.

It will be evident that the repulsive actions will not be mechanically manifested by axial movement or effort, when the electrical middles of the coils or circuits are coincident. In cylindrical coils in which the current is uniformly distributed through all the parts of the conductor section, what I here term the electrical middle, or the centre of gravity of the ampere turns of the coils, will be the plane at right angles to its axis at its middle, that of B and C in figure 4 being indicated by a dotted line. To repeat, then, when the centres or centre planes of the conductors, figure 4, coincide, no indication of electro-inductive repulsion is given, because it is mutually balanced in all directions; but when the coils are displaced, a repulsion is manifested, which reaches a maximum at a position depending on the peculiarities of proportion and distribution of current at any time in the two circuits or conductors.

It is not my purpose now to discuss the ways of determining the distribution of currents and mechanical effects, as that would extend the present paper much beyond its intended limit. The forms and relative arrangement of the two conductors may be greatly varied. In figure 5

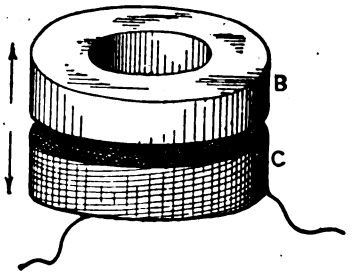

FIGURE 5.

the parts are of equal diameter, one, B, being a closed ring, and the other, C, being an annular coil placed parallel thereto, and an iron core or wire bundle placed in the common axis of the two coils increases the repulsive action. B may be simply a disc or plate of any form without greatly affecting the nature of the action produced. It may also be composed of a pile of copper washers or a coil of wire, as before indicated.

An arrangement of parts somewhat analogous to that of a horseshoe electro-magnet and armature is shown in

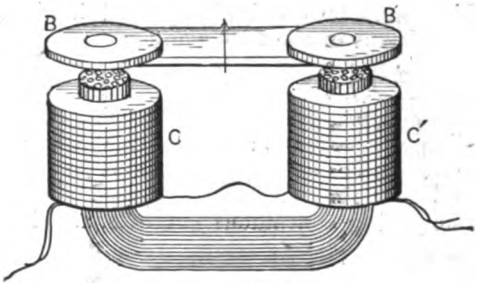

FIGURE 6.

figure 6. The alternating current coils C C′ are wound upon an iron wire bundle bent into U-form, and opposite its poles is placed a pair of thick copper discs B B′, which are attracted and repelled, but with an access of repulsion depending on their form, thickness, etc.

If the iron core takes the form of that shown by I I, figure 7, such as a cut ring with the coil C wound thereon,

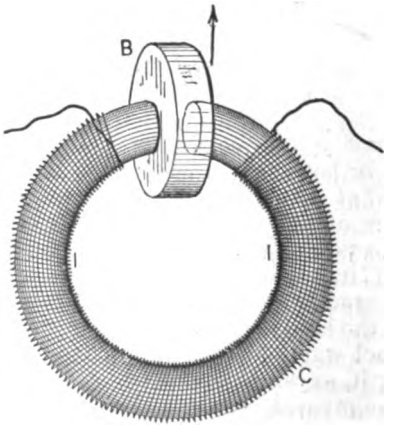

FIGURE 7.

the insertion of a heavy copper plate B into the slot or divided portion of the ring will be opposed by a repulsive effort when alternating currents pass in C. This was the

Digitized by Google

first form of device in which I noticed the phenomenon of repulsive preponderance, in question. The tendency is to thrust the plate B out of the slot in the ring excepting only when its centre is coincident with the magnetic axis joining the poles of the ring between which B is placed.

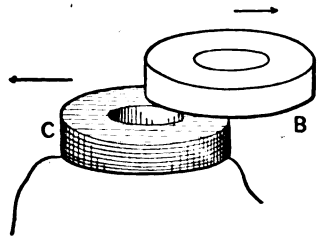

FIGURE 8.

If the axis of the conductors, figure 5, are not coincident but displaced as in figure 8, then, besides a simple repulsion apart, there is a lateral component or tendency as indicated by the arrows. Akin to this is the experiment illustrated in figure 9. Here the closed conductor B is

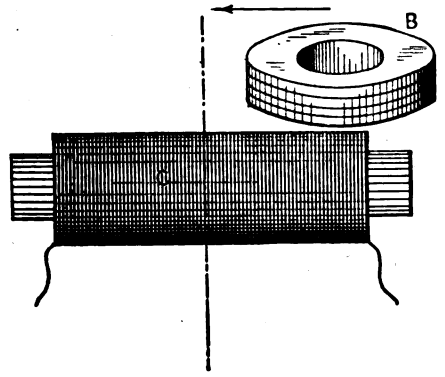

FIGURE 9.

placed with its plane at right angles to that of C, wound on a wire bundle. The part B tends to move toward the centre of the coil C, so that its axis will be in the middle plane of C, transverse to the core, as indicated by the dotted line. This leads us at once to another class of actions, *i. e.*, deflective actions.

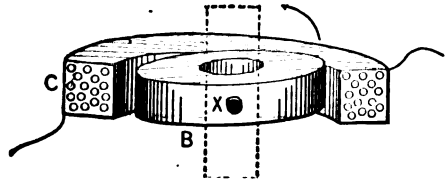

FIGURE 10.

When one of the conductors, as B, figure 10, composed of a disc, or better, of a pile of thin copper discs, or of a closed coil of wire, is mounted on an axis X, transverse to the axis of coil C, through which coil the alternating current passes, a deflection of B to the position indicated by dotted lines will take place, unless the plane of B is at the start exactly coincident with that of C. If slightly inclined at the start, deflection will be caused as stated. It matters not whether the coil C incloses the part B or be inclosed by it, or whether the coil C be pivoted and B fixed, or both be pivoted. In figure 11 the coil C surrounds an iron wire core, I and B is pivoted above it, as shown. It is deflected, as before, to the position indicated in dotted lines.

It is important to remark here that, in cases where deflection is to be obtained, as in figures 10 and 11, B had best be made of a pile of thin washers or a closed coil of insulated wire instead of a solid ring. This avoids the lessening of effect which would come from the induction of currents in the ring B in other directions than parallel to its circumference.

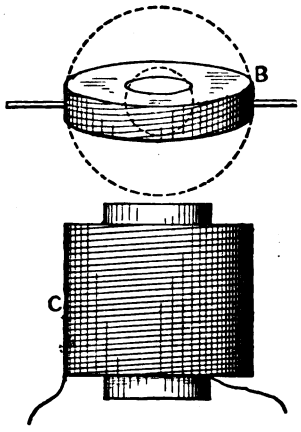

FIGURE 11.

We will now turn our attention to the explanation of the actions exhibited, and afterwards refer to their possible applications. It may be stated as certainly true that were the induced currents in the closed conductor unaffected by any self-induction, the only phenomena exhibited would be alternate equal attractions and repulsions, because currents would be induced in opposite directions to that of the primary current when the latter current was changing from zero to maximum, positive or negative current, so producing repulsion; and would be induced in the same direction when changing from maximum positive or negative value to zero, so producing attraction.

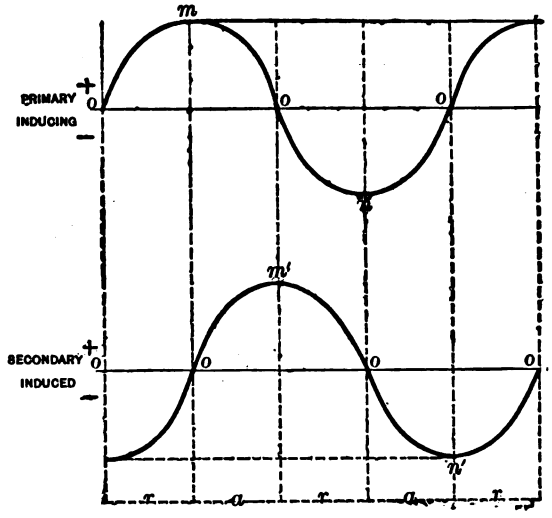

FIGURE 12.

This condition can be illustrated by a diagram, figure 12. Here the lines of zero current are the horizontal straight lines. The wavy lines represent the variations of current strength in each conductor, the current in one direction being indicated by that portion of the curve above the zero line, and in the other direction by that portion below it. The vertical dotted lines simply mark off corresponding portions of phase or succession of times.

Here it will be seen that in the positive primary current descending from *m*, its maximum to the zero line, the secondary current has risen from its zero to *m* , its maximum. Attraction will therefore ensue. for the currents are in the same direction in the two conductors. When the primary current increases from zero to its negative maximum *n*, the positive current in the secondary closed circuit

Digitized by Google

will be decreasing from m^1, its positive maximum to zero; but as the currents are in opposite directions, repulsion will occur. These actions of attraction and repulsion will be reproduced continually, there being a repulsion, then an attraction, then a repulsion, and again an attraction, during one complete wave of the primary current. The letters *r*, *a*, at the foot of the diagram, figure 12, indicate this succession.

In reality, however, the effects of self-induction in causing a lag shift, or retardation of phase in the secondary current, will considerably modify the results, and especially so when the secondary conductor is constructed so as to give to such self-induction a large value. In other words, the maxima of the primary or inducing current will no longer be found coincident with the zero points of the secondary currents. The effect will be the same as if the line representing the wave of the secondary current in figure 12 had been shifted forward to a greater or less extent. This is indicated in diagram, figure 13. It gives

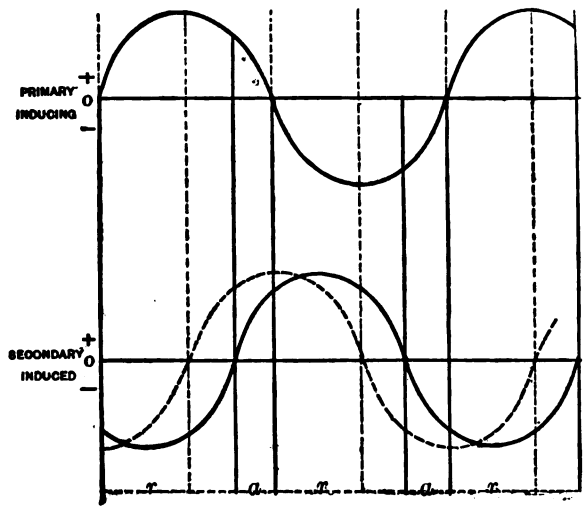

FIGURE 13.

doubtless an exaggerated view of the action, though from the effects of repulsion which I have produced I should say it is by no means an unrealizable condition.

It will be noticed that the period during which the currents are opposite, and during which repulsion can take place, is lengthened at the expense of the period during which the currents are in the same direction for attractive action. These differing periods are marked *r*, *a*, etc., or the period during which *repulsion* exists is from the zero of the primary or inducing current to the succeeding zero of the secondary or induced current; and the period during which *attraction* exists is from the zero of the induced current to the zero of inducing current.

But far more important still in giving prominence to the repulsive effect than this difference of effective period, is the fact that during the period of repulsion both the inducing and induced currents have their greatest values, while during the period of attraction the currents are of small amounts comparatively. This condition may be otherwise expressed by saying that the period during which repulsion occurs includes all the maxima of current, while the period of attraction includes no maxima. There is then a *repulsion due to the summative effects of strong opposite currents* for a *lengthened period*, against an *attraction* due to the summative effects of *weak currents* of the *same direction* during a *shortened period*, the resultant effect being a greatly *preponderating* repulsion.

It is now not difficult to understand all the actions before described as obtained with the varied relations of coils, magnetic fields and closed circuits. It will be easily understood, also, that an alternating magnetic field is in all respects the same as an alternating current coil in producing repulsion on the closed conductor, because the repulsions between the two conductors are the result of magnetic repulsions arising from opposing fields produced by the coils when the currents are of opposite directions in them.

Thus far I have applied the repulsive action described in the construction of alternating current indicators, alternating current arc lamps, regulating devices for alternating currents, and to rotary motors for such currents. For current indicators, a pivoted or suspended copper band or ring composed of thin washers piled together and insulated from one another and made to carry a pointer or index, has been placed in the axis of a coil conveying alternating currents whose amount or potential is to be indicated. Gravity or a spring is used to bring the index to the zero of a divided scale, at which time the plane of the copper ring or band makes an angle of, say, 15 degrees to 20 degrees with the plane of the coil. This angle is increased by deflection more or less great, according to the current traversing the coil. The instrument can be calibrated for set conditions of use. Time would not permit of a full description of these arrangements as made up to the present.

In arc lamps the magnet for forming the arc can be composed of a closed conductor, a coil for the passage of current, and an iron wire core. The repulsive action upon the closed conductor lifts and regulates the carbons in much the same manner that electro-magnets do when continuous currents are used. The electro-inductive repulsive action has also been applied to regulating devices for alternating currents, with the details of which I cannot now deal.

For the construction of an alternating current motor which can be started from a state of rest the principle has also been applied, and it may here be remarked, that a number of designs of such motors are practicable.

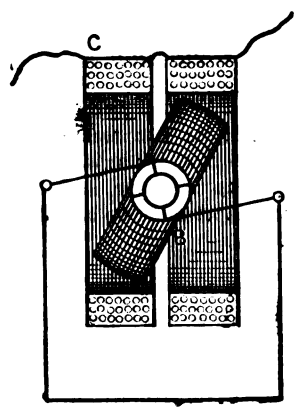

FIGURE 14.

One of the simplest is as follows: The coils C, figure 14, are traversed by an alternating current and are placed over a coil B, mounted upon a horizontal axis, transverse to the axis of the coils C. The terminals of the coils B, which is wound with insulated wire, are carried to a commutator, the brushes being connected by a wire as indicated. The commutator is so constructed as to keep the coil B on short circuit from the position of coincidence with the plane of C, to the position where the plane of B is at right angles to that of C; and to keep the coil B open circuited from the right angled position or thereabouts to the position of parallel or coincident planes. The deflective repulsion exhibited by B will, when its circuit is completed by the commutator and brushes, as described, act to place its plane at right angles to that of C, but being then open-circuited its momentum carries it to the position just past parallelism, at which moment it is again short-circuited, and so on. It is capable of very rapid rotation, but its

Digitized by Google

energy is small. I have, however, extended the principle to the construction of more complete apparatus. One form has its revolving portion or armature composed of a number of sheet iron discs wound as usual with three coils crossing near the shaft. The commutator is arranged to short-circuit each of these coils in succession, and twice in a revolution, and for a period of 90 degrees of rotation each. The field coils surround the armature and there is a laminated iron field structure completing the magnetic circuit. I may say here that surrounding the armature of a dynamo by the field coils, though very recently put forth as a new departure, was described in various Thomson-Houston patents, and to a certain extent all Thomson-Houston machines embody this feature.

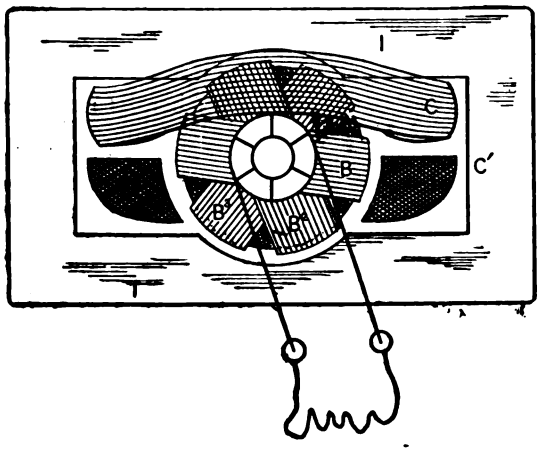

FIGURE 15.

Figs. 15 and 16 will give an idea of the construction of the motor referred to. C C¹ are the field coils or inducing coils which alone are put into the alternating current circuit. I I is a mass of laminated iron, in the interior of which the armature revolves, with its three coils B, B', B² wound on a core of sheet-iron discs. The commutator short-circuits the armature coils in succession in the proper positions to utilize the repulsive effect set up by the currents which are induced in them by the alternations in the field coils. The motor has no dead point and will start from a state of rest and give out considerable power, but with what economy is not yet known.

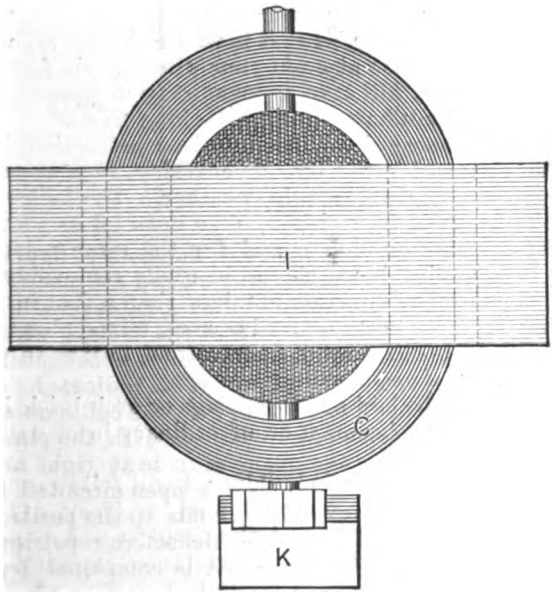

FIGURE 16.

A curious property of the machine is that at a certain speed, depending on the rapidity of the alternations in the coil C, a continuous current passes from one commutator brush to the other, and it will energize electro-magnets and perform other actions of direct currents. Here we have, then, a means of inducing direct currents from alternating currents. To control the speed and keep it at that required for the purpose, we have only to properly gear the motor to another of the ordinary type for alternating currents, namely, an alternating current dynamo used as a motor. The charging of storage batteries would not be difficult with such a machine, even from an alternating current line, though the losses might be considerable.

CENTRAL STATION CONSTRUCTION.[1]

BY J. A. POWERS.

THERE are two ways of constructing a central station for electric lighting, each of which has its special object. They may be defined as the speculative and the investment plans. The first has as its legitimate, or rather illegitimate end, the sale of the plant to some unfortunate, perhaps unwilling capitalist, by fair means or foul. We may consider as fair means the not uncommon method of selling a small portion of the stock, perhaps just enough to pay for the apparatus, on the strength of a showy exhibition in the hands of an expert, who uses all the tricks of the trade to persuade his lambs that his system will produce double the light with half the power of any other, and the other customary arguments.

The foul means is the border ruffian money-or-your-life policy, which enters a territory already sufficiently well served, not for fair competition, but to make money by being bought out.

The electric light business is rapidly emerging from the border ruffian and blackmailing stage, and, as we may shortly expect these methods to be relegated to their proper realm with other things dead and dishonorable, with the growth of popular knowledge of electrical matters, we will leave them, and proceed to the more legitimate methods, which I hope you will all pursue.

"The fool doth think he is wise, but the wise man knows himself to be a fool," said the master of all writers, and that I may be saved entering the first class in your presence, I here confess to many and grievous mistakes in our own central station construction, to which this paper owes its being, for that I may hope to save some of you part of my errors is my only excuse for appearing before you.

Let us, then, drop speculation as a thing of the past in our business, and make our object the construction of such work as shall produce, in the sober judgment of every business man among you, the best results in economy of labor, supplies and power, with the least expenditure for interest, taxes, insurance and repairs.

In all manufacturing enterprises of the day, one tendency is unmistakably felt. It is the direction of thorough work. To succeed in any established business one must have substantial buildings, the *best* improved machinery, the best site for obtaining necessary supplies at their cheapest. Electric lighting to-day has risen from the slough of speculation and stands side by side with other great manufacturing enterprises in importance. Not less than sixty millions of dollars are invested in lighting plants alone, and in the entire field probably not less than double that sum. Has not the time come when the same laws of strict economy which obtain in other large enterprises should govern central station construction?

Let us carefully consider our problem, plan cautiously, and expend liberally in the directions which indicate the best results. It is evident, however, that we should not expend without limit. Where shall we draw the line? I believe we are safe in expending every dollar which is sure of saving 10 per cent. interest on its investment, provided we have it to spend. The only danger in the path

1. Paper read before the American Institute of Electrical Engineers, May 18th, 1887.

Digitized by Google

seems to be the chance of such improvements as shall throw aside our present methods of producing electricity. Let us for a moment consider the possibilities in this direction. The best dynamos will to-day, in ordinary practice, convert eighty to eighty-five per cent. of the power furnished them into an equivalent of electricity. Clearly there can be but small improvement here. Coal or similar fuel is the common source of power to-day, and seems likely to remain so. The best steam plants give one horse-power hour for about one and one-half pounds of coal. The actual energy stored in that one and one-half pounds of coal would give about seven horse-power hours if it could be converted into power without loss, or, in other words, the best steam plants of to-day have an efficiency of about 13 per cent.

Prof. Houston remarked, at the last convention of the National Electric Light Association, that the field where lies the greatest chance for improvement is in the direction of thermo-electricity, the conversion of heat into electricity without the intervention of power. This is most certainly so; for if a process can be discovered which will have a reasonable efficiency, say 25 per cent., electric motors must soon supersede steam engines for power. The nature of the losses connected with the conversion of heat into other forms of energy does not, however, give much encouragement in this direction. The nature of such losses is in the diffusion of heat by conduction and radiation, which has always proved most difficult of control. If a process of simple conversion, without the attendant development of heat, can be devised, the chances of a good efficiency would be much improved, but where heat exists, there is radiation, and where radiation is, there will be serious loss. How serious, we can only judge from our experience with the steam and other heat engines. It is probable that we are safe in investments in our expensive steam plants, at least to the extent of the life of these plants. Let us then return to our subject proper. The first matter of importance to be decided in establishing an electric light station is its location. The necessary qualifications for location may be classed about as follows:

1st. A dry soil—a gravelly soil which will easily leach away the runnings from small drips or leaks, is preferable, next to solid rock. If located near a river, a wide margin of safety from flood should be allowed.

2d. If practicable, a location near a plentiful water supply should be chosen. Condensation of either high or low pressure engines is desirable in every way, and requires a large water supply.

3d. Nearness to the coal supply. If possible, locate near a navigable stream, so as to secure cheapness of handling coal and a plentiful supply of water. If not near navigable water, get a location on a railroad switch, and if possible, near the water supply. If the two conditions cannot be fulfilled, you may make your choice between them, remembering that each additional handling of coal will cost about 10 cents per ton, and extra haul about 10 cents per 1,000 feet, and, on the other hand, that condensing your engines will probably save between 15 per cent. and 25 per cent. of your coal expense. The pressing necessity for locating near the lighting field has largely passed away with the introduction of long-distance systems of incandescent lighting.

Having determined on a location, the character of building to be erected must next be considered. The most important single condition essential to the success of the electric light business is continuous and reliable service to customers. The most disastrous calamity which can befall an electric lighting business, is the destruction of its central station. The first thing necessary to prevent such a calamity, is a building practically fireproof, and I believe a brick building best fulfills these conditions. Let the walls be bare, make all floors double planked and supported on iron beams, use no wood ceiling, however seductive it may be in improving the appearance of your station; leave as few openings as possible through the floors; have a nearly flat roof with fire walls projecting above, and the building will be as nearly fireproof as it can be, and at the same time fulfill the other essential conditions of insulation, and a reasonable expenditure of capital. Before leaving the matter of fire protection, let me strongly advocate the use of some good automatic sprinkler except in the dynamo room, and especially in parts of the building unoccupied during portions of the day, a stand pipe connected with your spare pump with nozzles on each floor, a few lengths of mill hose; a cask or two set in convenient places and kept filled with water and a few firepails near are cheaply provided, and the improvement in insurance rates will soon pay for them. At Troy the reduction of rates has paid for the entire fire outfit in the saving in one year's premiums.

Before we design our station further, let me remark that the old adage that "cleanliness is next to godliness" would be a most wholesome motto for the electric light business. Dirt begets dirt, and with electrical apparatus it is by far the most fruitful source of short circuits, grounds, and consequently of burned armatures and disordered apparatus generally. Let us then so arrange our station that that most fruitful source of dirt, our boiler-house, may give us as little trouble as possible. Putting the boilers in the cellar and the engines and dynamos on the floor above is probably the worst possible arrangement next to putting all in the same room, since every opening in the floor conveys a blast of hot air, laden with coal dust and ashes. The correct method is to separate boiler and engine rooms by a fire wall and make the only opening between through a room or passage through which a strong draft of air is always passing. This we effect at Troy by means of an air shaft 6x8 feet, which also serves as a wire tower and in which wash-sinks, etc., are also constructed. The doors leading in both directions are kept shut by heavy springs, and when opened the strong draft carries all dust, smells, etc., up the chimney. This shaft is carried above the roof and the wires are carried out between the louvres of the blinds. One thing do not forget. Arrange a cellar or basement under your dynamo and engine room floor about six feet deep. You will find it infinitely convenient in connecting small pipes, etc., to the under side of the floor.

Make your dynamo room not less than ten feet high for the comfort of your men, and arrange the windows to open clear up to the ceiling, as that is where the hot air will go to escape. You may also put your windows six feet above the floor and you will save annoyance from spectators, and your men will not have so much looking to do.

The boiler house should be light in construction, having an iron roof with some outside covering, such as asphalt, to prevent sweating in cold weather. The boiler fronts should, of course, face either on an open lot or a street to facilitate handling boilers, and for the same reason the front of the boiler house should be easily removable. The floor should be of concrete not less than a foot in thickness, made of the best Portland cement, mixed about 1 part cement, 3 parts sharp sand, 3 parts stone, broken to pass 1½ inch ring.

On this may be laid a floor of flags or arch brick laid on edge. No floor of cement or of ordinary brick will stand wear.

Going back to our main building, I will follow more particularly the line of work adopted at Troy. Our lot measures 50 by 130 feet, and the problem was to develop on that space a station of a maximum capacity of 500 h. p. effective.

The lot was occupied by a mere shed covering two 80 h. p. boilers located almost exactly in the middle of the lot; one 150 h. p. compound engine just beside the boiler, belted to 48 feet of jack shaft lying parallel with the length of lot, and two feet six above the floor, the dynamos

Digitized by Google

lying each side of the shaft, the pull of the belts being nearly balanced.

The new station was laid out in a dynamo room 50 by 90, and boiler house 40 by 50 feet, arranged for a battery of four boilers 72 inches by 17 feet, stack 13 feet square at ground and 125 feet above the grates; wire tower in corner between dynamo room and boiler house, projecting into the latter. As originally laid out, the engine stood in the new dynamo room close beside the fire wall, now separating engine and boiler rooms, and the boilers further out in the dynamo room. It was decided to build the unoccupied end of the dynamo room, put in engine power connected with the old boiler, shift the station, abandon the old engine temporarily, build the rest of the new station over the old, put in new boilers, then connect them and disconnect the old boilers, remove the old boilers, and finish the inside of the building. The company changed hands on May 23, 1885, and on September 1st the old station was shut down at midnight, and the dynamos shifted to the finished part of the new building, and at six the following evening the station was in full operation in its new quarters. The plant then comprised about 600 Weston incandescent lights and some 20 arc lights. The remainder of the work was merely a question of time, and the station was first operated on its new boilers on December 17, 1885. At the same time about 15 miles of pole lines were constructed, and some thirty miles of wire strung for the city contract of 130 lights.

The general construction of the Troy station is believed to cover the average conditions met with in central station construction, and is therefore particularized. In the arrangement of dynamos and engines we desired to attain the best economical results in the following items:

1st. Best average economy in coal.

2d. Best average economy in transmission of power to its work.

3d. Best economy of attendance.

4th. Best economy of oil, waste, etc. Our customers required a day service, and we had to take this into account in our selection of engines for power, and in their arrangement.

These conditions were to be borne in mind in the selection of our engines, and, in addition, the most important condition of reliability. Compound engines offered us the best coal economy, with maximum load, but had the disadvantage of poor economy with light loads. Corliss engines would occupy too much room, and both required shafting and counters to speed up, and would have forced us to use the second floor for dynamos, with the attending disadvantages of extra help and upright belting. We finally decided on using the best type of high speed engines, and purchased three engines of 9x14 cylinder, each belted to a jack-shaft 16 feet long, and each driving four 110-light incandescent dynamos, belted in pairs from opposite side of the shaft. The lengths were arranged to be coupled by friction clutches. This arrangement gave us a very uniform rate of coal economy, though not a very high one. The arrangement of belting made the shaft friction very small. The old compound was set to work on its proper duty of driving a fixed load of city lights.

The relative merits of compound, Corliss, or high speed engines are well understood, and the circumstances must in every case decide the type of engine proper to be used.

Where the maximum of output is required from a small space, high speed becomes a necessity. Where the load is very variable a number of smaller engines will give as good average coal economy as a single larger engine, with less chance of a complete failure. Where the load is heavy and constant, a pair of large engines will give the best economical results and at the same time cover the possibility of a complete breakdown. The new triple expansion engines, which are rapidly replacing all others in ocean and lake steamers on account of their wonderful coal economy, will probably displace all others in the field.

Condensing high speed engines have not met with much favor, but we find at Troy that our "Straight-Line" engines work quite as quietly under 28 inches vacuum as without, and that the coal economy is considerably improved; probably from 15 to 20 per cent. on the engines condensed. They have also the advantage of giving us much more power for cases of emergency.

As to boilers, I am strongly in favor of boilers of large size; ours measure 60″x17 feet, and are of Nashua "Indian head" steel, $\frac{7}{16}$ shell, $\frac{1}{2}$-inch head, and have 136 3-inch tubes. The dimensions of the tubes 3″x17 feet would be out of all proportions for ordinary drafts, but our stack 125 feet above the grates gives us ample draft and the small tubes a great evaporating surface, and consequently a better evaporation. I am afraid I shall be considered a little unsound of mind when I state that with these boilers we are able, and do, evaporate with a mixture of one part bituminous to two of yard pea and dust, nine pounds of water per pound of coal, and with ordinary buck-wheat coal ten pounds of coal, feed water at 200 degrees. But such is the case, as I shall be happy to show any one visiting us. This is not pounds of combustible, but of coal. I have always found the ashes to cost just as much per ton as the fuel part of the coal, and therefore consider that they have no place in the relation of evaporation per dollar. We keep a daily and nightly record of our evaporation by a Worthington meter, which is on the boiler feed, and let me say that the bad reputation for veracity of meters in general will not apply to our meter, as repeated tests show a nearly constant error of 2 per cent. low. I may further say that our meter, though a Worthington, has no connection with the *Electrical Review*. I merely state this to protect the meter from undue suspicion. (Laughter.)

For boiler feeds provide a reliable injector in addition to feed pump, which latter should always be used in connection with a good heater. An extra feed pump may be connected as a fire pump, and should be used regularly for some such service as washing out boilers, to ensure its being in good order.

Attention to surface and bottom flues is, of course, a daily duty.

As to fittings use some one kind of valve; get a good kind and stick to it. Price should have no place in the first choice of valves. Get a good one with removable seats and discs and you will save a world of trouble and a deal —not an electric light deal—of money in a few years time. Let me remark that everything we have in bottom blow-offs has failed, except plain plug valves. The failure seems to come from scale, which will stick under the gates and seats, and bend them out of shape when closed. An extra large valve in the blow-off discharge is desirable in case of a failure of a blow-off valve.

In piping of all kinds discard elbows and use only T's, you will frequently save taking down an entire line of pipe to make some connection by so doing, and the T's are most convenient for examining and cleaning the pipes. You should also obtain all your fittings and pipe of one party to ensure good fits. Threading tools are seldom alike and a small variation will give endless trouble with leaks.

Cover all steam pipes, and remember in choosing a covering that it is not the material which you cover with, which makes the non-conductors, but the confined air spaces in the same. Get air spaces and get them so arranged that the air cannot circulate between hot and cold surfaces. Remember also that you can tell nothing by the feeling of the outside of a covering about its effectiveness. Sensations of heat and cold are intensified by the conducting capacity of the object touched. A piece of metal attached to a steam covering till hot will convince you of this. It can be no warmer than the covering, but it feels so.

In touching on the electrical apparatus I feel that I am treading on delicate ground, and I shall try and step

Digitized by Google

accordingly. The principal elements of ordinary wear in dynamos are

1, Burned coils in the armature; 2, wear of brushes; 3, wear of commutator; 4, wear of boxes or journals.

In regard to burned armatures I will say that judgment should be exercised in the choice of a system as to the liability of such an accident, and this being determined choose a machine whose armature is most readily repaired. Gramme and similar ring armatures are probably the most easily repaired. Siemen armatures and all armatures with lapped coils must go to the factory for a good job.

As to brushes, the cheapest by far both in first cost and wear, are the single leaf, split brush. Multiple brushes are usually used in commutators with many segments, and there seems to be some relation between the number of segments and wear of brushes.

Commutators of many segments are less desirable than those of few. The segments can usually only be changed by putting on a new commutator and they seldom wear true. The segments on commutators of fewer bars are usually arranged to be easily removed and can then be turned up and replaced.

Plain babbitted boxes or bronze bushings are about on a par for convenience in renewal. Bronze has the advantage of not being liable to melt out and cause a shut down, and a little patience will almost always succeed in cooling them down. For belting probably nothing is better than double pasted leather belts if well made. For large belts a few rivets must be put in.

Arc lamps should be devoid of glycerine, and not easily shaken out of adjustment. The lighter and smaller lamps are, the better for handling. Arrange all inside wiring of some first-class high insulation wire, especially on high tension circuits.

In the Keystone station in Philadelphia I first saw oil conducted to each machine oiler and cylinder cup in pipes. I heartily approve this system as a saving both of oil and waste.

In conclusion, I will suggest two rules to govern central station construction.

1. Expend every dollar which will return 10 per cent. on its investment in addition to maintaining itself, including, of course, interest, taxes and wear and tear.

2. After carefully investigating, estimating and planning out the capacity of your station, make a large guess as to what you require, and multiply by two.

DYNAMIC ELECTRICITY.

BY CARL HERING.

(Continued from page 187.)

CHAPTER VIII.—FIELD MAGNET COILS.

ALTHOUGH methods have been suggested for calculating directly the size of the wire and the number of turns in field magnet coils, from the magnetism required, yet until such methods have stood the severe test of repeated application in practice, they must be regarded merely as suggestions which may or may not be more trustworthy than the methods already in use. It can hardly be expected that any new methods based on calculations only, will ever prove to be more reliable and sure than the well tested method to be described and which is based on the actual performance of the machine.

There are a number of factors which enter into such calculations, which are either unknown or uncertain, and which will, therefore, make the results less reliable. Until these quantities are known any determination of the coils based merely on calculations without testing the machine, will be approximate only. Among these uncertain or unknown quantities are the magnetic qualities of the particular iron used, the effect of the shape of the magnetic parts, the air space in the magnetic circuit, the magnetic leakage, the resistance equivalent of the self-induction of the armature and field magnet coils, the effect of the number of pulsations or of armature coils, the Foucault currents in the armature coils and in the pole pieces, the counter magnetism in the armature commonly called the magnetic lag. It is known, however, that under certain conditions, easily obtainable in practice, the effect of a number of these quantities or proportions is so small that it may be neglected. The effects of some may be eliminated by taking as a basis of the calculations the known results of a similar machine of the same general type and proportions, though not necessarily of the same actual size. Recent investigations[1] in apparently the right direction, may however lead to the determination of certain reliable constants and relations which will materially aid the engineer in calculating more definitely the relations between the exciting coils and the field, without first constructing a number of trial machines.

As described before, it is the electromotive-force which the machine generates and maintains, the current being dependent only on this and on the total resistance in circuit. This electromotive-force depends on the armature, on its speed and on the magnetism, which latter depends on the iron parts and on the ampere-turns. Therefore, if the armature and frame have been constructed as described, and the safe speed determined upon, the only other factor which remains undetermined and which may be made to correct any small errors or inaccuracies in the determination of the armature and frame, is the winding of the coils.

This may be determined with all due accuracy by the following method: When the machine is completed in all its parts except its coils, erect it and place on the magnet cores temporary coils of a known number of turns. These coils should all have the same number of turns; the size of the wire will depend on the electromotive-force and current of the separate exciting machine or battery which must be used to supply them with current; it should be large if the exciter gives a strong current of low electromotive-force, and small if it gives a small current of high electromotive-force. They may be wound on shells of brass or ordinary tinned iron, and should have a depth of winding about equal to that which the final coils should have, in order that the inaccuracies due to different thicknesses of coils may be eliminated.

The machine is then run at its proper speed as a separately excited machine, the current for the coils being supplied by a separate dynamo or by a storage battery, which must be so arranged with adjustable resistances or other regulating devices, that the current in the coils may be varied at will. The current from the machine is discharged into a large rheostat, or in the absence of such a resistance it may be sent into a battery of storage cells or into a circuit of incandescent or arc lamps, though the latter is not to be recommended, as the arc lamps make the current too unsteady. The exciting current is then varied and adjusted until the machine gives its proper potential when the current has the required strength, the brushes having first been set to the proper position to avoid sparking. When all the adjustments have been made and the current and potential measured to see that they have their desired values, the current which flows through the exciting coils should be measured as accurately as possible. This exciting current is then multiplied by the total number of turns in the temporary field coils, which gives the number of ampere-turns that are required to excite the magnets of the machine while it is generating its proper potential and delivering the proper current. From this number of ampere-turns the proper size of the wire and number of turns for the new coils of the machine can readily be determined, as will be described. The magnetism of a core depending only on the ampere-turns, it is immaterial whether these are generated by many windings with a small current as in shunt machines, or by few windings with a strong current

1. Proceedings of the Society of Telegraph Engineers, November 11, 1886. Kapp on characteristics of dynamos.

Digitized by Google

as in series machines, or by a combination of both as in compound machines; all that is necessary is that the total products of the current and number of turns of wire be the same.

The following precautions should be taken in making this preliminary test for determining the ampere-turns:—The temporary coils of the machine when separately excited should be connected in series with one another, for if they are in multiple arc an error may arise from a possible unequal distribution of the exciting current in the different coils due to different resistances. In the absence of an exciting machine or battery the temporary coils may be supplied with current from the machine which is being tested; they may then be wound with tolerably fine wire and have an adjustable resistance in series with them, the connections being made like those for a shunt machine, the shunted current being added to the main current as part of it. Or the temporary coils may be wound with coarse wire and connected as in a series machine, the adjustable resistance being in that case connected as a shunt to the coils, and the potential of the machine being measured at the brushes and not at the poles, as some of the potential is used in the coils.

If the finished machine is to be a series wound machine a portion of the potential of the armature is consumed in sending the current through the magnets. This may be as low as 1.5 or 2% of the whole potential in large well built machines, and as high as from 15 to 20% in smaller cheaper machines; it represents the percentage of energy required in the magnets. In the preliminary test for determining the ampere-turns this should be taken into account, the exciting current being increased until the potential of the machine is that which will be required for the magnets in addition to that required for the external circuit. If the finished machine is to be shunt wound, a fractional part of the whole current generated will be required for the magnets; this varies from 1.5 to 2% of the whole current in large well built machines, and is as high as 15 to 20% in small or cheap machines. In the test for the ampere-turns the machine should therefore be excited until the current is equal to the sums of the main current and this shunted current. In compound machines both of these corrections should be made, the whole percentage of energy being divided between the two sets of coils according to their functions. For instance if 3% be allowed for the magnets, $\frac{1}{3}$ of this or 1% of the potential might be allowed for the series coils, and $\frac{2}{3}$ or 2% of the current for the shunt coils.

The magnets should not be over-saturated except when it is desired to "steady" the current by having the magnets less sensitive to changes of current in their coils. This applies, of course, only to self excited machines; in those in which the magnets are separately excited, as in some central station plants, or as in most alternating current machines, there is apparently no reason for over-saturation. Well built compound machines should never be over-saturated, nor even too near the point at which saturation appears to be complete, as it is then difficult, if at all possible, to wind them compound for a constant potential. How to determine, before winding the magnets, whether they are over-saturated by the required magnetism, will be set forth in a subsequent chapter on examining machines.

SEPARATELY EXCITED MACHINES.

If the finished machine is intended to have its magnets energized by the current from a separate machine the calculation of its winding becomes very simple. Suppose the preliminary test with temporary coils, just described, showed that 20 amperes were required, and that there were 250 turns or windings on each coil, the type of magnet frame being that shown in figure 26, chapter VII., in which there are four coils; there will then be $4 \times 250 = 1{,}000$ turns, which with 20 amperes gives a total of 20,000 ampere-turns as a measure of the magnetism required. The number of ampere-turns or ampere windings thus determined will hereafter be represented by $(a\,W)$.

To determine the winding for the finished machine assume any suitable current and divide this number of ampere-turns by it; this will give the required number of windings or turns of wire, which again divided by the number of coils gives the windings per coil. Any suitably sized wire may then be chosen, which when wound to the required number of turns will not make the coil too large, a good practical guide for which is to make the depth of the coil about $\frac{1}{8}$ the diameter of the core when round, or $\frac{1}{8}$ of the lesser diameter when oval. A more direct method of finding the proper size of the wire is to divide the area of cross-section of the coil space in square inches (that is the length of the coil multiplied by the depth or thickness) by the number of turns of that coil; this will give approximately the space for each wire, the square root of which is the diameter of the insulated wire in inches.

The current for such magnets should be chosen with reference to the cost of the wire for the coils, the cost of winding it, and the length of the leads from the exciting machine. Considering the cost of the wire only, the current should evidently be as strong as possible and the potential correspondingly low, in order to increase the size of the wire as much as possible, as coarse wire is cheaper per pound than fine wire, and it may be assumed that the weight of coils having the same cross-section of coil space is nearly the same whether coarse or fine wire is used. Considering the cost of winding, however, a limit is soon reached. Although it costs less to wind fewer turns of coarser wire than many turns of fine wire, the cost again increases when the wire becomes so thick as to be unmanageable. Considering both of these factors the wire should be chosen as large as it is easy and cheap to wind. If the exciter is at a great distance from the machine the additional cost of the leads, for a strong current, may necessitate taking a smaller current, and, therefore, more turns of finer wire on the magnets; but this case would probably occur seldom, if ever, as the exciting machine is generally near the other.

In some cases it may be preferable to reverse this method and to determine first the largest wire which it is practicable to use, then find how many turns can be wound into the given coil space, and finally by dividing this number of windings into the number of ampere-turns per coil, find what the current must be.

The case may occur when the magnets must be wound to suit a certain exciter giving a definite current and electromotive force. The current for the magnets being fixed, the number of windings are determined by dividing it into the ampere-turns $(a\,W)$. The size of the wire must then be chosen so that when wound to the required number of turns its resistance is such that the potential required is within the limits of the capacity of the exciter. In other words, if C and E are the available current and potential of the exciter, the resistance of the coils must not be greater than $R = \frac{E}{C}$. On account of the self-induction of the coils, the heating, a possible slight error in the diameter of the wire, or other factors increasing the apparent resistance, it should not be as large as $\frac{E}{C}$, but should contain a "factor of safety" by making it, say 15 to 20% less.

The size of the wire could be determined by trial by calculating the resistance of the required number of turns with different sized wires, but the following method will be found to be more direct.

Let d, represent the diameter of the bare wire in mils or thousandths of an inch;
l_m, the average length of one turn in inches;
R, the resistance of all the magnet coils in legal ohms;
W, the total number of turns on the magnet coils of the finished machine;
a, the current in amperes in the magnet coils of the finished machine;

Digitized by Google

($a W$), the ampere-turns obtained from the preliminary test;

θ, the specific resistance (metric) at the allowable temperature of the coils.

The resistance of the finished coils will then be

$$R = 50.13 \frac{W l_m \theta}{d^2}$$

and according to Ohm's law,

$$R = \frac{v}{a}$$

in which v is the potential in volts which is consumed in the coils. Hence it follows that

$$d = \sqrt{\frac{50.13 (a W) l_m \theta}{v}}$$

or assuming θ equal to .0162 and the temperature about 70° F,

$$d = \sqrt{\frac{.875 (a W) l_m}{v}}$$

in which it is only necessary to substitute the particular values, and reduce it, to find the diameter directly. v should in this case be 15 to 20% less than that which the exciter will give, in order to include the factor of safety above refered to.

(*To be continued.*)

NOTE ON THE PERFORMANCE OF SOME DYNAMOS.

BY D. C. JACKSON.

As there were several errors in the table published in the ELECTRICIAN AND ELECTRICAL ENGINEER, for April, under the above caption, it has been thought well to republish it.

TYPE OF ARMATURE.	MACHINE.	REVOLUTIONS PER MINUTE.	VELOCITIES.	I.	II.	III.	E. M. F.	CURRENT.	AUTHORITY.
Siemens	Edison-Hopkinson.	800	2100	.45	.013	.00060	110	300	Kapp & Crompton.
"	Edison.	1750	2850	.312	.0065	.00018	125	40	
"	Weston.	1000	1850	.234	.0077	.00024	150	20	Prof. Anthony.
"	Mather.	2750	3200	.520	.0098	.00020	125	40	
"	Wenström.	460	2225	.229	.0062	.00050	110	190	La Lumière Électrique.
"	2½ inch.	3000	1875	.182	.0060	.00006	70		Prof. Anthony.
Gramme	Manchester (Mather & Platt).	1050	3300	.402	.0075	.00038	110	220	Kapp & Crompton.
"	Crompton.	400	1620	.230	.0085	.00057	600	120	*Electrician*, London.
"	" (Plating).	700	2840	.336	.0070	.00048	110	490	"
"	Crompton.				.0095		110	217	Crompton.
"	"				.0070		110	100	"
"	"				.0055		60	33	"
"	Elwell-Parker.				.0080		110	460	"
"	" (4 pole).				.0065				Kapp.
"	" (2 pole).				.0045				"
"	Kapp.				.0070		110	125	Kapp & Crompton.
"	Goolden-Trotter.	800	3000	.378	.0075	.00047	130	200	Ravenshaw.
"	" "	765	2140	.264	.0074	.00034	56	285	"
"	" "	950	2850	.289	.0061	.00030	60	200	"
"	Sperry (Internal pole pieces).	750	3150	.226	.0043	.00030	850	23	
"	Old Gramme.	1000	2875	.109	.0023	.00011	200	25	Prof. Anthony.
"	Raffard-Breguet.	1400	2950	.115	.0022	.00008	110	35	Crompton.
"	Ball (" Unipolar ").	1380	3800	.132	.0016	.00010	470	8	ELECTRICIAN AND ELECTRICAL ENGINEER, N. Y.
"	"	1180		.113		.00010	710	8.2	"
"	Deprez (Paris Creil).	216	1475	.081	.0033	.00037	3000	9.9	Levy & Kapp.
Pacinotti	Phoenix.			.290	.0058	.0006	110	380	Kapp & Crompton.
Brush	Brush.	850	4670	.200	.0026	.00024	3000	9.5	
Thomson-Houston	Arc.				.0019		2000?	10?	Kapp.
"	"	900	3770	.111	.0018	.00012	700	10	
"	Incandescent.	1250	4335	.364	.0051	.00029	80	200	
Gramme	Van Depoele. (60 h. p. transmission of power.)	800	4300	.238	.0020	.00017	550	60	

The writer well recognizes, that it is unfair to use such a table in estimating the comparative value of dynamos. The figures are interesting as they show the excellent results in activity of copper attained by several of the best known makers under the most diverse conditions. A few of the examples illustrate the difficulty of discovering a thoroughly impracticable design for a dynamo.

To complete the comparison there might be added the special use for which each machine was designed. This can be inferred in most cases from the E. M. F. and current. The use to which a dynamo is to be put must have much influence on the amount of wire on the armature, this being especially noticeable in arc light dynamos where it is best to sacrifice activity of wire and efficiency to gain greater stability in the lights.

The columns in the table have the same signification as in the previous table: i., ii. and iii., contain respectively volts per foot of wire, volts per foot of wire and per foot per recorded periphery velocity, and volts per foot of wire and per revolution. The headings of the other columns are self-explanatory.

I have availed myself of the note of Mr. H. Ravenshaw, in the *Electrical Review*, London, of April 29th, in respect to the figures of the Goolden-Trotter machines. Figures for several other machines have been added to the original table.

PHYSICAL LABORATORY, CORNELL UNIVERSITY, Ithaca, N. Y., May 17th, 1887.

ON THE DIFFERING TEMPERATURE CO-EFFICIENTS OF THE DIFFERENT COILS OF A FINE RHEOSTAT.[1]

BY PROF. W. A. ANTHONY.

THE title of this paper should rather have been "A Description of Experiments by which the Differing Temperature Co-efficients of the Coils of a Fine Rheostat were Discovered." I thought the experiments of sufficient interest to warrant a description, and I find, on writing the paper, that the experiments occupy the greater part of it.

In 1884 the Cornell University ordered of Latimer Clark, Muirhead & Co., of London, a fine rheostat and bridge of special construction. Among other things it was specified that the resistances of the coils of both bridge and rheostat

1. Read before the American Institute of Electrical Engineers, May 18, 1887.

Digitized by Google

should check among themselves to 1-100th of one per cent., and that everything should be done to make the instrument as accurate and reliable as it was possible for such an instrument to be. On its arrival it was found not to fulfill the requirements as regards accuracy, the coils differing among themselves in many cases by more than 1-10th of one per cent. It was returned to the makers for readjustment and did not come back to the university for several months. On its return it was found that the adjustments had been much improved, but still did not come within 1-100th of one per cent. It was, however, finally accepted at a reduced price, the writer proposing himself to perfect the adjustment. Press of other work prevented this being done, and, last November, when a problem requiring the highest attainable accuracy in the comparison of two resistances presented itself for solution, this rheostat was used for making the comparison, it being proposed to afterward determine and apply the corrections for the errors of the individual coils.

The problem was, to find by experiment the ratio of the constants of the suspended and stationary coils of the large galvanometer, a description of which has already been read before the Institute. The constants of these coils were determined by measurement while they were being wound and the experimental determination of the ratio was undertaken as a check on the measurements. To determine this ratio, a current is made to divide between the stationary coils on the one hand, and the suspended coil on the other, but in the reverse direction, so that the two currents shall have a differential effect on the needle. The resistances are then adjusted till the needle is unaffected when the current in both branches is reversed. The constants of the coils in the two branches are then directly proportional to the currents flowing, and, therefore, inversely proportional to the resistances of the two circuits.

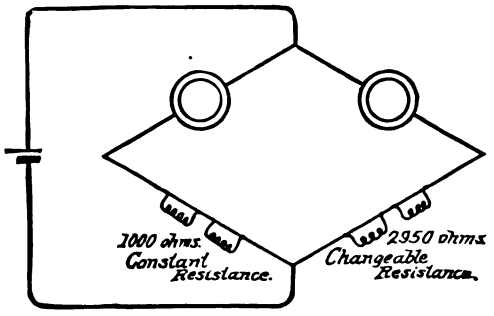

FIGURE 1.

To obtain the ratio of these resistances, they were arranged as two branches of a Wheastone's bridge, as shown in figure 1, the other two branches being made up from the rheostat referred to above. The apparatus was arranged and the tests made by Mr. Ryan, a senior in electrical engineering, and Mr. Hammon, a graduate student of electrical science.

The first trials showed that nothing could be done with binding screw connections and sliding contacts. All permanent connections were therefore soldered, and all others made with mercury. After this was done, irregularities still existed which were traced to varying temperatures, resulting from the fact that the building in which the galvanometer is mounted is of wood and warmed by a wood fire in an "air-tight" stove. The fire was allowed to go out, and the work continued at the temperature existing outside, about zero centigrade. Times for the experiments were chosen when the temperature was quite uniform, and the results were found to agree very well among themselves, but, to our surprise, they were totally different from the results obtained at the higher temperatures. The following table will show how the results ran:

Room warmed.		No fire in room.	
Temp.	Ratio,	Temp.	Ratio.
21.4	2.9520	Dec. 7 1.7	2.9492
21.3	2.9523	1.7	2.9492
20.8	2.9529	1.8	2.9492
20.3	2.9524	1.6	2.9492
20.2	2,9526	Dec. 8 3.7	2.9495
20.2	2.9528	3.8	2.9498
19.1	2.9529	3.8	2.9497
		3.8	2.9497
		etc.	etc.

Here is a difference of one-tenth per cent. for a change of temperature of about 20° centigrade. It should have been stated that the ratios above are the ratios of the two resistances as read from the rheostat; that one of the resistances was always 1,000, and of the other, which was nearly 3,000, only the units and tenths coils were changed.

A study of the construction of the galvanometer, and a discussion of the effects of temperature upon it, made it clear that the change indicated above could not be a real change in the ratio of the constants of the coils. It must, therefore, be looked for in the rheostat. To test this conclusion, different sets of rheostat coils were used in making up the arms of the balance, and tried at high and low temperatures. In one case the ratio was apparently larger at the lower temperature, the reverse of the result shown in the tables above. But the crucial test was suggested and tried by Mr. Ryan. He took the rheostat out of doors and then subjected the galvanometer and all accessory apparatus, except the rheostat, to changes of temperature. The rheostat then indicated the same apparent ratio for all temperatures of the galvanometer.

It is certain, therefore, that a change of temperature of 20° causes a change in the relative resistances of two sets of coils in this rheostat to the extent of 1-10th of one per cent., that is, the temperature co-efficients of the different coils are not the same, and it is, therefore, no wonder that the makers could not adjust the resistances more accurately. Such differences of temperature co-efficients might well occur if the wire of which the coils are wound was taken haphazard from different lots, made, perhaps, from different lots of metal. If makers of fine instruments are not careful to select wire that is sure to be of one composition for the construction of resistance coils, it is no wonder that it is so difficult to attain to a high standard of accuracy in electrical measurements.

But there is another possible explanation for the differences found in this instrument. The low resistances are of coarse wire, and this, from different temper or from different treatment in drawing, might not have the same co-efficient, although made from the same metal, as the fine wire. In short, I believe that, for the construction of an accurate rheostat, the coils should not only be from the same lot of metal, but should all be drawn to the same size and subjected to the same treatment while being drawn. The wire chosen should be fine enough for the coils of highest resistance, and coils of low resistance should be made by winding two or more of the same wires in multiple arc.

THE RELATION BETWEEN THE CROSS-SECTION OF THE IRON IN ARMATURE AND FIELD OF THE GRAMME DYNAMO.[1]

BY DUGALD C. JACKSON.

THE relation between the cross-section of iron in the armature core to that in the magnet limbs in a dynamo machine is an important one. On its proper adjustment, in an otherwise well-designed machine, depends the attainment of maximum efficient output per pound of wire with minimum of iron. Of two machines designed for a given purpose, the one with a Siemens armature and the other with a Gramme ring, the path of the lines of force through

1. Read before the American Institute of Electrical Engineers, May 18, 1887.

Digitized by Google

the armature of the latter machine will usually be considerably longer than in that of the other. It is evident that special care should be exercised to make the Gramme armature of sufficient area of cross-section that its magnetic resistance be not increased unduly. Siemens armatures from mechanical principles call for a goodly amount of iron, while an increase of cross-section in a Gramme armature increases mechanical difficulties considerably. Consequently, Gramme armatures usually have considerably smaller cross-section than Siemens armatures in machines intended for a similar use, magnetic conductivity being sacrificed for mechanical convenience in the Gramme. How far this sacrifice may be carried without impairing the value of the machine must of necessity be specially determined for each individual case.

The question of how far the characteristic, and so the output of a machine is influenced by variations in the cross-section of the armature could be determined by the Hopkinsons' very beautiful method of predetermining characteristics. In a machine, the outline and dimensions of which are determined by conditions imposed, the curves of magnetization, such as Dr. Hopkinson used, would be fixed for the field and air space. By plotting curves for armatures of various cross-section, the area giving the best characteristic, and yet not unduly decreasing the internal diameter of the ring, would be evident. The value of the leakage ratio, v, might be estimated by Prof. George Forbes's method, if the shape of the diagrams were not too complicated.

An experimental solution of the problem for a little dynamo was made this term in the physical laboratory at Cornell University. If we had armatures for one dynamo made with cores of various cross sections, the best section would be apparent from the characteristics. However, it is not necessary to wind the armatures, but simply to measure the number of lines of force passing through the armature for various magnetizing forces—that is, observing the data for a curve of magnetization. This may be done in several ways.

In the experiment referred to, a single turn of wire was placed around the section of the armature core perpendicular to the direction of the lines of force. This was connected with a ballistic galvanometer. The swing of the needle of the galvanometer was observed when the current was reversed in the magnetizing coils on the field. The swing was thus proportional to 2 H A, A being the area of the turn of wire, and H the induction per unit area. Knowing the magnetizing current and the corresponding swing for a number of points for each of several different armatures, the corresponding curve of magnetization may be plotted. These curves are exactly similar to the total characteristic of a series dynamo or the internal characteristic of a shunt machine.

The field of the little dynamo experimented upon is of the single horseshoe type standing upon the yoke. This is rectangular in cross-section. The limbs are cylindrical and are held in place on the yoke with two pins each, the contact surfaces being perfectly plane. The yoke and limbs are of the best Norway iron. The pole pieces are of a very good quality of cast-iron and are chambered to fit the upper ends of the limbs, which enter for a length of 7 cm., making the area of contact considerably greater than the cross-section of the limbs. The cross-section of the pole pieces is much greater than that of the limbs. The bore of the pole pieces is 10.8 cm. in diameter, there being a gap at the top and bottom subtending an angle at the centre of the bore of 51°. The width of the surfaces on either side of the gap is .3 cm. The corners of the pole pieces are all rounded off.

Following are the dimensions:

Limbs (cylindrical)	
Length	20.3 cm.
Diameter	6.35 "
Area of cross-section	31.66 sq. cm.
Distance apart from centre to centre	17.9 cm.
Yoke (rectangular).	
Length	26.8 cm.
Width	8.2 "
Depth	6.9 "
Area of cross-section	56.6 sq. cm.
Pole pieces	
Height	10.2 cm.
Width	10.2 "
Bore	10.8 "
Mean area of cross-section	—sq. cm.

The magnetizing coils consist of 785 turns on each limb, making a total of 1,570 turns.

The armatures were composed of thin punched discs of soft wrought-iron, obtained through the courtesy of Thos. Pray, Jr., of Hartford, Conn. The discs were insulated by dipping them into shellac varnish, and then built into armatures by placing them on wooden mandrels turned to fit their internal diameter. The variation in the cross-section of the armatures was obtained chiefly by using armatures of the same number of discs, but of different internal diameters. As it was not possible to secure discs with the proper internal diameters to give all the area desired, some of the armatures were composed of fewer discs. In these, thin spaces were left between the discs and the area inclosed by the exploring coil was slightly greater than that of the iron. The effect of this has been neglected as too small to be appreciable. The areas were obtained by multiplying the thickness of the discs, which was .0462 c.m., by the number on the armature.

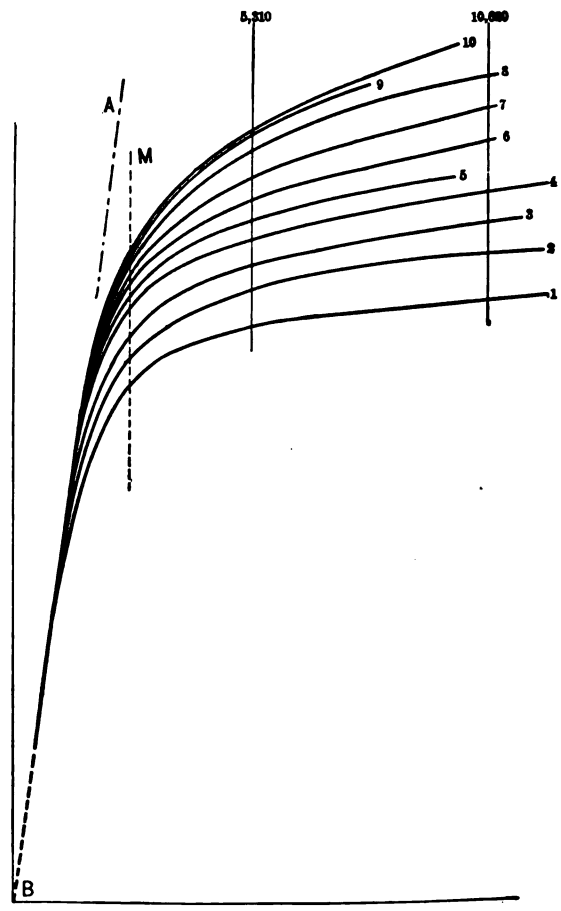

FIGURE 1.

The magnetizing current was furnished by a number of storage cells. In the circuit of these were placed a tangent galvanometer and the magnetizing coils. A reversing key was so placed in the circuit as to simultaneously reverse the current in the galvanometer and coils. The magnetic induction was measured by a ballistic galvanometer, as already explained. The observations were

Digitized by Google

taken by Mr. F. R. Jones, an engineering student working in the laboratory. The regularity of the curves attest the care with which he carried out the work. I have here a rough sketch of the curves determined by Mr. Jones, which, I think you will agree with me, are very interesting.

The following, in figure 1, are the areas of the cross-section of the armatures and their ratios to the cross-section of the magnet limbs:

Armature	No.	1	17.75	cm		Ratio	0.561
"	"	2	19.23	"		"	0.607
"	"	3	20.70	"		"	0.654
"	"	4	22.19	"		"	0.701
"	"	5	23.66	"		"	0.747
"	"	6	25.14	"		"	0.794
"	"	7	27.36	"		"	0.864
"	"	8	29.18	"		"	0.922
"	"	9	34.49	"		"	1.09
"	"	10	42.44	"		"	1.34

In curve No. 1, where the armature has little more than half the area of the limb, the turn in the characteristic is sharp and the straight line representing the upper portion of the curve is almost horizontal. The rapid great increase of magnetic resistance shown by the curve to the right of the line M must be due entirely to the saturation of the armature. As the area of the armature increases the turn in the corresponding characteristics grows into a longer sweep and the upper part of the curve takes an increasing angle with the horizontal. Curves Nos. 9 and 10 are given by armatures greater in cross-section than the limb, and though there is a difference in their areas equal to a quarter of the area of the limbs, there is very little difference in the total induction passing through the armature. The curve No. 10 then very probably nearly represents the curve of magnetization of the iron in the field and the air space. The straight line which constitutes the lower part of the characteristic, being the backbone of the curve, as it were, must very nearly represent the line of magnetic resistance of the air space. By air space I mean the space between the pole-piece and armature.

Looking at the curves, you see the armature No. 1 was highly saturated, or, in other words, had become of enormous magnetic resistance before the permeability of the field began to decrease appreciably. On the other hand, armature No. 9 has increased in magnetic resistance very little up to the point to which the characteristic has been carried, while the field is quite saturated. Between these extremes there are varying degrees of relative saturation of the armature. In curve No. 7, the field and

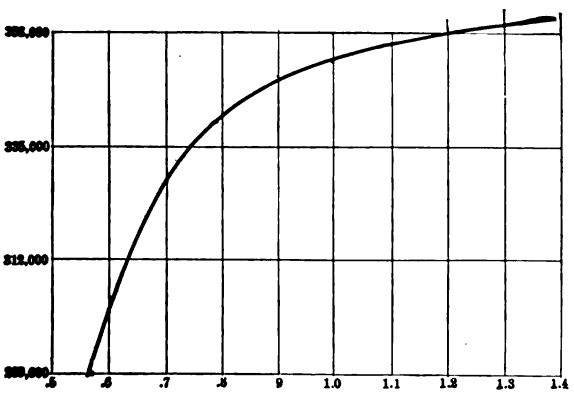

FIGURE 2.

armature are apparently at about equal degrees of saturation throughout. The curve shown in figure 2 illustrates the effect on the total induction through the armature of the ratio of the area of the armature to that of the limbs. As ordinates are plotted total induction through the armatures taken from the characteristics on the section line M. The abscissas are ratios of the cross-section of the armature to that of the limbs.

This curve is exaggerated in vertical scale so that its character may be more plainly seen. It shows obviously that the induction through the armature increased quite rapidly when the armature core was increased in area from .5 of that of the magnet limbs to about .75 that of the limbs. From .75 to .9 there is still an increase of induction with increase of armature core, though not so good as before, and beyond .9 the increase is of no practical importance.

If the section M, figure 1, had been taken farther up the curves, the relative increase of total induction with increase in the area of the larger armature would not have been so marked.

The section M is taken at 2,660 ampere-turns; that is, an absolute magnetizing force of 33,420. The absolute total induction for this magneto-motive force are shown in the curve, figure 2. These were determined by comparing the throw of the ballistic galvanometer given by the armature with that given by a standard coil turned through 180 degrees in the horizontal component of the earth's field. The value of the horizontal component at the place of the standard coil was determined by comparison with that in our magnetic observatory by the use of the compensated magnetometer.

We may safely assume that the cross-section of the armature should be about .75 of the cross-section of the limbs if the wire on the armature is to have the greatest activity without an excessive quantity of iron in the core. By making the cross-section of the armature .6 of that of the limbs, a loss of 10 per cent. of the total induction when the ratio is .75, would be made, and consequently an equal loss in E. M. F. and the output of the machine. This is a case where the permeability of the field magnet is equal, or very nearly equal, to that of the armature. If the permeability of the armature core were greater than that of the field, the area of armature could be a smaller ratio.

No allowance has been made in this for the effect of a current in the armature. That should at any rate be small, except in the case of arc-lighting machines, where a great number of turns of wire are placed on the armature with the purpose of gaining stability in the lights.

The absolute intensity of the magnetic flow per square cm. in the armature was quite high. In armature No. 5, the section of which is practically .75 that of the limbs, an induction of 14,000 per square cm. was given by 2,666 ampere-turns. For about 10,000 ampere-turns the induction was 17,000 per square cm; 10,000 ampere-turns gave an induction of 11,000 per square cm. through armature No. 10 and about 18,000 in armature No. 1. The latter was increased to nearly 19,000 by 12,500 ampere-turns.

The induction per square cm. corresponding to the best conditions in this machine is 14,000 per square cm. This is high for a dynamo. I believe Dr. Hopkinson has placed the figure in the Edison-Hopkinson machine as 8,000, and if true, this is probably seldom exceeded. I am aware that the value apparently reached 20,000 in the Manchester dynamo in Hopkinson's late tests, but that high value can not be given much weight, even though the armature was pretty well saturated. I may be placing the limit entirely too low, as I have a number of records where from 10,000 to 15,000 is claimed, but simple claims are endowed with great uncertainty.

It may be interesting to note the ratio of the areas in two or three dynamos of ordinary size. It is impossible to estimate the area of iron in an armature with wire on it, because of the uncertainty in the space occupied by insulating material between the iron discs. In the record of their late tests the Hopkinsons have given the areas of the armature and magnet limbs in the Edison-Hopkinson and the Manchester dynamos. In the Edison-Hopkinson machine the field had probably nearly the same permeability

Digitized by Google

as that of the armature core. The cross-section of the armature was about .8 that of the field, and the field was considerably more saturated than the armature. In the Manchester dynamo, the field probably had a lower permeability than the armature, and they were about equally saturated. The cross-section of the Gramme ring in this machine was about .6, that of the cross-section of the field.

STORAGE BATTERIES IN PRACTICE.[1]

BY EDWARD P. ROBERTS.

SINCE I had the honor of reading a paper on storage batteries at the annual meeting of 1885, we have discarded storage batteries distributed in various localities as the source of supply of current to our incandescent lamps, and have now all lamps connected with our incandescent dynamos. Having, however, a large number of cells we have placed in position at our station, about 1,200 of the same, charging them at night and using the stored current for day lighting and power, both of which are small in amount. In case of an accident to our machinery at night we could use our storage plant to tide over the time required for repairs, or until the majority of lights could be turned off. We have not yet had call, however, for such service, although we always have the batteries charged to a considerable extent before dark.

Since 1885 we have tried crockery and glass cells, with plates *suspended* in the same from glass rods and separated by glass rods from each other. This was a great improvement. The cells are placed on beams of a triangular cross-section, having a four inch base, which, in turn, rest on glass insulators, Western Union pattern, screwed on pins fastened on cross pieces. The beams are first painted and then given a coat of paraffine. The insulation from cell to cell is much improved thereby. When lead cells are used they are placed on porcelain insulators on the beams; flat places being cut on the vertical angle of the beam.

I am informed, with what degree of correctness I do not know, that storage batteries have been much improved, lately, over those with which I have had experience, but, even if such should be the case, I should hesitate to use them where gas lighting is cheap and where it might be desired to use only a *few lights* in *each* of a *large* number of localities separated by considerable distances. For special cases, however, I have no doubt the storage batteries can be used advantageously, particularly when the advantages of incandescent electric lighting are considered as being of financial value.

A few of the disadvantages arising from the conditions in the first part of the above paragraph, are :—

1st. A large plant in each locality is needed because of possible drain on same. The ordinary use in a residence may be 15 lamp hours and the possible use 100 lamp hours. This is an extreme example, but is not exaggerated as it was the necessary margin we had to provide, when we had storage plants in each house requiring light, for from 15 to 20 per cent. of our customers.

If several customers can be supplied from one battery plant the margin of extra supply can be reduced. In such case it will be necessary *either* to connect all the customers on all the batteries connected in multiple arc, and then disconnect the batteries and charge same in series, or, if it is desired to use a meter system in which discharge bears a certain proportion to charge, an attendant must be ready to throw extra batteries on circuit needing same, and note name of customer using extra supply.

2d. A large number of plants means a number of small stations to maintain and at which to keep supplies—distilled water, acid, etc.

3d. With a number of small stations it is difficult to regulate E. M. F. to current desired. However small the percentage of E. M. F. lost in the discharging wires the E. M. F. of the batteries should rise as lamps are turned on, or the lamps will be below candle-power, when a number are used, if for one or two the proper E. M. F. is used; or it will be necessary to strain the lamps when a few are used, in order to have normal brilliancy when a number are desired. To still further complicate matters, the E. M. F. is higher at the start, particularly if only a few lamps are "on" than it is later in the evening. These differences in E. M. F. are small but are sufficient to vary the candle-power of the lamps.

If, therefore, each customer is connected with one or more batteries for his sole use the following takes place: As darkness approaches one or two lights are turned on and are raised to abnormal candle-power straining lamps and making consumers dissatisfied with any less light later on, and as the customer's eyes become tired the light drops, possibly not below the normal candle-power but the *comparison* is bad and it requires considerable power of persuasion on the part of the company's "talker" and loss of his time as a "worker" to make the customer believe that his eyes are at fault and not the light. It may be that an entertainment is given in the house, and then the drop of candle-power is more noticeable, although it may not fall much below the normal.

Of course it is possible to design mechanism to overcome all such troubles, to throw in extra cells and extra batteries as required, etc. To design mechanism to accomplish such work with reliability and which will not be too costly for maintenance or prohibitory on account of excessive first cost is considerable of a problem. Matters are further complicated by the necessary use of charging mechanism. Also, it is desirable to have switches so arranged that it will be impossible to have charging current "on" when lights are being used *from* a battery. The writer has run 1,000 lights in such a manner (with charge on) for over a year, but does not advise it from any standpoint except necessity.

If a few large stations are used the E. M. F. at same can be readily shown at main station, and regulated from same if desired, or an attendant can be sent to any station needing regulation.

My experience teaches me that if batteries can be charged under inspection and allowed to have a discharge without excessive variation in amount of same, that the batteries will give *much more reliable* results than in any other way. The nearer this can be approached the more satisfactory will be the service.

If, therefore, it seems to be advisable in any city to erect a storage battery system for general distribution, I believe it will be found best to erect a very few large battery stations at the various centres, and that the interest on the extra cost of the wire leading from the same to the lamps, over what would be necessary if each light were close to a battery, will be far more than saved in the lessening of attendance alone; and that the avoidance of other evils I have mentioned will thus be clear gain.

CHEYENNE, WYO., April 5th, 1887.

1. Read at the meeting of the American Institute of Electrical Engineers, May 18th, 1887.

LEAD-ENCASED CONDUCTORS.[1]

BY DAVID BROOKS.

IN the first attempt in this country to work electric telegraphy by Prof. Morse, the wires were covered with cotton, soaked in a preparation of shellac, drawn into lead tubes four together, the intervening space being left empty.

This system was laid from Baltimore towards Washington, about five miles on the Baltimore and Ohio Railroad. I got this information from Tatham & Bros., who made

1. Paper presented to the American Institute of Electrical Engineers May 18, 1887.

Digitized by Google

most of the lead pipe purchased, although none of what they made was laid.

The experiment was a failure. About that time, or a little before, Prof. Jacoby, of St. Petersburgh, undertook to lay cotton-covered copper conductors in lead pipe with the intervening space filled with rosin. There have been very many attempts of that kind which proved to be failures, until the year 1856, when the discovery of petroleum brought paraffine into the market as a cheap commercial product. This was brought to my notice, and I made many experiments to test its insulating properties and as the result, it was taken to the patent office, and the patent awarded me, broadly, for its insulating properties.

It occurred to me that cotton-covered wires could be drawn into lead pipe and a useful system for underground purposes accomplished, but before rushing to the patent office, specimens were buried in the yard of my factory directly under a body of water, or earth soaked with water from a hydrant. These experiments were repeated, and for a long time were attended with failure. In the journal of the *Society of Telegraph Engineers*, published in London, we find accounts of similar experiments made there with like results.

Sealing the ends of a portion of this leaded cable, coiling it up, immersing it in melted paraffine, and raising the heat to about the boiling point of water, we noticed bubbles coming out apparently from the lead. Continuing this heat until all bubbles ceased to rise and then testing the cable, we found the insulation restored. The inference was brought to my mind that the coiling and the uncoiling of lead produced such molecular changes in the metal as to make it sufficiently porous, to admit moisture, and the many unsuccessful attempts to lay lead-covered cables, when the cables were insulated with paraffine, in deep water have served to strengthen this impression.

It must be borne in mind that paraffine, rosin, asphalt and other similar substances in their normal condition are brittle and the coiling and uncoiling of the lead pipe breaks them into innumerable small particles, which would leave the cable full of cracks or crevices.

These circumstances suggested the use of oil, and that brought out my system of iron tubes on account of their cheapness.

Lead-covered cables are now successfully made by having the insulating material either rosin, asphalt, or pitch, mixed with oil in sufficient quantity to make the material plastic and capable of being bent without fracture.

Some of the inventors of these mixtures have repeatedly stated that their insulating material is a secret. Other materials are the subjects of patents.

Asphalt, rosin, or pitch, when mixed with oil sufficient to make them plastic but not to crack, is heavier than water, and thereby a great advantage is gained. Paraffine, either solid or liquid, is lighter than water. If solid, it cracks—if liquid, a drop of water penetrates it by reason of greater specific gravity of water.

In pursuance of the foregoing remarks we must now look at the advantages of lead-covered conductors for all kinds of indoor purposes, or what are commonly called distributing purposes for electric lighting, etc.

An ordinary cotton-covered paraffine conductor for inside work is a dangerous thing. There has been sufficient property destroyed by the use of these cheap articles to pay five-fold the substitution for them of lead-covered conductors.

A lead-covered conductor, No. 18 gauge, may show an insulation resistance of 10,000 megohms per mile. When used for inside telephone purposes, if the lead covering is attached to a gas or water pipe, there is perfect safety from fire from the electric current, should the outside conductor come into contact with an arc light conductor.

A copper conductor, No. 00, for arc lighting can easily be insulated when lead encased to 500 megohms per mile, and when that is brought into a building for distribution purposes, and the lead covering connected with a water or gas pipe, there is perfect safety from fire from the electric current, such as occurred at the Temple theatre in Philadelphia. Again, we can scarcely see how persons could be injured by the electric current conveyed through an insulated conductor covered with lead pipe, as was one of the employés of the Brush company in this city, who was killed not two weeks ago, and, since then, as another person was killed in the Adams Express building in New York.

Mr. J. N. Miller, of Cincinnati, has referred to several instances where people have been killed by taking hold of the electric light conductor covered with what is known as the underwriters' insulation, which is simply no insulation at all when exposed to dampness. As this insulation cannot be made to burn with a lighted match, it has been supposed to possess great elements of safety. But when it is encased in lead, and used for incandescent or arc lighting, a great portion of the current passes through the "insulation" to the lead covering.

Taking a piece of this underwriters' wire, covered with lead, and testing the insulation from conductor to covering with a current from a Holtz machine, you can produce no disruptive discharge, because the current passes through the "insulation" quickly, as fast as you can generate it by the machine. Take a similarly constructed lead-encased cable, properly insulated, immerse both ends of it in the insulating mixture and pass a current from the Holtz machine through naked conductors through the air,

Fig. 1

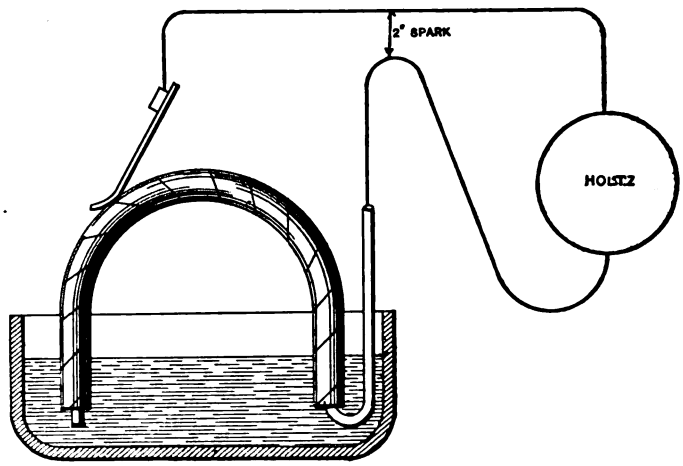

one pole connecting with the encased conductor and the other with the lead covering, a spark two inches long will pass between the two conductors in the air before any passes between the casing and the conductor, although the distance through the insulation is only one-eighth of an inch. The object of immersing both ends of the encased cable in the insulating material is to prevent short circuiting through the air from copper conductor to lead covering at the terminals.

Much has been said of the incombustibility of the underwriters' insulation. But it is no more incombustible than the proper insulation, provided the spark is not exposed to the air. We can make a disruptive discharge through the insulation if it be too thin, but no combustion takes place, because the air is excluded.

We can now compare this insulation with gutta-percha, caoutchouc, and their compounds.

Exposed to the air, a lead-covered conductor will last ten times as long. Besides this, when running these seam-covered conductors around right angled corners, the insulating covering is apt to open upon the outside of the bend, while a lead-covered conductor will bear much rougher usage.

This quality has been demonstrated by a lead-covered

Digitized by Google

cable for telephone and telegraph, armored with iron wire, and laid across the bottom of the river Delaware between Philadelphia and Camden seven years ago, where it has worked without interruption or deterioration for all that time, although occasionally hooked up by anchors and doubled upon itself.

Other cables laid in the same locality have had frequent interruptions; some have been entirely destroyed and replaced by similar ones, which have perished in their turn, and, for aught I know, the process is still going on. However, there is another class of electricians coming upon the stage who do a little of their own thinking, and they have found out that there is both economy and good service attained by more recent devices.

There has been one objection to these lead-encased conductors, that the space *at the terminals* between the casing and the conductor is so short that when exposed to a damp atmosphere moisture collects upon the surface of the unprotected insulating material, and thus the insulation of the conductor is impaired. Messrs. Tatham & Bros. have a simple device by which that difficulty is completely remedied. A short section of the lead casing is cut

Fig. 2

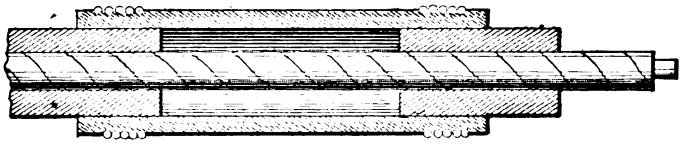

out some inches from the terminal and an India-rubber sleeve slipped over the gap, and over both parts of the lead pipe remaining. Both ends of the sleeve are then tightly bound to the lead pipe with twine, and the insulation of the cable is safe from moisture.

THE EFFICIENCY OF SMALL ELECTRO-MOTORS.[1]

BY H. E. H. CLIFFORD, S. B.

THE following tests of electro-motors are presented as giving a good example of the efficiency of some of the smaller motors in use at the present day. They have been exclusively devoted to the determination of efficiencies, the subjects of governing and of smoothness of running under different loads being left out of consideration. The only other series of tests which have been published in this country, so far as I have been able to learn, are those made on motors and dynamos at the International Electrical Exhibition held at Philadelphia in 1884.[2]

The tests have been carried on in the Physical Laboratory of the Massachusetts Institute of Technology, during the years 1885–86, by Messrs. F. A. Pickernell, H. G. Pratt, D. P. Bartlett, and the writer,—students at the Institute.

The number of machines tested was thirteen. I give below their names, together with either a brief description of their peculiarities or a reference to some publication in which they are described.

Griscom (S. P. Thompson's Dynamo-Electric Machinery, 2d Ed., p. 429).

Ayrton & Perry (S. P. Thompson's Dynamo-Electric Machinery, 2d Ed., p. 432).

Gramme-Machine à petite lumière (S. P. Thompson's Dynamo-Electric Machinery, 2d Ed., p. 120).

Magneto Gramme (S. P. Thompson's Dynamo-Electric Machinery 2d Ed., p. 117).

Thompson (S. P. Thompson's Dynamo-Electric Machinery, 1st Ed., p. 354).

Deprez (Prescott's Dynamo-Electricity, p. 707).

Monarch.—An electro-magnet revolving within a ring-shaped electro-magnet, making use of consequent poles. The ordinary split-ring commutator is used.

Cleveland.—The armature, made up of two shuttle wound armatures mounted on the same shaft, but placed at right angles to each other. This armature revolves in a strong field produced by two field magnets, wound so as to have consequent poles at their middle. Instead of brushes, four anti-friction rollers are used in connection with a four part commutator. The pressure of the rollers is adjusted by springs.

Model Edison Dynamo.—A miniature machine of the Edison patent, but series wound instead of shunt wound.

Diehl.—The field magnets are hinged at the yoke, so that the distance of the pole pieces from the armature is capable of adjustment. The armatures are made up of two Siemens shuttle wound armatures at right angles to each other on the same shaft. The motor is shunt wound. Two sizes were tested.

Hill.—The field magnets are placed below the armature, which revolves between cast-iron pole pieces. The armature consists of a series of eight spools of wire arranged in couples, the axes of adjacent couples being at right angles to each other. The motor is series wound. Two sizes were tested.

The efficiency of a motor is equal to the horse-power delivered, divided by the rate of consumption of electrical energy by the motor. That is, if HP = horse-power delivered, C = current in amperes, E = electromotive-force in volts, as measured at the terminals of the machine,

$$\text{Efficiency} = \frac{HP}{\frac{CE}{746}}$$

The instruments used in the determination of C and E were Sir William Thomson's current and potential galvanometers. These had previously been carefully calibrated, and found to be correct to within 0.2 per cent. in the positions at which they were used in the tests. In cases where the compensating magnets had to be used, their intensity was carefully determined on each day of use, so that no material error should be introduced from this source. As far as possible, however, the use of the magnets was avoided.

For measuring the power given out by the smaller motors, a raw-hide belt or a cotton cord was passed completely around a brass pulley on the motor shaft, the upper end being attached to a spring balance and the lower to a scale pan. By varying the weight in the scale pan the speed of the motor could be changed.

A Chatillon balance weighing to ½ ounce was used. In the tests on the magneto-Gramme and the Gramme, "à petite lumière," the machines were placed on a cradle dynamometer, a modification of the form devised by Prof. Brackett, of Princeton, and a dynamo machine was used as a friction brake. By closing the circuit of the dynamo through greater or less resistance, the work done, and consequently the power absorbed by the brake, could be varied.

In testing small motors great care must be taken in measuring the speed accurately. In these tests the speed indicator from a small siren was used. This was connected to the motor by an endless band passing from the pulley on the motor shaft to a pulley of the same diameter on the siren. The power required to run this indicator was excessively slight, and in computing the work done was neglected. The slip of the belt was negligible, as shown by numerous tests. With the magneto and Gramme, "à petite lumière" a continuously recording engine counter was used, connected to the motor by means of a flexible spiral spring.

The following table gives, in parallel columns, the names of the motors tested, the current in amperes, the electromotive-force in volts at the motor terminals, the activity

1. Read at a meeting of the American Academy of Arts and Sciences, March 9, 1887. Reprinted from *Technology Quarterly*.

2. Reports of Examiners of Section XXIX., Supplement to the Journal of the Franklin Institute, March, 1886.

Digitized by Google

in horse-power, the maximum efficiency and the speed for maximum efficiency in revolutions per minute :—

TABLE I.

Name of Motor.	C.	E. M. F.	Horse-power.	Maximum efficiency.	Speed.
Griscom	3.94	6.74	.006	17.0%	1400
Ayrton & Perry	14.4	11.1	.082	38.4	831
Gramme "à petite lumière".	5.29	157.6	.945	84.5	2227
Magneto Gramme	12.6	27.4	.138	29.8	2067
Thompson	4.90	8.50	.012	21.7	2370
Deprez	4.74	10.4	.011	16.6	2140
Monarch	4.85	5.78	.004	10.1	578
Cleveland	6.78	12.0	.054	49.8	1360
Model Edison	0.82	90.5	.051	51.4	4065
Diehl, No. 1	7.65	16.5	.021	12.3	4180
Diehl, No. 2	6.12	15.1	.031	21.9	2480
Hill, No. 1	4.77	10.3	.010	14.8	2036
Hill, No. 2	5.04	15.1	.032	31.6	3030

TABLE II.

Rev. per minute.	Electromotive-force in volts.	Current in amperes.	Horse-power put in.	Horse-power taken out.	Efficiency %
1715	75.8	1.05	.1070	.0278	26.0
1934	75.6	.987	.1000	.0290	29.0
2372	77.4	.942	0978	.0320	32.7
2414	75.6	.892	.0904	.0306	33.6
2748	75.6	.835	.0846	.0312	36.9
2895	75.6	.807	.0817	.0310	38.0
3085	89.8	.990	.1192	.0462	38.8
3136	76.4	.795	.0814	.0311	38.2
3200	90.2	.960	.1160	.0448	38.6
3234	72.0	.808	.0840	.0328	39.1
3722	76.4	.685	.0702	.0291	41.5
3750	91.9	.890	.1100	.0466	42.6
3957	98.8	.940	.1246	.0544	43.7
3992	91.9	.840	.1035	.0454	43.8
4065	90.5	.820	.0995	.0512	51.4
4284	98.8	.675	.1160	.0533	45.9
4310	90.7	.780	.0948	.0426	45.0
4352	98.6	.850	.1124	.0516	45.9
4860	96.6	.750	.0971	.0437	45.0
4910	98.8	.775	.1027	.0490	47.7
4922	100.0	.812	.1094	.0519	47 5
4975	96.4	.720	.0930	0399	42.9
5050	95.8	.690	.0886	.0376	42.4
5640	96.0	.690	.0888	.0388	43.7
5870	95.8	.660	.0847	.0365	43.1
6100	95.3	.610	.0779	.0299	38.4
6130	95.9	.630	.0810	.0321	39.7
6206	95.5	.620	.0794	.0315	39.7

The table preceding gives the tests in full, made on the model Edison dynamo, and illustrates very well the relation of speed and efficiency. This machine is built somewhat after the style of the old Edison Z machine. It is series-wound, and has about the resistance, hot, of an Edison incandescent lamp, old style. The dynamo is an exceedingly neat and smooth running machine. The motor runs without vibration and with no sparking, and heats up but very little, even at the highest speeds. It has been run for two minutes at a speed of 10,000 revolutions per minute. The great speed here obtained by such simple means, together with the readiness with which it can be varied within wide limits, indicate the availability of such a motor in any physical experiments in which a great speed of revolution is needed, as in studies of the velocity of light, the duration of the electric spark, etc.

TABLE III.

Name of Motor.	Weight in pounds.	Maximum horse-power delivered.	Horse-power per lb. weight.
Griscom	2.8	.0202	.0072
Ayrton and Perry	39.	.1738	.0045
Gramme "à petite lumière"	172.	1.816	.0077
Magneto Gramme	70.0	.1512	.0022
Thompson	6.3	.0138	.0022
Deprez	9.6	.0138	.0015
Monarch	6.1	.0041	.0007
Cleveland	18.5	.1290	.0032
Model Edison	15.25	.0544	.0036
Diehl, No. 1	9.5	.0209	.0022
Diehl, No. 2	20.0	.0309	.0015
Hill, No. 1	7.0	.0120	.0017
Hill, No. 2	16.0	.0374	.0023

One of the chief advantages derived from the use of electromotors is the small weight per horse-power developed. The motors, which we have tested with one exception, the Gramme machine, "à petite lumière," have been intended for doing any light work, and the efficiency exhibited is not, of course, nearly as high as would be shown with larger machines. Activities varying from 1.31 h. p. to .004 h. p. have been obtained, with efficiencies varying from 84.5 per cent. to 10.1 per cent. Professors Ayrton and Perry in their paper on "Electro-Motors, and their Government" (*Journal Society of Telegraph Engineers*, 1883), state that motors may be constructed to deliver one h. p. per 100 lbs. of dead weight. Table iii. shows the horse-power per pound weight of the various motors tested, and in no case does it rise as high as 0.01 of a h. p. Their own motor, as will be seen by referring to the table, gives but 0.0045 of a h. p. per pound of dead weight. In the most efficient machine tested, the horse-power delivered per 100 lbs. dead weight of machine falls a little short of 0.8 of a h. p. I think that for moderately small motors, about 300 lbs. per h. p. would be a closer figure, although with larger motors this would of course be considerably reduced.

ROGERS LABORATORY OF PHYSICS, March, 1887.

A FEW COMPARATIVE STATISTICS OF ELECTRIC RAILWAYS.[1]

BY T. COMMERFORD MARTIN.

IT is not now my intention to present a paper on the general subject of electric railways. That I did at a meeting of the Institute held last December, when I was enabled to offer a few statistics on the electric railway as compared with horse, cable and other methods of traction for street cars. I have found since then a great desire generally for information as to the status of electric roads in the United States and Europe. Street railway men, investors and others have wished to know whether such a thing as an electric road was really operating anywhere or not, and, if the lines were running, what the cost of construction and operation was. The tables I submit herewith are intended as an answer to those queries. It has been difficult to get at a common basis of estimate and statement. With regard to the European roads, I would say that I have been greatly indebted for the figures to a most admirable and exhaustive paper, read a few weeks ago by Mr. Anthony Reckenzaun before the London Society of Arts. In Europe, as here, various systems of transmitting the current and of connecting up the motor with the car axles and wheels are in use, and, as yet, no determination as to the best method seems to have been reached.

Respecting the figures for this country, I would say that they are necessarily very much in the shape of an estimate as to the number of passengers; though, by allowing each car only 50,000 passengers a year—merely 150 a day—my calculations come out as rather low. The facts may be summed up by saying that in Europe the electric railways are now carrying passengers at the rate of 3,000,000 annually. In America they are carrying at the rate of over 3,500,000, and when the roads now building are finished—to say nothing of the scores for which contracts are being made—the number carried will be at least 7,000,000 annually. When the roads at the places I enumerate in the tabular foot-notes all go into operation, the number will be easily quadrupled. As to cost, I would remark that in every instance yet brought to notice, electricity has spelled economy. I saw recently some authentic and extremely elaborate statistics for 1879 of street railways and their cost in New York and Brooklyn. They were taken from the various official reports. The showing for the total cost of operation per car ranged between $8 and $10 per day at that time. The saving on that with electricity is, according to circumstances, at least 25 to 40 per cent. with heavy traffic. I have provided copies of the following tables for distribution among the audience and need not read them.

1. Read before the American Institute of Electrical Engineers, May 18th, 1887.

Digitized by Google

ELECTRIC RAILWAYS IN EUROPE, APRIL, 1887.

Place.	Length.	Motors and Motor cars.	No. of passengers.	Freight.	Total expense of operation.	Car miles run yearly.	System of Conductors.	Prime power.
Lichterfelde-Berlin, 1881.....	1¼ miles	2	100,000 yearly.	.....	.....	.....	All rail.	Steam engine.
Brighton, 1883...	1 mile (single track).	2	1,000,000 total.	.....	1.92 pence per car mile.	46,950.	All rail.	Gas engine.
Moedling-Hinterbruehl, 1884....	2.8 miles (single track and sidings).	12	340,000 yearly.	.....	3.42 pence per car mile.	91,002.	Overhead slotted tubes.	Steam engine.
Frankfort-Offenbach, 1884.	4.1 miles(double track).	14	990,000 yearly	.....	3.83 pence per car mile.	292,269.	Overhead slotted tubes.	Steam engine.
Zankerode (mine) 1882.....	790 yards (double track.)	1 locom. 16 wagons	.....	300 tons daily	.77 penny per ton	660 wagons daily.	Overhead inverted ⊥ rail.	Steam engine.
Hohenzollern (mine) 1884.....	820 yards (double track).	1 locom. 15 wagons	....	300 tons daily	.5 penny per ton	600 wagons daily.	" " "	Steam engine.
Portrush, 1883.	6 miles (single track).	4	Over 100,000 up to 1885.	....	2½ pence per car mile.	.....	Third rail.	Water power.
Besspool, 1885....	3 miles (single track).	8	300,000 yearly.	30,000 tons yearly.	4 pence per train per mile.	60,000 train miles yearly.	Third rail.	Water power.
Blackpool, 1884..	2 miles (single and double).	10	Over 1,000,000 total.	.....	Less than 4 pence pr car m.	.....	Conduit.	Steam engine.
Brussels, 1887 ...	.....	5	.....	....	.....	....	Operat'd by storage batteries	.....
Hamburg, 1886...	.....	2	.....	....	.....	.....	Operat'd by storage batteries	.....

New Roads.—A special charter has been granted by the Austrian Government for a road in the Austrian Alps to cost about $350,000, and to be 15 miles in length.

A road is being built in the great salt mines at Stassfurt, Germany.

The North Metropolitan Tramway Company in London has several motors now ready for use with storage batteries, on its line, awaiting powers from Parliament.

ELECTRIC RAILWAYS IN AMERICA, MAY, 1887.

Place.	Length.	Motors and Motor cars.	No. of passengers.	Freight.	Expense of operation.	Car miles run.	System of Conductors.	Prime power.
*Baltimore, Md., 1885	2 miles (single track with turn outs).	6	260,000 yearly.	.....	$4 per car per day.	Each motor runs 73 miles daily.	Third rail and overhead wire.	Steam engine
*Los Angeles, Cal. 1887...	3 miles, single and double.	8	200,000 yearly.	.....	.....	....	Single and doble overhead wire.	Steam engine
*Port Huron, Mich., 1885-6,...	4 miles, single track.	8	275,000 yearly.	... .	.....	....	Single overhead conductor.	Steam engine
*Windsor, Can., 1885.....	Nearly 2 miles, single track.	2	200,000 yearly.	.....	$4 per day for power	64 miles each car per day	Single overhead conductor.	Steam power from electric light station.
*Highland Park, Detroit, Mich., 1886..... ..	3½ miles, single track.	2	200,000 yearly.	.....	80 cents per day for fuel.	Each runs 13 h'rs daily; capacity, 30 passengers; speed, 15 miles an hour.	Sunken central rail.	Steam engine
*Dix Road, Detroit, Mich.,1886	1½ miles, single track.	4	300,000 yearly.	.....	.....	The trains run from 6 a. m. to 11 p. m.	Double overhead conductor.	Steam engine
*Appleton. Wis., 1886.....	4½ miles, single track & dble.	8	400,000 yearly.	.....	For power, wages of one man as they own their own water power.	17 hours daily.	Double overhead wire.	Turbine within wheels.
*Scranton, Pa., 1886.....	3½ miles, single track, four sidings.	3	300,000 yearly.	. .....	$9 per day for power, but are putting in their own engine.	Each car runs 85 miles per day.	Overhead wire.	Steam power from electric light station.
Denver, Col., 1886	3½ miles, single and double.	7	500,000 yearly.	....	$1.50 per day for fuel.	....	Conduit for series system.	Steam engine.
Montgomery, Ala. 1885-86.....	11 miles, single and double.	18	This ran 2 cars one year. Have just started other cars. (1,000,000 yearly).	....	Fifty per cent. less than horse and mule traction — General Manager's report.	....	Overhead conductor.	Steam engine.
†Kansas City, Mo.	.....	. .....	.....	....	....	....	.....	.....
Orange, N. J., 1887..... ...	½ mile built.	1	. . ..	.....	... .	.....	Overhead conductor.	Steam engine.
Boston, Mass. (sugar refinery), 1887.....	Short track within the works.	1 locomotive, 3 cars.	....	The cars in constant use all day; the loads averaging 10 tons per trip, and each round trip averaging 5 minutes	... .	... .	Overhead conductor.	Operated from the lighting dynamo.

* Extending line or increasing rolling stock. † No specific details received, line not being yet in regular operation.

New Roads—Electric railways are now in course of construction, or under contract, at Pittsburgh (3 roads); Los Angeles; Binghamton, N. Y., 4½ miles, 8 motor cars; Lima, O., 3 miles, 6 cars; San Diego, Cal., 9 miles, four 40 h. p. motor cars; Ansonia, Conn., 3½ miles (water power); New York city (for Fulton street) St. Joseph, Mo., 20 cars; Mansfield, O.; Ithaca, N. Y.; Harrisburg, Pa.; Woonsocket, R. I.; Richmond, Va., 40 cars, 11 miles of track.

Companies have been formed or steps taken to build and operate electric roads at Flushing, L. I. (2); Lincoln, Neb; Brookline, Mass. (2); East Cambridge, Mass.; Newton, Mass.; Boston, Mass.; Asbury Park, N. J.; Pelham Park, N. Y.; New Brunswick, N. J.; Plainfield, N. J.; Bayonne, N. J.; Worcester, Mass.; Scranton, Pa.; Carbondale, Pa.; Philadelphia, Pa.; Reading, Pa.; Bangor, Me.; Biddeford, Me.; Westfield, Mass.; Chicopee, Mass; Muncie, Ind.; Gratiot, Mich.; Tiffin, O.; Cincinnati, O.; Brooklyn, N. Y.; Coney Island, N. Y.; Rockaway, N. Y.; Winston, N. C.; Jacksonville, Fla.; Pensacola, Fla.; Birmingham, Ala.; Selma, Ala.; Atlanta, Ga.; Fort Smith, Ark.; Wichita, Kan.; San Francisco; San Jose, Cal.; Newton, Kan.

Digitized by Google

ABSTRACTS AND EXTRACTS.

ELECTRIC LOCOMOTION.

The *English Mechanic* of April 29th, publishes an abstract of Mr. A. Reckenzaun's very interesting and instructive paper on Electric Locomotion, read before the Society of Arts, April 20th, as follows :—

The author said it seems an easy thing to the uninitiated to reduce 800 revolutions of one shaft to 80 of another ; but when it has to be done in connection with the tramcar, a vehicle on which space is limited, noise objectionable, and dirt and dust in abundance, one obstacle after another crops up to disappoint the inventor who imagines he has solved the problem. On the Berlin-Lichterfield line one of the cars has run 76,000 miles since the opening, and has pulleys on the motor shaft and car axles with V-grooves in which run cords of spiral steel wires. The cords are made by winding a pair of wires closely on a mandrel rather less than one-eighth inch in diameter, so that the finished "cord' is a flexible spiral having an external diameter of barely 7-32 of an inch. This device, it seems, works without noise or vibration, though some little difficulty is experienced in adjusting the "cords" upon the pulleys ; for if too tight they will break at the joints, and if too loose slip at starting—not a disadvantage, as that is the most trying moment in all gearing driven by electromotors. Other devices are employed, such as the pitch-chain, but the spiral cords seem to be the best. On Mr. Volk's line at Brighton, belts made of leather links are used ; the armature shaft, with a 5 inch pulley, driving a countershaft with a 24 inch pulley, from which the belt is taken to the driving axle. The belts slip a little at starting, but that eases the motor ; while, if necessary, the countershaft being carried in adjustable bearings, the belts can be made as tight as desired. The expense per car mile of this line, the prime mover of which is a gas engine using gas at 3s. 3d. per 1,000 cubic feet, is only 2d.—a figure which is below that which Mr. Reckenzaun gives as possible when the most efficient machines are employed—viz., 3d. The Brighton arrangements are, however, scarcely suitable for ordinary tramcar traffic, as there is no mud to contend with, and the ordinary rails serve as conductors of the current. It should also be noted that each car last year made no fewer than 23,475 miles, and but for opposition in certain quarters the Brighton electric tramway would be a success in every sense of the term. Of lines worked by overhead conductors the most carefully constructed, if not the most important, is that arranged on the plan of Messrs. Siemens and Halske at Mödling, near Vienna. It is nearly three miles in length, and, like most other electric tramways in Europe, does nine-tenths of its traffic between April 1st and the end of October, the average cost being 3.42d. per car mile. The average speed permitted is a little over nine miles an hour, and the conductors are slotted tubes carried on posts 18 feet high and 90 feet apart, except on sharp curves. The bore of these tubes has to be made perfectly smooth, so as to offer but little resistance to the passage of the contact carriage, which consists of a flexible piece of flat steel carrying three gun-metal pistons made in halves, with springs in the middle, so as to keep the surfaces of pistons and conductor in contact. The pistons require renewal about every two months. Overhead conductors are, however, scarcely suited for electric tramway work, except in country districts, such as the line just referred to, or that between Frankfort-on-Main and Offenbach, which is 4.1 miles long, and has the slotted overhead tube, and a contact carriage made up of two solid iron pistons, which require renewal every three or four weeks at a cost of one shilling for each carriage. Both the Mödling and the Frankfort cars have spur gearing, and the experience gained with them is not favorable to the further utilization of that means of connecting the motor shaft with the driving axles. For instance, in the Frankfort cars a pinion of 17 teeth on the motor shaft gears into a wheel of 56 teeth on a countershaft, and a pinion of 26 teeth on that drives a wheel of 52 teeth on the axle of the car, giving a ratio of about 6.6 to 1 between the motor and the car wheels. The motor, however, runs at the comparatively low speed of 500 revolutions per minute, and the whole arrangement is heavy, for the train of wheels weighs about 4 cwt., and the total weight of the driving gear for one car is more than 26 cwt. The gearing produces so much noise and vibration that the sensation experienced in the car is anything but agreeable, and the wear and tear are so great that the pinion on the motor shaft wears out in a month, although made of hard gun metal. Mr. Reckenzaun says that one of the cars is being fitted with wheels having double helical teeth, which are expected to work more smoothly and be more durable ; but it may be doubted whether any difference in the shape of the teeth will render toothed gearing tolerable, although it should be mentioned that nearly one million passengers patronized the Frankfort electric tramway last year in spite of the disagreeable noise made by the gearing. On the Port Rush line, the longest electric tramway in the world, pitch-chain gearing is used, and is stated to work satisfactorily, as it does also on the Bessbrook-Newry line. Both these lines are worked by electricity derived primarily from water power, and the cost is respectively 3d. and 4d. per car mile, in the latter case including everything. Mr. Reckenzaun referred briefly to the Blackpool line, and mentioned the systems devised by Profs. Ayrton and Perry, and by Messrs. Pollak and Binswanger, the former having the "third rail" divided into sections, the connection with the main cable being made automatically by the train as it moves along ; and the latter an altogether novel system, in which a powerful magnet under the car attracts, or is supposed to attract, an iron armature in a thoroughly insulated trough beneath each rail section, which armature when attracted makes contact between the cable and the surface rail, and through the latter with the switch of the car motor. Both systems are ingenious and worth trial ; but at present no opinion can be formed of their efficiency, as they exist only on paper. So far, we have referred only to lines in which the current is conveyed from a central station to the car throughout the whole length of the tramway ; but batteries carried by the car itself are a much earlier device, having been adopted so long ago as 1839, when, of course, they were too expensive, the secondary or storage cell not having come into knowledge then. In order to compare the two systems, Mr. Reckenzaun estimates the efficiency of the conductor and of the secondary battery in the following manner. Taking the tramway at Mödling, the conductor has two ohms resistance, 20 amperes of current for each car, and 500 volts E. M. F. at the terminals of the charging dynamo. Supposing only one car running on the line, the waste of energy will be practically nothing at the commencement of its journey ; but it will be $20^2 \times 2$ when it approaches the furthest end of the line ; the average resistance—that due to half the length of the conductor —is 1 ohm, therefore, the average loss is only $20^2 \times 1 = 400$ watts against $500 \times 20 = 10{,}000$ watts generated by the dynamo, or a loss of four per cent. With six cars on the line equally distributed, however, using 120 amperes, the loss will be 14,400 watts out of 60,000, or 25 per cent.; and so by increasing the number of cars and the current the efficiency becomes less and less. With the accumulators the loss is constant, no matter how long the line, provided the quantity of stored energy is sufficient for the time, and it matters not how many cars run at the same time on the tramway. The weight to be propelled would be increased, which would entail a corresponding augmentation of power, and therefore a greater consumption of fuel would be the result. But fuel really plays a small part in the total expenditure, and viewed from the standpoint of convenience the propulsion of tramcars by means of secondary batteries is the best system that can be adopted, especially in towns, because it leaves the permanent way in its present simple state. Whether each car should carry its own battery and motor, or an electric locomotive should be used for hauling cars, will depend on circumstances ; but so far as the neighborhood of London is concerned, it appears that the electric locomotive will be the first system tried, for trips have already been made with the Elieson locomotives on the Romford road out of Stratford, and we presume they will soon be put into regular work. The locomotives and the socondary batteries are ready, and but for the roundabout methods of the legislature would have been earning money and conveying passengers long ago. These locomotives weigh "roadworthy" something like seven tons ; what they will do in the way of hauling cars remains to be proved, but there is not much doubt that they will be cheaper than horseflesh, and it is certain that they will leave the road as clean as they found it—a point which should not be forgotten in comparing the respective merits of horse and mechanical traction. Sufficient has already been done to show that the cost of electric tramways need not exceed 4d. per car mile, whereas horses cost from 7d. to 10d.; so taking the lowest estimate there is a saving of one-half, and probably when experience has enabled managers to rub off items which can be dispensed with, the economy may be still more. As to the gearing for transmitting the power, Mr. Volk believes in the linked leather belts, but Mr. Reckenzaun and others consider the worm arrangement the best ; on this point the mechanicians may have something to say, for if electric tramcars are to be introduced it will not be either the noise or the vibration produced by the gearing that will long remain an objection. It may be that the spiral wire cords adopted and used for some time on the Berlin line will be found the best arrangement ; but it is certain that spur gearing will not do, because, however smoothly it may run when new, it rapidly deteriorates and makes so much noise as to be decidedly objectionable. If the electricians can, however, place electric tramcars on our roads, the gearing will not long be a source of trouble to them, for there are many methods of transmitting motion which are free from noise, which only await a favorable opportunity for asserting their superiority.

ELECTRICITY FROM ATMOSPHERIC OXIDATION.

When a sheet of copper is kept out of direct contact with air by being immersed in ammonia solution, oxidation

Digitized by Google

of the metal is gradually effected by virtue of the dissolution of oxygen from the air at the surface of the liquid and diffusion of the oxygen solution to the vicinity of the copper. This action can be materially accelerated by arranging horizontally on the surface of the fluid a plate of platinum or other electrically conducting material not chemically acted on by the liquid and connecting this by means of a wire with the copper plate. Dr. C. R. Alder Wright, F. R. S., and Mr. C. Thompson, F. C. S., have succeeded in producing a voltaic cell on this plan. The upper conductor or aeration plate being simultaneously in contact with the atmosphere and the liquid, attracts to its surface a film or ama of condensed gases, the oxygen of which becomes gradually transferred to the copper, and a voltaic current circulates in the wires. Cuprous oxide is formed in the solution of ammonia in contact with the copper plate. Other combinations of the sort have been tried by Dr. Wright and Mr. Thompson, and some of these yield currents sufficient to produce measurable amounts of electrolytic decomposition outside the cell. —Glasgow *Engineer*.

CORRESPONDENCE.

NEW YORK AND VICINITY.

Shall we Have an Electric Railway Boom.—Bidding for the Asbury Park Franchise.—The New Orange Valley Enterprise.—The Cross-town Railway in New York.—Fatal Dynamo Accident.—Newark's Pony Messenger Service.—A House for the Electrical Engineers.—Competition for City Electric Lighting.

PUBLIC familiarity with electric railways will rapidly follow the actual introduction of this improved method of transit, and it is by no means improbable that it may result in a "boom" in the course of a year. There is certainly considerable satisfaction in conducting a railway business having a remunerative traffic, if we may judge from the remarks of a gentleman who has recently started one partially equipped with an electric plant. There are, he said, no cutting of rates, no trade discounts, no bad debts, no bills to collect where we "will send a check next week" or "the proprietor is out of town." Expenses are known to a dollar, and your revenue comes in complete every day. If your enterprise is going to pay at all, it pays from the beginning.

There has been a little competition at Asbury Park, N. J., in bidding for a franchise for a street railway at that noted summer resort. The Daft company bid $2,300 per annum for a 10 year term and $3,000 yearly for 20 years. The VanDepoele company offered five per cent. on the gross earnings annually, provided they exceeded six per cent on the investment. In case they fell short, one per cent was to be deducted for each one per cent. short in the income. The differing methods of bidding evidently threw the burden of agony back on the commissioners, who have not as yet been able to decide which proposition is the most profitable to the public. As the road is to be started July 1st, something will have to be done soon.

The experiment which is being conducted on the new Orange Cross-town and Orange Valley railway, to convince the authorities and the people that the electric motor is not an obnoxious thing, is doing very successful missionary work. Passengers at once appreciate the improvement in electric lighting over the consumptive kerosene lamps ordinarily used on street cars. If the successful operation of this road actually overcomes the conservatism of a Jersey councilman, great progress will have been made already. It appears probable that this will be the case, and that the opposition of property holders to the planting of poles will be the only remaining obstacle. Possibly the financial success of the enterprise will warrant avoiding this difficulty by the adoption of storage batteries.

The public advertisement of the North and East river railway franchise in this city, contains the following clause:

Sixth—The plans upon which this North and East river railway shall be built and operated are those of the Bentley-Knight Electric Railway Co., and are described as follows: The plant consists of a stationary source of power, engines, boilers and dynamo-electric machines, which may be located at an extreme end of the line, at tide-water or at a station; a conduit running from the source of power to and along the whole length of the line, containing stationary and permanent conductors, which shall receive and distribute the electric current to the motors placed under the cars and geared to the wheels or axles, and a depending conductor, which, passing through a slot in the conduit and sliding in contact with the stationary conductor, maintains unbroken connection with the source of power.

One of those fatal accidents which frequently arise because of the familiarity of employés with dangerous apparatus, recently occurred at the Adams Express Co.'s building, No. 59 Broadway. John H. Simpson, the night engineer in charge, while showing the dynamo to a friend, recklessly placed himself in contact with an exposed portion of the apparatus, which resulted in his almost instant death. He came from Philadelphia where he had had considerable experience in electric lighting.

Newark being a city of magnificent distances, the prompt delivery of telegrams has always been a serious problem, while its rapid and frequent railway communication with New York, has made delay in telegraphic communication all the more apparent. If a man can make a certain trip personally by railroad including a good walk at each end, in an hour, he will naturally growl if a telegram requires two hours to cover the same distance. The telephone has been used with considerable success in Newark, to avoid the delays in the ordinary messenger service. Manager Feary, of the Western Union office is now, however, divorced from the telephone business, and has introduced a pony express delivery. This certainly has one advantage, it will be fun for the boys, even should the customers not like it. Whether the boys will take the shortest route, or indulge in dashes over the most popular streets, is a question to be determined only by experience. The ingenuity of the average messenger in finding good reasons for not doing what he ought, is one of the most serious obstacles to the efficiency of telegraph service.

The American Institute of Electrical Engineers, which has quietly pursued its course for three years past in nurturing the growth of electrical science, has suddenly come to the front with a determination to buy a house, and become one of the recognized public institutions of the city. The mere fact that other organizations own houses, has proved an incentive for the Institute to undertake a similar enterprise, and consequently gain that character for stability which naturally attends the acquirement of real estate. As there is nothing of the kind in existence in the city, while the number of people interested in electrical research is increasing very rapidly, there appears to be every reason to believe that success will crown the undertaking, and it will certainly add to the public appreciation of electrical work.

There has been an unusual amount of dickering over the city electric lighting for next year. In spite of the supposed demand of the public for the wires to be placed underground, this has been lost sight of, in the anxiety to profit by the competition between the various companies who are anxious to get in. The old companies have, in many cases, bought their experience at a pretty high price, while some of the new ones have profited by it. Altogether, the unseemly strife for the contracts does not seem to be very encouraging to those who expect soon to be obliged to bury their wires and furnish lights at the lowest price prevailing in the rural districts.

NEW YORK, May 26th, 1887.

PHILADELPHIA.

Continued Construction of Pole Lines in Philadelphia.—Delay of Councils in Enforcing Underground Ordinances.—Another Law Suit Concerning the Chopping of Bankers and Merchants' and American Rapid Wires by the Western Union Co. Two Years Ago.—Suit of the Edison Co. against the Keystone Electric Light Co. for Infringement of Patents in Philadelphia.—The New Jersey Southern Telephone Co.—New Underground Conduits for the City's Electric Lighting.—Electric Transmission of Power Between Harrisburg and Steelton.

WHILE the people and city councils have been clamoring for the removal of all over-head telegraph, telephone and electric light wires, the city itself is aiding in the continuation of this dangerous nuisance, as it permitted the erection of 371 additional poles and the stringing of 226 fresh miles of wire during last year. Of this number private companies are responsible for planting 231 poles along the streets, and loading them down with 122 miles of telegraph and telephone and 47 miles of electric light wires, while the city's electrical department erected the remainder of the poles and wires. There are already 8,870 poles and 5,289 miles of wire blocking the streets of Philadelphia, and chief of the electrical department Walker says there will be 300 new poles pointing skyward before the end of this year. The Northern Electric Light Company is now planting about 100 new poles along East Girard avenue, second street from Germantown road to Diamond, and other streets in the northeastern part of the city.

Councils first began its crusade against poles and over-head wires in 1882, and several times dates were fixed for the compulsory burial of these troublesome wires and the removal of the poles from the streets, but the power of the telegraph, telephone and electric light companies has been such that councils always receded from their position.

Chief Walker says that the increase in poles is mainly due to the extension of the electric light service for lighting the public highways. There was a general ordinance passed in 1885 allowing the electric light companies to erect poles at will, without asking Councils' permission, providing that the same should be used exclusively for electric lighting. It would seem that the companies could easily take advantage of this generosity of Councils to use the poles for furnishing lights to private parties along the routes of the lines used for city lighting, but chief Walker says he does not know of any instance where this advantage has been taken by the companies.

Digitized by Google

Chief Walker declares that he will heartily aid Councils in any effort they may make in trying to secure the removal of the poles and wires. Worse than all else is the failure of these companies to pay the meagre license charges that the city has sought to collect from them for the privilege of using the streets. During the past year the city charged the companies $23,213 for attachments to city poles and maintenance of overhead poles and wires and underground conduits and wires, but the companies only saw fit to pay $7,008.50, and chief Walker has been compelled to place the other bills in the hands of the city solicitor for collection. The most striking examples of this indifference are the Bell Telephone and Western Union Telegraph companies. The former was assessed $6,163, but only paid $1,398.59, and the latter was assessed $3,274, but only enriched the city treasury by $26.50 of this amount. The Mutual Union Telegraph Company, a creature of the Western Union, remains indebted to the city $1,615 and the Bankers and Merchants' Telegraph Company $1,476.

In this connection chief Walker says that the city ought to begin to establish its own plant for the lighting of streets with electric lights. Philadelphia now has 500 public electric lights, but this number will soon be increased to 526. As the average price per light is 54 cents a night, the total cost of maintaining these lights is $107,674 per annum. In reference to this matter the head of the electrical department says:

"The lighting of our public thoroughfares by electricity has reached a point which I think would justify the city in establishing its own plant for that purpose; the city, owning the gas and water works, would have the power necessary for the service, and would be at little additional expense for that necessary agent. The outlay for conductors, lamps, dynamos and other machinery would be the greatest expense. Its first cost would in a measure be returned to the city by saving the amount charged by private companies in excess of the actual cost of production, and also by the increased facilities offered for public lighting. It has become an established fact that wherever the electric light has been introduced great assistance has been rendered the police in discharge of their duties, and crime and criminals disappear from its immediate neighborhood."

Attorneys John G. Johnson, Lewis C. Cassidy, John R. Read and Silas W. Pettit, on behalf of the Western Union Telegraph Company, have filed a bill in equity, in the United States Circuit Court against Clinton P. Farrell, the receiver of the Bankers and Merchants' Telegraph Company, for this state, for the purpose of having enjoined the prosecution of the suit growing out of the troubles between the Bankers and Merchants' and the American Rapid Telegraph companies. The suit was begun some time ago by the receiver of the Bankers and Merchants', for the purpose of recovering damages for the cutting of wires and interference with the Bankers and Merchants' business. The sum involved in the suit is large, the amount named in the bill being $1,500,000. The Western Union obtained possession of the property of the American Rapid Telegraph Company in July, 1885, and has operated it since that time. It denies that it cut, mutilated or destroyed any of the wires, cables and appliances of the Bankers and Merchants' Telegraph Company, or of any other company, but, on the contrary, claims that only wires strung upon the poles and rights of way of the American Rapid Telegraph Company were arranged so far as necessary to attach them to the offices of the Western Union, so that they could be used.

The bill gives a history of the litigation growing out of the affairs of the Bankers and Merchants' and the American Rapid Telegraph Companies, and asks the court to decree to be void the alleged agreement between those companies of the 18th of October, 1883, for the maintenance of their wires. An accounting is also asked for between the American Rapid Telegraph Companies, especially the one doing business in Connecticut, and the Bankers and Merchants' Telegraph Company, to ascertain and determine which and how many of the wires strung in the State of Pennsylvania upon the poles and rights of way of the American Rapid Telegraph Company by the Bankers and Merchants' Company are or were at any time the property of the American Rapid Company, by reason of the cost of the same having been charged against the latter. It is also asked that the defendant be directed to make answer to the matters alleged in the complainants' bill.

A bill of complaint has been filed in the United States Circuit Court on behalf of the Edison Electric Light Company asking to have the Keystone Light and Power Company enjoined from the making of an alleged infringement upon eight patents held by the complainant. The court is asked to restrain the defendant company from proceeding with the construction of its incandescent electric light plants. The suit is of the same nature as the one pending in Trenton.

The new telephone company which has just been organized under the title of the New Jersey Southern Telephone Company has been promised great encouragement, and will start business with rates below those of the Bell companies. The company will erect its wires in the ten counties south of Trenton, and will employ the Emnor patent, by which sound messages are sent by a broken or intermittent current instead of by the Bell continuous circuit system.

Director Wagner has authorized the board of city trusts to open Front street from South to Vine for the underground conduits for electric light wires.

It is understood that an electric motor will shortly be put in operation through a line between Harrisburg and Steelton, a distance of two and a half to three miles.

PHILADELPHIA, May 17, 1887.

BOSTON.

Gas and Electric Light Interests.—Underground Wires.—Police Signal System Authorized for Boston.—New England Telephone Co.—The Bill to Regulate Telephone Charges.—The West End Railroad to try Electricity.—Personal Mention.

AT a recent town meeting in Brookline, Mr. W. W. Potter asked that the selectmen give good reasons why the town did not have better electric lights, and made a statement to the effect that in Boston light by electricity could be obtained at hardly more than one-half the cost of light in Brookline.

The selectmen report that the electric light now furnished to the town is not the same as that exhibited in 1885, but that, as far as practical results go, an equally good light is furnished. The light now used is the one arc, of a so-called 1,200 c. p., the light being furnished at a cost of 50 cents per light per night. The light used in Boston is 2,000 c. p., and is furnished at a cost of 65 cents per night. The selectmen acknowledge that they do not know the exact candle power of the light furnished to the town, and that, as far as they know, no satisfactory tests have been made by anybody. The reason given by the board for the high cost of the lights is that, as a contract is made for one year only, light cannot be furnished as cheaply as when the contract is for a longer time. They, as a board, do not think that, under the conditions imposed by them on the light company, the price of 50 cents per light for each night is exorbitant, and although an offer has been made to light the town with an equally good light, and at a cheaper rate, provided a large contract can be made, they do not feel at liberty to enter into a contract for more than one year. The above report will be submitted to the town, and the selectmen advise that the contract of last year be renewed, they being satisfied that the cost is reasonable and the light as good as can be obtained for the money.

At a meeting of the Newton common council, the committee on fuel and street lights recommended that contracts be made with the Newton Electric Light and Power Co. for the entire street lighting of the city with the arc, incandescent and oil lights, which would enable the committee to light the streets in a satisfactory manner within the appropriation. The committee investigated and witnessed an exhibition of the Edison municipal incandescent system of Portland, Me., where it appears to give general satisfaction. It is proposed to have 71 arc lights, to be lighted 20 nights in the month, from sunset to sunrise; also to have the electric light company furnish 700 incandescent lights, 400 to be of 25 c. p., and 300 of 20 c. p., to be burned 20 nights in each month, from sunset to midnight, at $15 per light per annum. An order was offered by councilman Redpath, authorizing the committee on fuel and street lights to contract with the electric light company to furnish 71 electric arc lights, to be lighted 20 nights in each month, and to burn from sunset to sunrise, the lights to be of 1,200 c. p. and to cost 50 cents per light per night. After a lengthy discussion the order was adopted.

The board of selectmen and the president of the Woburn Electric Light Co., have signed a contract to light the town for three years. By the terms of the agreement the company is to furnish 40 arc lights to be run until 12 o'clock, and seven to burn until daylight. By this plan all the gas lights will be displaced and a portion of the gasoline. These lights, by the terms of the vote of the town, will be furnished for $2,500 per annum. There can be no doubt that as much gas will be consumed in the future as in the past, as the town is rapidly increasing in its population.

The fight at the State House between the gas companies and the electric light companies is attracting considerable attention. It was practically initiated last year, when the gas companies of the state petitioned for authority to establish and maintain electric light plants. The gas companies were defeated but came up smiling this year with an armful of petitions. Twenty-three gas companies, through their legal representatives, petitioned the general court for authority to furnish electric light and power. At present there is no law to allow or prohibit gas companies maintaining electric light plants. The gas companies are simply under the supervision of the gas commission, while the electric light companies have no restrictions. Last year six gas companies obtained special charters granting the right to establish electric light plants. They are aware that there is no law to prohibit them from so doing now, but prefer to have some specific law giving them permission. Two bills have been rejected, and a third known, as the Hartwell bill, has been refused engrossing. This bill authorizes existing gas companies, with consent of the gas commissioners, to engage in the business of generating and furnishing electricity for light and power. The electric light

Digitized by Google

companies want the gas companies kept out from places now using electric lights.

In the Massachusetts Legislature, on the 5th inst., Mr. Savage of Taunton, when the House took up the bill to authorize gas companies to furnish electric light, opposed it as in the interest of a monopoly of artificial lighting. He said the gas companies will swallow the electric light companies, and that they do not ask for this bill in good faith. Gas making is more profitable than the manufacture of electric light, and if the bill passes, the gas companies will dictate whether or not the people shall have electric lights. Mr. Hallett, of Nantucket, believed that a general law as proposed was in the interest of gas consumers. Mr. Wadlin, of Reading, doubted whether the gas companies wanted in good faith to make electric light. Mr. Monk, of Braintree, moved to amend so as to make gas companies apply within two years of the passage of the bill for permission to manufacture electric light. Mr. Walker, of Worcester, supported the bill as in the interest of consumers. He believed that gas companies, with their plant, could furnish electric light cheaper than the present companies incorporated for that special purpose, and he predicted that it would not be long before the electric light would be sold for one-third of its present cost. The extraordinary power of the gas commissioners, he argued, would be ample to prevent any monopoly. The vote on ordering the bill to a third reading was 70 to 70. Speaker Noyes then voted in the affirmative. A roll call was ordered, resulting in 78 yeas to 76 nays. Mr. Upham, of Salem, gave notice of a reconsideration.

A petition was received by the Board of Aldermen, on the 1st inst., from the Edison Electric Illuminating Co., for leave to lay underground conductors connected with its stations for electric lighting purposes, in the district bounded by and including the following named streets: from the corner of Westchester Park and Beacon street, through West Chester Park to Chester square, through Chester square, Chester Park, Albany, Lehigh, South, Kneeland and Federal streets, Atlantic avenue, Commercial, Causeway, Nashua, Minot, Lowell, Brighton, Leverett, Charles, Pinckney and Brimmer streets, and through Beacon street to West Chester Park.

The New England Telephone Co., are completing their nine partition conduit through Tremont street, which was stopped by cold weather last fall.

The cities committee of the Legislature have reported a bill authorizing the board of police of the city of Boston, to introduce a police signal system in said city. The bill also authorizes the board to draw upon the city treasurer for money to introduce the system, the amount not to exceed $75,000, and the same to be paid out of the fees for liquor licenses. The privilege is given of attaching the wires for the system to any structures now wanted for wires.

At a meeting of the directors of the New England Telephone and Telegraph Co., on the 27th ult., a dividend of 75 cents per share was declared, payable Monday May 16, 1887, to stockholders of record at the close of business Wednesday, May 4, 1887. The transfer books will be closed from May 5, 1887, to May 15, 1887, both days included.

The following table shows the results of the New England Telephone and Telegraph Co.'s business for the quarter ended March 31, the first quarter of the fiscal year:

	1887.	1886.	Increase.
Gross receipts	$239,908	$220,744	$19,164
Gross expenses	165,461	156,837	8,624
Net earnings	$74,447	$63,907	$10,540
Constructions	3,550	899	2,651
Surplus	$70,897	$63,008	$7,889

The committee on mercantile affairs has reported a bill to fix telephone rates. Senators Alger, of Middlesex, and Cook, of Essex, and representatives Taft, of Palmer, and Boyden, of Foxboro, dissent. The bill reads:

Section 1. No individual, company or corporation, now or hereafter owning, controlling or operating telephone lines in this state, shall charge for the use of a telephone except as follows: In cities having at the last census a population of 100,000 and over, a sum not exceeding $6.50 per month shall be charged; if less than 100,000 and more than 50,000, not exceeding $4 per month, less than 50,000 and more than 10,000, $3.50; towns of less than 10,000, $3.

Sec. 2. Any person or corporation violating any provisions of this act shall be deemed guilty of a public offence, and on conviction shall be fined a sum not exceeding $25.

Sec. 3. This act shall take effect July 1, 1887.

The managers of the West End railroad, who control also the Cambridge railroad, have decided to run an electrical car between Harvard square and Boston. The power will be supplied by the Cambridge Electric Light Co. The car is being built in New York, and will be in use within a month.

J. N. Keller, Genl. Manager of the New England Telephone Co., has resigned. It is understood that he takes a position in the new company, for the introduction of superheated water for heating purposes, which Mr. Theo. N. Vail and others are promoting.

David B. Parker, supt. of the Boston division of the New England Telephone Co., has resigned, to take a position with the American Bell Telephone Co., as special agent; a position made vacant by the death of R. S. Boyd.

BOSTON, May 16th, 1887.

CHICAGO.

The Gas Trust and Electric Lighting.—The Tower System of Overhead Wires in Cities.—Strike at the Standard Electrical Works, Cincinnati.—Increase of Electric Lighting at Zanesville, O.—Western Business Notes.—Organization of the Chicago Electric Club.—Telephone Rate Regulation Before the Legislature.—A Proposed City Tax on Telephones in Chicago.

YOUR readers have doubtless noticed with interest the special press despatches recently sent out from this city, telling of a new monopoly, one to take hold of gas and electricity as the Standard Oil Co. took hold of petroleum, and to be hated and feared as the Standard Oil Co. is hated and feared The current report is that the newly formed Gas Trust Co. has obtained control of all the local electric lighting companies and now has a virtual monopoly of all the gas and electric lights in the city, while statements have been made from the inside, acknowledging that a combination has been formed, and claiming that it is entirely in the way of economy in producing and serving good and cheap light. The negotiations were conducted more or less secretly, but so much has been made public that the matter may be considered intelligently now, and, while it appears that monopoly is probably aimed at and a good start made towards it, yet the outlook is not so black as it has been painted. The facts are that there were several companies here selling gas, not of uniform quality and at different prices, and a Gas Trust Company, with a capital of $25,000,000, took possession of them all, assuming their combined liability of ten to twelve million dollars. Up to the present time, the trust has made no changes at all, so far as consumers are concerned, though its intentions are said to be something awful. When this step had been taken another was made, and with an accompaniment of newspaper warnings and gossip of the wildest description. An electric light company was organized and incorporated under the name of the Chicago Arc Light and Power Co, $1,000,000 cash capital, the Gas Trust men at the head of it. The first thing it did was to get control of the Chicago Sectional Underground Co., with its valuable franchise and its seven and a half miles of conduit, and then it began to gather in the electric light plants whose wires run in the conduits. Up to this date it has purchased three Thomson-Houston plants, embracing 404 lights, and the Wunder & Abbott plant, consisting of 284 Ball lights. A Western Electric outfit of about 260 lights should also be mentioned in this connection, as it belonged to the Lake Gas Co. and passed into the hands of the Gas Trust Co. at the time of the consolidation. Out in the cold, we find large central plants of the Western Electric, American, Sperry and Schuyler systems, together with a host of isolated plants, so that the statement so freely made, that all the electric light systems of the city have been purchased, is something of an exaggeration, or, it may be, very premature, for counting the lights rented from central stations, something over one-half of them are now in the hands of the Chicago Arc Light and Power Co., and that is all at present. The men in the deal are strong Chicago business men, and we venture the opinion that if they take hold of the business as it is expected they will, build large central plants and supply such lights as are required for street lighting and commercial purposes, the result will be good for the city. There appears to be little chance for an oppressive monopoly, as there are plenty of electric light outfits in the market and plenty of power here to run them, and, moreover, the conduits in the streets are open equally to all, the city franchises expressly forbidding unjust discrimination.

There are more ways than one of running lines in cities, and where it is impracticable to go underground the tendency is to go upwards. In New Orleans, in March, a city franchise was granted, giving the right for fifty years to erect in the streets a system of towers or supports for the purpose of carrying all wires and cables, whether for telephone, electric light, telegraph or other electrical purposes, under the supervision of the commissioner of public works, the lower wires to be not less than ten feet above the roofs of the buildings near which a tower is located. The system to be used is that invented by Colonel Flad, of St. Louis, and it is highly recommended by all electricians who have examined it. The following comment is from a late issue of the *Western Fireman*:

The overhead wire problem has always been a serious one in every large city. For years the wires have been tolerated as a necessary evil, and as time has gone on the poles have become more and more numerous and unsightly, and the network of wires has become more and more intricate, an eyesore to the general public a menace and a hindrance to firemen, and a superadded element in increasing the fire hazard. This evil is no longer a necessary one in cities whose physical possibilities and enterprise enable them to go ahead and bury their wires out of sight, discarding the poles, and removing the whole trouble at one thorough sweep. This has been done in Chicago to a great extent, and successful experiments in other cities show that it is possible there. In New Orleans, however, as well as other cities on the bayous and gulfs of the South this course is impossible, on account of the impracticability of digging for the conduits. Even were these successfully laid, there would still be constant trouble from floods and moisture. It therefore became necessary to devise some other plan to remove the wires from where they would be a constantly recurring obstacle in the way of the fire department. The New Orleans firemen have again and again been hindered and annoyed by the overhead wires which have prevented the raising of their ladders, and have thus kept them from the seat of the fiery enemy in many instances. The scheme which will soon be adopted in New Orleans, and probably also in other cities similarly situated, contemplates a series of high towers to be placed at intervals, provided with means of easy access, and high enough so that the wires

Digitized by Google

will be strung far above the tops of the highest buildings. The main towers are to be not less than 300 feet apart, and will be so slenderly fashioned as not to obstruct the view to any appreciable extent. The illustrated account of these appliances, as published in the *Item* of New Orleans, gives some of the details of the scheme as follows:

"Not only the main towers, which are not to be less at any point than 300 feet apart, but the centre supports, will carry stand-pipes, with hose and nozzle attachments, permitting copious streams of water to be poured down upon adjacent buildings in the most effective manner possible. In addition, a light but staunch staging, that folds up at the side of the tower, may be let down so as to enable firemen to enter the upper stories of adjacent buildings or upon their roofs when it is desirable to run a lead of hose over housetops to some central point in the block. Windlass, or block and tackle, can be provided to expedite the hoisting of hose to the higher galleries for such a purpose. * * * * * * * * * *

"The towers will contain separate sections for the use of the telegraph, telephone and electric light companies, each company's wires to be isolated, as well as thoroughly insulated, yet of easy and safe access at all times to workmen. * * * New Orleans has solved the problem of conveniently and safely conducting the enormously accumulating electric wires in cities. The cost as compared with such devices in the way of underground conduits as have so far been devised is small; the electrical and mechanical obstacles are reduced to a minimum; they are in no appreciable degree a street obstruction, while they ought at once to reduce insurance rates by reason of the facilities afforded in case of fire—to say nothing of that higher reason, which appeals to every heart, the additional safeguard to human life."

The labor agitation during the past year has probably troubled almost every other class of manufacturers more than the electrical. We have heard of imperious demands of walking delegates, but do not know of any case before this month where an electrical shop has been closed by a strike. We refer to that of the Standard Electrical Works of Cincinnati. Their men all went out on Monday, the 6th inst., and work has not yet been resumed. The trouble, as we understand it, is that the workmen demanded a full day's pay for half a day's work each Saturday, the officers of the company naturally refusing to accede, although placing themselves in an embarrassing position, through the disturbance of their large business. The Standard Electrical Works make a specialty of the Hess guest call and fire alarm system, and have turned to good account the services of their apparatus at the recent disastrous hotel fire in Buffalo.

We notice that the city council at Zanesville, Ohio, have ordered 98 new electric lights for their streets, in addition to their old contract for about 30. Zanesville's experience is like that of a number of other cities that we could name—first, gas-light, then gas with a few electric lights by way of experiment, followed by almost exclusive use of the latter light. The tide seems to be running strongly in this direction.

The Standard Underground Cable Co., of Pittsburg, have issued a new and attractive edition of their cable circular, illustrating and describing the different kinds of cable that they furnish. Mr. F. E. Degenhardt, manager of their western sales department, reports sales of 10,000 feet of 100 No. 22 conductor cable to the Missouri & Kansas Telephone Co., and 2500 feet of 150-wire cable, No. 20, to the Ohio Valley Telephone Co.

The Western Electric Co. have leased from the Western Union Telegraph Co. a special wire for direct communication, a part of each day, between the offices of the company at Chicago and New York. It is reported that this company will soon build a $20,000 addition to their large factory. They report among recent large orders, multiple switch-boards for Chicago, Buffalo, Providence and Allegheny City; electric light outfits for Zanesville, Roodhouse and Salina, and Patterson cable for the Chicago Telephone Co., 26,000 feet, and for the Central District & Printing Telegraph Co., 16,000 feet. The Chicago switch-board will go in the new building described in your columns last month, and will be one of the largest multiple boards in the world.

Holmes, Booth & Haydens and the Sprague Electric Railway & Motor Co. have opened offices at 185 Dearborn street, for the sale of their specialties. Mr. C. M. Barclay will represent the Sprague company, and Mr. J. L. Barclay, Holmes, Booth & Haydens. The Telemeter Company have given their western agency to the Electrical Supply Co., and the C. & C. Electric Motor Co, will sell through the Central Electric Co.

The John A. Roeblings' Sons Co., of Trenton, who draw a good deal of the line wire used in the United States, have an establishment in Chicago, and are represented by Mr. George C. Bailey. They expect to remove on or about the first of June to Nos. 171 and 173 Lake street. This property, consisting of a lot 40x180 feet, with the four story stone front building on the south side of Lake street, running back to a court, was purchased by them lately and will be occupied by them for business purposes.

The Chicago Electric Club has been organized and incorporated by the following gentlemen, all of whom are well-known in the electrical field, Chas. J. VanDepoele, B. E. Sunny, Joseph Uhrig, F. S. Terry, Chas. A. Brown, W. J. Buckley, Aaron K. Stiles, W. J. Armstrong, W. A. Kreidler, F. G. Beach, J. P. Barrett and Chas. D. Schain. The objects of the club, as stated in the incorporation papers, are the promotion of social intercourse, the diffusion of knowledge in electrical matters, and the erection of a club house.

There are bills in both houses for regulating telephone charges in this state, but the time before adjournment is short, and it is not likely that action will be taken. The most interesting thing in the way of special legislation is the effort in the city council to impose a license fee upon the Chicago Telephone Co., the amount to be $25.00 per telephone. Such an ordinance was introduced in the council and was referred to the committee on licenses, who have reported in favor of its adoption. The committee found that Chicago gets nothing from its telephone company, while St. Louis collects 2½% of the gross earnings, with $5.00 additional for each pole. Suppose the aldermen and the legislators at Springfield pass the proposed bills, that is to say, reduce the maximum charge to $36.00 and then tax it $25.00 for license, the Chicago company would have left $11.00 per annum per subscriber. This would be $11.00 better than nothing.

CHICAGO, May 19, 1887.

LETTERS TO THE EDITOR.

Notice to Correspondents.

We do not hold ourselves responsible for the opinions of our correspondents.
Anonymous communications cannot be noticed.
The Editor respectfully requests that all communications may be drawn up as briefly and as much to the point as possible.
In order to facilitate reference, correspondents, when referring to any letter previously inserted will oblige by mentioning the serial number of such letter, and of the page on which it appears.
Sketches and drawings for illustrations should be on separate pieces of paper.
All communications should be addressed EDITOR OF THE ELECTRICIAN AND ELECTRICAL ENGINEER, *115 Nassau Street, New York city.*

PATENT OFFICE EXAMINATIONS.

[69].—The American patent system, so-called, is a failure. I am well aware that this statement will strike the average patentee with startling effect somewhat similar to the effect of a flash of lightning in a clear sky. Nevertheless I believe it is absolutely true. Many years have I studied this matter - and have carefully read not only the American side, which I believe has only been printed in the United States—but I have also carefully studied and considered the arguments and statements of facts as they have appeared in the Common's Committee of the British Parliament for the years 1829, 1857, 1865, 1871, 1872, the report of the Patent Law Committee of the British Association, and of many British and European writers. These British and European authorities throw a flood of light indirectly on the question now under consideration. I mean by the American patent system—the system of granting patents to inventors only after a preliminary examination into the patentability of the invention by clerks (called "examiners") of the patent commission. These *ex parte* contests to obtain a patent (including interferences and all other patent office proceedings, of course), now not rarely mount up to so high a figure as to actually rival—and often surpass—the enormous and extravagant costs of infringement suits in the United States courts. And when the actual test comes of the validity of the patent in an infringement suit before a Federal court—all these costly patent office contests are of no value or authority whatever. The whole ground must be fought over, inch by inch, just as though there had never been any contest over the same issues in the patent office. Before 1836, in this country, patents were granted to inventors on their making a formally proper application for a patent, and paying the government fees—just as it is now and always has been, substantially, in all the rest of the world. Our so-called American patent system by patent office examination dates only from the law of 1836. I need not say that in these patent office contests—as also it is well known in the Federal courts—it is "*The last crown piece that wins*"—as the French emperor said about the contest with the allies. As a patent cannot be said to have any money value (except a chance to fight in a United States court) until it has been at least once judicially declared to be valid by a federal judge—it is a puzzle to know of what possible use to an honest and meritorious patentee—these interminable and costly patent office proceedings can be. When the money bags come in behind an inventor, real or pretended, then the contest in the patent office is only to ascertain who has the longest purse. The bribery, corruption, favoritism, and general rascality that has too often been practiced in the patent office during the last two decades are too well known to require any extended reference here. This preliminary examination in the patent office serves to perpetuate and strengthen the very general belief among inventors and patentees that a grant of a patent monopoly by the government of the United States, is a guaranty of some sort by the government to protect the inventor in the enjoyment of the monopoly of the claims of the patent. Else, they argue, why does the government take so much pains to carry on these hotly fought contests in the patent office? When the owner of the patent actually "gets it through his hair" that a patent is no guarantee whatever of anything by anybody except that it gives the patent owner a chance to carry on an infringement suit, at his own expense, in a court of the United States, with the chances finally against him in the Supreme Court of the United States—he has become possessed of the knowledge of a wonderfully valuable "chunk" of patent law.

To be brief, is it not worth while for the inventors of the

Digitized by Google

country to consider the matter of inducing Congress next winter, to abolish these patent office contests, and to go back, substantially, to the system of granting patents in this country before 1836—as it is now and always has been in the rest of the world? There would be no chance then for a worthy and meritorious inventor to lose his patent in the interest of a rich and unscrupulous rival.

JOHN MC CLARY PERKINS.

Boston, Mass., May 11, 1887.

ELECTRICAL NEWS AND NOTES.

AMERICAN INSTITUTE OF ELECTRICAL ENGINEERS.

ANNUAL MEETING, MAY 17TH, 1887.

THE meeting was called to order in the rooms of the American Society of Civil Engineers, 127 East 23d street, New York, at 8.45 P. M., by the President of the Institute, Mr. Frank L. Pope.

The President—We have met this evening to hold the fourth annual business meeting of the Institute of Electrical Engineers, for the election of officers for the ensuing year and the transaction of any other business that may come before the meeting. The first thing on the order of business is the reading of the reports. The secretary, I think, has his report ready.

On motion of Capt. Michaelis, duly carried, a nominating committee was appointed to present names for the offices to be filled for the ensuing year.

The President appointed as such committee, Capt. O. E. Michaelis, Mr. G. M. Phelps, Jr., and Mr. J. Wetzler.

The Secretary, Mr. R. W. Pope, then read his annual report as follows:

SECRETARY'S REPORT.

As the Institute is about entering upon its fourth year, it appears to be an appropriate time to review its record, examine the field of its operations, and prepare for extending its usefulness in the future. The reasons for its existence are more apparent than they were three years ago. While all of us realized at that time, that electrical industries were in their infancy, the importance of scientific training was not appreciated as it should have been. It is now generally admitted that the best commercial results can be obtained in the electrical field by following out scientific theories, especially where they have been confirmed by practice. If we have learned all there is to be extracted from the study and practice of electricity, the Institute has no mission. If, however, we are progressive, and desire to obtain further knowledge of the art as we perform our various duties in this growing field, then we should not only continue the good work we have undertaken, but seek to extend the usefulness of the Institute by bringing to its support all who are in any manner interested in the various applications of electricity, and are desirous not only of profiting by the experience of others, but are willing to contribute their own ideas for the benefit of their fellow members.

The Institute having now apparently passed the critical period in its existence, and attained a recognized scientific standing at home and abroad, far in advance of all other strictly electrical associations in the country, membership in it is correspondingly appreciated. It is the only association, national in its character, which brings into the arena of discussion all branches of electrical research, and it may be added that in none of them are such subjects so thoroughly and intelligently treated, and so accurately recorded, and published for the information of absent members, as well as for future reference. To build up such an organization, to secure the active support of patient, zealous workers until it attains full recognition as a worthy public institution is a difficult undertaking, and that we have reached our third anniversary with bright prospects for the future is a very encouraging fact.

Two previous reports have directed your attention to the importance of holding more frequent meetings, in order to awaken and maintain interest in the welfare of the Institute, which it was feared might lose ground unless opportunities were offered for occasional gatherings during the year. Acting upon these suggestions, four meetings have been held since the 18th of May, 1886. The proceedings of these meetings were very fully reported in the electrical journals, and were also copied in foreign electrical periodicals. They have been beneficial to the Institute in various ways, and it is to be hoped that our members will contribute during the coming year a sufficient number of papers to enable us to hold at least eight similar meetings.

Nothing whatever has been accomplished toward securing permanent quarters, and this is, perhaps, the most serious obstacle which remains to be overcome. The continued courtesy of the American Society of Civil Engineers, in granting us the use of their rooms for our council and general meetings, while most heartily appreciated, does not satisfy the natural desire for a home of our own, and until this end is attained, it is hardly possible that the full benefits of organization can be realized. The present condition of our affairs is such, that I believe a much better showing may be made during the coming year, and I see no reason why we should not move forward with confidence toward attaining that most desirable achievement in the history of any similar society—a permanent record of scientific papers and discussions of which every member should be proud, based as it is, upon the intelligent researches of its supporters.

Respectfully submitted,

RALPH W. POPE,
Secretary.

New York, May 17th, 1887.

On motion the secretary's report was received and ordered printed in the transactions.

The President—The list of members shows a healthy and continuous growth. I think we may congratulate ourselves on the interest that is being taken by the electricians of the country in the prosperity of the society, which is evinced in the best possible manner by sending their names in as candidates for membership, and we may congratulate ourselves also on the quality of the new accessions as well as upon their number.

We are now ready, I believe, to proceed to the election of officers, and Capt. Michaelis will read the report of the nominating committee.

Capt. Michaelis—The committee appointed to make nominations have availed themselves of information received from members. There has been discussion of the subject of filling vacancies during the past month—ever since the last council meeting—and their prompt action is due to the fact that they were well informed in regard to the wishes of the members, and in suggesting names they have not probably strictly followed the idea which is the basis of our constitution with regard to geographical distribution, but they felt that during the early years of the society it would be well to have on the board of managers, men who could attend its meetings and be active in forwarding the interests of the Institute. In regard to one nomination, in which the feeling was unanimous, they are sorry to have to report that they could not meet the unanimous wishes of the members they have come in contact with during the past month, and that is in regard to the office of president. It has undoubtedly been the wish of every member of this society that our present distinguished president would be willing to accept another term; but he has positively declined notwithstanding all influences that were brought to bear upon him. He will not accept the office again, and his reasons are mainly based upon what he considers the best interests of the society. In the first place he desires to establish the precedent that there should be rotation in office, and that one term is sufficient; but I am glad to say that he has consented to permit his name to be used as a candidate for vice-president. The committee have therefore nominated for the office of president a gentleman than whom there is no other who has shown more interest in our progress, who has done more for us; we nominate for the office of President, Mr. T. C. Martin; for Vice-Presidents to fill the full term of two years, Mr. F. L. Pope, Col. R. R. Hazard, and Prof. W. A. Anthony; for Secretary—it is needless to state the committee's nominee—our present incumbent, whose able report we have just listened to with great pleasure, Mr. R. W. Pope; for Treasurer the committee has transferred one of the managers of the Institute—as the present treasurer has been promoted to be vice-president—we nominate (two of the committee do at least) to that office, Mr. George M. Phelps, Jr.; for Managers, Mr. Schuyler S. Wheeler, Joseph Wetzler, A. C. Fowler and William Lee Church.

No other nominations being made, the gentlemen named by the committee were in due form elected to the positions named respectively.

The vacancies arising from the resignation of Mr. T. D. Lockwood, as vice-president, and the transfer of Mr. G. M. Phelps, Jr. to the treasurership, were filled by the council who appointed Prof. Elihu Thomson, Vice-President, and Mr. E. P. Thompson, Manager.

The President—We are now ready for any other business.

Mr. Phelps—I have a resolution to offer. We have all heard in the able report of the secretary the remarks which he has made in respect to our want of a habitation, and the fact that we are still indebted to the kindness, but at the same time charity, of others for a roof over our heads when we get together. It is not disagreeable to come to the house of the Civil Engineers; it is always a pleasure, but at the same time we would all be happier and the society would be more useful if we had our own roof; the desire for that is very general, and some of us are of opinion that we are better able to accomplish something in that line than we have thought we were, if we would really put our hands to it and undertake it seriously; and with the view of having it done at once, I would offer a resolution in hope that it will bring out an expression of opinion and a favorable vote.

Resolved, that in view of the general interest evinced for three years past by members in proposals for some permanent quarters for the Institute, a committee be appointed at this meeting to report at the meeting to-morrow on the best plan to be adopted and the sum necessary for the purpose named.

The resolution was adopted.

Digitized by Google

The President—I will appoint on that committee Mr. Phelps, Mr. Martin and Mr. Hamilton.

On motion, duly carried, the following resolution was adopted:

Resolved, that the council be instructed and authorized to proceed to incorporate the Institute under the laws of the State of New York, appropriate to such society, and with power to designate from their own number a Board of Trustees.

Mr. Wheeler gave notice that at the next meeting he would offer the following amendment to the rules.

"The council shall have power to elect juniors who have been engaged in electrical or cognate interests for one year or more. These juniors shall not have the privilege of voting, but shall be entitled to be present at the meetings and take part in the discussions. They shall be required to pay one-half the initiation fee and five dollars annually, with one copy of the transactions, or three dollars annually without."

An informal discussion of the measure proposed by Mr. Wheeler, followed, eliciting a very general inclination to adopt some appropriate method of extending the advantages of the Institute to students and beginners in electrical work.

The President—I would say that the English Society of Telegraphic Engineers and Electricians, of which I have been a member almost from the beginning, has a class of membership of that kind designed for the same purpose that we are trying to accomplish. I do not recollect precisely what the regulations are, but of course that can be considered with other matters that will come up for discussion. That class was established after the society had been in operation some five or six years, and evidently was intended to supply a need which had manifested itself.

Capt. Michaelis—At the request of several members I desire to offer the following resolution:

Resolved, That the Institute desires to place upon record its appreciation of the services rendered by its retiring President, Mr. F. L. Pope, and its regret that he has deemed it for the best interests of the Institute to decline a unanimous tender of re-election.

The President—I thank you very much, gentlemen, for your kind appreciation of my services. They have by no means been what I would like to have made them. But circumstances have prevented my being in attendance at a great many of the meetings. I have always endeavored to be on hand when I could. I am sure that you will find that you haye not made an unprofitable exchange in the worthy successor that you have elected for me, and I feel sure that we shall all pull together, and make Mr. Martin's administration the most successful and prosperous one that the Institute has yet seen.

The meeting then adjourned.

GENERAL MEETING, MORNING SESSION, WEDNESDAY, MAY 18TH.

The meeting was called to order at 10.45 A. M., by the retiring President of the Institute, Mr. Frank L. Pope.

Mr. Pope delivered the following address:

Members of the Institute and Gentlemen:

In bidding you welcome to the Fourth Annual Meeting of the Institute of Electrical Engineers, it affords me much gratification to see such a large and representative attendance, and to note the evidently increasing interest manifested by the electricians of the country in the welfare and prosperity of our organization.

The year which has elapsed since our last annual meeting has proved one of unusual prosperity in all branches of legitimate business having to do with the manifold industrial applications of electricity. Without exception, so far as I am aware, the manufacturers of electrical machinery, apparatus and supplies are all fully employed; some of them are working overtime, and many of them have in contemplation or actually in progress extensive additions to their facilities.

While rapid development, enlargement and extension seems to be at present the rule in every department of the science and art which we as an organization especially represent, it may not be amiss to refer to the exceptional progress which has been made in certain specific directions since our last meeting. Among these may be mentioned the transmission and distribution of mechanical energy through the agency of electric motors, and especially the application of these to minor branches of manufacturing in large industrial centres, and to the propulsion of street railway cars; the largely extended employment of accumulators or storage batteries for the lighting of buildings and of railway passenger cars; and the introduction of long-distance incandescent electric lighting, which has at length, apparently, been made both practicable and profitable by the employment of alternate currents and induction apparatus. Last, but not least, should be mentioned the new art of welding metals by the aid of the electric current, which seems likely to occupy a vast and immediate field of usefulness, and to create numberless new industries, to say nothing of revolutionizing some of the existing ones which have come down to us almost unchanged from the days of Vulcan and of Tubal Cain.

I am sure that it will be a source of gratification to you all to learn that the prosperity of the Institute of Electrical Engineers has kept fairly abreast with that of its members and co-workers in their individual and professional capacities.

The series of monthly meetings, each preceded by a dinner, which have been held in this city during a portion of the past year, have proved to be most successful and enjoyable reunions, and have certainly done much to strengthen the Institute, by increasing the interest of non-resident members as well as of those residing in the more immediate vicinity of New York.

Several exceedingly interesting discussions which have taken place at these meetings have been reported in the professional journals on both sides of the Atlantic, and thus the information brought out has been made available to the profession generally. It is proposed to continue this commendable innovation during the coming year, and I have no doubt but that it will henceforth become a permanent feature of our proceedings.

The courtesy and liberality of our much esteemed sister society, the American Society of Civil Engineers, has enabled us to enjoy for another year the hospitality of the convenient and comfortable rooms in which we are now assembled.

While I feel sure that every member of the Institute appreciates to the fullest extent, the value of the assistance which has thus been rendered to us as a society in the days of our youth and feebleness, yet in the judgment of some of our most esteemed members, the time has arrived when we may feel justified in making a determined effort to secure adequate, commodious and convenient headquarters of our own. Within a day or two past a movement has been set on foot to raise the necessary funds to carry out this project in a fitting manner, and I am more than gratified to say, with excellent prospects of success. The undertaking will be presented to-day in a definite form for the consideration of the members, and I feel certain that each and all of you will individually do everything in your power to insure its early and complete success. It is hardly necessary to say, that the establishment of the institute in a building of its own, equipped with a library, reading room, and perhaps, ultimately, with an experimental laboratory, will give us a standing second to that of no other institute in the world devoted to a special branch of art or science; it will directly benefit every industrial enterprise in the country, having to do with electricity; it will increase the confidence of capitalists in the importance, remunerativeness, and stability of electrical enterprises, and will in every possible way be of the utmost advantage not only to our own members, but to all who are in any way connected with electrical enterprises. I trust, therefore, that my successor in the honorable position of President of this Institute, may be enabled to signalize his administration by the completion of this most desirable undertaking.

In conclusion, I desire to tender my acknowledgments to the officers of the Institute and the members generally for their kind and hearty co-operation in carrying on the affairs of the organization during the past year. (Applause.)

Gentlemen of the Institute, it gives me great pleasure to introduce our President for the coming year, Mr. T. C. Martin, of the *Electrical World*, who is well known by reputation to you all.

Mr. Martin then took the chair as President of the Institute, and read the following address:

Fellow Members of the Institute:

Your action last night, placing me next in succession as president to so distinguished an electrician as Mr. Frank L. Pope, and so soon after Dr. Norvin Green had occupied this chair, is one that only the results can justify. Although my connection with the Institute dates back to its foundation, and although in the three years of its existence I have been afforded the opportunity of participating in its management, I cannot venture to regard your decision as entirely personal. I would interpret it rather as a generous recognition of the fact that the Institute has still the larger part of its initial work to do, and that that work must be carried out chiefly by the younger element, which constitutes an ever increasing part of the membership. For this great honor, and for this sign of your confidence, my thanks must, therefore, find their best expression in what the Institute achieves during the current year.

We stand to-day at an important stage in electrical investigation and development, and yet it is not given us to see or to say what will be its position in the long vista or perspective stretching through the second half of the present century. As Dr. Priestley reflected one hundred years ago: "It may be said that there is a *ne plus ultra* in everything, and therefore in electricity. It is true, but what reason is there to think we have arrived at it?" Priestley was of those who were permitted to gaze afar off at untrodden fields of discovery, but who did not enter in. To-day the evidence of what has been achieved tells us that the greater lies before. The time is one, in fact, when science, and such a department of it as ours, offers to the more adventurous and inquiring spirits the rewards that were once mainly to be found in geographical discovery and in the prosecution of trade, but which are wanting now when even the interior of Africa has been traversed, and when commerce is carried on at apparently a diminishing rate of profit to capital. The electrician has gained, meanwhile, a foothold on the Atlantic seaboard

Digitized by Google

of his new continent, and, subduing a wilderness of theory, speculation and doubt, has already gained some of the noblest provinces that ever rewarded the industry and the genius of man. But beyond him lie the ranges of distant mountains, and westward of their peaks is the territory out of which he has yet to carve a score of states unnamed. Toward that great west of his science the electrician advances, and even now he has the first fruits of exploration. But while there is this onward movement for the pre-emption and occupancy of virgin soil, we see going on an equal development in the realms already won, invention being heaped on invention, and improvement added to improvement. Speaking as one who had witnessed this change, Dr. Werner Siemens said recently: "We still remember the time when we listened with incredulous wonder to the strange fairy tale that the mysterious new force, electricity, could transmit messages with lightning speed across whole continents and the oceans which divide them; and that this same agent could precipitate metals in a solid form from their solutions, and change night into day;" and yet, as he went on to point out, this is not less the time "when the world-encompassing telegraph no longer suffices for the needs of intercourse, but must give place to the transmission of oral messages by the telephone over distances, in comparison with which the natural range of the human voice appears as nothing; when the latest fruit of the union of science and technology—electro-mechanics—in its rapid development, offers to mankind ever new and immeasurable fields for the investigation and utilization of the natural forces."

We are dealing, however, with the immediate present and have to keep pace with such a rapidity of achievement that our plans each day have to be adjusted to larger conceptions and wider horizons. The position was admirably described this month in a leading magazine by Mr. G. B. Prescott, Jr. "The improvements of methods," he said, "the refinement of machines and appliances, and the bringing of science down to daily work and business, moves on so swiftly that the new machine, or the new one of a year ago, is already old. The reduction of refractory ores in electric furnaces, where immense carbons, fed by the largest dynamos in the world, give a heat never used before, excited world-wide wonder only a few months since. Even the very recent railroad accident in Vermont has created a demand for storage batteries for lighting lamps in cars that is so active that every railroad shop in the land is examining new accumulators. Never in the history of any business was there such an eager desire to obtain new machines, new tools, and new methods as in the manufacture of electrical apparatus." This is well put. In fact, the electrical statistics of to-day are nothing short of colossal. To go no further than our own country, we find an investment and capitalization in simply the leading electrical industries—telegraphy, telephony, electric lighting, and electric power—of a sum of, at least, $350,000,000. There are in America about 700,000 miles of telegraph wire. Last year 820,000,000 telephonic conversations were held. Over 150,000 arc lamps, and incandescents, verging on 1,000,000, now instruct the public eye that the electric is the light before which all others must pale their ineffectual fires. At least 10,000 electric motors are employed in the most varied industries, and while the electric railways here are carrying passengers at the rate of more than 3½ millions annually, the extraordinary increase now going on in that branch promises that the figures will be doubled within the year, with at least from 50 to 75 electric roads in operation. When to these figures we add the thousands of dynamos and vats used in electro-plating, the countless electric appliances used in medicine, surgery, and the miscellaneous arts, and the endless variety of electric apparatus for convenience, safety, protection and comfort in the house, office, train or hotel, we arrive at sum totals dealing with which a statistician needs all his ability to mass and classify. It is no exaggeration to say, moreover, that in the electric industries, hundreds of thousands of our most intelligent citizens of both sexes find remunerative and agreeable occupation; nor is it an exaggeration to affirm that at a time when all great departments of manufacture must depend for success on the degree of technical culture and skill displayed in them, none rests on a more strictly scientific basis than ours.

Where in the midst of all this activity, where in a sphere of so much outgrowth, onlook and uplift, do we find the Institute? That is the question for us to answer. The Institute has in its three years of life done good unobtrusively, but it is not discharging its responsibilities nor carrying out its mission to the full. Our fellowship, though growing rapidly from among those already active in electrical pursuits, must be greatly enlarged to embrace the constant accessions to the electrical ranks. Cornell University alone has now 59 students in electrical engineering, and those young men as they enter on practice feel the need of association with the men already at work. Stevens Institute is sending out numbers of capable electricians, and but the other day I had the pleasure of meeting the zealous and enthusiastic "electricals" of the Massachusetts Institute of Technology. For all of them, and many others, we must provide a place in our membership.

But with an expansion of the Institute must come, as my predecessor, Mr. Pope, said last night, proper accommodation for the books, apparatus, portraits and documents of the Institute, fitting quarters for the secretary, and a place to preserve the numerous relics and mementos which are to be given us, but now lie dusty and neglected and widely scattered. The Institute must have a local habitation as well as a name. It should also, as suggested in a resolution adopted by you, be incorporated at as early a date as possible.

Another matter of importance is the strengthening of the ties of friendship between the Institute and kindred societies at home and abroad. We have here no end to serve but the promotion of science and industry, and to that end we are endeavoring to devote our energies with singleness of aim and purity of purpose. I would be glad to see steps taken so that any member of electrical bodies abroad shall be entitled, while in America, to enjoy all the facilities and resources of the Institute. I would esteem it a great privilege to be in any way instrumental in more closely uniting the organizations here at home. I may particularly mention, in this respect, the New York Electrical Society, which, though local in work, is the oldest of the kind, and has made a most creditable record. The feeling toward us on the part of that society is heartily kind and fraternal, and I do not see why the two bodies cannot be brought together, and, perhaps, by compromise and mutual concession, benefited in a close union. The first approaches have, indeed, been taken in the membership enjoyed by a great many of us in both organizations.

I might touch on other topics, but can close by one remark including them all: We have our work as a national Institute to do. It lies ready to our hands. It may not be easy of accomplishment, but at least the effort can be made, and we have it in our power to render the Institute more influential, more representative, more helpful. (Applause.)

The President—We have one or two papers here from members not present, which are in the secretary's hands and which might be taken up immediately. We will, therefore, have the paper by Mr. E. P. Roberts, of Cheyenne, on "Practical Experience with Storage Batteries," an important topic, and one which deserves the most careful attention of the members. The secretary will now read the paper.

Mr. R. W. Pope, Secretary—Mr. Roberts omitted sending a title for his paper, so I took the liberty, as an old newspaper man, of putting on a title myself—"Storage Batteries in Practice."

Mr. Pope then read Mr. Roberts's paper. (See page 224.)

DISCUSSION.

The President—The paper is now open for discussion by the members and others present. Mr. Roberts's work has gone, it seems, through a considerable evolution, and has got to what we may term the elementary basis. This subject was brought somewhat prominently before the National Electric Light Association at its recent meeting in Philadelphia, and I think we have more than one member present who will have some very pertinent and valuable views to express with regard to that particular development. If I might venture to call upon any of the members, I think Mr. Mailloux is very much interested in this subject at the present time.

Mr. Mailloux—Mr. Chairman and gentlemen: It is true that I am much interested in electrical storage. At the same time it does not necessarily follow that I know much about it. I was very much interested in the paper prepared by Mr. Roberts, and I quite agree with him that the most promising method of employing storage in lighting large areas will be by means of a series of groups of batteries suitably located with regard to the distribution of light over certain districts and supplied from a central station.

It is possible to so arrange matters that we can send energy from the central station to the various groups at a high potential, and thence distribute at a lower potential, saving copper in the conductors for carrying the energy and getting the benefit of distribution at a low potential. In nearly all instances it is found impossible to place the charging station in the centre, or equally distant from all the various groups. Usually it is found cheaper to buy land on the outskirts of a town and to establish a central station there. In the case of incandescent lighting, the idea of distribution by different sets of feeders has been adopted, and in some cases with a marked economy in the cost of conductors. I have in mind the case of a person interested in electric lighting who submitted to me some data regarding an installation in some city in Pennsylvania, where he obtained an economy of over twenty per cent in the case of omnibus wires or feeders for the mains, by adopting the plan of distributing the energy in fractions to those mains, so to speak, instead of using one set of feeders to distribute the energy to the main,—a set of feeders of large diameter—he found that he could save copper by using distinct sets of feeders of smaller diameter and striking the mains at points more favorably situated with respect to the particular groups of lamps. In this way, having divided the total number of lamps into groups on the map of the city, he was enabled to lay out his conductors, and that is exactly what it is proposed to do with the storage battery. I do not think that it is as yet the ideal system. It is far too young and full of deficiencies to compare with the systems that have been in use for four or five years,

Digitized by Google

with very able men studying their deficiencies and seeking to remedy them. But from what I know of the case I think that I can quite heartily sympathize with Mr. Roberts in his tribulations —I have no doubt he had quite enough of them; but I think if he had seen some of the more improved forms of battery that are now in the market, perhaps his labors would have been materially lessened.

The President—This point of the utilization of storage batteries in central stations was alluded to with some degree of prominence by my colleague Mr. Wetzler at Philadelphia, and I think that some of the figures that he then presented would be extremely pertinent on the present occasion. There also comes in the use of storage batteries in connection with the telegraph, which I think is very important and material. We have the precedent in England, and Mr. Hamilton has given that subject, I believe, some consideration here.

Mr. Wetzler—On the occasion that the president refers to, I brought out the fact that a company had been started at Haverford, Pennsylvania, to run an electric light station and to have an auxiliary storage plant, The idea was this: It is conceded that the maximum number of hours for lighting probably does not exceed four or five for incandescent lighting. During the remaining time an incandescent station is practically running much below its capacity. Now the argument was that if they could put in a number of engines, dynamos and boilers which could be kept running practically twenty-four hours, there would be a great saving in cost of installation and operating expenses. The way in which that was to be accomplished was by the installation of storage batteries. They have a certain number of dynamos there which they keep running, I believe, some twenty hours during the day, and during the time the current is not used directly from the dynamos it is stored in the batteries and drawn upon as occasion may require. I believe there are some 600 or 1200 cells now in operation, and I understand too that the distribution to individual houses has also begun, that is, placing a battery in each house. What the success of that station is to date I do not know, but I shall make it a point to inquire at the earliest opportunity.

The President—I think we would all very much like to hear Mr. Hamilton on the point to which I alluded.

Mr. G. A. Hamilton—So far I have had no experience at all with storage batteries; but I might say that telegraph companies have considered the feasibility of using them, and while they have not arrived at a definite conclusion in regard to them, so far, it seems that the number of cells that will have to be provided will make the plant cost so much that it will be impracticable to use them. The matter is still under consideration, however, and after we have had a little experience with it I may be able to say something on the subject. If we could group the potentials along one after the other, as we do with dynamos, it would simplify matters; but that seems to be impossible, because some of the batteries would be drawn upon much more than others. On the other hand, if we group them up—taking different groups on lines of different resistances—then we would need so large a number of cells that the first cost and the wear and tear of them after a while, would make the whole cost too much for us. So far, the storage battery does not compare at all favorably with the dynamo, for our use. Possibly within the coming year we may be able to say something more definite in regard to it, for it is possible we shall use it to some extent. I do not know what the experience has been in England, but I think they have only used it to a limited extent.

Mr. R. W. Pope—In conversation with Mr. Hamilton I understood that one of the reasons why dynamos were not more generally adopted for furnishing current at the large telegraph centres was because there were very few places where the demand for the current was sufficient to warrant the running of a plant for twenty-four hours continuously, nor when this was done could sufficient economy be gained to make it worth while to change from the primary batteries, ordinarily in use, to dynamos. I would like to inquire from Mr. Hamilton, in connection with this, whether it would not be possible, with the use of storage batteries, to utilize the dynamos in centres where it is not possible now to run them for twenty-four hours continuously? In Pittsburg, for instance, you are talking about putting a dynamo plant there.

Mr. Hamilton—Yes; within the coming three months the plant will be put in there. Wherever we have above 9,000 or 10,000 cells I think it would be advisable to put in a dynamo plant. But I doubt very much whether we could do anything with a storage battery, because we must have four or five different potentials at least, and you have to duplicate them; that would be ten different batteries at once, and then you have got to have a spare afterwards, and at $17, $18 or $20 a cell it is rather expensive.

Mr. Frank L. Pope—There is another application of the storage battery which has not been discussed at this meeting, respecting which I would like to say a few words which may be of interest. A short time since I was applied to by the president of a street railway company, in one of our largest cities, who is about to build a line over new territory about five miles in length, on which it is proposed to run something like twenty cars. He desired to consult me as to the practicability of working the line by electricity, and stated at the same time that there were insuperable objections to the use of an overhead conductor, and that very serious opposition would be made to the use of a conduit, or anything which would occasion the slightest disarrangement of the pavement. He therefore wished me to investigate the problem of running cars by accumulators or storage batteries. In the course of this investigation I examined a car which was being experimentally run on the Eighth Avenue line, in this city, by the Julien Electric Company, and I was very much more favorably impressed with the results attained than I expected, although it was easy to see that better work could be done with accumulators than was being done there. In the first place, like most street railway lines in New York city, the Eighth Avenue line is of the most miserable construction; a construction that would hardly be tolerated on a contractor's dirt road out in the country, and yet these street railway managers, who are using the most costly kind of motive power in the world—horse-power—are misapplying from half to two-thirds of it in battering their tracks and cars to pieces against each other. There is a fine opportunity in this field, it strikes me, for missionary work on the part of our sister society, the Civil Engineers.

To return to my subject, I undertook a careful investigation; I procured some cells and had them put under test by a careful and accomplished young electrician, a member of our society, and from the results attained by him I became quite convinced that it was possible to operate street cars at a cost something less than by horse-power, at all events, and possibly considerably less. It is difficult to get at approximate results theoretically, because no one seems to know exactly what average power is required to propel a street car. The load varies greatly at different hours of the day, and the resistance to traction also varies greatly according to the condition and amount of dirt on the track, whether wet or dry, and all that, and nothing but a series of practical experiments can possibly give us exact results. Nevertheless we were sufficiently encouraged by the results we did get to go on and build a new car, embodying all the improvements we could think of, such as excellent running gear, highly efficient motors, etc., and that car, I hope, will be ready for use within the next month or two. We intend to put this car into actual service among the horse-cars, on an existing line; to carry passengers with it, the same as the rest; and meanwhile to carefully observe the electric energy used, and the power required, and generally to get all the information we can, which, I presume, will be made available for public use when we are through.

I may add that our theoretical investigations have led us to believe that with a number of cells that can easily be put under the seats of an ordinary 16-foot street car, we can run the car something like 50 miles with one charge of the accumulators, which would enable us to do a full day's work of 16 to 18 hours by changing the accumulators once. This, I hope, we shall succeed in doing, and it will afford me much pleasure to report the results of the experiment at some future meeting.

Mr. Mailloux—I would like to make a word of comment on the remarks made by our esteemed ex-president, and it is this: I would submit that he could not run 50 miles with all the kinds of batteries that are now offered for sale, and I think it would be better for the president to say that with some batteries he could run 50 miles.

The President—I presume it is understood we are speaking of the most advanced appliances.

Mr. Frank L. Pope—I assume that one reason why we were employed to investigate the matter was to make sure that the railway company should not get a battery that would run only 25 miles.

Mr. E. P. Thomson—The success of a scheme often depends not only upon the device itself, but upon the man who has the device in charge. Perhaps no man is better acquainted with Mr. Roberts than I am, having roomed with him about three years at the Stevens' Institute, and worked with him in the laboratory one year. After graduating from the Institute he took the position of an ordinary mechanic, for the purpose of thoroughly learning the mechanic's trade, in the tool room in Singer's factory. I happened to work there also, at one time, and the men engaged there told me that they paid a hundred dollars to learn the mechanic's trade, so as to be employed by the Singer factory, whereas Mr. Roberts not only learned the trade, but was paid by the week. Further, he went to a factory for the manufacture of hats in New York, where he was foreman and general manager, and worked very hard and got considerable experience, fitting himself in that way for the practical application of the knowledge of mechanics. He was appointed as electrical mathematician by the United States Electric Light Company, and their success, probably, is greatly due to his designs of dynamos, and other machinery and lamps. At the Swan laboratory he was well known as a man who worked from eight o'clock in the morning to twelve at night. I have letters from Cheyenne, where he has been working right along for a long time, for eighteen hours a day. Having all this experience, and knowing

Digitized by Google

also that Cheyenne is the place where the electric light has been attempted to be run by a storage battery, and knowing that Mr. Roberts has had such experience, we are justified in saying that in this case the failure was not due to the man. Mr. Roberts is also an inventor, and he has probably been able to make up for defects in any details of construction, and so get the best possible results from the batteries in his charge.

The President—I was very glad to hear Mr. Thompson speak so highly of Mr. Roberts, and I think that Mr. Roberts deserves our hearty sympathy and consideration for his frankness in speaking on these topics, and for the readiness with which, from so distant a point, as Cheyenne, he sends us papers and brings his work to our notice and looks to us for encouragement and information with which to develop his work in the future.

Mr. Thomson—I would add that Mr. Roberts was regarded by the Brush-Swan company as the best man they knew of in the United States to take charge of the works at Cheyenne. He was paid a reasonable salary, and I know personally that they looked around for a great many men and tried several men before they succeeded in obtaining just the man they wanted in Mr. Roberts.

The President—The next paper on the programme will be one by Prof. Anthony, of Cornell University, "On the Differing Temperature Co-efficients of the Different Coils of a Fine Rheostat." (For Prof. Anthony's paper see page 220.)

DISCUSSION.

Mr. Wallace—What is the size of the wire?

Prof. Anthony—We never have measured the wire; it is all covered with paraffine.

Mr. Frank L. Pope—I would like to ask if Prof. Anthony knows of any experiments of that kind that have ever been made with American made wire, and whether the same discrepancy is observable there.

Prof. Anthony—I don't know of any such experiments. It is our purpose to make an investigation of this sort; but this is all I have to report in regard to the matter at present.

The Secretary—I think Mr. Prescott is here. We should be glad to hear from him.

Mr. Geo. B. Prescott, Jr.—Prof. Anthony states that the wire in this rheostat was of different sizes. Now, if the current passing through the rheostat was of the same strength in all the different coils, the tendency would be to heat the thin coils more than the thick coils, and I suppose that would need to be eliminated.

Prof. Anthony—In regard to that the current was not sufficient to heat the coils anyway, I suppose the current would not have heated the coils 1-100 of a degree.

Mr. Wheeler—The kind of current that can be used with a deflecting galvanometer is about 1,000 times removed from the current that would heat the wire.

The President—It struck me that Mr. Prescott asked a very pertinent question. Could Mr. Prescott give us any definite, positive information from his own work?

Mr. Prescott—Some two or three years ago Mr. Weston, with whom I am engaged, was making some fine measuring apparatus and he found very great difficulty in getting german-silver wire at different times that was of a uniform quality. For that purpose he made some experiments on his own account to determine just the nature of this variation and what caused it. What led to his immediately taking up the subject was a paper published a short time previously in England by Prof. Bottomley, who reported the discovery by some Cheshire man, of a new alloy which he called platinoid. He said this alloy was ordinary german silver with one or two per cent. of tungsten added. He showed by some tests that its specific resistance was very much higher and its temperature co-efficient very much smaller than german silver. I looked at his original paper and I could not find what the proportions of the german-silver alloy were. I had previously searched through all the works on the subject that I could find, and not one of them gave the proportions of this german-silver alloy that they used—not even Matthiesen. For instance, you will find in the ordinary tables in the text books, a statement of all the different alloys in which the proportions of each one are given, until you come to german silver, and there they say german silver, plain and simple. In this country I went to several of the makers of wire and asked for their proportions, and they seemed to use almost everything. After Mr. Weston had heard of this alloy of tungsten he thought he would investigate it. He made up some ordinary german silver and put some tungsten into it and kept on adding it until he got 10 per cent. and he found that it did not make any difference. But we found by varying the proportion of the nickel the resistance could be made almost anything, so that the resistance of the german silver is almost directly proportional to the amount of nickel. The effect of zinc was only that of a dilution; it had a mechanical advantage in making the alloy ductile, so that it could be easily handled. We also found that the temperature co-efficient varied inversely; so that the greater the amount of nickel you had the smaller would be the temperature co-efficient. We got results very much higher than had been obtained in England with this alloy called platinoid, which was undoubtedly a german-silver alloy with a high percentage of nickel. The temperature co-efficient we endeavored to determine, but we met with a difficulty, which was this: We had a bridge—the largest pattern made by Elliott, of very large wire and very few contacts. There is only one contact for a series of coils. It is called the dial pattern. We tried to get the temperature of the room very even and we got some very curious results. We found that the temperature co-efficient was in the reverse direction. It decreased apparently after a certain point. But as we never could be certain of the temperature co-efficient of our bridge we were compelled to abandon determining what the exact co-efficient of the wire was; but that question of the proportion of nickel increasing the resistance and decreasing the temperature co-efficient we proved beyond doubt.

Mr. Mailloux—I think it would be of interest to have Mr. Prescott state what is the largest specific resistance he attained with various proportions of nickel.

Mr. Prescott—In the Western Union Telegraph Co. they have a peculiar way of giving specific resistances. They use a very large unit, and it is termed the mile-ohm. It is the weight of a wire a mile long which will give just one ohm resistance. The ordinary german silver on the market has a specific resistance of 12,000 pounds to the mile-ohm; that is to say a wire a mile long having one ohm resistance requires 12,000 pounds of metal. We found by using an alloy of something higher than 30 per cent. of nickel that we got a mile-ohm of 38,000 pounds, something more than three times the specific resistance of the ordinary german silver on the market. The temperature co-efficient, as I said before, was so small that we could not determine whether there was none at all, or whether it was in the reverse direction with the apparatus that we had.

The President—This is an important topic and it would hardly be fair to dismiss it without having the views and opinions of the members more fully brought out. We have with us one or two gentlemen who have some very valuable information to contribute. Mr. Wallace could give us some very interesting data on the subject of this wire. It is, as Mr. Pope has already pointed out, somewhat significant that we are discussing an English apparatus.

We have with us also Mr. Carl Hering who has done, I believe, some very interesting work in this direction.

Mr. Wallace—Speaking of german silver, there are all sorts of mixtures on the market, and it does not surprise me at all that you do not get two samples alike. You can take the same mixture and pour it at different heats and get different results from exactly the same mixture. Then you may roll it too much or you may draw it too much, and if you do not anneal it enough you can pull it apart, and you will get all sorts of resistances in that way. German silver is a very uncertain metal to handle. I have made a great many tons of it and it is very difficult to get two batches alike.

Mr. Hering—I am sorry I cannot contribute to the general information on this subject. I have very little experience with german-silver wire other than in measuring instruments.

Mr. J. A. Powers—I can speak very feelingly on the subject of the quality of german-silver wire in the construction of the McDonald cut-outs, if you will allow me to be somewhat personal. I find that it is almost impossible for us to get wire that will wind twice alike. We wind it up in bands and with a certain definite number of layers. You are obliged to adhere rigidly to a certain routine in order to produce certain results, and all coils are wound up and measured at the same time, and we find that do the best we can, we will have more or less variations of the wire. We have been to a good many parties for our wire and have been very careful about the gauge, and more careful about the temper, but it still bothers us all the time to get wire perfectly uniform.

Mr. Mailloux—I can add an item of my own experience on the subject. Very recently I had occasion to use some resistance coils made for an electrical railroad signal system, and the manufacturer showed me two bobbins that he had wound. It was intended to use a resistance of 20 ohms of No. 18 wire. He showed me a bobbin which was wound with that resistance and another one on which he said he had to take a No. 20 wire and then could not get the required resistance, although the bobbin was full.

It would be very desirable to have researches prosecuted on the subject so as to have some definite understanding arrived at which would guide manufacturers in the making of german silver of standard specific resistance. Will Mr. Prescott state for our information whether he advises the construction of rheostats, for measuring purposes, made of wire having such a high resistance, and also whether such wire can be had in the market?

Mr. Prescott—I would say the higher the specific resistance and the lower the temperature coefficient the better adapted the wire is for use in rheostats. The wire can be handled, as it is not too brittle. All the wire that I have has come from the Coe Brass Company, who made it according to specifications.

Capt. Michaelis—I cannot contribute anything to the knowledge on the subject in the way of any investigation in respect to

Digitized by Google

the special matter under discussion. But I would like to call the attention of the Institute to something that has struck me in this discussion, namely, the interdependence of investigations on different lines; and I want to call the attention of the Institute, for the purpose of getting some information, to something that may have a bearing on this matter. You know the question of winding guns has been a very important one in the last ten or fifteen years, and the subject of the winding tension of wire has a very important part to play in the amount of pressure brought to bear upon the core. Now it appears to me that in winding these coils that point should be taken into consideration, for no matter how small a winding tension you have, when you consider the very small cross-section that your wire has, even if you have but an ounce or a pound or whatever your winding tension is—when you increase that directly with the area of the cross-section of your wire, you will find, when you come to square inches that you have a most enormous winding tension to deal with. Now in a wire wound gun, which is after all nothing but a large bobbin, we have to take into consideration the resulting pressure due to successive layers. Of course we generally put a tube in the gun, and the initial pressure on that tube is calculated; but that pressure increases, of course, constantly with the number of windings on it. In this investigation of the amount of pressure, of course we use the ordinary formula in regard to a cylinder subjected to a uniform fluid pressure where the pressure produced at any point, if I recollect right, is equal to the thrust divided by the radius. Now say you have wound the coil to a certain radius, your successive wires that are brought around it will exert, entirely as a result of the winding tension, a definite amount of pressure on the layers that you have already there. In other words, suppose you have wound your bobbin one-half, you can consider that half wound bobbin as a new core, and it will be subjected to a very high pressure, merely as a result of the winding tension of the wire, and I would like to ask some of the learned gentlemen who have given this matter consideration whether the effect of that winding tension in producing pressure, and of course consequently changing the mechanical condition of the wire, has been considered in these investigations.

The President—Prof. Anthony might give us some information on this.

Prof. Anthony—There has been a good deal said in regard to the difference in different batches of german silver, and in regard to difference in temperature co-efficient. We know that the temperature co-efficient would vary considerably in different batches. If the wires I was describing were made from different batches of german silver I should expect the results to be as I found them, in fact very much more variant than I found them. But if reliable makers manufacture standard instruments, such as this is, from different batches of german silver, it is a very reprehensible practice. I supposed that care would be taken to select wires which had been drawn from the same batch of metal. I do not believe that with all the care taken in the mixing of german silver that you could get two batches that would give the same result for the temperature co-efficient, and for that reason I should suppose that in making such an instrument as this that it would be necessary to take the german silver from the same batch, and not from two batches supposed to be exactly alike. The point I wanted to make was that as coarse wires and fine wires drawn out of the same batch may not have the same temperature co-efficient because difference in annealing and tempering would make a difference in the temperature co-efficient, and that must be guarded against, as well as difference in composition due to accidental variations of the wire, and possibly also in the annealing process, since a fine wire would have to be annealed several times over, while a coarse wire would not have to be annealed at all. In the process of annealing change of position might occur from partial oxidation of one of the metals to a greater extent than the other. So my suggestion was that it would be important in making fine instruments of this sort, not only to use german silver from the same batch, but to take the wire all of the same lot, of the same size, that had been drawn at the same time, and subjected to the same pressure throughout from the time the metal was melted until it was finally wound up in wire and covered and wound up on the coil, and then to use several of those wires in multiple arc for the low resistances.

Mr. Mailloux—I would submit that in the winding of fine wires the tension is usually made as slight as is consistent with the proper guidance of the wire in winding. I do not think that the tension would figure in small coils, though I think it might have some influence in large wires.

Mr. Hamilton—I might say in respect to what Capt. Michaelis says, that a report was published in the *Philosophical Magazine* three or four years ago, where the writer had taken quite a number of different wires and taken his resistances both before and after they were wound, and the differences were quite considerable. I have recognized, though, for a long time, this point of temperature co-efficient for the wire, and a number of years ago, in ordering wires for coils, I specified that the wires should be of the same quality all the way through, so I should be sure of the temperature co-efficient. I also think that the suggestion of Prof. Anthony that the wires should be drawn of the same size is a very good one and winding wires that are liable to have heavy currents in multiple arc.

Prof. Thomson—It occurs to me that this point might be touched—whether in winding a large wire there is not more mechanical energy expended and a hardening or change of the molecules of the large wire, since it is wound on the same diameter as the smaller wire in making the coil. We will assume that we have a wire of a certain diameter, and compare it with a wire of much smaller diameter. Now in going around a certain arc the metal on the half of the wire towards the center will be compressed while that on the exterior will be expanded, and the amount of compression and expansion, with a certain radius of winding, will be of course much greater in a coarse coil than in a coil of fine wire. This may have some influence perhaps on the point under discussion.

Mr. Mailloux—With regard to the remarks made by Mr. Hamilton about the resistance of wire before winding and after winding, I think that it is due precisely to the point mentioned by Prof. Thomson. I have myself noticed (although I have not the resources of a physical laboratory at my command) that a wire that has been wound and unwound several times has a difference in resistance, especially if it is in large lengths, and I thought at first that I was mistaken; but with very careful measurement I found that there was a slight difference between the two and I cannot find it to be due to any other cause except some molecular disturbance in the wire.

Prof. Thomson—Take a metal band and bend it on the edge, and then bend it on the flat, and it seems to me by that means we would arrive at the fact or not of there being a change of resistance produced by bending flat wise and on edge.

The President—The next paper which we shall take up will be that by Mr. Dugald C. Jackson, of Cornell University, on The Relation Between the Cross-Section of the Iron in Armature and Field of the Gramme Dynamo.

Mr. Jackson then read his paper. (See page 221.)

DISCUSSION.

The President—The paper is now before you for discussion. It seems to me that Mr. Jackson has thrown down two or three gauntlets that some of you would be in a position to pick up. Mr. Wheeler has done some very important work in this direction.

Mr. Wheeler—All I can say in discussing the subject, is that the paper deserves the most unlimited praise. I will admit frankly that I did not expect it would, but having heard it I cannot say too much in favor of it. I think the paper is nearly perfection. I shall have to study over some of the points. I have arrived at some of the conclusions which are expressed on that sheet of paper (curves, see page 222), not exactly by different processes of reasoning, but by different tests; for instance, using a prony brake pulled up tight to the pulley, and a scale to show the pull. The pull or torque in the dynamo is the equivalent of the electromotive force; in fact, in the early stages of dynamo work, some gentlemen whom I know made their electromotive force calculations entirely by the pull.

That second curve on the sheet of paper is extremely interesting and extremely valuable. I understand, without having had enough time to digest thoroughly the important points stated, that that curve represents the effect of making changes in the cross-section of the armature; that is to say, as you go to the right hand in the curve the short perpendicular line represents increases in the section of the armature core, compared with the field, and the distance up and down represents (to speak very practically) the benefit derived. The result of the work of my friends and of myself has been that we have pitched our machine at exactly the point where the crease is in that paper. There is no line drawn there, but it is exactly at that point—just above that large letter B; and after carefully studying the subject, and weighing the considerations, the effect of increasing and decreasing that would—or, if we should get a little away from that, would not—be as good. The curves above these are very valuable, and I have listened to the whole paper with a great deal of interest.

Prof. Thomson—The subject of dynamo designing is undoubtedly one of very great importance, and I have some few remarks to offer thereon, as I have designed a large number of dynamos of various types, and experimented with a considerably greater number.

I think that the first thing we should settle, in dealing with this subject, is the type—what is the machine to do. If you are to run arc lights your design must be entirely distinct and different from that which you use in running incandescent lights. The reason of that may not, at first, be so obvious; but if we consider the nature of an arc light we will see it. An electric arc may be running so steadily—I speak now, of course, of the long, quiet arc; what may be called the perfectly developed arc, not a hissing arc—(that is, a semi-incandescent light, and partakes somewhat of the nature of an incandescent load for the machine)—but a long, well-developed arc, with the crater fully exposed, burning quietly, possesses peculiar properties. If it is at a certain condition—10 amperes and 45 volts—and you

Digitized by Google

increase the current a little, you may convert that arc into a hissing arc abruptly, with a great fall in its resistance. Now what will be the effect, if you have a machine that is worked at its normal current, on the curve of that machine? You will find that the machine is not stable. The current will not stop at 10 amperes, if at this point the current of the field magnets is represented at 10 amperes in a series dynamo—the current will continue rising until a point is reached on the curve where the electromotive force of the machine either drops or does not increase by the addition of current in its field magnet, or exciting circuit. The consequence is that the successful arc lighting machines depart entirely from such terms as you find here. They go up to a certain point when the normal current is reached. There on the bend, and a little beyond it, the line dips, showing that an increased current drops the electromotive force, and that is the condition of stability in running arc lights. The arc may be burning quietly. That will represent the wide open arc. And this set of actions begins. You design your machine, we will say, with a large amount of iron in your armature and a large amount in your field; you save all the power you can; you make what may be called a very excellent type of an efficient machine, and then you put on a circuit of arc lamps. You have calculated the excitation, &c. You expect to work the arc lights steadily. You find, on closing the circuit, that the carbons go apart; a tremendous roar of current comes through, the arcs draw wide open, suddenly the machine ceases to develop current—down they come, and the same operation is repeated continuously. The reason of that is, that you have adjusted your arc lamps to run on 10 amperes, while your machine is not adjusted to furnish 10 amperes and be stable under those conditions. The current is not stable until the field magnets have reached a certain degree of saturation—unless your arc lamp mechanism is extremely sensitive. Even in those conditions—I speak, of course, of the series machines—while the current in the field continues to increase it causes a fall of resistance in the arc, a further increase of current, accompanied by a further increase of electromotive force of these currents and to such an extent, that quickly as the arc lamp mechanism can act it cannot get ahead of the increase of current. It is always behind time in drawing the arcs apart. It does not act instantaneously, while its effects on the current are always headed off. Finally there is a rupture of the whole circuit, down comes the carbon, and we start again. That is a phenomenon we have met with frequently, and it comes always with an increased amount of iron beyond a certain proportion in the machine. We call it oscillating, surging, or boiling up and dropping down—rough terms that we have used for the purpose of indicating the condition. It may be interesting to remark, in this connection, that we tried at one time compounding the machine and endeavoring to work it with a large amount of iron away below saturation, using a derived circuit winding to drop the curve at the proper point. Even in that case there was the same difficulty of surging or oscillation. Now when we come to the design and construction of dynamos for incandescent lighting, or for motive power purposes, or for the electric motor, then we have, of course, an entirely different state of conditions. Our resistance on the external circuit is not subject to this sudden drop of resistance, but it demands more and more electromotive force to increase the current through, and we have a dead resistance somewhat similar to this in use on a wire resistance. In that case you can work anywhere you please. On this line (indicating) you can work at about this point; and it may be that an explanation of some of the results Mr. Jackson has pointed out would be found in the fact that most dynamo builders prefer to work pretty low down on the curve. They do not like to buy their magnetism dearly. They would rather put in quantities of iron and diminish the copper in the field magnets, and get their magnetism at a rather low degree of saturation, and you will notice at this point that there is not a very great difference. Your differences begin to accumulate as you get up on the curve. But in motor work, we find by actual work that we get very good results in constructing motors by putting in a rather larger amount of iron than has been customary in the armature. We have made the permeability of the armature very much lower than the ordinary practice of dynamo design has called for, and it is a question whether the movement in the direction of increasing the mechanical conductivity of the armature iron is not even with dynamos a proper move. The limitation of increasing the iron sections will be found in that plan between two conditions working against us, and the condition of increased output as shown by these curves working for us; that is, if we use the armature iron in larger sections we may make it so that the changes of current increase the heat; that is, the Foucault currents may trouble us; and if we make it of larger section, also, we increase the length of wire which is to go around it—one turn of wire required to cover the increased section—and those influences may be said to be working against us; so that there will be a point somewhere on this curve at which we will find the maximum conditions. In motor work our design, of course, is to pass as much as possible of the magnetism we develop through the armature, and the armature itself assists us in doing that. There seems to be no reason why we should not use a comparatively large section of armature iron in a motor. We develop a field magnetism which we do not wish to have conducted out into the air, and therefore we give it the best path possible through the armature. The motor would seem to be made of the best design when we have given a very ample section in the armature for the passage of the lines of force.

Mr. Mailloux—I would like to ask Mr. Jackson whether his statement is that 75 per cent. sectional area is what he considers the best proportion. In my practice whenever I have used the Gramme ring, I have always used a sectional area at least equal to the sectional area of the limb. I did that, not because I apprehended that I needed such a large amount, but because I realized that only a portion of that sectional area can be utilized—employed usefully in conveying lines of force. Some years ago, I discussed that question through the press and called attention to what struck me then as a new way of looking at the subject, and it is this—that as the lines of force make the ring their path in passing from one pole to another, it is quite evident that the tendency of lines of force like other things in nature, is to take the path of least resistance, the shortest path, and consequently to crowd each other. Now, it is quite plain to my mind that there must be a condition of lines of force on the periphery of the ring on the outer surface different from what there is inside, and consequently this must mean an increased resistance of penetration. In other words, the co-efficient of permeability must become lower, no matter what the resistance of the iron is, at the point where the lines of force enter into the core, as well as where they emerge from it, so that we might have a core of very great section, and if the magnetic density, so to speak, is very great on the outer surface, then the resistance to further penetration will be so far reduced that only a portion of the sectional area will be useful in conveying lines of force. I was led to look at this from the fact that a great many builders of Gramme rings have departed from the old method of constructing the core by fine wire wound into a solid annulus, and instead have used laminated rings of more or less thickness and separated from each other at a certain distance. Now I have noticed that although they get much less weight of metal in a given area of section in an armature than would be the case if they used fine wire yet they seem to obtain very nearly as good results. And it has always been a question in my mind whether the use of laminated rings, leaving a space between, did not afford better opportunities for the lines of force to seek new paths—to enter by the side of each lamina—instead of being forced to enter at the periphery. I know that there is a great deal of diversity of opinion among physicists as to the possibility of a piece of iron being saturated at one part and not magnetized at another part. I remember at the electric conference the statement made by Prof. Silvanus Thompson was harshly criticised when he said the central part of a core might not be magnetized though the outside might be saturated. I do not know on which side of the fence to stand, but I am willing to be educated on that subject. I have been told by a maker of dynamos that taking cores of very large sectional area he could take out the central part of them without interfering at all with the nature of his characteristic curves. Those are significant points, and some information on them would be very acceptable.

The President—We have two minutes to the lunch hour. If that time is not to be occupied by discussion we will adjourn immediately, and I think as we have so much business before us it would be well to take but an hour. Adjournment till 2 o'clock

AFTERNOON SESSION.

The meeting was called to order at 2 P. M. by President Martin.

The secretary read the list of officers elected at the annual meeting.

The President—The first matter on the regular order of business is the paper that will be contributed by Prof. Elihu Thomson; but before we reach that, I understand that a very important report will be presented, and we will take that up first. Mr. Phelps, as chairman of the committee appointed last night to report at this meeting, will now present his report from the committee on permanent quarters.

Mr. G. M. Phelps, Jr., read the following report:—

REPORT OF THE COMMITTEE ON PERMANENT QUARTERS.

To the American Institute of Electrical Engineers.

GENTLEMEN:

Your committee appointed to consider and report upon a plan for securing permanent quarters and to estimate the cost of same, offer the following report:

It should be stated first that the subject before the committee has been discussed at considerable length during the past week by several officers and members of the Institute active in its work; and that the committee avail themselves of much of the suggestion thus brought out, as well as of information elicited by preliminary enquiries on the part of several members as to cost, ways and means.

As a result of enquiry, and consideration of the needs and

Digitized by Google

possible resources of the Institute, your committee recommend that immediate steps be taken towards securing permanent quarters; and it is their judgment that, in view of considerations presented below, the Institute will be justified in moving to purchase a house in this city, in an eligible location, and of sufficient capacity to provide all accommodations that will be required for many years. A dwelling house, in a respectable neighborhood, not remote from Union or Madison square, somewhat similar to that in which we now assemble, through the kind courtesy of the Society of Civil Engineers, could be easily adapted to our purposes.

The committee have made enquiries as to the cost of such a house, and have been assured that a dwelling house, 24 or 25 feet wide, and of three or four stories, can be purchased for $30,000 or less. Three such houses were found upon the list of a single prominent real estate firm.

How shall sufficient money be raised to purchase and maintain such a house?

The committee recommend that a fund of not less than $10,000, be raised by subscription. They have reason to believe that from $3,000 to $5,000 can be obtained from subscriptions of members of the Institute, and that the balance of the $10,000 proposed can, by proper effort, be secured by subscriptions on the part of gentlemen whose fortunes and business have been connected with the development of electric arts.

It is recommended that all subscriptions be made contingent upon the raising of the sum named, viz., $10,000.

With such a sum in hand, it is the opinion of the committee, that at the Institute would be justified in selecting and purchasing a house. The remainder of the purchase money could be raised on bond or bonds and mortgage, at a low rate of interest, probably not greater than four per cent.

In respect to the maintenance of a house, it is quite obvious that a large increase will be required in the present revenue of the Institute. This would, in the opinion of the committee, be partly supplied by the increase of membership that would follow the provision of permanent quarters, with increased facilities and privileges. A still larger increase could be provided by increasing the rate of annual dues for resident members, in return for which they would have privileges similar to those of a club.

The fixed charges may be approximately and safely estimated (excluding personal services, custodian, etc.):

Interest four per cent. on $20,000	$ 800
Taxes, insurance and repairs	1,200
	$2,000

Further charges would depend upon the nature of the accommodation and facilities provided. It seems safe to say that $1,000 could be made to cover such house expenses as would be required for the first year.

The committee by no means recommend limiting the amount proposed to be raised by subscription to $10,000, but consider that it will be within the bounds of prudence to purchase a house when that shall have been reached. They recommend that efforts to secure subscriptions be pressed diligently, and confidently believe that a very large portion, if not the whole, of the sum named ($30,000) can be obtained.

The committee deem the advantages of having permanent quarters of our own, so obvious as to require no enumeration on their part, and believe that a concerted effort on the part of the members of the Institute will surely lead to success.

They trust that such action will be initiated at this meeting as will result in the provision of a suitable house, properly fitted for the occupancy of the Institute, at the resumption of its monthly meetings next November.

To that end they advise the passage of a resolution authorizing and directing the council to proceed to obtain subscriptions, perfect plans, and report at a special meeting of the Institute, to be called not later than July 1st, next.

Signed,

GEORGE M. PHELPS, JR., *Chairman*,
T. COMMERFORD MARTIN,
GEORGE A. HAMILTON.

NEW YORK, May 18th, 1887.

Mr. Phelps—The thousand dollars mentioned in the report as probable cost of care of house, with the two thousand dollars fixed charges, represent an expenditure of three thousand dollars a year, and it is thought that as we shall begin modestly we may find it desirable, and it would probably be feasible, to derive some revenue from the house. For example, the basement story might be rented for some business purpose that would not be disagreeable in its nature—possibly for a restaurant of a good class, which would be rather an advantage; and it has also been suggested that the third story of such a building could be fitted up for dormitories, neatly and comfortably furnished, and that it would be used largely by out of town members and their friends at a reasonable charge. It is proper to say, further, that a considerable number of members have signified their willingness to subscribe within their ability, towards raising the proposed fund. In view of the interest that has been expressed at various times within the last three years since the formation of this Institute, and the very manifest advantages of having a place of our own where we can be independent and where we can have abundant accommodations, where we will have room for the starting of a laboratory and for a historical collection, and other similar purposes, and the additional standing and prestige that the society will have as soon as it has a habitation of its own, the committee very earnestly recommend the prompt and cordial support of the Institute, in making an earnest effort to carry the movement through.

Mr. Shelbourne—I move that the report be accepted.

The motion was seconded by Mr. Wheeler, and carried.

The President—Having adopted that report, gentlemen, the next thing in order is to have a resolution presented in the shape suggested by the report. I should be very glad to have that resolution put in formal shape immediately.

I understand the report to suggest that the work be entrusted to the council, and that the council summon to its aid all the mind, enthusiasm and weight in the profession to put this undertaking through.

Mr. Fowler—I would like to say that at a recent meeting of the Electric Club this same idea was broached of securing quarters, and I think it would be a good idea for our committee to confer with the members of the Electric Club and see if we could amalgamate in some way, so that instead of running two small sized establishments we could get together and make one large one. We have a good many members in common.

The President—I think that Mr. Fowler's remarks have our hearty sympathy. We move as a national body. This morning the matter was brought up of amalgamation with the New York Electrical Society, which has an electrical record and which desires, in some way, to affiliate with us. I think if we put ourselves on record to-day as willing to undertake this work we shall receive the immediate assistance of both bodies, and we shall have a home in New York of which all three bodies may be proud. The time has now arrived for us to bring the subject to action. I do not think that we can do better than to accept a resolution which I believe Mr. Phelps is now about to offer.

Mr. Wheeler—I think it would be well to get our house movement well under way before considering projects of associating other societies with us.

Mr. Phelps offered the following resolution:

Resolved: That in view of the report of the committee on permanent quarters, the council be directed to take up the subject and to proceed at once to solicit subscriptions, perfect plans, and to report at a special meeting of the Institute to be called not later than July 1st. He said:

The matter is presented in this form so that during the next six weeks, or thereabouts, the subject may be fully considered by the council; it can use its own methods and appoint a committee or otherwise. Final action ought very properly to be taken by the Institute as a body, and at any time not later than July 1st, we can no doubt secure sufficient attendance to take proper action.

Capt. Michaelis—In rising to second the motion, I would simply like to say that aside from the strong grounds already presented in favor of this project, it may be considered in another light, and that is from an ethnological standpoint. Man is a gregarious animal; there is no question about that, and I think that the further we advance in civilization and the older we get, we find there is a tendency to come together; in other words we are clubbable. In all the older countries you find that every man, whatever may be his profession or standing, belongs to some club. That is notably the case in England, and it has got to be so in our country. I am told that here in New York there is not a club in the city whose membership is not full to its constitutional limit, and in some cases hundreds of men are waiting for admission. That principle applies to us. We have got here something that induces us to seek companionship and to come together, and having a house of our own in a measure fulfils that innate desire that we have to become club men and meet. Professional men, and men who are not professional have their Saturday evenings and Wednesday nights to meet here and meet there. There is always this tendency to come together and chat and read papers and do some other things that are not at all disagreeable, and I think that we would find a ready response to anything of the kind, provided that the financial part can be arranged. I do not think that at this early stage of the movement, consolidation with any other body need enter the matter at all. I think Mr. Phelps's resolution meets the point. As I understand it, the idea is to give the council the authority of the Institute, to act in its name, and do what it may deem best to further the object before us. The effect of this resolution will be that the Institute as a body commits itself to the idea that there shall be permanent quarters acquired in whatever way may be deemed best, and I cordially second the resolution.

Mr. Mailloux commended the purpose of the resolution, and trusted its execution would foster and further develop the work of the Institute in its true line, the encouragement of scientific research and study in relation to practical electrical work.

While appreciating very much the social element, he would

Digitized by Google

dislike very much to see the scientific feature of the Institute, which is its foundation, suffer from the introduction of too great a dilution on the social side of it.

Mr. R. W. Pope—If we want a house I feel we can have it, and I think that before this meeting is over we will be sure of starting to get it, and if we make the same progress in three months that we have made in three days, we will have a house to move into next fall.

The President—The question has been called for; I think it is time now to present it. (The president read Mr. Phelps's resolution.)

Mr. R. W. Pope—I have one word to say, and that is, that the committee should go right ahead without waiting for the council.

The President—I shall immediately invite the co-operation of the members in the work.

Mr. Phelps—I was about to say, Mr. Chairman, that everybody concerned will immediately proceed with this work, and the council may come together whenever it chooses, to take any action that may be deemed necessary at any time. I do not think that the fact that the council does not meet regularly until a month from now need cause any delay.

The President—Those in favor of the resolution now before the meeting, will express their sentiments by saying aye.

The resolution was carried unanimously.

The President—That resolution is before you and I presume it means something. I have been surprised myself to find the unanimity and enthusiasm of the members on the subject. They all seem determined, every one to whom I have spoken and every one to whom the members of the council have spoken, to secure permanent quarters, and that being the case there would seem to be no reason for delaying to take energetic steps in that direction. We have the support of leading members of other societies of whose presence we are proud. We have here Mr. Pendleton of the New York Society. Shall this resolution fall to the ground to-day, or shall its purpose be carried out?

Mr. W. J. Johnston—Mr. President and Gentlemen: I think that we should go right on with that resolution now. We are all working together for the same object; we do it perhaps in different ways; one invents and another introduces apparatus, and another chronicles what they are doing. There is no question I think in the mind of anybody who understands the subject, that this Institute ought to have permanent quarters. It seems to me as if it would give it a standing that it has not now either in its own country or abroad. I think that it ought to mean something if you put the fact of your being a member of this institution to your name. I am very much pleased with these quarters of the civil engineers, I do not see why we should not have just as good. There is nothing that would give me more pleasure than to help along a thing of this kind, and I take great pleasure in heading the list with $500.

Mr. Frank L. Pope—Mr. Johnston talks business. I take great pleasure in adding to that, on behalf of the firm that I represent, the sum of $250 to start with.

Mr. Phelps—I took the liberty two days ago when several gentlemen were talking this matter over, and trying to be prepared to do something substantial to-day, of communicating with our very good friend and associate, Mr. J. Frank Morrison, of Baltimore, addressing him a letter stating that we were thinking of doing something of this kind, and that we would be glad to receive a telegram from him the following day, to let us know what we might put him down for. His telegram in reply reads "$200 to start with."

Mr. Wheeler—I have had but since 10 o'clock last night to see what I could do, but I will contribute $100 from our company. We will give more, but I have not had time to talk it over with my associates. I will give that amount, however, on my own responsibility.

Mr. Phelps—I can tender on the part of my father, $100, and on my own part $100.

The President—The president is not a moneyed man, but he has the interest of the Institute of Electrical Engineers at heart, and wishes to put his name down for $100, with liberty to increase

Mr. R. W. Pope, Secretary—The treasurer has been heard from. I intended to speak with the gentleman with whom I am associated, Mr. Hotchkiss, representing A. G. Day, who, as you all know, has been making insulated wire for twenty-five years, and I presume when the proper time comes he will do at least what I do, and I feel an intense interest in this as a kind of stimulus to the work of the secretary. The secretary has to do a good deal of work, and it is rather hard sledding when he is not supported, and in order to help the thing along I want to put myself abreast of the president and treasurer, at least, and you can put me down for $100.

Mr. Wetzler—Mr. President, I would like to contribute my mite of $100.

The President—It seems to me, gentlemen, that we are getting a pretty good expression of feeling on this subject. We evidently mean business. I might say that I have information from my good friend, Mr. Clarence Stump, that he wishes to be counted in to the extent of $100.

Mr. Phelps—That seems to make about $1,650 so far.

The President—In ten minutes.

Mr. Phelps—We said, I think, in our report, that we thought the association itself would raise somewhere from three to five thousand dollars, so we seem to have got half way to the minimum now.

The President—There are some members, perhaps, who may not feel at present that they can contribute to such an extent. It seems to me that we shall easily reach the limit that Mr. Phelps appears to have fixed.

Mr. Frank L. Pope—I think, Mr. President, that we may feel that the more money we raise in the society the greater amount we can get outside. People always are more willing to help those who show a disposition to help themselves. I think we shall have very little trouble in raising the rest of it.

Prof. Anthony—I have been waiting for the hundred dollar men to get through. College professors, perhaps, cannot be expected to go so far as men who are working commercially, but I will be glad to put in $50.

The President—I think that college professors are the poorest paid class of men in this country, considering what they do to promote our best interests, and I regard that as a noble contribution, and one which will be appreciated by the Institute to the full.

Capt Michaelis—I am an army officer, and cannot do quite as well as a college professor, but I received a note from eight little Michaelises and they each said they would give two dollars and a half towards this movement.

The President—The business of the afternoon is to take up first some very interesting phenomena, which will be brought to our notice by Prof. Elihu Thomson, on alternating currents. We all listen to the professor with the utmost interest and pleasure whenever he has an opportunity to address us.

Prof. Thomson then read a paper on "Novel Phenomena of Alternating Currents." (See page 211.)

DISCUSSION.

The President—I think we have reason to be proud of our distinguished member, and of the interest he takes in us when he presents so valuable a paper at our meeting. It is now open for discussion.

Mr. Mailloux—There is one very interesting feature brought out by Prof. Thomson. I think it is the phenomenon which he illustrated by means of his first figure, noting the repulsion and the attraction that takes place when the current is reversed in an ordinary electro-magnet. I could not help thinking, at the time, of some experiments made some years ago by Professors Elphinstone and Vincent, and about which I once took it into my head to write something. The effect was brought out by Messrs. Elphinstone and Vincent of the magnetic circuit that we now so well know and use in dynamo-electric machines. I was very much struck by the statement of Faraday in his experimental researches, where he speaks of lines of force expanding during the action of the beginning of the passage of current through a circuit, and of their collapse when the current is discontinued or decreased, and I remember making a note in this article (which you will find somewhere in the London *Electrician*, several years back) of experiments or observations made by me to show that that phenomenon was observable in an ordinary electro-magnet. I have been able, by means of a delicately suspended needle, or by a very thin piece of iron wire near to the pole, so that it might place itself in the lines of force and follow the oscillations of the lines of force, to trace a positive motion in the lines of force which would be exactly correspondent to that just referred to by Prof. Thomson; in a word, when the electro-magnet is in the process of magnetization, when the current is passing through it, there is an expansion of the lines of force starting apparently from the yoke, and the effect of the motion of these lines of force re-acting on the disc would be such exactly as would produce repulsion in accordance with Lenz's law. On the contrary, there is a collapsing process of the lines of force in the process of demagnetization, and the action would be again such as to produce attraction or the dragging of the disc with it. Now, with regard to the difference of repulsive and attractive effect, there is another fact which I think Prof. Thomson has not taken into consideration, and which, to some extent, increases the difference of repulsive effect. If we assume for a moment that the process of expansion and collapse of lines of force is true, and I have no reason to doubt that it is, then we will readily see that as our current is put on we are dealing with quantities—first, the resistance of the medium to the stress that is produced by the current; and second, the amount of energy, or the rate at which we supply energy, to overcome that elasticity. I might also add, of course, a third quantity, which is reaction, produced by self-induction of surrounding metal; but when the collapse takes place we have the pent up energy that has been stored by the process of contraction. I might explain this by taking a piece of rubber and stretching it. The rapidity with which it is stretched depends upon the rate at which energy is applied to it, and on the elasticity; but when I let go it falls back by virtue of its own

Digitized by Google

elasticity, and nothing else. In the case of the secondary coil, we can deal with this self-induction, but there are experiments which have been made, I think, by Prof. Von Beets, which show very clearly that the impulse of collapse is much more rapid than the impulse of rise. Consequently, there would be a difference of current in the inductive circuits, which would tend, if we follow them carefully by means of the curves produced by Prof. Thomson, to emphasize that difference of action in favor of the repulsive process.

I would like to hear the views of other gentlemen who are well informed on these subjects.

Mr. Prescott—Prof. Thomson has so clearly and beautifully described the experiments he has made that he has left hardly anything to be asked. I would say that I am particularly interested in the application to measuring instruments, and I would like to know whether in the application he has discovered, the repulsion is inversely proportional to the square of the distance of the plates, and if so whether he has preferred to make his instruments to measure that distance directly, or based on the distance directly, or whether he has preferred to counterweight or in some way counteract the movement so as to keep it always constant.

He has paid so much attention to this question of alternating currents that I should like to ask him also whether he has ever made any experiments to determine, for instance, whether a secondary battery in the circuit of an alternating current machine would cut off a portion of the electromotive-force in one direction which was counter and equal to that of the battery itself, in which case an ordinary current instrument would measure the current if connected around the poles of the battery.

Prof. Thomson—In regard to the measuring instruments, I have used the principle in several ways. The matter has not been carried sufficiently far as yet to determine all the points on the subject, but I have used gravity and a spring in both cases. However, I find there does not seem to be any regular law, perhaps any more than there is with an electro-magnet, for the decrease of the effect by distance, except when the distances become very large. The very fact of a change of position changes the relations of the currents themselves—the relations between the two currents,—so that we can hardly regard the problem as any different from the problem of an electro-magnet attracting its armature. When the armature is placed at a certain distance there is a certain distribution of magnetism; when it is taken to another distance the distribution is so changed that we could not consider that the centre of gravity, so to speak, of the magnetism is the same in the two cases, and the re-distribution will depend on the length, the diameter of the core and the size of the armature, so that the problem becomes a very complex one. But I have made a very curious application of the principle in this way: I have taken an ordinary fruit jar and put in it a disc of a certain thickness and attached to it a bulb of glass, and floated it in alcohol or water until the gravitational effect was so overcome by the flotation that it was almost indifferent, but it would just settle down to the bottom of the jar. I then put an alternating current coil below it and passed a current of gradually increasing amount. Gradually the disc would begin to lift itself and at a certain current would float to a certain height, standing in the liquid supported by the repulsion. There we have a very excellent illustration and a means probably of getting at the relative effects of repulsive effort under different conditions.

In regard to the point brought up by Mr. Mailloux concerning the more rapid drop in the current at the end of a wave, I think that he must have been considering the effect of interrupted currents only in that case—the ordinary induction coil—that is, you put a primary current on a primary coil, put on a battery current, and the counter electromotive-force keeps it down and it slightly rises to the current which it would have with the electromotive-force present acting through the resistance only of the primary wire. But when you cut off the current, the secondary current is much more vigorous in electromotive-force but does not last as long. In the primary coil, surrounded by its secondary, when we put on the current or close the circuit, there is an opposing electromotive-force; the battery does not get in its full current for some time and during that time the secondary currents will seek to evolve their energy; that is, they have duration without great force. But when we cut the battery current off and do it with a condenser, which enables us to remove the contact without sparking, or in other words, cheat the current a little and give it another passage for the time being, the secondary then gives out considerable energy.

I may mention an interesting experiment in this connection showing the effects of self-induction on magnets—a very curious experiment tried with a large magnet. It has nothing to do with the repulsive effect; it has to do with self-induction; and the curious effects produced by it in lagging or stopping waves and preventing waves from having their full value. We put a magnet into circuit with the dynamo, and we take a shunt of carbons points—a shunting switch made with carbons as they might be in an arc light. The current comes through this way (illustrating on the blackboard), when the shunting switch is open and goes out. We close the switch, and of course the current gradually leaves the magnet and gradually it flows in nearly full volume over the carbon points in accordance with their resistance. If their resistance is much less than the magnet all the current will flow over the carbon points. Now, the arc formed here instead of being a good, strong full arc, will simply be the tops of the waves of the current, while the steady current will flow through the magnet. That is, you will have a steady current in the magnet and the tops of the waves will be chopped off and sent through the carbon. There is no self-induction in this branch and the current there is steady. In fact the spark you get here and the arc you get here will very closely resemble the spark obtained from the Rhumkorff coil—a thin spark with a considerable aureola and not very hot. I have drawn them three-quarters of an inch long, playing and sputtering, showing that their waves are having their true value, whereas an ammeter put in shows a current pretty nearly the line current.

There was one other point on which information was asked for. It has slipped my mind.

Mr. Prescott—In regard to the secondary battery and the alternating current circuit?

Prof. Thomson—That is a question that I have not investigated at all, but there would be a current of double volume in one direction and a stoppage in the other direction, provided the volts of counter electromotive-force were right. There is a possibility of producing a current of this character by combination of an alternating current machine and a continuous current machine. We may have a current like that (illustrating) produced which would be somewhat the current that you were asking about. Whether applications of such currents will ever be made or not I do not know.

The President—We have with us Mr. Pendleton, President of the New York Electrical Society, who is very much interested in this subject, and we should be most happy to hear from him anything he may wish to say.

Mr. Pendleton—I came here this afternoon more particularly to take a back seat and listen; I am grateful for the hospitality with which you have received me and thank you for the invitation to speak on this subject. The subject under discussion, however, is not one to which I have given much thought, and it has been so thoroughly demonstrated that I feel that there is but little for me to say. In regard to the secondary battery application that Mr. Prescott just suggested, I should fancy the result would be the steady discharge by the battery of whatever charge it might have; but I should think it would be impossible to aggregate chemical energy in the battery under the circumstances. While I was listening to Prof. Thomson's interesting account of his experiments, it occurred to me that—if the actions are sufficiently delicate—it would be possible, in connection with the telephone, to make a recording instrument which might at any rate equal the success of the Edison phonograph. In this case it would be a reproduction of the waves of sound in the same manner.

Mr. Hering—I would like to ask Prof. Thomson how the magnetic attraction compares with the induction. If the closed copper disc were to be made of iron, there would be attraction; now, how does that attraction compare with the repulsion in case the disc is not magnetic. I ask that in order that we may get some idea of the strength of this repelling force.

Prof. Thomson—I have not made any determinations with that object in view, that is, to determine the relation between the two forces mentioned by Mr. Hering. The copper band, of course, uses energy of current flowing in it. If we have a current flowing in a coil attracting an iron core and the iron core is thoroughly divided so as to avoid currents in the iron itself, we would get electro-magnetic attraction pure and simple without necessary loss of energy; but in the case of the copper band there is undoubtedly, where large work is being done, a loss of energy due to the flow of heavy currents in the conductor; but in the case of a disc which is deflected, the disc saves itself that loss by throwing itself more or less at right angles. It is only when you are resisting the motion by a counter weight that the loss amounts to a great deal. Allow the thing to move and it relieves itself of the stress by leaving the point of greatest stress.

Mr. Powers—I had a very interesting experience in the line of Prof. Thomson's address, in respect to the lag of heavy currents, which I wish to bring to your notice, and to be somewhat

Digitized by Google

personal about the matter again. At Troy we are making an alternating current dynamo, producing direct currents from it; in other words, a simple multipolar dynamo, with this exception that the armature is in two layers, the neutral point on one armature corresponding with the maximum point on the other. Those two armatures are connected to a single commutator, there being two bars connected with one armature and the next two bars with the other; the positive of one and the positive of the other, the negative of one and the negative of the other; in that relation, a brush being put on of a certain width, we found some curious results. With plating machines of low tension we found we could increase the width of contact to such an extent that we seemed to collect the entire current from both sides of the armature; the current seemed to be prolonged from each side of the armature, so that we were practically collecting the current from both sides. The moment we used high tension currents we failed. Without apparent lag of the current, whatever that was, the minute we increased the tension of currents up to 300 or 400 volts, we failed entirely. But the point that I wished to bring to your attention was, that we could make that contact of considerable width, and apparently get a larger power from the same amount of material in the machine in low tension work, than we could when we got too high tension, and apparently there existed there this feature of lag of heavy currents which Prof. Thomson first brought up.

Prof. Thomson—I do not think you can say that heavy currents lag any more than light currents. A heavy current is nothing more or less than the flowing around of so many light currents. In the closed circuit of a coil it is the same current going round many times, as compared, you may say, with parallel currents, which represent the current that goes in the fine coil repeated side by side so many times, and the lag ought to be the same in both cases. I find, for example, that it does not matter in these experiments whether I use a copper ring or a closed coil of fine wire; I might use 36 wire provided I could get as much copper into the same space with 36 wire as I could get with a heavy mass of copper. That, of course, I cannot do; but if I could, I haven't the slightest doubt that the high electromotive force closed on this would have the same lag as heavy currents closed on a ring. In one case it has greater length; in the other it has greater volume which lags the current.

Mr. Powers is probably working with high potentials in one case and quite low potentials in the other. Now a high potential machine is a ticklish thing to handle anyhow. You must put your brushes on and carry the coil away not a moment too late or you will have a flash and short circuit of the commutator from one point to the other. I am speaking of the type of machine you refer to. The low potential current, however, permits you to have a considerable variation in the point of connection without provoking bad sparking and flashing; you no doubt need to put the extra over-lap of brushes on coils brought into action at the moment they are developing very low electromotive-force, and taking them out when they are developing nearly no electromotive-force. That you could not do in a machine of that type with high potentials, because if you keep the coils in beyond their time of possessing electromotive-force which could just sustain the circuit, you would have a flash; there would be an alternation at the slot in the commutator which would cause a reverse current.

Mr. Powers—The action I was speaking of was not flashing at the commutator, but the curious growling of the machine against itself; for instance, the relation between 10 volts and 100 volts on the same machine, if you choose to couple them up directly: and the same brushes would give you that slowing down and growling effect, while in the other case the brushes worked smoothly and gave good results.

Prof. Thomson—I misunderstood the point in question.

Mr. Pendleton—The subject has brought up a matter which was of considerable interest to me some time ago in the different action had upon the magnetization of a differential magnet in a lamp that I had invented some three or four years ago, and it may be somewhat analogous to the action mentioned by Mr. Powers. It was an unexplained action so far as I could get at it, but some one may be able to give the reason for it. An ordinary differential lamp, extended poles acting upon an armature which governed the carbon rod, I ran for several weeks upon the circuit of the United States Electric Light Co. to good advantage. The lamp worked well, and the feeding point and polarization of the cores was correct and it worked very satisfactorily. I had occasion afterwards to put the same lamp upon a high tension current, and found that consequent poles were developed in the iron; and the lamp, although it worked, it did so under great disadvantage. Mr. Field at the time examined the lamp, and while he spoke well of its mechanism, remarked one day, "Pendleton, you have got a bug in that lamp." "Well," said I, "I have; but how did you find it out?" "Well," he said, "I had the same difficulty some years ago in meeting with consequent poles." I then told him my experience with the lamp—that with a low tension it ran perfectly well, and then consequent poles were not formed. I remedied it, however, by placing upon each core the two differential coils, on each spool the coarse wire and the fine wire. Now in this action spoken of between the high and low tension currents, I think there may be some similarity of action, and it is a matter that has not been thoroughly ventilated. I have never been able to account for it. I remedied it, but the cause of it I have never been able to ascertain. There are a great many things in the matter of magnetization, simple though it may be, that we are a little foggy about.

At the request of the president, Mr. Shelbourne took the chair, and Mr. Martin read a paper entitled, "A Few Comparative Statistics of Electrical Railways." (See page 227.)

Mr. Martin—This paper is a substitute for the one for which I appear upon the programme. That was to have been prepared chiefly by my associate, Mr. Wetzler, who has been ill and consequently not able to prepare it.

DISCUSSION.

The Chairman; Gentlemen: This question of electric railways is one which is very full of promise; it is something which it seems to me will immediately develop extensively, and that within the next two years we will have five times the number of electric railways in operation that are now in operation.

This morning, Mr. Frank L. Pope, our worthy past president, made some statements in regard to investigations which he had made with reference to that subject, and I at that time felt on the point of asking, as he did not state the location of the proposed railway, nor what storage battery he had calculated upon; whether in his calculations he took as the basis the storage battery that he had investigated, that is the Julien battery, as I understand, and whether he made any estimate as to the comparative percentage of cost for running a car per mile hour with such a battery as compared with horse-power.

Mr. Frank L. Pope—In reply to the chairman I would say that I did not specify the kind of battery used nor the railway that we were making tests for, simply because I did not wish to be regarded as having advertising purposes in view, but I have no objection to giving the information. The investigations were undertaken for the West End Street Railroad Co. of Boston, and the battery, of which we have completed a test, is the Julien battery. I may add that we have devoted much attention to getting, as nearly as we can, in the absence of actual experiment on the road under working conditions, at the probable comparative cost of power of different methods of running, and I think it will come out about seven cents per car mile by accumulators, as against 10 to 11 cents per car mile by horse-power. Experience may modify these figures; but I do not imagine they will be far from the true cost. We have spared no pains or expense to get accurate data on all the points involved. The management of the West End company have shown a most commendable spirit of liberality, throughout.

The Chairman—It seems to be necessary, gentlemen, in order to get through in time this afternoon that we hurry on to the next paper which is by Mr. J. A. Powers, of Troy, on the Installation of Arc Lighting Plants.

Mr. J. A. Powers—Mr. President and gentlemen; there seems to have been a pleasing variety of misunderstanding about my subject. Arc lighting plants are included in my paper; but I had proposed to treat of the installation of central stations, or rather of Central Station Construction. (For Mr. Powers's paper, see page 215.)

The Chairman—A short discussion upon this paper will be in order. The paper seems to be such as to recommend itself to us all, and perhaps everybody will assent to everything that was said, and will have nothing to add in the way of suggestion.

The next paper is on the Change from Negative to Positive of the Temperature Co-efficients of Some Carbon Filaments, by Prof. Anthony.

Prof. Anthony—Mr. President and gentlemen of the association: I am very much chagrined, as I am obliged on this occasion to ask to be excused from reading a paper. We have been at work, for some time, upon this matter, but have only reached some results which I will give to you in a brief way, orally. We have not, so far, reached anything upon which I could make out a written paper, so I will simply state a few facts that have been reached.

We found at first, in the testing of a dozen incandescent lamps for the purpose of determining their efficiency, with paper carbons and filaments—we were simply making measurements for the purpose of determining the ordinary electrical efficiency of the lamps—we found that the curve, representing the relation between potential and resistance, ran like this (illustrating), the potential being represented by the abscissæ, and the resistance by the ordinates. Now, it had been my experience that the resistance of incandescent lamps, or carbon filaments, ran down when the potential ran up, and this was the first instance in which I had found an increase of resistance as the potential went on—as the current increased, and of course as the illuminating power increased. In these particular lamps this change occurred very low in the temperature of the lamp. It occurred when the lamp, in fact, was only just barely red hot,

Digitized by Google

and the resistance went on up to the limit to which the lamps were carried.

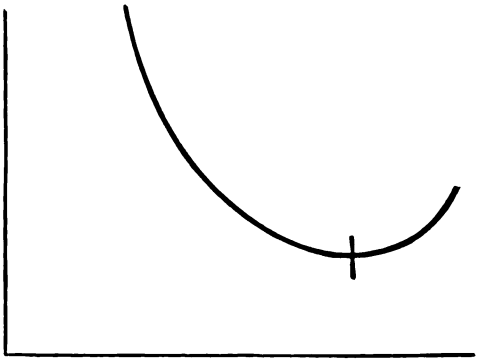

Afterwards, we thought this was of sufficient interest to pursue it in regard to other lamps. We have tested a number of lamps, and we have found in some four or five different cases the same general result. Sometimes the curve does not change until we have reached the normal candle power of the lamp, and in many lamps we have tried we never have reached any such change, the curve going on downward as far as the lamp could be carried, and in fact until the carbon began to disintegrate, in which case, of course, if we go back, if we take the points on the curve, in the first place, raising the potential point by point and carrying it up by this (illustrating), if we get to a point where the carbon begins to disintegrate and then go back, lowering the potential point by point, the two curves will not coincide. We have found, in some cases, that the curve went down like this (illustrating), and turned up like that (illustrating), at the lower end; but when we went back we found our resistance was permanently increased on account of change in the character of carbon. But it is certain that in a number of different carbon filaments there is this change of resistance, and in all the carbon filaments that we have tried, except one or two, there is a change that indicates that at some point the curve runs like that (illustrating); that at some point there would be a rise, if we could carry the temperature far enough.

Now, what I hoped to be able to present to this meeting was the determination of something about the character of the carbon filaments, which showed the change early in the temperature of the lamp, where that change began at very low temperature, to determine the difference in the character of the carbon filaments at this point; of the filaments which showed this change, and of those which did not show it, and those which showed a continuous fall of potential. That I have not been able to do; and furthermore, it was a point to determine the actual temperatures of the carbon. Those we have obtained with some degree of satisfaction, but I do not feel that our results are sufficiently trustworthy to present them, and, therefore, I am obliged to ask to be excused from attempting to present anything further on this point.

Prof. Thomson—The observation of Prof. Anthony is quite interesting to me, because one of our men reported two or three weeks ago the same phenomenon as noticed in lamps; that is, that at a certain brilliancy the resistance came to a constant, and then began to rise as the brilliancy was increased. I told him, at the time, to pursue that a little further and let us have some better figures. He reported, too, that all lamps did not appear to do it to the same extent. There is another curious fact that was noticed, and that has been reported to me, in regard to resistance of incandescent lamps. We are building lamps that are run in series on arc light circuits, using 6 8-10 to 10 amperes, and they are put in with the arcs and give a candle power of 32, 65 and 125. We find that when those lamps are run for a certain time, during the early part of the run—for perhaps 200 or 300 hours of the run—the resistance steadily falls. After that it seems to rise steadily, or, in other words, this effect comes in as a sort of an effect of time as well as simple brilliancy. The lamps fall in the volts necessary to carry the normal current through them. It does not amount to a large percentage, but it continues during a large fraction of the life of the lamp, and after that point the resistance begins to gradually rise, and not only has that fact been noticed in regard to the lamps of large candle power and comparatively heavy filaments of low resistance, but it has been noticed that in lamps that have been run on arc light circuits, in multiple groups, the same fall and gradual increase seems to take place; and it led us to imagine that there might be some connection between the arc light current itself and this effect. We have not noticed the same effects on multiple arc circuits, and we have not examined very thoroughly into the matter; but we have no reason to suspect, at least now, that this fall and gradual increase occurs on multiple arc circuits; but it seems to occur oftentimes—not always—in lamps that are put on arc light circuits, either in group or in series, taking the whole current.

The hour of adjournment being so near, the paper of Mr. David Brooks on Lead-Encased Conductors (see page 224), was read by title only.

The President—Is there any business before the meeting?

Mr. R. W. Pope—I have two resolutions that I would like to offer:

Resolved, That the sincere and heartfelt thanks of the American Institute of Electrical Engineers be, and are hereby extended to the American Society of Civil Engineers, and its able and hospitable secretary, Mr. John Bogart, and his assistants, for their continued favors and courtesy tendered to us, beginning with the organization of this society and continued during its progress toward its final establishment upon a firm and enduring basis.

Resolved, That whereas imitation is the sincerest form of approbation, we pledge our efforts to exercise our means and energies to the immediate establishment of a home of our own, in which we hope hereafter to extend our hospitality to all engineers of every branch, who may desire to avail themselves of the information developed, as the introduction of electric industries grows in public importance.

The resolutions were adopted.

Mr. R. W. Pope—I also beg leave to offer the following resolution:

Resolved, That the members and associates of the American Institute of Electrical Engineers, as a slight appreciation of the courtesies extended to them by Mr. Erastus Wiman, president of the Telemeter Company, and Mr. C. C. Martin, chief engineer of the East river bridge, do hereby extend their hearty thanks for the thoughtfulness and hospitality of those gentlemen in providing a most enjoyable scientific and social entertainment in connection with their annual meeting.

The resolution was adopted.

The President—We have all had a day of great pleasure and profit, and we shall go to our regular daily duties refreshed and benefited, and better able to do the work that lies before us.

There being no further business, a motion to adjourn is in order.

On motion, the meeting then adjourned.

AMERICAN INSTITUTE OF ELECTRICAL ENGINEERS.

CONTRIBUTIONS TO THE BUILDING FUND.

Prof. W. A. Anthony	$ 50
C. S. Bradley	200
W. M. Callender	100
C. A. Cheever	100
Curtis & Crocker	100
T. A. Edison (first)	100
S. D. Field	100
W. K. Freeman	50
G. A. Hamilton	50
F. Benedict Herzog	250
" " (Conditional)	250
W. T. Hunt	10
W. J. Johnston	500
E. H. Johnson (first)	100
F. W. Jones	100
Julien Electric Co. (Wm. Bracken, pres.)	100
T. C. Martin (first)	100
Capt. Michaelis, U. S. A.	20
J. F. Morrison (first)	200
G. M. Phelps	100
G. M. Phelps, Jr	100
R. W. Pope	100
Pope, Edgecomb & Terry (first)	250
Gerritt Smith	25
J. Eliot Smith	20
F. J. Sprague	50
C. E. Stump	100
W. C. Temple	25
Prof. Elihu Thomson	100
F. R. Upton	50
W. Wallace	100
J. Wetzler	100
S. S. Wheeler	100
Edward Weston	250
Total to May 28th	$3,950

Digitized by Google

AMERICAN INSTITUTE OF ELECTRICAL ENGINEERS.

OFFICERS AND MEMBERS OF COUNCIL, 1887-8.

President: T. Commerford Martin.

Vice-Presidents: Dr. Norvin Green, Prof. W. A. Anthony, George C. Maynard, Frank L. Pope, Col. Rowland R. Hazard, Prof. Elihu Thomson.

Managers: Sidney F. Shelbourne, Capt. O. E. Michaelis, U. S. A., Prof. Cyrus F. Brackett, C. O. Mailloux, Charles L. Buckingham, David Brooks, Prof. B. F. Thomas, Schuyler S. Wheeler, Joseph F. Wetzler, A. C. Fowler, William Lee Church and Edward P. Thompson.

Secretary: Ralph W. Pope, 16 Dey street, New York.

Treasurer: George M. Phelps, Jr., 11 Wall street, New York.

LIST OF HONORARY MEMBERS, MEMBERS AND ASSOCIATES, MAY 25TH, 1887.

Adams, H. C., New York.
Allen, George D., New York.
Anderson, H., Peekskill, N. Y.
Abernethy, J. P., Cleveland, O.
Anthony, Prof. W. A., Ithaca, N. Y.

Blake, Edward, New York.
Bruns, Lieut. C. L., Bergen Point, N. J.
Brown, Samuel J. T., Hamilton, Ont.
Bates, D. H., New York.
Buckingham, Charles L., New York.
Bulen, George F., New York.
Bailey, H. L., New York.
Bogart, John, New York.
Beetle, George L., New York.
Berliner, E., Washington, D. C.
Bosch, Adam, Newark, N. J.
Bell, Prof. Alexander Graham, Washington, D. C.
Brush, Charles F., Cleveland, O.,
Brackett, Prof. Cyrus F., Princeton, N. J.
Baker, L. C., St. Louis, Mo.
Blackwell, R. W., New York.
Brown, Walter F., New York.
Bernard, E. G., New York.
Brooks, E. H., Lebanon, Pa.
Bradley, Charles E., Yonkers, N. Y.
Bracken, Wm., New York.

Cheever, Charles A., New York.
Chinnock, C. E., New York.
Clarke, Charles L., New York.
Cleveland, W. B., Cleveland, O.
Cross, Prof. C. R., Boston, Mass.
Curtis, Charles G., New York.
Coyle, John H., St. Louis, Mo.
Callender, W. M., New York.
Crocker, Francis B., New York.

Davis, Joseph P., New York.
Delany, P. B., New York.
Dickerson, E. N., Jr., New York.
Durant, George F., St. Louis, Mo.
Dana, R. K., New York.
Douglas, F. A., Lockport, N. Y.
Diehl, Philip, Elizabeth, N. J.
Duxbury, J. W., Boston, Mass.
Doremus, Dr. Charles A., New York.
Daft, Leo, Greenville, N. J.
Davis, Minor M., New York.

Edison, Thomas A., New York.
Eils, B. E. J., Washington, D. C.
Emmet, Herman L. R., New York.
Edgar, C. D., New York.
Ellinger, J. O., New York.

Forbes, W. H., Boston.
Farmer, Prof. Moses G., Eliot, Me.
Field, Stephen D., Yonkers, N. Y.
Fuller, George W., Norwich, Ct.
Freeman, Walter K., New York.
Fowler, A. C., New York.

Gilliland, E. T., New York.
Green, Dr. Norvin, New York.
Gould, Charles W., New York.
Glidden, Charles J., Lowell, Mass.
Gifford, Capt. H. N., Louisville, Ky.
Gisborne, Hartley, Battleford, Manitoba.

Healy, Clarence L., New York.
Houston, Prof. Edwin J., Philadelphia.
Hebard, George W., New York.
Hamilton, George A., New York.
Hopkins, George M., New York.
Hewitt, Robert, Jr., New York.
Hazard, Rowland R., New York.
Hochhausen, William, Brooklyn, N. Y.
Holmes, Edwin, New York.
Haskins, Col. Chas. H., New York.
Hall, Clayton C., Baltimore, Md.
Helmer, P., Clinton, Iowa.
Hotchkiss, Clark B., New York.
Hunter, R. M., Philadelphia, Pa.
Herzog, F. Benedict, New York.
Harding, H. McL., New York.

Insull, Samuel, New York.
Iselin, Henry I., New York.

Johnston, W. J., New York.
Jones, F. W., New York.
Jensen, Henry, Bristol, Pa.
Jackson, Dugald C., Ithaca, N. Y.
Jackson, Caleb H., Allegheny, Pa.

Kintner, C. J., Philadelphia, Pa.
Kelly, James F., New York.
Kelly, John F., Newark, N. J.

Lockwood, Thomas D., Boston, Mass.
Leland, H. W., Jersey City, N. J.
Longstreet, J. H., New York.
Leonard, M. B., Richmond, Va.
Ledoux, A. R., New York.

Maloney, J. A., Washington, D. C.
McKinstry, J. P., Cleveland, O.
Mailloux, C. O., New York.
McDonough, James W., New York.
Martin, T. Commerford, New York.
Madden, O. E., New York.
Morrison, J. Frank, Baltimore.
Maynard, George C., Washington, D. C.
Moore, M. F., New York.
Mason, Fred. A., Bridgeport, Conn.
Millis, Lieut. John, New York.
Michaelis, Capt. Otho E., West Troy, N. Y.
McCollum, Thos. C., League Island, Pa.
Miller, Joseph A., Providence, R. I.
Mills, Frank P., Chicago, Ill.
Mansfield, George W., Cleveland, O.
Mitchell, John Murray, New York.
Moses, Otto A., New York.
Morton, Prof. Henry, Stevens Institute.

Noonan, J. F., Paterson, N. J.

Oppenheim, E. C., New York.

Plush, Dr. S. M., Philadelphia, Pa.
Pope, Franklin L., New York.
Phelps, George M. Jr., New York.
Preece, W. H., London, Eng.
Pope, Ralph W., New York.
Phillips, Eugene F., Providence, R. I.

Rae, Frank B., New York.
Roome, H. C., New York.
Redman, G. A., Rochester, N. Y.
Royce, Fred. W., Washington, D. C.
Robeson, D. S., Chicago, Ill.
Robertson, James H., New York.
Reilly, J. C., Brooklyn, N. Y.
Ross, James S., Nashville, Tenn.
Roberts, E. P., Cheyenne, Wyo.
Raymond, Charles Ward, Chicago, Ill.
Roberts, I. L., New York.

Schuyler, S. D., New York.
Scott, George B., New York.
Seely, J. A., New York.
Smith, Gerritt, New York.
Stockly, George W., Cleveland, O.
Smith, Jesse M., Detroit, Mich.
Sperry, Elmer A., Chicago, Ill.
Sargent, W. D., Brooklyn, N. Y.
Splane, W. W., Bradford, Pa.
Shelbourne, Sidney F., New York.
Smith, L. L., Ansonia, Conn.
Smith, W. W., Kansas City, Mo.
Stanley, Henry D., Bridgeport, Conn.
Smith, J. E., New York.
Stagl, Charles, Boston, Mass.
Stump, Clarence E., New York.
Stockbridge, George H., New York.
Sprague, Frank J., New York.

Thomson, Prof. Elihu, Lynn, Mass.
Trowbridge, Prof. W. P., New York.
Thayer, H. B., New York.
Terry, Charles A., New York.
Temple, William C., New York.
Trumbo, Isaac, San Francisco, Cal.
Turner, W. S., New York.
Thompson, Edward P., New York.
Tuckerman, W. C., New York.

Upton, Francis R., New York.

Vansize, W. B., New York.
Vail, Theodore N., New York.
Van Valkenburgh, F. S., Mexico City.
Van Vleck, Frank, Ithaca, N. Y.

Weston, Edward, Newark, N. J.
Williams, Charles, Jr., Boston, Mass.
White, H. C., New York.
Wetzler, Joseph, New York.
Waring, Richard S., Pittsburgh, Pa.
Wallace, William, Ansonia, Conn.
Whiting, Charles B., Worcester, Mass.
Widmayer, W. F., New York.
Walker, Sydney F., Cardiff, Eng.
Wilson, J. Chester, Philadelphia, Pa.
Ward, Henry H., New York.
Wheeler, Schuyler S., New York.
Wagemann, Edmund, Decatur, Ill.
Wright, Alex. P., Plainfield, N. J.
Wiman, W. Dwight, New York.
Weaver, W. D., New York.
Worthington, George, New York.

Zalinski, Lieut. E. L., Fort Hamilton, N. Y.

Digitized by Google

TRANSACTIONS OF THE AMERICAN INSTITUTE OF ELECTRICAL ENGINEERS.

VOL. I, 1884.

Historical Preface. Notes on Phenomena in Incandescent Lamps. (Illustrated.) Prof. Edwin J. Houston of Philadelphia. Discussion by N. S. Keith, W. H. Preece and James F. Kelly.

Underground Wires. (Illustrated.) W. M. Callender of New York. Remarks by Mr. Preece.

Synchronism. (Illustrated.) Prof. Edwin J. Houston. Discussion by P. B. Delany, C. O. Mailloux, C. J. Kintner, W. D. Sargent, George C. Maynard.

The Delany Synchronous Multiplex System of Telegraphy. (Illustrated.) Prof. Edwin J. Houston.

The Scientific City Street. (Illustrated.) Rowland R. Hazard of New York.

An Experimental Method of Studying the Dynamo Machine. By Prof. C. F. Brackett of Princeton, N. J. Discussion by N. S. Keith, Prof. Brackett, Elmer A. Sperry and James F. Kelly.

Earth Wires; or the Earth as an Electric Circuit Completer. Thomas D. Lockwood, Boston, Mass.

Telegraphing Without Wires—An Experiment. (Illustrated.) S. J. M. Bear. Discussion by James F. Kelly, N. S. Keith, Aug. Partz, H. L. Bailey, George C. Maynard, W. H. Preece, W. D. Sargent.

Chemistry of the Carbon Filament. Edward P. Thompson of New York. Discussion by N. S. Keith and John Kelly.

Depositing Vats in "Series." H. B. Slater, now of Detroit, Mich. Discussion by N. S. Keith, H. B. Slater, E. A. Sperry and J. F. Kelly.

The Patent Office; its Relation to Inventors and its Needs. C. J. Kintner (now of Philadelphia, Pa.) Discussion by Frankland Jannus, Prof. Houston, N. S. Keith and G. C. Maynard.

VOL. II, 1885.—ANNUAL AND GENERAL MEETINGS, May 19th and 20th, 1885.

The Protection of Electrical Inventions. Frankland Jannus of Washington, D. C. Discussion by F. L. Pope, E. P. Thompson, F. Jannus, T. D. Stetson, E. P. Roberts, T. C. Martin and S. F. Shelbourne.

Cost of Mine Lighting. F. P. Mills of Stambaugh, Mich. Discussion by E. P. Roberts, T. C. Martin, E. P. Thompson and J. F. Kelly.

The Electric Arc Lamp Frictional Clutch. (Illustrated.) Edward P. Thompson. Discussion by E. P. Thompson, S. F. Shelbourne, J. F. Kelly, E. P. Roberts, Prof. W. A. Anthony, Jean Wetmore, F. Jannus, G. A. Hamilton, H. B. Slater, F. L. Pope.

Description of a Large Secondary Battery Plant for General Commercial Distribution. E. P. Roberts, of Cheyenne, Wyo. Discussion by Prof. W. A. Anthony, Mr. Hall, F. L. Pope, R. W. Pope, S. F. Shelbourne, G. A. Hamilton, B. F. Card, T. C. Martin, Col. Rowland R. Hazard, Mr. Carey.

Delany's System of Fac-Simile Telegraphy. (Illustrated.) Prof. Edwin J. Houston.

VOL. III, 1886.—ANNUAL AND GENERAL MEETINGS, May 18th and 19th, 1886.

Underground Electrical Systems. Sidney F. Shelbourne of New York. Discussion by Thomas D. Lockwood, S. F. Shelbourne, C. O. Mailloux, George C. Maynard, Prof. C. A. Young, F. L. Pope, R. W. Pope, Capt. O. E. Michaelis.

The Great Tangent Galvanometer of the Cornell University. Prof. W. A. Anthony. Discussion by David E. Lain, C. O. Mailloux, F. L. Pope, Prof. C. A. Young, R. W. Pope, T. D. Lockwood.

Some Recent Advances in Telephony. (Illustrated.) Thomas D. Lockwood, of Boston, Mass. Discussion by R. W. Pope, S. F. Shelbourne, F. L. Pope, F. W. Jones.

The Patent Office and Patent Office Practice. A. C. Fowler of New York.

Static Difficulties in Telegraph Wires. F. W. Jones of New York. Containing a synopsis, with references to 113 American and Foreign patents for inventions intended to overcome these difficulties.

Secondary Batteries for Light and Power. A. H. Bauer. Discussion by F. L. Pope, C. O. Mailloux, S. F. Shelbourne, Joseph Wetzler, George C. Maynard, A. C. Fowler.

The Wire Gauge. Report of committee, and discussion by C. O. Mailloux, Capt. O. E. Michaelis, S. F. Shelbourne, Joseph Wetzler, R. W. Pope.

Notes on Dynamic Induction. Sidney F. Shelbourne.

VOL. IV, 1887. (In preparation.)—SPECIAL MEETING, Dec. 7, 1886.

Electric Street Cars. T. C. Martin, of New York. Discussion by John Murray Mitchell, Joseph Wetzler, M. Julien, C. J. Van Depoele, C. O. Mailloux, G. W. Mansfield, S. D. Field, J. M. Pendleton, Gen. Stiles; also a communication from R. M. Hunter.

SPECIAL MEETING, Feb. 6, 1887.

The Practical Requirements of Small Motors. Schuyler S. Wheeler, of New York. Discussion by Philip Diehl, Mr. Wing, Mr. Bradley, C. G. Curtis, J. M. Pendleton, G. A. Hamilton, T. C. Martin, F. B. Crocker, Joseph Wetzler.

SPECIAL MEETING, March 6, 1887.

Distribution of Electricity by Secondary Generators. Discussion by F. L. Pope, Dr. Otto A. Moses, Capt. O. E. Michaelis, Prof. Elihu Thomson, Joseph Wetzler, C. O. Mailloux, Wm. Lee Church, E. E. Ries, Alex. P. Wright, S. S. Wheeler, T. C. Martin, G. W. Mansfield.

ANNUAL AND GENERAL MEETINGS, May 17 and 18, 1887.

Storage Batteries in Actual Use. E. P. Roberts, of Cheyenne Wyo. Discussion by F. L. Pope, C. O. Mailloux and E. P Thompson.

Differing Temperature Co-efficients of the Different Coils of a Fine Rheostat. Prof. W. A. Anthony, of Cornell University. Discussion by William Wallace, F L. Pope, Prof. W. A. Anthony, George B. Prescott, Jr., Carl Hering, J. A. Powers, Capt. O. E. Michaelis.

On the Best Ratio of the Section of the Gramme Armature to the Section of the Field Magnets. (Illustrated.) Dugald C. Jackson, of Cornell University. Discussion by S. S. Wheeler, Mr. Bradley, Prof. Thomson, C. O. Mailloux.

Novel Phenomena of Alternating Currents. (Illustrated.) Prof. Elihu Thomson of Lynn, Mass. Discussion by S. S. Wheeler, George B. Prescott, Jr., Prof. Thomson, J. M. Pendleton, Carl Hering, J. A. Powers.

A Few Comparative Statistics of Electric Railways. T. C. Martin, of New York. (With tabular statement.)

Central Station Construction. J. A. Powers, of Troy, N. Y.

On the Change from Negative to Positive of the Temperature Co-efficients of Some Carbon Filaments. (Illustrated.) W. A. Anthony.

Lead-Encased Conductors. (Illustrated.) David Brooks of Philadelphia.

For copies, address,

R. W. POPE, Secretary, 16 Dey Street, New York.

CELEBRATION OF THE ONE HUNDREDTH MEETING OF THE NEW YORK ELECTRICAL SOCIETY.

A dinner in celebration of the one hundredth meeting of the New York Electrical Society, the electrical section of the American Institute, was given on May 11 at the D'Orville restaurant, in the Mills building. A special *menu* was prepared for the occasion, printed in electric blue of two tints on a white ground, with devices representing the electric light, the telephone and the telegraph, the two cards used being tied at the top with red telephone cord.

After the cloth had been cleared, the president of the society, Mr. John M Pendleton, gave a most interesting historical sketch of the work of the body—which now has a membership not far short of 200—from 1881, the date of its formation. Early in the history of the society, a lecture delivered under its auspices at the Cooper Union, by Prof. H. S. Carhart, on "Radiant Energy" attracted an audience of no fewer than 1,500 people. Prof. Cleveland Abbe, of the U. S. Signal Corps, discussed at another time the subject of "Electrical Clocks." Prof. A. M. Mayer, of the Stevens Institute, lectured before the society on "The Laws of Ohm." Prof. Henry Morton, of the Stevens Institute, delivered another lecture on "The Storage of Electricity." Mr. H. A. Sinclair, the electrician of the Government Ordnance Station at Sandy Hook, discussed in a manner that attracted the general attention of the press and public, "Measuring the Velocity of Projectiles." Prof. Van der Weyde during the six years contributed scores of papers, illustrated lectures, memoranda, etc., on the most varying topics connected with electricity; and during the same period the following well-known electricians and experts, also contributed original papers: Messrs. F. W. Jones, G. A. Hamilton, F. W. Cushing, G. B. Scott, H. L. Bailey, J. Hamblet, C. S. H. Small, H. W. Pope, E. A. Leslie, G. K. Winter, A. A. Knudson, C. O. Mailloux, W. P. Phillips, N. S. Keith, S. P. Frier, P. B. Delany, A. E. Dolbear, L. J. Blake, T. D. Lockwood, P. Gannon, J. Wetzler, G. W. Mansfield, J. J. Ghegan, T. Wolcott, A. C. Fowler. This list, as read by president Pendleton, though necessarily not complete, showed how strong had been the interest in the society through several years, and how ready leading electricians had been to place their services at its disposal for the furtherance of its welfare and in the promotion of science.

The address of president Pendleton was followed by speeches from Mr. J. D. Reid, the veteran associate of Morse, in response to "The Telegraph"; Mr. C. O. Mailloux, to "Electro-Chemistry"; Mr. S. S. Wheeler, to "The Electric Motor"; Mr. H. C. Davis, to "Our Guests"—accompanying a brief, pithy reply with a capital, ringing song; Mr. A. A. Knudson, to "The Electrical Transmission of Energy"; Mr. R. Grimshaw, to "Our Sister Sections of the Institute"; Judge John A. Grow, to "Electricity and the Law"; and Mr. T. C. Martin, to "The Scientific Press"—Mr. Martin supplemented his address by the reading of a poem, "The

Digitized by Google

Polychromotelepantophotophonograph," the riotous humor and pathos of which induced in the electricians present an alternating current of tears and laughter. During the evening the secretary read letters of congratulation and regret at absence from Profs. G. F. Barker, E. J. Houston and H. Morton; Secretary W. H. Wahl, of the Franklin Institute; and Messrs. E. H. Johnson, G. W. Hebard, E. H. Goff, T. T. Eckert, W. J. Johnston, F. L. Pope and several others. The whole affair was of a most happy and interesting character, and will be long remembered with pleasure by all who participated.

Much interest was created by the examination during the evening of a volume, now very rare, being the report of the Commissioner of Patents for 1843, containing Morse's telegraph patent, and a description of the system patented by Ezra Cornell of laying wires underground in pipes. It was presented to the society by Mr. W. D. Baldwin, of Washington, D. C., accompanying his letter of regret not to be present.

BROOKLYN BRIDGE FREEZING AND COLD STORAGE CO.

EXHIBIT OF THE TELEMETER SYSTEM.

A very agreeable, and instructive episode, in connection with the meeting of the Institute of Electrical Engineers was supplied by the courtesy of Mr. Erastus Wiman, President of the Telemeter Co., who invited the members of the Institute and a number of other gentlemen, to visit the installation of the Brooklyn Bridge Freezing and Cold Storage Co., Tuesday afternoon, May 17th.

A large company assembled in the rooms under the New York approach of the bridge at 4:30 P. M., inspected the vaults and storage rooms, and after enjoying an elegant lunch provided by the hospitable entertainers, visited the power station of the Brooklyn bridge under the guidance of representatives of the Telemeter Co.

The application of the Telemeter system to the regulation of temperature in the preservation of meats and fruit, as shown in this extensive establishment was extremely interesting. The temperature in the various receiving and storage rooms is maintained at from 12° to 20° F.

Each indicator in the office is electrically connected to a thermometer placed in one of the storage vaults or rooms. There are 30 in all. 4,000 feet of three conductor lead cable have been used in the installation. To keep the vaults and rooms at the required temperature, more than 12 miles of circulating pipes are required. The circulation of the cold brine through these pipes is controlled at the engine room by means of valves and the speed at the circulating pumps, for the proper regulation of which the engineer depends upon the temperature indications given by the instruments in the office.

Order, thoroughness, and the utmost neatness and cleanliness characterize every part of the establishment. All who were fortunate enough to be present will feel indebted to Mr. Wiman, Mr. Hewitt and their associates, for the opportunity of seeing this practical application of temperature regulation by means of electricity, as well as for their generous hospitality.

MANUFACTURING AND TRADE NOTES.

The Standard Underground Cable Co., in April, sold the Western Union Telegraph Co. 10 miles of cable having 19 conductors of No. 14 B. & S gauge, to be strung on one of the west side elevated roads. Also 19,100 feet of 30-conductor No. 14 B. & S. underground cable, to be laid in the Western Union underground five inch iron pipe conduits in Broadway. The Western Union company have now had in use since last year a similar underground cable made by this company, of 50 wires, one mile in length, through which they have been working, with perfect satisfaction, their heavy quadruplex circuits. The test has been a severe one, for the reason that the conduits lie alongside the Steam Heating Co.'s pipes the whole distance. The result is indicated in the above new orders.

The Standard Underground Cable Co., recently doubled the capacity of their factory. Mr. G. L. Wiley, the New York agent of the company, will remove about May 10th, into new offices in the Telephone Building, 16, 18 and 20 Cortlandt street.

The American Electric Manufacturing Co., has bought outright all the plants and franchise of the Gramme and Fuller-Wood Electric companies, and will hereafter operate such portions of these systems as the American may find desirable to put into use. The American had been paying royalties to the Fuller-Wood company running up in the tens of thousands last year, and now the purchase will put the former company in a more secure position, besides guaranteeing a larger profit through the absolute ownership as stated.

The Mutual Electric Manufacturing Co. have removed their factory from Washington and York streets to 292, 294 and 296 Graham street, near DeKalb avenue, Brooklyn. They have four times the room they occupied before, and add to their business the manfacture of the Julien storage batteries.

It is reported that Mr. W. L. Seddon, of 417 Pine street, St. Louis, is fulfilling a contract to put down two miles of his system of electric road at Wichita, Kas. He operates a series system. Unlike Prof. Short's road in Denver, however, or Bentley & Knight's, no conduit is used in his system, but an overhead conductor instead. The plant will be the property of the Riverside and Suburban Railway Co. The power house will be built with reference to a further extension of the line by three miles this summer. The Smith, Beggs & Ranken Machine Co. are building the engines, which will be from 80 to 100 h. p., and another local firm the cars. The Brush Electric Association will supply the dynamo. Mr. Seddon thinks it possible to run street cars by means of electricity at from six to nine cents per car per mile, against a supposed cost of 11 cents—perhaps as high as 18 cents in some cases—by horse.

INVENTORS' RECORD.

Prepared expressly for THE ELECTRICIAN AND ELECTRICAL ENGINEER, *by* Pope, Edgecomb & Terry, *Solicitors of Patents for Electrical Inventions, 11 Wall Street, New York city.*

CLASSIFIED LIST OF UNITED STATES ELECTRICAL PATENTS.

From April 19 to May 10th, 1887 (inclusive).

Alarms and Signals:—*Electric Signal for Weighing Scales*, E. S. Enyart, 361,275. *Combined Clock and Alarm for Hotels*, A. B. Harford, 361,511, April 19. *Water Level Alarm*, J. L. W. Olsen, 361,968. *Electric Bell*, E. W. Hazazer, 362,005, April 26. *Electric Signaling Apparatus*, S. Hiyne-Berline, 362,216. *Electric Police-Call Alarm Box*, J. J. Coughlin, 362,477, May 3. *Automatic Electric Danger-Alarm*, J. J. Ghegan, 362,739, May 10.

Clocks:—*Circuit-Controller for Self-Winding Clocks*, C. H. Pond, 362,902, May 10. (See Alarms and Signals.)

Conductors, Insulators, Supports and Systems:—*Branch Conduit for Electrical Conductors*, J. M. Clokey, 361,265. *Subway for Electric-Current Wires or Cables*, J. MacFarlane, 361,276. *Underground Conduit*, I. Paxson, 361,319. *Dielectric Composition*, C. T. Crowell, 361,347, April 19. *Electrical Conductor*, L. Daft, 361,676, April 26. *Electric Cable Clip*, C. C. Gould and W. Smith, 362,376, May 3. *Loop Insulator*, H. Van Sands, 362,682. *Insulating the Terminals of Sheathed Electric Conductors*, D. Brooks, 362,872, May 10.

Distribution:—*Apparatus for Distributing Electrical Power*, E. A. Sperry, 361,843. *Electric Inductive Translator*, W. Main, 361,770, April 26.

Dynamos and Motors:—*Fusible Connection for Armatures of Electric Generators*, J. W. Easton, 361,273, April 19. *Regulator for Dynamo-Electric Machines*, C. G. Perkins, 361,712. *Armature-Core for Dynamo-Electric Machines*, A. Schmid, 361,896. *Commutator for Dynamo-Electric Machines*, E. P. Warner, 361,973, April 26. *Regulator for Dynamo-Electric Machines*, E. T. and D. Higham, 362,510, May 10. *Electric Motor*, J. W. Easton, 361,274, April 19; R. J. Sheehy, 362,322, May 3. *Electro-Dynamic Motor*, C. J. Van Depoele, 362,798, May 10.

Galvanic Batteries:—*Galvanic Battery*, S. F. Walker, 361,794, April 26. *Voltaic Battery*, A. F. W. Partz, 362,531. *Electric Battery*, D. Misell, 362,584, O. Lugo, 362,847, May 10.

Lamps and Appurtenances:—*Electric Arc Lamp*, G. A. Wiese, 361,663, April 19; H. Pieper, Fils, 362,312, May 3. *Electric Lamp*, C. M. Noble, 362,852, May 10. *Incandescent Electric Lamp*, S. F. Van Choate, 362,128, May 3. *Safety Lamp for Use in Mines and Other Places*, M. Settle and D. Lever, 361,455, April 19. *Fusible Cut-Out*, C. G. Perkins, 361,713. *Gas and Electric Lamp Fixture*, J. T. Robb, 361,782. *Safety Device for Incandescent Lamps*, E. A. Sperry, 361,844 *Combined Lamp and Signal Post*, J. E. Smith, 361,901, April 26. *Support for Electric Lights*, A. G. Schlotterbeck, 362,399. *Compensating Mechanism for Regulating Electric Light Carbons*, J. A. Lakin, 362,289, May 3.

Measurement:—*Electric Current Indicator*, P. Lange, 362,451, May 3.

Metallurgy:—*Apparatus for Separating Metals from Ores or Alloys by Electrolysis*, H. Liepmann, 362,022, April 26. *Process of Depositing Iridium and Product of the Same*, W. L. Dudley, 362,257, May 3.

Medical and Surgical:—*Electro-Therapeutic Strength-Testing Machine*, E. R. Whitney, 362,133, May 3.

Miscellaneous:—*Electrical Induction Apparatus*, M. H. Gross, 361,587. *Automatic Electric Damper-Regulator*, E. N. Dickerson, Jr., 361,270. *Lightning Rod*, C. F. Hill, 361,520, April 19. *Binding Device for Electrical Apparatus*, I. W. Litchfield, 361,705. *Electric Covering for Indicating Abnormal Conditions*, G. J. Jewill, 362,010. *Registering Apparatus*, C. F. W. Doehring and C. A. Hoffman, 361,678. *Electric Rope-Coupler*, S. B. Stewart, 361,731. *Electric Valve-Operating Mechanism for Elevators*, G. H. Reynolds, 361,778 and 361,780. *Means for Electrically Controlling the Operation of Elevators*, same, 361,779. *Electro-Magnetic Rock Drill*, H. N. Marvin, 361,829. *Ozone Apparatus*, A. and L. Q. Brin, 361,923, April 26. *Electric Rock Drill*, C. E. Ball, 362,053. *Multiple Subsidiary Ground Terminal for Lightning Rods*, J. W. Cole, 362,062. *Lightning Rod*, E. O. Daniels, 362,064. *Connector for Electrical Appliances*, C. G. Perkins, 362,108. *Polarized Electro Magnet*, J. C. Wilson, 362,135. *Electrical Circuit Closer*, G. E. Thaxter 362,192. *Electric Regulator of Heating Apparatus*, R. L. Guion, 362,212. *Electric Switch*, A. Swan, 362,469, May 3. *Lightning Rod*, F. Westcott, 362,801. *Variable Electric Resistance*. J. M. Stearns, Jr., 362,859, May 10.

Railways and Appliances:—*Electrical Railway*, S. H. Short and J. W. Nesmith, 362,323, May 3. *Railway Signaling*, S. B. Stewart, 361,730, April 26. *Railway Signal*, P. J. Wicks, 362,409, May 3.

Secondary Batteries:—*Method of Working and Forming Secondary Batteries*, W. I. Ludlow, 362,639. *Secondary or Storage Battery*, same, 362,640, May 10.

Telegraphs:—*Telegraphy*, F. Van Rysselberghe, 361,734, April 26. *Duplex Telegraphy*, G. W. Gardanier, 361,356; J. W. Larish and W. Maver, Jr., 361,364. *Method of and Apparatus for Signaling Through Submarine Cables*, M. G. Farmer, 361,498. *Calling Apparatus for Telegraph Circuits*, J. W. Larish, 361,365, April 19. *Switch and Circuit for Telegraphs*, S. Weaver, 361,797, April 26.

Telephones, Systems and Apparatus:—*Telephone*, C. S. Bell, 361,481. *Mechanical Telephone*, M. Garl, 361,499. *Mechanical Telephone Line-Hanger*, G. W. Lord, 361,302, April 19. *Magneto-Electric Telephone Call*, G. A. Wilkins, 361,737, April 26. *Telephone Support*, S. Rosenblatt, 362,115. *Multiple Switch Board*, M. G. Kellogg, 362,217, May 3. *Testing Apparatus for Telephone Exchange Switches*, J. J. O'Connell, 362,652, May 10.

Digitized by Google

THE ELECTRICIAN
AND
ELECTRICAL ENGINEER.

Conducted by F. L. POPE. G. M. PHELPS, JR., Associate Editor.

PUBLISHED MONTHLY BY

THE ELECTRICAL PUBLISHING CO.,

115 Nassau Street, New York city.

European Agent, F. H. WEBB, 4, The Sanctuary, Westminster, London, S.W., Eng.

TERMS OF SUBSCRIPTION.

United States and Canada,	per annum,	$3.00
Four or more Copies, in Clubs (each)	"	2.50
One Copy, Four Months,		1.00
Great Britain and other Foreign Countries within the Postal Union	"	4.00
Single Copies,		.25

[*Entered at the Post Office at New York, N. Y., as second class mail matter.*]

EDITORIAL ANNOUNCEMENTS.

Addresses.—*Business letters should be addressed and drafts, checks and post-office orders made payable to the order of the* ELECTRICAL PUBLISHING CO. *Communications for the attention of the editors should be addressed,* EDITOR OF THE ELECTRICIAN AND ELECTRICAL ENGINEER, 115 *Nassau Street, New York city.*

Communications *suitable for our columns will be welcomed from any quarter. Discussions of subjects relating to all branches of electro-technical work, by persons practically acquainted with them, are especially desired. Unavailable and rejected manuscripts will be returned only when accompanied by the necessary postage.*

Advertisements.—*We can entertain no proposition to publish anything for pay, or in consideration of advertising patronage, except in our advertising columns. Our editorial columns will express our own opinions only, and we shall present in other columns only such matter as we consider of interest or value to our readers*

NEW YORK, JULY, 1887.

JUBILEE DAYS.

DURING the last ten days of June, the English jubilee over the fifty years of Queen Victoria's reign has spread its genial influence over the whole civilized world. Rejoicing is contagious. Even those who scarcely comprehend the significance of the festival, or comprehending, are not in sympathy with the ideas and principles thought to be involved in it, are infected with the enthusiasm of the day in some degree. It is with good reason that the world rejoices. The celebration is less for the personal career and length of days of the British Queen, although so amply due thereto, than for the continued prosperity and advancement of the English speaking races along their time-honored lines of careful and deliberate development; a glorification of the method of steady growth in national life, social and political, in contradistinction to the methods of upheaval and revolution; loyalty to the past and present with a steady outlook forward to amelioration of the common lot of the people and the abolition of faults and abuses. In England and America, the periods called revolutionary have resulted from popular effort to secure a return to principles of government running far back in the history of the Anglo-Saxon race, rather than attempts to establish new theories of social and political right. In steadfast adherence to this racial method of growth and evolution lies the hope of the future. After a thousand years on this path, England is the foremost nation of the world commercially and politically, and in much that makes for the happiness and contentment of her people. Her traditions of liberty are having a further and perhaps more rapid development in our own country, but let us not forget, that our marvellous growth in a hundred years into a great and free nation, second only to Great Britain, and fast overtaking her, could not have been achieved without the momentum of inherited traditions and principles of freedom and habits of political action which we derived with her from a common past.

In rejoicing with all Britons during these festival days, and sharing the enthusiasm expressed in the magnificent pageantry of June 21st., in London, we are not unmindful that very much yet remains to be accomplished, not only in Great Britain, but in America, to better the lot of large classes of the population. The real cause for jubilation is that the social and political methods exemplified in English and American history have tended steadily to increase the possibilities of comfort, success and contentment for the whole of the people. Ireland is still unhappy, large numbers of her people suffer hardship and privation for which England must be held largely responsible. But it is clear that much of the best talent in England is laboriously seeking a remedy for Irish troubles, and it can scarcely be doubted that they will succeed. To those people on this side of the Atlantic, from whose eyes the deplorable condition of Ireland shuts out the sight of all that is good and great in England, let us recall the days, not twenty-five years past, when all the world could point the finger of shame and scorn at us. Till we abolished slavery, the United States could not fully justify its claim to be the "home of the free," nor to the principles upon which its government was founded. We should be grateful that many of the wise and good of the world believed in us and our destiny, in spite of our stiff-necked persistence in wrong-doing, and still more grateful that we have in large measure deserved their faith in us. Let us not lose confidence that our kinsmen of England will by patient work, and in good time, find a way to help both Ireland and themselves out of their humiliation and distress.

The coincidence of the royal jubilee with the fiftieth anniversary of the establishment of the telegraph by Wheatstone, in England, and of Morse's caveat for his invention filed in the United States patent office, in the same year, suggests still further the closeness of relation between Great Britain and America.

The honors of the jubilee of the telegraph are properly divided between the two countries. Without failing to honor the inventors and investigators of other lands whose work contributed to the final result, the credit of devising and of establishing the use of electric telegraphs belongs to England and America—Cooke and Wheatstone established their first line in 1837, and Morse worked his telegraph over a line of half a mile in the same year. Development and extension followed in every civilized land at a marvelous rate, continents and oceans were crossed, and after forty years came Graham Bell with his telephone to extend indefinitely the range of every man's voice.

The many and striking applications of electricity in the arts of life that have followed the introduction of the telegraph have elicited the wonder, applause and acceptance of the world. Especially remarkable is the accelerated pace of development in the last fifteen years, which include

Digitized by Google

the reduction to practice of duplex and multiplex telegraphy, the invention of the speaking telephone, the firm establishment of electric lighting as a large industry, and the introduction to a large extent of electricity in the transmission of power for both stationary and locomotive purposes. In carrying forward this work, the inventors and manufacturers of England and the United States have kept their lead. The lines of effort have been somewhat different in the two countries. English electricians have given prominence to the theoretical and mathematical aspects of the problems involved, whilst American ingenuity has been largely devoted to practical experimentation and the invention of new methods and devices. The economic necessities of ocean telegraphy gave rise thirty years ago in England to the elaboration of refined methods of electrical measurements and their practice on a large scale, not only upon the great submarine lines projected and laid through English enterprise, but upon land lines everywhere. Before this, the practice of telegraphy followed relatively crude methods, with small regard to scientific principles of economy. Many of our own electricians will recall the revelation of waste and loss made by the first systematic application of English testing on American lines, twenty years ago, at the hands of Cromwell Varley; as well as the great improvement in the quality and economy of service attained through its continued and intelligent application. The lesson that cleverness and ingenuity, which had carried us through the early days, must be supplemented by accurate knowledge and sound methods, for the achievement of lasting success, was not lost upon us.

Let there be jubilation for all the good work of the last fifty years wheresoever and by whomsoever done—and let us join in celebrating the golden anniversary of the gracious Queen, whose reign has witnessed it all.

THE Institute of Electrical Engineers held the last of its series of special meetings for the season at Martinelli's, Fifth avenue, Tuesday evening, June 28th. As heretofore during the winter and spring, the meeting was preceded by a dinner at six o'clock. The meeting was called to order at 8 o'clock. Mr. Geo. W. Blodgett, of Boston, read a paper on "The Electric Lighting of Passenger Trains." A discussion followed by Messrs. R. W. Pope, Elias Ries, T. D. Lockwood, C. O. Mailloux, W. C Bracken, J. M. Pendleton and Jos. Wetzler. We print Mr. Blodgett's very timely and instructive paper in this issue. Before the paper of the evening was read, the House Fund Committee, through its chairman, made a report of its progress. The subscription had increased to $4,500, almost entirely within the membership, with $1,000 additional virtually pledged by a gentleman greatly interested in the work of the Institute. A most gratifying feature of the report was the committee's statement of the hearty support and co-operation extended to the Institute by the Society of Civil Engineers. The president and secretary of that society had been appointed to confer with the House Fund Committee of the Institute, upon plans for joint use of suitable premises. In the conference that was held, Mr. Worthen and Mr. Bogart in behalf of the Civil Engineers, expressed heartily their sense of the rapid growth of electrical engineering as a department of general engineering, and their desire to ally the Institute with their society for mutual advantage. Civil Engineers were finding it necessary to increase their acquaintance with the applications of electricity, in order to meet the demands upon them of clients desiring to consult them upon questions of electric traction and transmission of power, while the constantly broadening field of the application of electricity calls for much general engineering knowledge on the part of Electrical Engineers. A location in common, an assembly room in common, a union of libraries, with a suitable provision of separate apartments for the use of each society would, it was thought, be of much mutual benefit. It was thought likely that the Society of Mechanical Engineers, would come into such a scheme, and that ultimately all branches of engineering would have a common headquarters in New York. The plan first suggested at the conference of committees, viz., the purchase of a house adjoining the present building of the Civil Engineers, had fallen through, the owner being unwilling to sell. The Institute committee would have a further conference with the Civil Engineers' committee in respect to further plans—among them that of the erection of a suitable house large enough to accommodate both societies.

THE letter of Mr. F. R. Welles, of Antwerp, printed in another column, criticising the wire gauge proposed at the last meeting of the National Electric Light Association, presents a number of weighty objections to the adoption of the gauge; not the least of which is the improbability, not to say impossibility, of getting it into anything like general use. Mr. Welles's relations are of such an international character as to give him exceptional advantages in learning the methods and customs of electrical business the world over.

From the considerable amount of suggestion and discussion that has appeared on the general subject of wire gauges during the last few years it has become very clear, that no attempt ought to be made to introduce any new gauge that is not by general consent superior to any existing gauge. Meantime the practice of designating sizes by mils or by millimeters is steadily increasing, and usually protects purchasers effectually from the confusion of the too numerous gauges now in existence.

WE look with much interest for the first number of the *Western Electrician*, a new weekly journal, announced to appear July 2d., under the management of Mr. W. A. Kreidler, of Chicago, associated with Mr. Wayland Clark, of the same city. Mr. Kreidler has for several years attended to the Western business of the *Electrical World*, and has accumulated valuable experience in electrical journalism. In everything western, one looks for energy and dash, and we make no doubt, that the *Western Electrician* will keep abreast of the current of western life and business, and keep an eye on what is going on in the rest of the world as well.

IT is not our practice to open our columns to personal controversies. It is gratifying that technical discussion so rarely assumes a personal form. The open letter of Dr. Stein, of Frankfort, the friend and associate of Philipp Reis, to Professor Houston, is printed in this issue, in deference to the high standing of the parties and in view of the interest and importance of the technical point in contention. May we be permitted, however, to express our trust that an *odium scientificum* is not to be developed in the hitherto placid courses of technical discussion? Now that the *odium theologicum* has been so long on the wane it were a pity, in the scientific world, to emulate its former virulence.

MR. FRANKLAND JANNUS replies in our columns to the attack upon the United States patent system by Mr. John McClary Perkins, printed in our correspondence last month. We are glad to have the subject discussed, and hope to hear from others acquainted with its merits through professional experience or otherwise. Probably few will agree with the extreme views of Mr. Perkins, and approve the suggested abolition of our system of patent office examinations and a reversion to the methods of England and most foreign countries, though many will be found to participate in dissatisfaction with many features of the administration of the patent system as it is.

Digitized by Google

ARTICLES.

DYNAMIC ELECTRICITY.

BY CARL HERING.

(Continued from page 220.)

CHAPTER VIII.—FIELD MAGNET COILS.—(CONTINUED.)

In order to calculate the diameter of the wire by this method, it is necessary to know the mean length of one winding of a magnet coil. But this is itself dependent upon the size of the finished coil which however is not yet known. A formula might, therefore, be deduced which should give the diameter of the wire directly without first knowing the length of a winding, but it has been found that such a formula is too complicated to be of much use to the practical builder of dynamos. In place of such a complex formula the following approximate method will be found to answer equally well, and to be much simpler in most cases.

If the depth of winding, or thickness of a coil, be too great, the proportions of the machine will not be the best, as the outside layers will be very long and far removed from the iron, and although the economy in the iron might be great yet the more important economy in copper will be poor, and the iron will probably be over-saturated. On the other hand if the depth of winding is too small, the economy of iron will be poor, that is, the magnets will be longer and therefore heavier than is necessary, while the economy of copper will be good. There must, therefore, be a certain depth at which the economy as a whole, considering both the iron and the copper, is best. Until more extended experiments have been made to determine more accurately the best proportions, it will be found to give fair results to make the depth of winding about one-third of the diameter of the core, if round, and one-third of the lesser diameter, if oval.

In order to find the mean length of one winding, it will be sufficiently accurate for all practical purposes to assume a depth of winding as described, and from this, together with the dimensions of the cross-section of the core, to calculate the mean length of a turn. If the thickness of the finished coil should then be found to be slightly different from that assumed, it will make very little difference in the mean length, for in an actual case it was found that diminishing the depth as much as 50 per cent. decreased the mean length of one turn only seven per cent.

For an oval coil not too flat the lengths of the inside and outside layers are in the proportion

$$\frac{a+b}{a+b+4c}$$

in which a and b are the length and breadth of the cross-section of the core and c, the assumed depth of winding. From this the mean length of a turn in inches will be

$$l_m = l + \frac{2cl}{a+b}$$

in which l is the periphery of the core or the length of one turn of the lowest layer, all dimensions being in inches. For a circular coil the diameter of whose core is D, the mean length of a turn will be

$$l_m = \pi (D + c)$$

which if c is one-third of D, becomes

$$l_m = \tfrac{4}{3} \pi D = 4.189\ D$$

Having thus found the mean length of a turn, there remains only to substitute its value in the above formula for d, in order to calculate the diameter of the bare wire, which when wound to the proper number of turns will have such a resistance as will enable the proper current to flow through the coils when the exciter has the potential stated at the outset. There is one condition however, which must be fulfilled, namely that the actual depth of winding should not exceed that which has been assumed, as the resistance may otherwise be too great. In general, if the actual depth of winding is found to differ greatly from that which has been assumed it shows that the magnets are not proportioned as well as they might be. It is necessary, therefore, to check the results obtained, and at the same time to see whether the magnet cores are properly proportioned, by proceeding as follows. Having calculated the diameter of the bare wire, as described, find what the outside diameter of the insulated wire is, which may be done by winding closely ten turns around a mandrel, and measuring the length of this small coil in inches and decimals, which when multiplied by 100, will give the outside diameter of the insulated wire in mils; let this be represented by d_1. Dividing this into the length of a core in inches multiplied by 1,000 to reduce it to mils, will give the number of turns per layer, and this divided into the number of turns per coil found at the outset, will give the number of layers, from which the depth of winding is readily found, as it may be taken approximately equal to the number of layers multiplied by d_1 in mils, and divided by 1,000 to reduce it to inches.

If this is found to be about the same depth of winding as that which was assumed at the outset, then the core and coils are properly proportioned, provided other points such as the heating of the wire and the over-saturation of the core have been guarded against. If, however, this actual depth is much greater than that assumed, it shows that the cores or coil spaces are too short, and should be lengthened to such an extent that when the same number of turns are wound around the new core, the depth of the coil will not exceed about one-third of the lesser diameter of the core. If this actual depth is only slightly greater than that assumed, it may not be necessary to lengthen the cores of that particular machine, though it is advisable to make the change on the pattern if it is to be used for other machines; in case it is not changed for that particular machine, it is advisable to make a new calculation for the depth and the mean length of a winding found from the first calculation.

If, on the other hand, the actual depth is found from the calculations to be less than that assumed, the machine may be finished without any alterations in the size of the core; but, as the core in this case is longer than it needs to be, it would be better for the sake of economy of iron, to shorten the cores so that the same number of turns on the shorter core would make the thickness or depth of winding about that which was assumed; the machine would otherwise be uselessly heavy.

It is assumed in these cases that the magnet frames are not over-saturated more than is desired, and that the coils do not heat too much. In order to guard against over-saturation, it is preferable first to make the test for saturation, which will be described in a subsequent chapter, in order to know to what extent the ampere-turns may be increased in case the magnet frame is over-saturated, or the cores improperly proportioned. This test gives the greatest number of ampere-turns which should be used on that machine. If the number of ampere-turns which are required to generate in the armature the required potential and current be found to exceed this limit, it shows that some or all of the iron parts of the machine are too small for the required magnetism, and that, if the machine is to be properly proportioned, the cross-section of the iron parts, measured perpendicularly to the lines of force, should be increased by a certain definite amount which can be calculated as described in chapter vii. If the iron is not over-saturated to a great extent, it may be possible to finish the machine without altering the size of the iron parts, by increasing the depth of winding or the amount of current or potential allotted to the coils, or both, but the machine will then evidently not have the best proportions. If, on the other hand, the number of ampere-turns, which are required to generate in the armature the required potential and current, be found to be much less than the limit obtained from the saturation

Digitized by Google

test, no alterations in the size of the iron parts are necessary, but as this shows that there is more iron than is essential to produce the required results, the machine is uselessly large and heavy, and therefore has not the best proportions. It would be preferable to reduce the cross-section of the iron parts, as described in chapter vii., in order that they may be just at the point of saturation, or slightly above it, if desired, for the sake of steadiness of current.

To guard against heating, the following general rules may serve as a guide: In large magnet coils the current density in the wire may be about .001 to .0015 amperes per square mil or .00079 to .0012 per circular mil[1] of cross-section of the bare wire, which is equal to about 1000 to 1500 amperes per square inch, or 1000 to 650 square mils per ampere, or 1300 to 850 circular mils per ampere. In magnet coils made of fine wire, as in shunt machines, the current density in amperes per square mil may be slightly higher than in coils of coarse wire, as in series machines. The size of the wire should, therefore, also be determined from the current in order to guard against heating, besides being calculated from the formula first given, in which it depends on the allowable resistance. Should these two values for the diameter differ, the larger of the two will have to be taken in order that both the resistance and the heating will not exceed the limits.

But a rule of this kind in which the current is limited only by the cross-section of the wire, although very simple in its application, is not sufficiently general to be relied upon in all cases. While it will give fair results for similarly proportioned coils, not differing too much in the actual sizes, it is less reliable for coils whose proportions and dimensions differ very considerably from those from which the constants were taken, which were ordinary oval machine magnets, not too long, having a moderate depth of winding, and which were exposed to the air on all sides. A much more reliable rule, though less convenient and not as simple in its application, is based on the following considerations: The heat in a coil is developed by the watts or volt-amperes which are consumed in the coil itself; this is a constant and continuous supply of heat which would continue to accumulate and ultimately destroy the coil if it were not continually dissipated from the outside surface of the coil as well as from the outside surface of the iron parts in the immediate neighborhood of the coil. The dissipation of the heat will depend on the temperature and on this exposed or outside surface, which for simplicity in calculations will be limited here to that of the coil alone. The coil will therefore increase in temperature until the heat dissipated is equal to that generated in it. In calculating a coil to guard it against heating too much, it is therefore better to consider only these two factors, namely, the watts consumed in the coil and the outside surface of the coil. The density of the current in the wire, or, in other words, the cross-section of the wire as compared to the current, may be neglected entirely, for it is evident that if the outside surface of the coil, and the number of watts consumed, be the same in any two coils, the heating will be the same no matter what the current per square inch is. For instance, suppose two magnet coils are wound so as to have the same external dimensions, one having two layers and the other one layer of the same sized wire; the resistance of the former will be about twice that of the latter. Now if the current is 10 amperes in the first case and 14 amperes in the second, the energy in watts will be about the same in both cases, and as the external cooling surface is also the same, the heating will be the same, notwithstanding that the current density is very much greater in the second case than in the first. The same result might be shown with coils of unequal sizes and shapes, having different depths of winding. In general, the current density may be greater the less the depth of winding or number of layers.

1. A circular mil is the area of a circle whose diameter is one mil.

In an article by Prof. George Forbes,[2] he deduces the following general laws regarding the heating of coils: In coils of the same size but wound with wires of different diameters, so as to occupy the same volume, the current must vary as the cross-section of the wire, in order that they attain the same temperature. In other words, in such coils the current density in the two wires must be the same. Another deduction is, that in two coils of similar shape (the linear dimensions and the diameter of wire of the one being n times that of the other), the squares of the currents will be proportional to the cubes of the linear dimensions when the heating is the same. In other words, if one coil is twice as large in all linear dimensions as another, and has wire of twice the diameter, the square of the current in the larger one may be made $2^3 = 8$ times as great as the square of the current in the smaller; that is, the current in the larger may be $\sqrt{8} = 2.8$ times that in the smaller, in order that both attain the same temperature.

In the same article he gives a formula which he states agrees with what is actually found in practice. From this the following practical rules may be deduced: A watt of electrical energy will be dissipated for every 800 square centimeters of external surface of the coil, when the temperature of the coil is 1° centigrade higher than that of the air; reducing this to our ordinary units, it is 223 square inches for 1° Fahrenheit. The number of watts which can be dissipated from a given surface of coil increases directly with the temperature which the coil may have above that of the atmosphere; that is, for double the increase in temperature the watts in the coil may be twice as great; or for the same allowable temperature, it increases directly as the surface of the coil is increased. The same rules may also be stated as follows: The rise of temperature above that of the atmosphere will be 1° centigrade for every watt and every 800 square centimeters of surface; or 1° Fahrenheit for every watt and every 223 square inches of surface. For the same surface it increases as the number of watts, or for the same watts it increases as the surface decreases. Every square centimeter will dissipate a watt at 800° C. above the atmosphere, and every square inch will dissipate a watt at 223° F. above the atmosphere. The surface must increase with the watts or decrease as the allowable temperature increases.

All these rules may be expressed by the formula,

$$W = \frac{1}{800}\, t\, s$$

in which W is the number of watts lost in the coil; t is the temperature in centigrade degrees *above* that of the air; s is the outside surface of the coil in square centimeters.

In the other units it will be

$$W = \frac{1}{223}\, T\, S = .004476\ T\, S$$

in which T is in Fahrenheit degrees, and S in square inches.

In place of the number of watts, W, may be substituted the equivalents $C\ E$, $C^2\ R$, or $\frac{E^2}{R}$, in which C, E and R represent the current, electromotive force and resistance, respectively, of the coil, the resistance being that at the temperature to which the coil may be raised. For instance, substituting $C\ E$ for W and reducing, gives

$$C = \frac{T\, S}{223\ E}$$

2. Proceedings of the Society of Telegraph Engineers and Electricians, March 24, 1884.

Digitized by Google

which gives directly the greatest current which can be used in the magnet coils of a shunt machine having a certain potential, in order that they do not heat above an allowable temperature; this current can therefore be calculated even before the winding has been determined, as it is independent of the number of turns or the resistance, if only the size of the external surface is known approximately; this maximum current should never be exceeded.

Numerous other useful formulæ can be deduced in the same way. For instance, if a maximum rise of temperature of 80° F. above that of the air is allowed for the magnets, the greatest allowable current will be

$$C = .36 \frac{S}{E},$$

or if the resistance instead of the electromotive force is known,

$$C = .60 \sqrt{\frac{S}{R}}.$$

Similarly for series wound magnets in which the current is known, the formula will give the greatest resistance which may be given to the coils in order not to heat too much; thus,

$$R = \frac{T\ S}{223\ C^2},$$

and if the limit is a rise of 80° F., the greatest allowable resistance will be

$$R = .36 \frac{S}{C^2}.$$

As these formulæ give the resistance at the higher temperature, allowance should be made for this increase in determining the resistance cold. Every degree Fahrenheit increases the resistance about two tenths of one per cent., (.2 per cent.) therefore at 80° above the normal temperature it would be $1 + (.002 \times 80) = 1.16$ times too great, and should therefore be divided by this number.

The same formula may be used equally well to find what the surface of a coil should be. Thus,

$$S = \frac{223\ W}{T}$$

which for a rise of 80° F. is

$$S = 2.8\ W.$$

As the number of watts to be allotted to the magnets is generally known approximately at the outset, this formula enables one to determine about what the least surface of the coils should be, and as the cross-section of the core is known, and by assuming a depth of winding of about $\frac{1}{3}$ the diameter, the least length of the core can readily be determined. This should, however, be used only as a guide, as the dimensions may have to be larger on account of the limited resistance of the coils.

In general, when the coils are short and have a great depth of winding, or when a relatively large percentage of the total energy of a machine is consumed in comparatively small coils (which is frequently the case in small, cheap, or poorly proportioned machines), the heating limit will determine the size of the coils, as the size calculated from the allowable resistance would give smaller values, which would cause them to heat too much. On the other hand, when the coils are long and have only a few layers, or when the percentage of energy in the magnets is comparatively small (which is frequently the case with large well proportioned machines), the sizes will depend chiefly on the allowable resistance, as the heating limit will generally give smaller values. But these are only general rules; they may vary greatly in special cases.

(*To be continued.*)

FLAD'S OVERHEAD WIRE SYSTEM FOR CITIES.

Much interest is manifested by electricians in the overhead wire system invented by Col. Henry Flad, of St. Louis, as a substitute for the expensive underground systems proposed for large cities. It was a bold and felicitous thought of Col. Flad, to hang electric wires from lofty towers, above the housetops for the most part, and high enough to avoid the difficulties experienced from ordinary pole lines.

The accompanying illustrations will convey a clear idea of the system in its general features.

Figure 1 gives an isometrical view of the towers and cables; figure 2, the elevation and plan of one span.

The towers are usually placed at street intersections, and consist of four iron columns, fixed at their lower ends in a foundation of masonry or concrete, and located at the intersection of the curbs. The posts slant towards the centre of the intersection of the two streets, and on top they terminate in a square frame, of about eight or ten feet side. The height of the towers is determined by the condition that the suspension cables stretched between the towers should, at their lowest points, be still above the uppermost windows of the houses already built, or probably to be built, along the street on which the towers are placed. Their height will, therefore, vary from 80 feet, in the suburbs, to 120, or even 130 feet in the business part of the city. The towers are placed at such distances apart, as will be most economical, either one, two, three, or four blocks, or say from 300 to 1,500 feet.

The steel wire suspension cables, by which the weight of the electric wires and cables is to be supported between the towers, are never less than two in number, and where two suspension cables only are used, their ends are fastened to the tops of adjoining towers in such a manner that they can be lengthened or shortened at will, within certain limits. This is necessary in order that the two cables of every span may be adjusted to the proper elevation and curve. When so adjusted, the two cables are parallel, and have the same elevation throughout the whole length of the span. The horizontal distance between the two cables is generally from 8 to 10 feet, and a vertical plane passing through the centre line of the street will pass through a line midway between the two suspension cables.

At short distances apart, say at every 25 feet, measured horizontally, the two suspension cables are connected by a stiff bar, or pipe, which will hold them at the proper distance apart when the wheels of the truck, hereafter to be described, pass over it, or when the wind or some other outside force tends to produce oscillation of the cables. On these cross bars, or tubes, are carried the electric cables and wires, resting on proper supports. At the centre of each cross-bar or tube, on all lines consisting of but two suspension cables, a vertical strut is attached to the lower side of the cross-bar, and from the lower end of this short strut, iron tension rods pass to the ends of the cross-bar or tube. The lower ends of the struts attached to all the cross bars, may be connected by a small wire, to keep them in a vertical position, under the effect of high winds. When a conducting wire is to be carried from the cross-bar to a house, it is first attached to the bottom of the strut, and thence to the house. Lines with only two suspension cables are used when the number of electric wires and cables to be supported is small, and may be designated as auxiliary lines.

On lines which have to accommodate a greater number of wires, a third steel wire suspension cable is added, which is stretched parallel to and about 8 or 10 feet below the two main suspension cables in a vertical plane passing through the centre line of the street. To the ends of the cross bars iron frames are fixed, and instead of the short struts used on the auxiliary lines, a long strut is used, extending from the centre of the crossbeam to the lowest point of the frame, and there strongly connected

Digitized by Google

with it. At the lowest point of the frame a fork is fixed, in which the third suspension cable can move freely up and down, while it is held by it against lateral motion. The frames carry, at short distances apart, insulators, to which single wires can be attached. When a wire is to be taken to a house, the single wire is led from its insulator on the side of the iron frame to the third cable, and thence, after having been attached to that cable, carried to the house, so that it shall not be in the way of the traveling truck, which will hereafter be described.

When the capacity of the line is to be still further increased—which will be necessary in but few cases—two more suspension cables are fastened to the towers, and stretched parallel to, and directly under the two first main cables, at such a distance below them that they are about the middle of the span of the main lines. When the two lines pass each other (at the lowest point of their catenaries), the suspension cables of the auxiliary line are so stretched that their lowest position is a little below the lowest point of the short strut attached to the cable cross-bar, when the main line, crossed by the auxiliary line, consists of but two suspension cables; and a little below the lower end of the frame on lines composed of three or five suspension cables. The two lines crossing each other are connected in such a manner that they can have an independent motion vertically, but steady each other against lateral oscillations. On very long spans, and when no auxiliary line crosses at the centre of the span, it might sometimes be necessary to steady the suspension cables against high wind, by attaching a wire at the lowest point

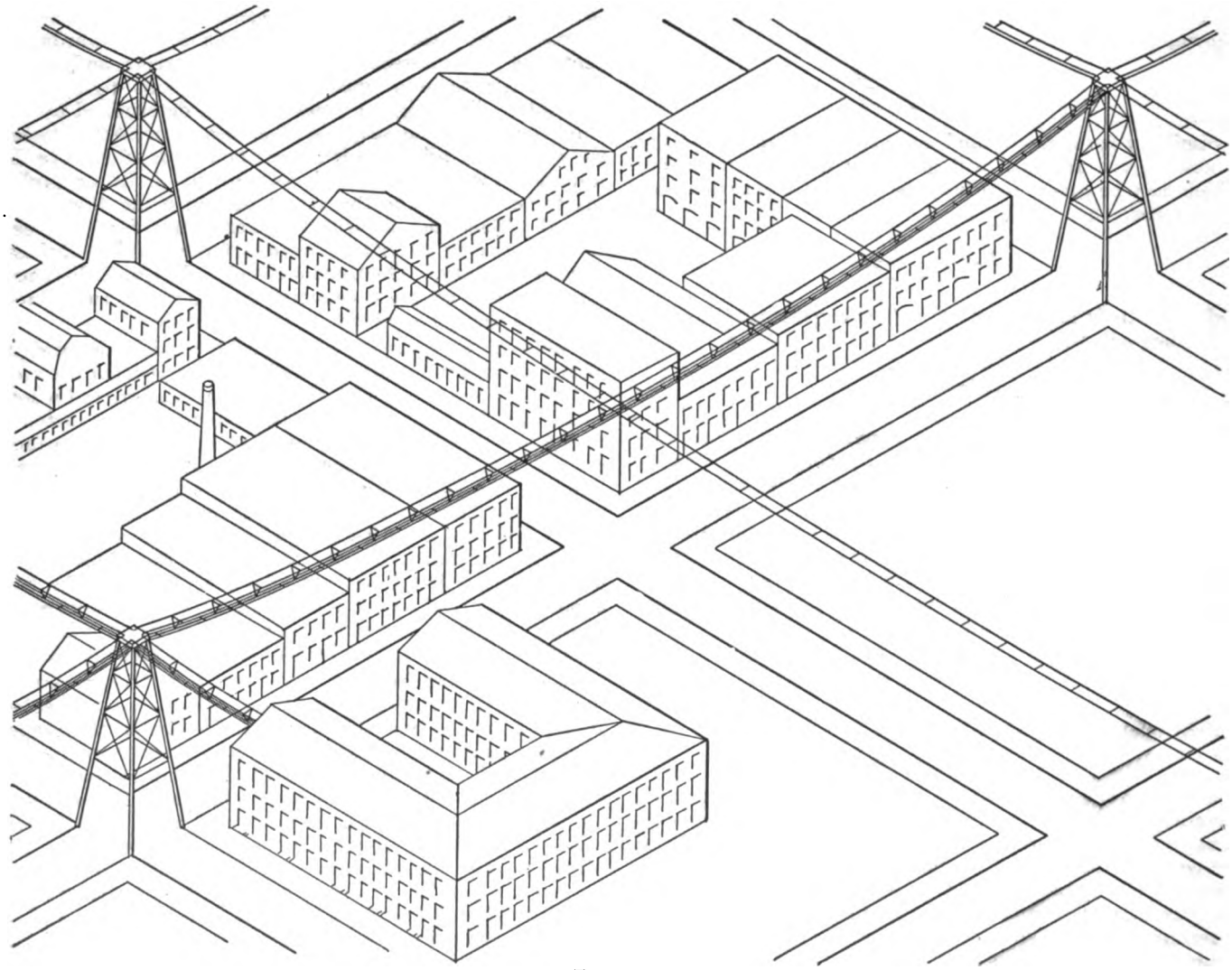

FIGURE 1.

on a level with the lower ends of the iron frames. These two suspension cables are connected together by cross bars, like the upper suspension cables, and their cross bars pass through forks attached to the lower ends of the frames; these forks allowing a slight vertical motion of the lower set of parallel suspension cables, but preventing lateral motion. The suspension cables are stretched to a catenary, having a very short versed sine, and, therefore, are under great strain, which, however, they are fully able to stand, being composed of the very best steel wire, but to which no other metal could be subjected. The suspension cables, in consequence of this small versed sine, are not much exposed to lateral oscillation from the effect of wind. But, for additional security, the lines, wherever practicable, are so arranged that the auxiliary lines pass through to each suspension cable, and fastening the other ends of the wires to vertical way posts, erected for the purpose.

The whole system of towers and cables may be so arranged that any line can be gradually transformed into one of greater capacity, without interfering with the electric service, while the change is progressing. In this way the first cost of the lines can be kept low, the lines being constructed of a capacity for the requirements of the present, or of the near future, and gradually brought to their ultimate capacity by reducing the spans (by the erection of intermediate towers) and by increasing the number of suspension cables from two to three, four or five.

The advantage over the conduit system derived from the facility of gradually extending the capacity of the

Digitized by Google

system, without changing the plant already in place, without interrupting the electric service, and without causing any interference with the streets or with traffic (except what would be caused by the erection of intermediate towers, requiring a hole 6 to 10 feet square at each of the four curb intersections) must be apparent. Conduit systems require frequent disturbance of streets and interference with traffic, unless at the start they be made large enough for their ultimate capacity, which is impracticable on account of cost.

TRUCKS.

To enable the linemen to place and repair the wires and cables, and to make connections with houses, it is intended to use trucks with four wheels, supporting a light platform. They are to be placed on the two upper horizontal suspension cables, and the latter are to act as rails, on which the truck runs. The wheels of the trucks are broad, and have very wide flanges, to prevent the trucks running off the track. The wheels are provided with rubber tires, to prevent injury to cables. One truck of this kind is to be provided for every span, and, in some cases, two. The cars, when not used, are fastened to the towers. They may be moved by the workmen to any point of the span, either in the ordinary way by use of an endless rope or in the following manner: a steel wire, of say three-eighths of an inch diameter, is stretched at the same distance above the two upper parallel suspension cables as the groove in the two rollers attached to a frame placed at one or both ends of the platform of the truck. These rollers carry cog wheels on their axles, so that when one is revolved by means of the crank, they rotate in opposite directions. The frame carries on its top, a screw, by means of which the distance between the rollers may be adjusted. A spring is interposed between the end of the screw and the block (moving between guides) to which the axle of the upper roller is attached. By giving the screw a turn to the right, the two rollers are made to take hold of the steel wire, with any desired force; and if the truck is to be moved from the towers towards the lowest point of the catenary, the speed of the descent may be regulated either by use of this screw, or by the crank. To ascend towards the towers, the pressure on the wire is, by means of the screw, brought to such a point that sliding of the wire through the grooves is prevented, and then by turning the crank, the car is made to travel up the incline. The car may be held in position at any point of the span, by stopping the motion of the crank, and increasing the pressure on the wire.

The platform being only a few inches above the devices for attaching the cables and wires to the crossbeams, a

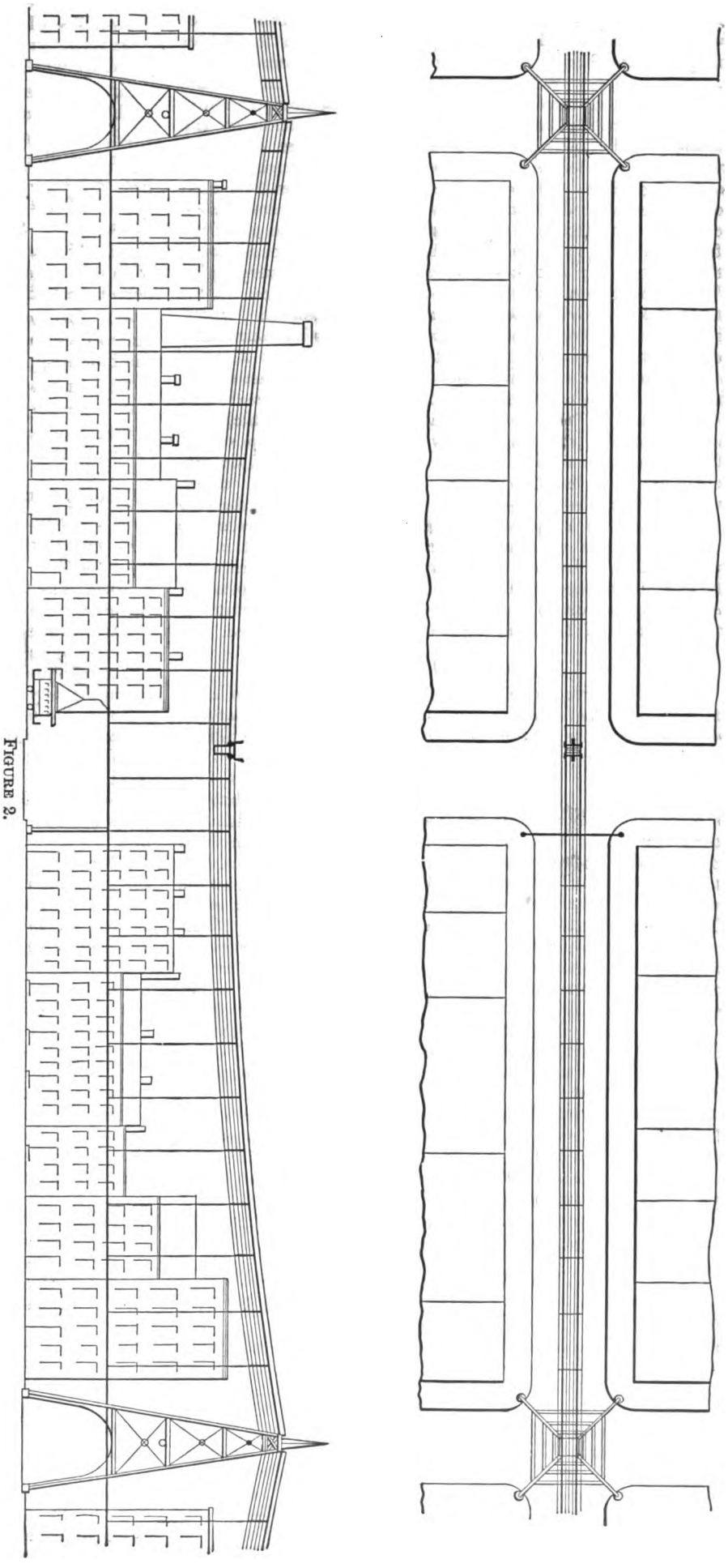

FIGURE 2.

Digitized by Google

workman sitting or lying on the platform of the car can inspect or repair them or make the attachments to houses with ease and speed. In laying cables or wires the latter may be placed on a reel and the work may proceed almost automatically. When the wire reaches the towers the reel is carried across the tower on a platform provided for that purpose and placed in its proper position on the truck of the next span. Even two or more cables or wires might thus be laid at one trip, saving much in cost of laying wires. The car as herein described will be used on lines composed of only the two parallel upper suspension cables. For auxiliary lines two trucks must be provided for each span, as a truck in this case cannot pass across the main line; but these trucks can be made very light. When the line consists of three or five suspension cables the truck is provided with a platform on each side, which is suspended from the axles of the wheels by four links, and at such elevation that both platforms are at a slight elevation above the third central cable. Workmen standing on these suspended platforms can easily reach and handle any of the electric cables and wires which are carried on the iron frame, or where lines are composed of five suspension cables, also those cables deposited on the cross bars of the two lower parallel suspension cables, while the cables and wires on the cross bars of the two upper parallel suspension cables are reached from the upper platform of the truck as before. When it is expected that a line of two suspension cables will in time have to be changed into a line of three or five suspension cables the truck is constructed with a view of admitting the addition of the hanging platforms when required.

COST OF PLANT.

This, of course, depends on the extent and kind of electric service required, on the plan and topography of the city in which the system is to be introduced, on the height of its buildings, on the greater or less compactness of its improvements. To obtain some idea on this point, Col. Flad assumes the system introduced in a city having streets 60 feet wide and 300 feet apart, and comprising a territory about two miles long and one and one-third miles wide, giving a total area of about 1,500 acres, and that the number of houses to be supplied with telephone wires is 10 to every 360 feet of streets, or 150 per mile. The total length of streets being over 80 miles. This gives 12,000 houses to be supplied with telephone service, all to be connected with one central station. He further assumes that an electric arc light be installed at every second street intersection and supplied with electricity from the same central station as the telephone service, and that a certain number of conductors for all other electric purposes, to be supplied from district stations, will be required.

On these suppositions he has calculated the number, height, weight and cost of towers, the cost of cables and trucks, and found that the average cost of plant, if every street is fully provided for, will not be more than $3.00 per linear foot of street.

Col. Flad expects to give the calculations for publication in a later paper.

STREET CAR SERVICE.

The towers and cables of this system may also be used for supporting above ground conductors to supply electricity for electric motors, used in operating street cars. (See figure 2.)

The waste of the electric current will be much smaller under this arrangement of conductors than if the latter are placed in an underground conduit. All danger,—even with currents of high tension, is avoided, and the additional cost of plant, when arranged for street car service, will be but a small percentage of the cost of an underground conduit, which is to accommodate the electric conductor for a single street car line.

Col. Flad claims the following advantages for his system.

1st. The electric conductors are supported at such short distances apart that there is no danger of their being injured by wind or by the accumulation of sleet.

2d. For the same reason they cannot come into contact with each other.

3d. The system allows electric conductors to be placed at proper distances apart from each other so that induction will be small.

4th. There will be less retardation than on underground lines.

5th. If a wire should break it cannot come into contact with any other wire, with a house, or with any vehicle or person traveling on the street.

6th. Every house has its own connection, and no wire has to be carried over any lot of ground not belonging to the house supplied.

7th. In case of the house burning only its own connection is destroyed; all others remain unaffected.

8th. The wires are carried so high up in the air and so far from the houses that they cannot be injured or destroyed by the heat arising from a conflagration of adjoining houses.

9th. Neither the towers nor the suspension cables interfere with the operation of the fire department in placing ladders, &c.

10th. The laying and repairing of cables and wires will be much less costly than at present.

11th. Naked wires can be used to a great extent and the cost of insulation avoided.

12th. The system can be extended without removing or changing any part of the plant.

13th. No interference with, or injury to the wires by malicious or ignorant people is possible.

14th. The towers may be used for carrying rods protecting surrounding property from lightning.

15th. Stand pipes may be erected, in connection with towers, which will protect surrounding property in case of fire.

16th. The towers allow electric lights to be placed at the most effective points and at the proper elevation.

17th. The towers will be ornamental, and the archways, having a clear height of 35 or 40 feet, will not prevent the passage of any vehicle or obstruct the view.

18th. Every tower dispenses with 40 to 50 telegraph poles from one to two feet in diameter.

19th. The four columns of a tower are so located that they do not interrupt the travel on sidewalks, while the present poles greatly obstruct them.

20th. The system allows electric motors to be used for street railroads, without underground conduits.

21st. The additional cost arising from arranging the system for carrying the electric conductor to supply motors on the street railroad will be so small, when compared with the cost of conduits, that the electric motors may be universally introduced and the use of horses dispensed with.

22d. The cost of the plant, under this system, will be so much less than that of underground lines, and the interests to be accommodated by it of such number, that a law enforcing all electric conductors to be placed on the cables would work no hardship to any interest.

23d. The use of this system will leave room under the streets and sidewalks for gas pipes, carrying cheap gas (the fuel of the future), water pipes, &c.

24th. No danger to life or property can occur from conductors carrying high tension electric currents for furnishing light or motive power.

25th. The prices to consumers for electric service of all kinds can be reduced without loss to companies.

26th. The more general use of electric power will be assured by the cheapness of the plant.

Digitized by Google

ELECTRICAL DISTRIBUTION BY ALTERNATING CURRENTS AND TRANSFORMERS.[1]

BY RANKIN KENNEDY.

(Continued from page 188.)

I.—SYSTEMS.—(CONTINUED.)

THE distribution of power by continuous currents of electric energy and electric motors requires motors which conform to exactly the same laws of action as far as their counter E. M. F. is concerned as alternating current transformers, in fact, an electric motor is simply a transformer, and its actions, government and regulation, are similar in every respect to those of a well designed induction coil transformer.

A system of distribution in parallel connection with constant E. M. F. supply demands a motor which shall have a counter E. M. F. very nearly equal to the E. M. F. in the supply conductors when no load is on the motor, and this counter E. M. F. should fall directly as the load is thrown on, and if this fall of counter E. M. F. is proportional to the load thrown on and sufficiently great, then the motor becomes self-regulating, always supposing this action to take place at a constant speed of rotation of the armature.

It is easy to calculate the required fall in counter E. M. F. to meet any given load thrown on to the motor with any given E. M. F. of supply. On the other hand, motors to be run in series order in the circuit of a constant current supply should be so constructed, that when no load is on the motor there should then be no counter E. M. F., or at least an amount of counter E. M. F. too small to be taken into account in the motor, and this counter E. M. F. should increase directly and proportionally as the load is thrown on the motor.

Motors constructed to satisfy these conditions even approximately would solve the problem of the distribution of small powers by electricity. I know not whether the method of winding motors with demagnetizing regulating coils brings about this rise and fall of counter E. M. F. in motors, but I think that is the intention of winding them in such a manner.

I make these remarks here on the transformation of electric energy into power, or work, for the purpose of drawing attention to the similarity existing in the problems of transforming electric energy. The control of the counter forces is the only important point to attend to in constructing electric motors for transforming and distributing electric energy for motive power purposes; and this very point having been neglected may explain why not a single installation of electric motors driven from a common supply yet exists anywhere in this country.

To return to our subject, I may point out an error which some writers have fallen into when speaking of working alternating current transformers in series order. They say "a high tension current of small quantity passes through the whole system and this high tension current is transformed at the points requiring the lights into a current of low tension and larger volume;" now such language cannot be used in relation to a series system of distribution. In a series system the high tension exists only at the generator; at the terminals of the transformers the potential may be anything less than the potential at the generators; that depends entirely on the work being done in the secondary circuit.

In speaking of the series system we should remember that transformers working at constant current supply are designed, or rather ought to be designed to transform a constant current into a current which may be less in volume or greater in volume than the original current; they are then current transformers.

In speaking of the parallel system we should remember that in this system the potential at the terminals of the transformers is constant and high, and this constant high potential is transformed into a constant low potential in the secondary circuit; transformers in this system should be called electromotive force or potential transformers.

We want a current transformer for the series system, and a potential transformer for the parallel system.

As an illustration of this error in speaking of these systems of distribution, I may refer to page 185 of Gordon's work on electric lighting, where it is stated in connection with a series system of distribution, that the current is conveyed as a small current at high pressure, and an induction coil is placed in each house to transform this high pressure current into a current of more quantity and less pressure. Now, any system of distribution is not worth considering unless a large number of consumers can be supplied from one circuit, and supposing a pressure of 2,500 volts to be maintained at the generator as a maximum pressure, we should require about 40 amperes of a constant current in the mains *and also in the primary circuits of all the transformers* to distribute a little over 12,000 incandescent lamps.

Would 40 amperes be a small current capable of being carried without loss through a long thin wire? No. Again, it is obvious that a good many houses would do with less than 40 amperes, and in these cases a transformer there would have to generate a secondary current of *greater pressure and less quantity* than that in the primary circuit of the transformers; the word *pressure* should not appear at all in connection with transformers in series. The sentence in this book describing the system should read, "An alternating current of *constant* quantity is sent into the primary and induces in the secondary a current of more or less quantity to meet the demand according to number of lamps in use." Even the pressure at the generator would not be always *high;* the pressure there would be extremely low sometimes, say during the day when only about 50 lamps might be in use in the system.

Then, again, it is stated that the primary wire is a thin wire and the secondary a thick wire; in transformers in such a system that is also a mistake. Whether you use the thick wire for the secondary and the thin for the primary, or *vice versa*, depends altogether on whether you want a greater or a less current in the secondary than the fixed constant current in the primary. If the fixed constant current was 40 amperes and only 10 amperes wanted for use, it would be absurd to make the secondary wire carrying the 10 amperes thicker than the primary wire carrying 40 amperes; and further, given a good constant current transformer, it would be quite possible to light a large area with transformers in series, every one of which would have a thicker wire and a greater current in the primary circuit than in the secondary circuit.

A current transformer has yet to be invented, but fortunately for electrical distribution, all induction coils, converters, secondary generators, transformers or transformators, by whatever name they may be called, are potential transformers from the first one made by Faraday, 50 years ago, down to the latest development; they are all naturally applicable for working in parallel connection and for transforming high potentials or low potentials, but this fact lay ignored or unknown until 1883, when I published my discovery of it in these columns.

Since then even the most enthusiastic of the promoters of the so-called series systems have quietly adopted the parallel system after meeting with the inevitable failure which awaits every attempt to apply the induction coil as a current transformer.

The series system is now abandoned, and we find Gaulard and Gibbs working the parallel system in the United States and in France, Zipernowski and Deri working the same system in Milan and Rome, and Ferranti working the same system in London.

Zipernowski and Deri's patent comes first after 1883, and is dated 16th March, 1885, No. 3,379. Figure 1 is taken from this, and illustrates the parallel system; here we have a

1. From the *Electrical Review* (London).

Digitized by Google

system of mains at high potential, M, N, and at I., II., III., we have systems of low tension mains supplied through transformers; at C, in plan III., we have a regulating transformer in series with the low potential circuit.

In this specification is described a very effective and ingenious method of regulation, whereby the electromotive force at the terminals of the dynamo-electric generators is maintained constant; this is done by using a transformer with its fine wire circuit in series connection with the main wires, M, N.

The current in the secondary circuit of this transformer is of low tension and large volume, and it varies in volume directly in proportion as the high tension current in the mains varies; this low tension current is made to flow round the field magnets of the generator in one direction by means of a commutator, and hence an increase of current in the main conductors is accompanied by an increase of strength in the magnetic field of the generator.

The next patent is Ferranti's, dated 11th December, 1885, No. 15,251, and to show what can be put into a British patent and give an idea of the contents of the specification, I give the whole claims here complete.

1. The improved means for distributing electric energy consisting in providing high tension mains and low tension mains, and causing each low tension main to be fed from the high tension main through two or more converters which are connected and disconnected as required.

2. The combination of electric circuits and apparatus substantially as described in respect to figure 1 of the annexed drawings.

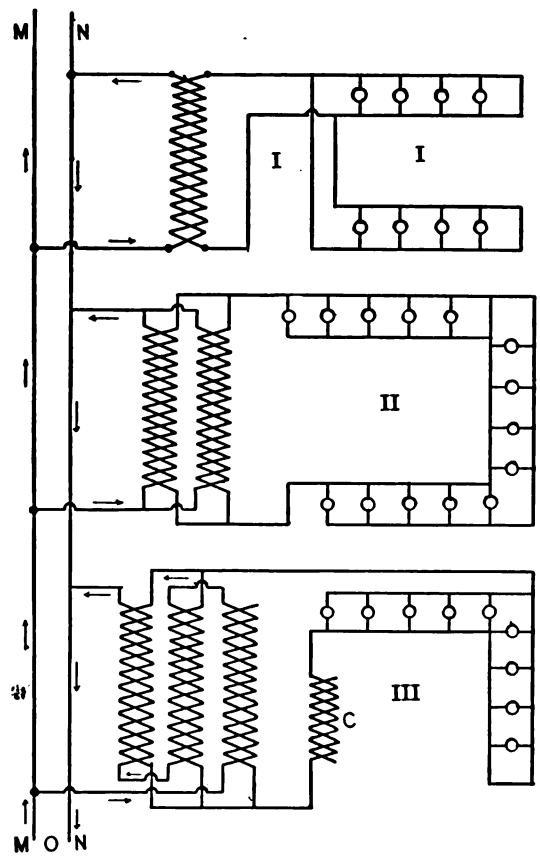

FIGURE 1.

3. An electric main consisting of two metallic tubes drawn one over the other with insulating material between forming part of the same circuit and maintained at a suitable difference of electric potential.

4. The method substantially as described for forming joints in electric mains.

5. The combination with a system consisting of a high pressure circuit, feeding low pressure circuits by the aid of electric converters connected by branches with the high pressure circuit; of fuses or automatic cut-out apparatus in the said branches operating to open the branch circuit when short circuiting occurs.

6. The combination of a high tension circuit, converter, low pressure circuit and fuse in the high tension circuit, substantially as described.

7. The application of fuses in combination with high and low tension circuits and converters substantially as described in respect to figures 6, 7, 8 and 9.

8. The combination of the dynamo a, producing alternating currents, the electric mains a^1 a^2; the two electrometers u u, and the earth connection v; the whole forming an arrangement in which an accurate indication of any leakage in the mains is obtained.

9. The combination of a dynamo producing alternating currents, a converter connected with the primary of the

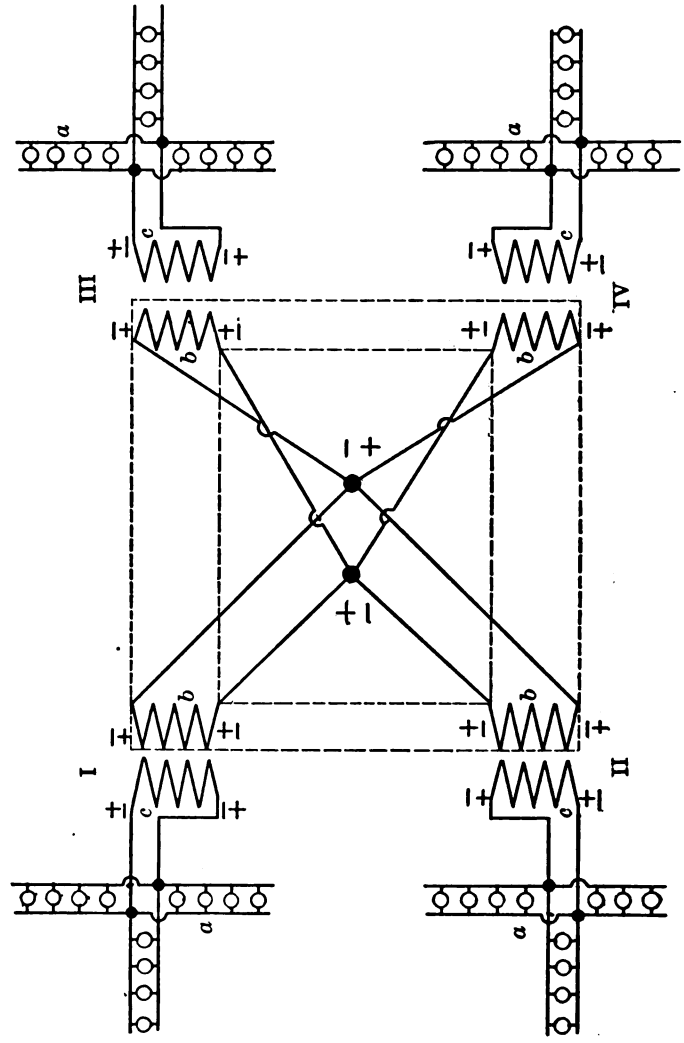

FIGURE 2.

dynamo, a wire in the secondary circuit of the converter expanding and contracting with the variations of the current therein and operating to correct any variation from the normal condition substantially as described.

10. My improvements substantially as described in the means for distributing electric energy.

The eighth claim is for a useful application of two electrometers to detect leakage in the mains.

The ninth claim is for a system of regulation by means of a converter placed in series order in the main wires as is done by Zipernowski and Deri, with this difference, that the low tension current is passed through a Sir William Thomson's regulator, a wire which expands or contracts as the current varies, and this expansion or contraction operates regulating apparatus—may for instance govern the engine which drives the dynamos.

Digitized by Google

Claims 1 and 2 may be compared with Zipernowski's prior specification; claims 3, 4, 5, 6 and 7 are interesting, as appearing in a patent for the distribution of electric energy.

The next patent follows Ferranti's 19 days later, and is by Messrs. Siemens and Halske, dated December 30th, 1885, No. 16,038. This specification shows no knowledge of the self-regulating effects of the counter electromotive forces in the generators themselves. The patent is purely for a system of laying mains and feeders from a central supply station and has some value as such, although for wide distribution it is hard to see how to apply this system. Figure 2 shows the system.

In the specification of Edwards and Normandy, 1878, a proposal is made to employ a converter for raising the potential of the dynamo-electric current, and from this converter to supply the other converters in the system; the same idea is thrown out by Ferranti in the specification hereinbefore referred to. Neither of these proposals have been put into practice, in fact no plan or method of carrying out the idea is described or claimed in either specification.

In 1886, I, with another, took this system in hand, and after a searching examination and practical testing adopted the arrangement illustrated in figure 3, which supplies electric energy from two large transformers to a three wire system; we may add another transformer and have four wires, and thus form a network of supply wires. The large transformers are preferably of a new type, which shall be explained under the head of "transformers;" they raise the pressure from 50 volts to 2,000 volts or 1,000 volts with a loss of less than two per cent., and they are fed from one or more dynamos.

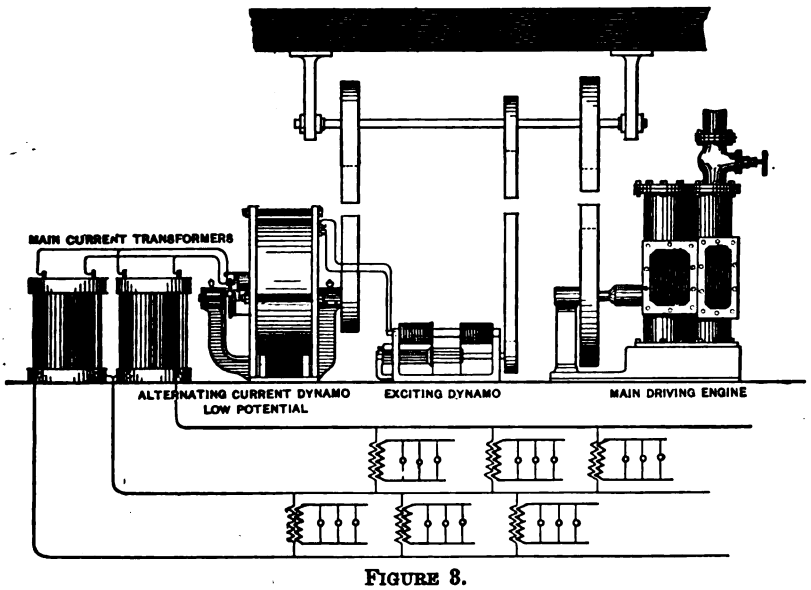

FIGURE 3.

It may be thought at first sight that the use of transformers to raise the pressure is somewhat like the fifth wheel to a cart, but we have reason to believe that there is more loss and less reliability in high pressure alternating current generators than there is in a combination of a converter with a low pressure alternating current dynamo-electric generator.

This completes the list of published specifications in Britain. In America the subject is just now attracting considerable attention; Gaulard and Gibbs having obtained a patent there for parallel connection. The current year will no doubt bring forward further developments, and by the end of it no doubt the parallel system will be in full swing on a large scale in this country as well as abroad.

TRANSFORMERS.

A system employing continuous currents in the main conductors at constant E. M. F. has often been proposed, notably by T. A. Edison, in 1883. In this system the primary currents in the transformers are rendered alternating by a rotating commutator. Enquiries have been made during the last year in every likely quarter, and numerous experiments have been made, but no information can be obtained as to how we are to construct the very pith and marrow of this system, namely, the commutator, which is

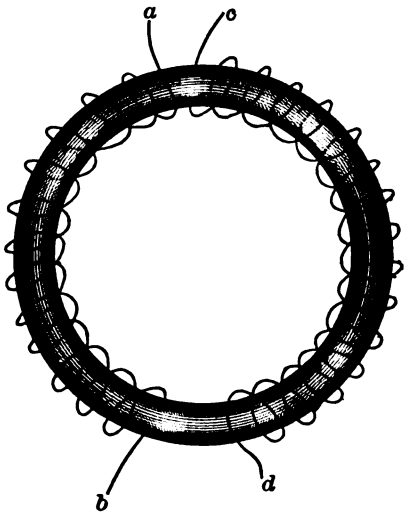

FIGURE 4.—FARADAY, 1835.

to reverse currents of 5 or 10 amperes at the rate of 120 reversals per second with a pressure of 1,500 or 2,000 volts. This patent is no doubt of great value as a patent, but

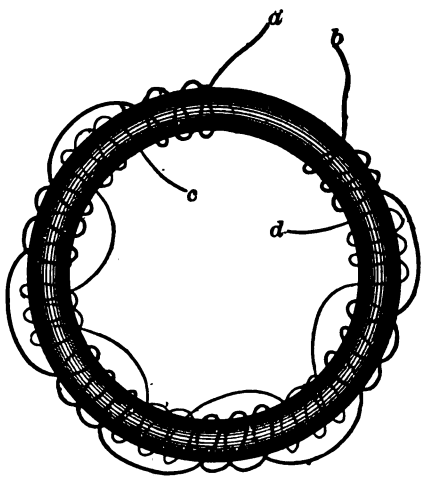

FIGURE 5.—KENNEDY, 1883.

somebody has yet to invent that commutator, and after that the inventor of it would be called up as an infringer if he put it into practice.

A far better system of generating alternating currents from a continuous current was invented by Mr. Henley many years ago; the instrument is described in Noad's Electricity, by W. H. Preece, page 358. If the commutator difficulty were overcome this machine, with a slight modification, would work well in a continuous current system.

We shall now see what has been the history of the transformers themselves; they have been developed by a true process of evolution from the original transformer of Faraday shown at figure 4. In this transformer we have all the elements of the best type of transformer; first, an iron core, which forms a magnetic circuit completely closed or formed of iron throughout; second, a primary conductor, A, B; third, a secondary, C, D.

In 1842 Rhumkorff's coil, figure 9, was invented; in this transformer we have an iron core forming a straight bar, and the magnetic circuit is completed through the air; we

Digitized by Google

have also the two conductors, A, B, and C, D. This form has received great attention during the last 40 years, and was employed by the earlier inventors in distribution systems up to 1883, notably by Jablochkoff and Gaulard and Gibbs. Like the series system with which it was connected, it has now been abandoned in favor of the transformer invented before it by Faraday, namely, the transformer with a magnetic circuit entirely of iron.

In transformers as in dynamos, it has been found neces-

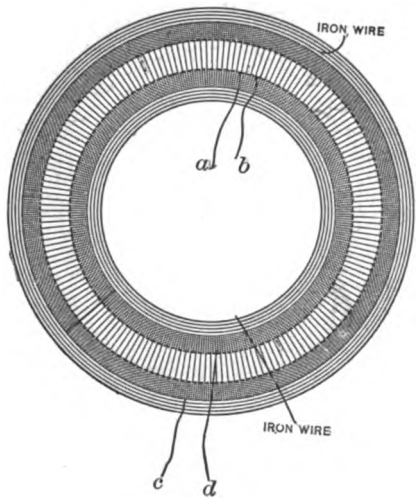

FIGURE 6.—FERRANTI, 1885.

sary to reduce the resistance of the magnetic circuit to the smallest possible value ; this is done in three ways—making the circuit entirely of iron, reducing the circuit in length as much as possible, and increasing its cross-section.

In 1883, I employed a Gramme ring as a transformer, figure 5, and found the advantages of the closed magnetic circuit very great. This transformer is practically the

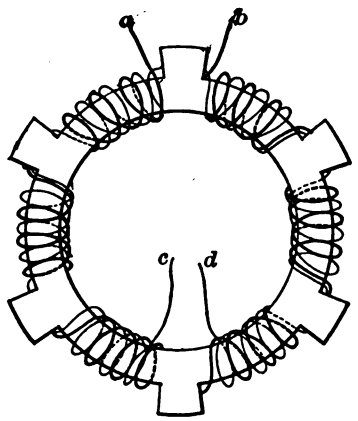

FIGURE 7.—STANLEY, 1886.

same as Faraday's with the improvements in the core ; in Faraday's transformer it is of solid iron, in mine the core is of fine iron wire.

Following me in 1885, Zipernowski and Deri patented the ring which I had used in 1883 ; lately, however, they have disclaimed this patent.

Ferranti improved the ring, figure 6, by winding an iron wire or strip on the peripheries, thereby somewhat reducing the magnetic resistance.

Stanley made a transformer of the Paccinotti ring, figure 7, but it is no improvement, as may be readily seen ; the projecting teeth have some reason for existence in an armature for a dynamo, but I can see no reason for them here and none is given by the inventor.

Dick and Kennedy make a transformer of a Paccinotti ring, figure 8, and give the teeth a very important function to perform, by winding a sheathing of iron wire on the outer periphery. The teeth with this magnetic sheath form short magnetic circuits for each pair of coils as shown at E.

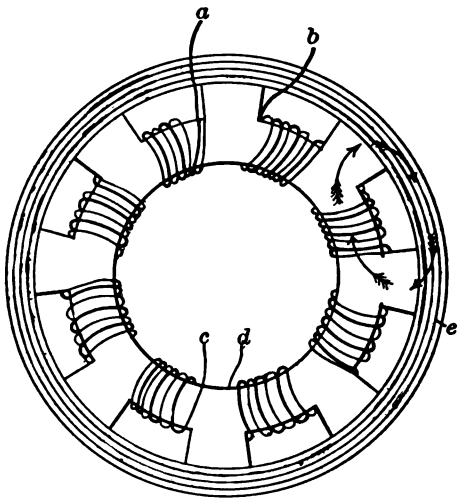

FIGURE 8.—DICK AND KENNEDY, 1886.

This evolution is very interesting, and forcibly illustrates how far important practical results depend on apparently trifling improvements ; thus we have Faraday with a solid

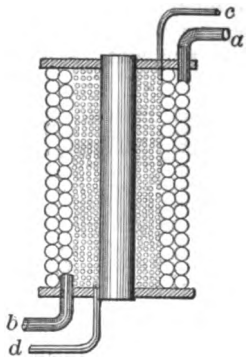

FIGURE 9.

iron cored ring, then follows the ring with fine iron wire core, then with an outer and inner iron sheath, then with teeth without a sheath, then with teeth with a sheath added and wound in magnetic contact with them.

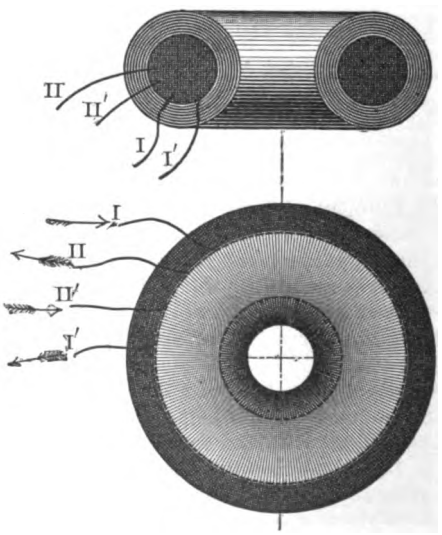

FIGURE 10.

The addition of the sheathing in the Ferranti ring reduces the magnetic resistance in the ratio of about 2 to 1; the sheathing in the Dick and Kennedy ring reduces the magnetic resistance in the ratio of about 6 to 1, and this

Digitized by Google

reduction could be carried further. These are all the developments of the simple ring form ; the improvements are altogether in the magnetic organ of the transformer.

In the 1885 patent of Zipernowski and Deri, we have the most novel development of the ring, producing the highest class of transformer and reducing the magnetic resistance to a very small value ; this invention consists in forming the two conductors into a core of ring form, and then overwinding them with iron wire ; in fact, it is the transformer of Faraday's turned inside out, instead of the conductors enclosing the iron, the iron encloses the conductors.

Figure 10 shows this construction, the ends of the conductors I, I′, and II, II′, coming out through the sheath of iron wire.

FIGURE 11.

The sheathed forms of transformers have one practical objection, and that is, when a fault occurs in the insulation or in the conductors, the whole of the winding has to be undone to make a repair ; this has been overcome in later transformers.

The Zipernowski and Deri ring transformers, consisting of an inner core of two insulated conductors, one of which forms the primary circuit and the other the secondary circuit of the transformer, with an outer sheathing of iron wire forming the magnetic circuit of the transformer, is shown in the finished form ready for use, figure 11. The terminals at the bottom are the secondary ; the terminals at the top are the primary ; the four terminals at the top are for the purpose of conveniently inserting two fuses in the primary circuit to protect the fine wire

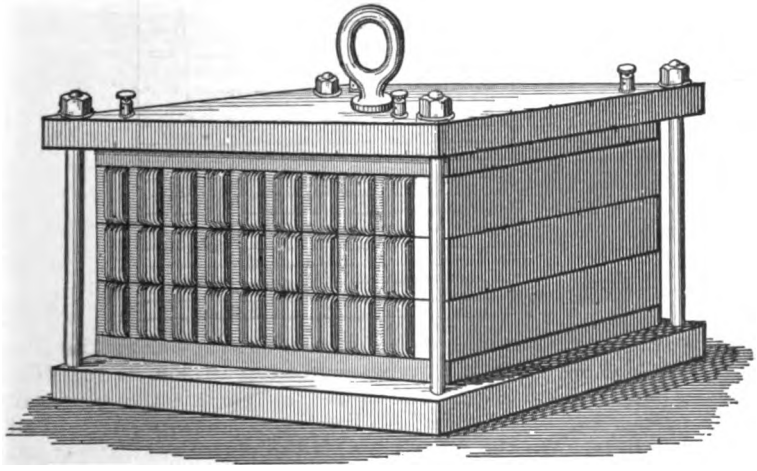

FIGURE 12.

from accidents, such as short circuits in the secondary circuit. This form of transformer leaves nothing to be desired in the matter of simplicity and efficiency, but a slight fault in the circuits inside cannot be rectified without the complete undoing of the whole affair. The magnetic circuit has an extremely low magnetic resistance, being short and of great cross-section ; therefore, self-regulation is perfect, and the heating of the iron arising from the rapid reversals of its magnetism is dissipated from the large outer surface exposed.

In figure 12, I have shown a Dick and Kennedy transformer of the subdivided type in its complete form. In this transformer the magnetic circuit is of the lowest possible resistance giving perfect self-regulation. The core, *g*, *g*, is formed of laminated iron having spaces cut out, as shown at figure 13. Into these spaces are wound the primary and secondary wires, so that each forms a

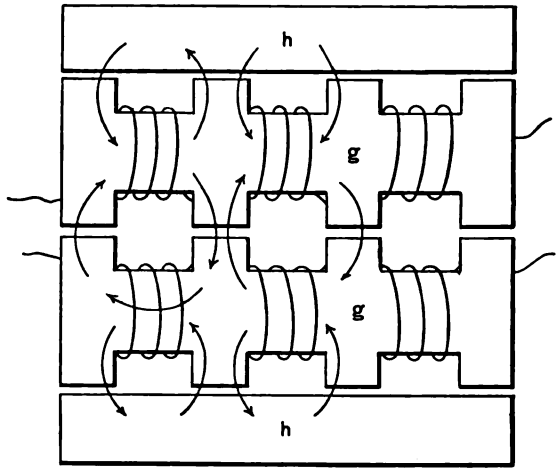

FIGURE 13.

complete little transformer, having its own short magnetic circuit independent of the others. A number of cores containing any number of transformers may be piled one on the other, the bottom of the pile commencing with a laminated plate, *h*, ending with another laminated plate on top ; a fault occurring in any of the little transformers does not entail the undoing of the whole, in fact, a fault in one of them may be cut out while working, by short circuiting it across or cutting it out of the circuit altogether.

The arrows in figure 13 indicate the short path of the magnetic currents. It will be seen that this transformer is a further development of the Pacinotti ring, and it is now necessary to point out this departure in making

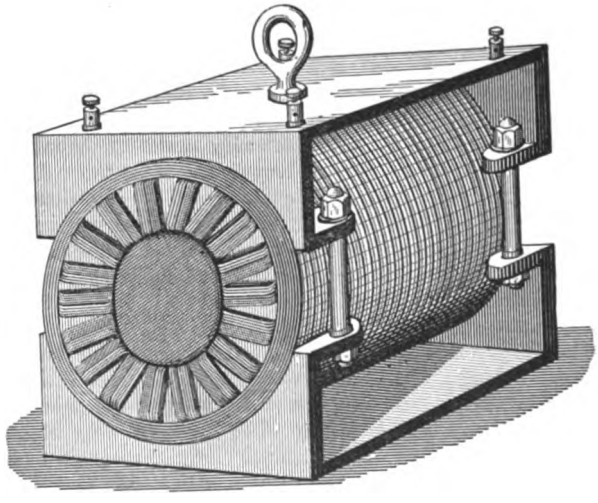

FIGURE 14.

transformers as commencing a new type. We have first Faraday's transformer, a plain iron ring enclosed by two conductors, then in my ring transformer of 1883 we have the same things, with wires or conductors subdivided into

Digitized by Google

many sections, all having a common core or magnetic circuit. In the Ferranti we have the same things again with the additional outer and inner magnetic sheathing, but still the magnetic circuits are common to all the coils or sections of the primary and secondary.

In the Pacinotti ring, with the sheath of iron wire as made by me, we have an iron core carrying the two conductors in sections; but each section has its own independent magnetic circuit. Figure 14 shows a complete transformer on this plan.

In figure 12 this new type of transformer is more perfectly put into practice, and there are other methods than this of carrying it into practice, so that we may conveniently call this type the subdivided transformer to distinguish it from those types having a magnetic circuit common to the whole of the two circuits of the conductors.

The chief advantage of the subdivision of the magnetic circuit is that it obviates the use of long magnetic circuits, and also the magnetic lines of force in the circuits are of very low density, being that due to the conductors enclosed by it only.

The ideal subdivided transformer contains a great number of small magnetic circuits, each enclosing one turn of secondary wire, and 10, 20 or 30 turns of primary wire, as the desired ratio of reduction of potential may require.

Transformers of potential are here classed, according to their magnetic circuits, into three types:

Faraday types. Closed magnetic circuit, common to all the coils or sections.	Faraday, 1835. Kennedy, 1883. Ferranti, 1885. Zipernowski and Deri, 1885. Stanley, 1886.
Rhumkorff types Magnetic circuit closed through air.	Rhumkorff, 1842. Gaulard and Gibbs, 1884. Jablochkoff, 1876. Fuller, 1878. And many others.
Kennedy type, 1886. Magnetic circuit subdivided so that each section has a complete magnetic circuit of its own.	The Pacinotti ring with sheath. The square pile of coils on grooved core (figure 12).

(*To be continued.*)

PRACTICAL NOTES CONCERNING THE CONSTRUCTION, USE AND MANAGEMENT OF STORAGE BATTERIES.[1]

BY A. RECKENZAUN.

(Continued from page 178.)

SINCE the specific gravity of the acid rises and falls in proportion to the amount of charge put into the cell or withdrawn therefrom, it is evident that the hydrometer may not only serve as a continuous charge and discharge indicator, but this simple instrument can, by means of certain attachments, automatically make or break the circuit at any desired point during the charge or discharge. Mr. J. S. Sellon had, in 1884, devised an apparatus which consisted of an hydrometer floating freely in the electrolyte of a cell, and which had a silk thread attached to its upper end; the silk thread was passed over a grooved pulley, and had a weight suspended on its end; the action of this arrangement is similar to that of a wheel barometer. Other inventors have constructed instruments based upon this principle; such indicators seem to work all right in the laboratory, but we do not know of an extensive electric light installation where they may be seen in constant use. There is a difficulty about their application in so far as the space between the plates does not permit of the insertion of an hydrometer, and if the latter is placed at the end or the corner of a cell it does not indicate exactly the specific gravity between the plates where all the action is going on. Unless accumulators are especially constructed to receive an apparatus depending upon the density of the electrolyte, we can only accept the indications as approximate.

The spaces between the plates are, for obvious reasons, very narrow, and it is customary to make the cells little larger than necessary for the reception of the plates; as a rule the distances between the plates are about equal to their thickness, and then, according to the most approved practice, acid of 1,170° should be used when first filling the cell containing thoroughly "formed" plates. By spacing the plates farther apart weaker acid can be used, but the internal resistance will then be slightly higher.

If, at any time, the acid is removed from the cells, for purposes of repairs or inspection, care should be taken in noting the specific gravity so that when replacing the plates the same specific gravity is maintained. If, for instance, fully charged plates are taken out of a cell, and on replacing them new acid of, say, 1,120° is used, then it will be found that on charging up for the first time, the strength

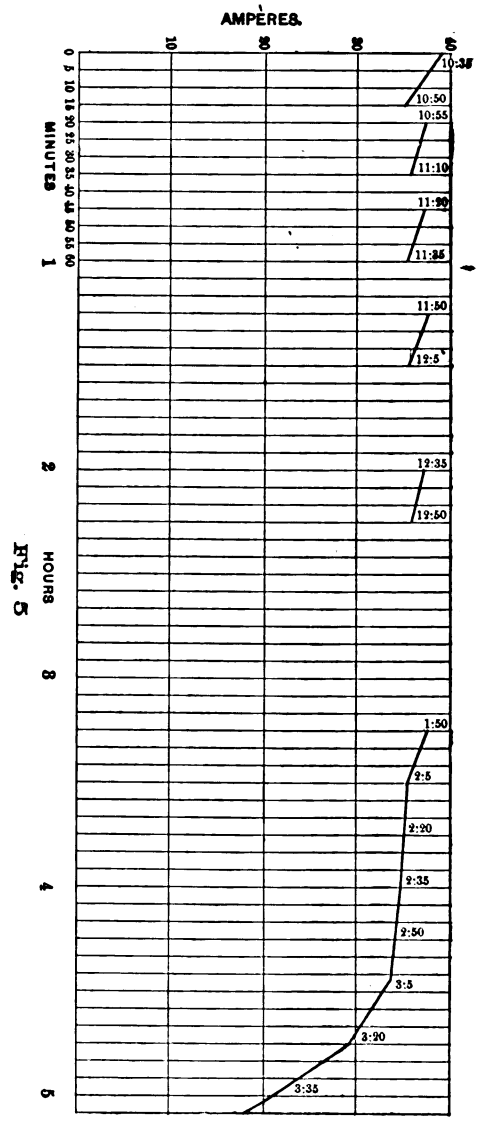

Fig. 5.

of the acid does not rise appreciably, yet during the discharge the specific gravity will drop to something like 1,060° and this would be too weak. The positive plates in this case are thoroughly oxidized, and therefore devoid of sulphate. On the other hand, if the plates are discharged before removal, then they must be put back into the same, or else acid of a strength corresponding to that measured before removal.

"PICKING UP."

We have already stated on page 175 and again on page 177, that by interrupting the process of dis-

1. From the *Electrical Review* (London).

Digitized by Google

charging and allowing the plates to stand idle, the original power is to a great extent restored, and this "picking up" of a cell during repose is closely connected with the formation and removal of a non-conducting film.

To illustrate this we made experiments, the results of which are embodied in table v. and diagram figure 5. The cell under observation was discharged at nearly double its normal working rate. Commencing at 10:35 A. M. we observed a current of 39.4 amperes, it dropped to 36 at the end of the first quarter of an hour, then we allowed the cell a rest for five minutes, when on restarting the ammeter indicated 37.3, and in 15 minutes it fell to 35.9 amperes. Next we gave it a rest for 10 minutes, and on starting the current stood at 37.4, dropping again in 15 minutes to 35.6, a little lower than before. Then we increased the interval of rest to 15 minutes with similar results, and these were scarcely altered when 20 minutes rest was allowed, and this part of the experiment concluded at 12:50 P. M. On resuming the discharge when the clock hands stood at 1:50 P. M., the current was once more at 37.4, it gradually fell without further stoppages, until 3:05 P.M., and between that hour and 3:50 P.M. a rapid decrease took place, so that finally only 16.25 amperes could be got

TABLE V.—INTERMITTENT DISCHARGE.

Time.	Current.	
10 35 A. M.....	39.4	Started.
10 50 "	36	Stopped.
10 55 "	37.3	Started.
11 10 "	35.9	Stopped.
11 20 "	37.4	Started.
11 35 "	35.6	Stopped.
11 50 "	37.5	Started.
12 05 P. M.....	35.6	Stopped.
12 35 "	37.5	Started.
12 50 "	35.4	Stopped.
1 50 "	37.4	Started.
2 05 "	35	Continued.
2 20 "	34.9	"
2 35 "	34.7	"
2 50 "	34	"
3 05 "	33.3	"
3 20 "	29.5	"
3 35 "	21	"
3 50 "	16.25	Stopped.

with a constant external resistance. These results lead us to the conclusion that the "picking up" of an accumulator occurs within a comparatively short space of time, and that there is hardly any difference whether the period of rest is five minutes or one hour. This recuperative power is in many respects of great advantage, especially in the case of propelling tram-cars, which require so much force at starting, and each stoppage supplies the requisite initial effort by virtue of this "picking up" property of the cells.

VOLUME OF ACID RELATIVELY TO VOLUME OF ACTIVE MATERIAL.

If the electrolyte is too weak, or if there is too little of it, then it becomes absorbed by the lead or exhausted at an early stage, when water only is left. The volume of the acid must bear a certain ratio to the volume of active material, and this ratio had to be ascertained by practice. Referring to page 105, we find that the cell (*a*) of 150 ampere-hours capacity contained 23 plates, 11 positives and 12 negatives. The volume of peroxide in the positives was 36.9 cubic inches, and that of spongy lead in the negative plates 30.23 cubic inches, giving a total of 67.13 cubic inches. The displacement of the 23 plates, including their supports, however, was 105 cubic inches. The contents of the box occupied 280 cubic inches when the level of the liquid reached ¼ inch above the top edges of the vertically arranged plates, consequently we had 175 cubic inches left for the acid of 1,170° density. We had thus 2.6 cubic inches of acid for every cubic inch of *active* material, and 1.666 inches of acid for every inch of plate, including supporting frames and terminals. The results obtained in practice with these cells justify us in regarding the above proportions as advantageous.

EFFECTS OF COUNTER E. M. F. OF A MOTOR ON THE RATE OF DISCHARGE.

The results of experiments which we collected in tables i. and ii., and diagrams, figures 1 and 2, have given us comparative values of the effects produced upon the E. M. F. of accumulators when the same were discharged at various rates through different external resistances composed of homogenous conductors.

If, instead of discharging the currents through wires or lamps, we actuate an electro-motor, then the E. M. F. of the battery will vary with the counter electromotive force of the motor, whilst the actual resistance of the external circuit is constant. The current flowing through the motor when its armature is prevented from rotating, will, of course, be $C = \frac{E}{R}$, where E represents the difference of potential at the terminals, and R the resistances of the wires in the machine; but as soon as we allow the armature to spin round the current, C, will decrease, because then the machine begins to work as a dynamo; it will generate a counter electromotive force, *e*, which is, of course, smaller than E; but the faster the armature revolves the nearer will *e* approach the value of E, and as this opposing E. M. F. rises, so the current, which we shall call *c*, diminishes in proportion. The accumulator, therefore, is no longer discharging through the known resistance, R, but against an E. M. F. which has the same final effect, as far as the current rate is concerned, as a resistance of some conducting material inserted between the poles of the battery.

The counter electromotive force we calculate by means of the well-known formula:

$$e = \frac{C - c}{C} \times E_1.$$

To illustrate this phenomenon we have prepared table vi., giving the results of experiments made with a series-wound motor whose coils offered a resistance of .4 of an ohm taken between the terminals immediately after running it. Two E. M. F's., therefore, had to be ascertained, viz., E of the battery with only the volt-meter in circuit, and E_1 of the same when the motor was doing mechanical work at the expense of a current, *c*, measured simultaneously.

TABLE VI.

DISCHARGE THROUGH A SERIES-WOUND MOTOR.

No. of cells in circuit.	Revolutions per minute.	Current *c* in amperes	E on open circuit.	E_1 on closed circuit.	Electrical H.P.	Brake H.P.	$\frac{E_1}{E}$	Counter E.M.F. *e*.
48	1014	31.35	95.5	88.0	3.7	2.8	.921	75.4
"	720	42.9	"	85.7	4.92	3.6	.897	68.5
60	1360	31.4	117.6	107.8	4.6	3.6	.916	89.0
"	950	42.9	"	104.4	6.1	4.6	.896	86.6
70	1200	42.9	139.6	125.0	7.2	5.5	.895	107.7
"	1080	47.8	"	122.5	7.85	6.0	.877	103.4

We commenced with 48 cells, joined in series; these gave 95.5 volts on open circuit; after connection was made with the motor, and the brake loaded to absorb 2.8 h. p. the E. M. F. dropped to 88 volts; the current rate, taken at the same time, was 31.35 amperes. On increasing the load to produce 3.6 h. p. at the motor shaft, 42.9 amperes of current were consumed, when the E. M. F. of the battery fell to 85.7 volts.

Tests were made with 60 and 70 cells in series, and these gave similar results; in all cases when the brake was loaded with weights corresponding to 42.9 amperes, the value of E_1 came to about 89 per cent. of E; and with 31

Digitized by Google

amperes the E. M. F. on closed circuit amounted to over 91 per cent. of that on open circuit.

We see thus that E_1 is a quantity which varies with the load, and, therefore, in making preliminary calculations, the available E. M. F. should not be fixed as two volts, for instance, irrespective of the current rate; indeed, the last experiment, with 47.8 amperes, showed that only 122.5 volts were available out of 139.6 which the battery gave on open circuit. The ratio, $\frac{E_1}{E}$, is tabulated for each test, as also the calculated counter electromotive force of the motor.

EFFECT OF COUNTER E. M. F. OF A BATTERY UPON THE DYNAMO CHARGING IT.

Although a shunt-wound dynamo can only produce a certain maximum E. M. F. at a given speed, yet it will accommodate itself to any counter electromotive force below that maximum. As we increase the number of cells, and with it their counter E. M. F., so the current diminishes until it falls to zero, when, with the least decrease of speed, the accumulator overpowers the dynamo and discharges itself through it, with the result of converting the generator into a motor, running in the same direction. Tests made with a shunt-wound Brush machine proved this conclusively. This dynamo could charge 30 cells at the rate of 22 amperes when making 800 revolutions a minute, but when one extra cell was put in circuit the current dropped to zero, because at this speed the machine could not give more than 68 volts, and the counter E. M. F. of each cell at the time of this experiment was 2.25 volts.

Table vii. refers to this Brush dynamo charging 20, 25 and 30 cells; and table viii. shows the results of similar experiments with a Siemens machine charging 60, 65 and 70 cells.

TABLE VII.

SHUNT-WOUND BRUSH DYNAMO CHARGING ACCUMULATORS.

Number of cells.	Rev's. per min.	Current		E.M.F. at terminals.
		Main.	Shunt.	
20	812	28.56	3.00	48.16
25	812	27.37	3.72	59.34
30	800	22.13	4.18	67.94

TABLE VIII.

SHUNT-WOUND SIEMENS DYNAMO CHARGING ACCUMULATORS.

Number of cells.	Rev's. per min.	Current.		E.M.F. at terimnals.
		Main.	Shunt.	
60	1161	29	2.9	140
65	1185	23.8	3	147.7
70	1175	17.6	3.45	154

RISE OF E. M. F. WHEN CHARGING SECONDARY BATTERIES.

At the commencement of the charge the E. M. F. required is very little more than two volts per cell, but as the operation proceeds this E. M. F. increases, until at last, when gases are given off freely, it may rise to 2.5, and even more per cell, according to the charging *rate*. The dynamo, therefore, will have to be so constructed that if it had to charge 50 cells in series it should be capable of giving 125 volts at the terminals of the battery. Assuming that the speed of the generator is constant, the current will also remain nearly constant, for when at the commencement of the charge the counter E. M. F. of the cells is low, their internal resistance is correspondingly high, consequently these two influences partially counteract each other. We have seen from figure 4, page 177, that the specific gravity of the acid rises and falls in proportion to the amount of current sent through the cells, or withdrawn therefrom, and that the "curves" traced by plotting the hydrometer readings are practically straight lines. The rise of E. M. F., however, does not appear to occur in exact proportion to the amount of charge put into the cells, as will be observed from the curve, figure 6, which was constructed by Messrs. Drake and Gorham to illustrate certain statements in a paper read at the British Association meeting of 1886. This curve shows the rise of E. M. F. during the charge, the current being throughout kept constant at 22 amperes. It will be seen that at the commencement the charging E. M. F. was only 2.02 volts, that after 220 ampere hours had been put in, representing about one-half the capacity of the cell experimented upon, the E. M. F. had risen to 2.13, and that when the cell was giving off gases freely the E. M. F. was as high as 2.53 volts. This curve

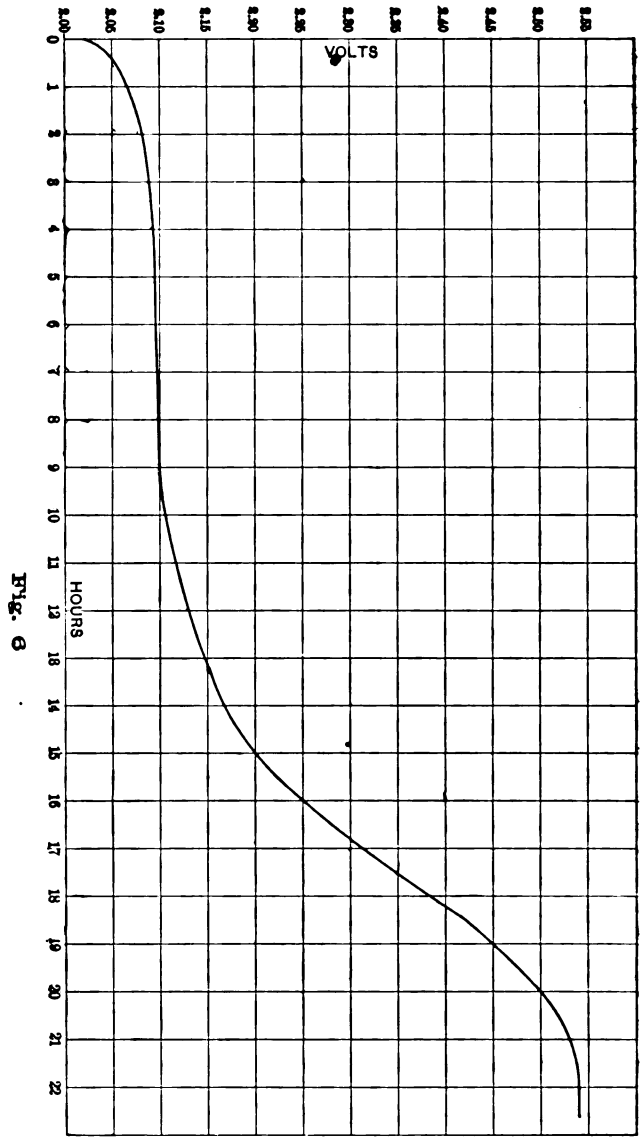

Fig. 6.

does not by any means represent a proportional augmentation of pressure; for in the first hour a rapid rise of E. M. F. takes place, then it goes on gradually until the 13th hour; for the next seven hours the pressure goes up very fast, and during the last hour no perceptible change takes place, indicating that the cell was fully charged with 462 ampere hours. This shows clearly what provision must be made in dynamos for use with secondary batteries when the current is to be kept constant. Sir Thomas S. Bazley suggested in the *Electrical Review* of March 19th, 1886, that the charge of secondary batteries can be tested not only by the hydrometer, but by the alteration (the dynamo speed being constant) of both current and E. M. F. He considered that the gradual rise of E. M. F. during charging

Digitized by Google

is an unfailing indication of increased storage; at any rate, when a certain reading of the voltmeter (determined by previous trials) has been attained, no further efforts of the dynamo can augment it; and it is, therefore, fair to assume that this maximum E. M. F. corresponds to a full charge of the battery. In order to insure that the voltmeter readings really correspond to the amount of charge, it will be necessary to count the number of revolutions of the dynamo each time such readings are taken; this involves more trouble, and it is, perhaps, less accurate even than the hydrometer test.

VARIATION OF E. M. F. WITH GENERATOR RUNNING WHILST THE BATTERY IS DISCHARGING.

We have seen, from the results tabulated on page 264, that within certain limits the E. M. F. of a shunt-wound dynamo will adjust itself to the counter electromotive force of the cells which it charges, and as this counter E. M. F. is increased, the speed being constant, so the current rate was diminished, and *vice versa*. We have also observed from experiments collected in tables i. and ii. that the E. M. F. of a battery varies with the rate of discharge.

Secondary batteries can only be charged, safely and conveniently, by means of dynamos having a constant magnetic field, such as shunt machines, magneto machines, or dynamos whose field magnet coils are separately excited. But such dynamo machines do not give a constant E. M. F. when the external resistance, or, what comes to the same thing, the current rate is varied within wide limits. In the case of electric lighting installations the accumulator is coupled in parallel with the dynamo, and it frequently occurs that the latter is kept running whilst the cells supply current to the lamps; one, in fact, supplements the other. Now, so long as the number of lamps in use is constant, the E. M. F. of the dynamo and with it the cells will be constant, but when more lamps are switched on, demanding a greater current, then the E. M. F. of the dynamo will fall in proportion to the slightly diminished counter E. M. F. of the cells. To explain this we take two extreme cases: the dynamo, for instance, is giving 40 amperes; if a current of one ampere were flowing through the lamp circuit, 39 amperes would have to go into the cells, and when 39 amperes are required by the lamps then only one can be utilized by the cells; in the latter case, owing to the diminished resistance of the lamp circuit, the E. M. F. of the generator will fall very considerably unless the resistance of the battery is very much less than that of the lamps and leads.

In practice the battery resistance is always less than one-tenth of that of the lamps, consequently there is a large margin for compensating any irregularity. Mr. Augustus Littleton, in his extensive installation at Sydenham, has made some interesting experiments on this point, also published in the *Review* of May 19th, 1886. There we find that, when the dynamo was running at 600 revolutions per minute in conjunction with the accumulator, the E. M. F. was 117.5 volts with 16 amperes, 110 volts when using 38 amperes, and only 96.5 volts at the moment when a current of 62 amperes was flowing through the lamp circuit. The resistance of the armature is stated to be .119 of an ohm, and this, no doubt, has a great influence upon these fluctuations; if this resistance were less, then a more uniform result could be obtained, but this great variation in the E. M. F. as the current rate is altered, the makers of the dynamo declare, is "the proper condition of things required for charging accumulators when the power is supplied by a gas engine (as in the case of Mr. Littleton's), or by any prime mover where the delivery of power is in the nature of emphasized intermittent pulsations."

Sir David Salomons, whose wide experience in the application of secondary batteries for electric lighting is universally recognized, says "the action of the cells in steadying the light, when the prime motor is irregular in speed, depends on two conditions, one acting when the cells are charging, and the other when the dynamo is running and doing work on the lines, but sending very little or no current into the cells, or when the cells are discharging to line at the same time, which is the case when the E. M. F. of the dynamo and the cells are equal." Sir David calls this latter condition "the balancing point," and he also contends that the steadiness of the light (or E. M. F.) depends on the relation between the resistance of the cells to that of the line, and on the "characteristic" of the dynamo. The less the resistance of the cells and the steeper the "characteristic curve," the steadier will be the light during charging.

SECONDARY BATTERIES AS REGULATORS.

We have already stated that the resistance of the generator has a great influence upon the steadiness of the light when the speed of the prime mover is somewhat irregular. There is, or has been an impression among engineers, that an accumulator, however small, would suffice for the purpose of regulating the flow of current from a dynamo of any dimensions. This would only be true if the E. M. F. of the cells were constant with varying rates of discharge. But we know that the rate of discharge must be proportioned to the capacity of the accumulator, and this capacity, we have explained, depends upon the active surface of the plates. The internal resistance of the cells has, in a measure, some influence upon the regularity of the discharge, but the supply depends mainly upon the rapidity with which the chemical action may take place upon the plates. The volume of active material, as well as its distribution within the cells, determine the rate at which the current can be furnished; therefore, in order that an accumulator may furnish the maximum current that may be demanded from it in an electric light installation, its capacity must be large enough to allow the action to be going on without any diminution of the E. M. F. in the battery.

If the speed of the prime mover could be kept absolutely constant with varying loads, then we could obtain an ideal regulation by means of a dynamo having an infinitely small internal resistance, so that this dynamo, and not the accumulator, can supply all the extra current required by additional lamps. The characteristic curve of such an ideal shunt dynamo would be a straight, horizontal line, since its E. M. F. must be constant, at a given speed, whilst the current may be varied *ad libitum*. Unfortunately, such a dynamo would not suit an accumulator whose counter E. M. F. is 20 per cent. higher at the completion of the charge than at the commencement. The current rate would naturally fluctuate between very wide limits with the least variations of the counter E. M. F. of the cells. Thus with a shunt dynamo having an armature of an infinitely small resistance joined to an accumulator of extremely large capacity, we can obtain in the lamp circuit any amount of current at a constant potential, assuming an absolutely constant speed. An almost imperceptible diminution of speed, however, would lead to disastrous results in so far as the battery whose E. M. F. balanced that of the dynamo so nearly, would then discharge itself through the latter and drive it as a motor which, in its turn will assist the prime mover for a moment, until its velocity rises and overcomes the counter force. A small per cent. variation in speed will render such a method of regulation as defective in practice as it is perfect in theory.

In the other extreme case, again, of a shunt machine whose armature has a very high resistance, the speed may vary considerably without seriously affecting the E. M. F., but as soon as we increase the current through the lamp circuit the dynamo E. M. F. drops, the excess of current demanded has to be supplied by the accumulator alone, with the result of a general lowering of potential throughout the circuit. The characteristic curve of this dynamo approaches a vertical line. Between these extreme cases we may, however, find some happy medium

Digitized by Google

which will give us the key to the solution of a difficult problem. To facilitate description we have constructed characteristic curves of two dynamos with which actual experiments were made. Neither of these approaches the ideals set forth in the preceding argument, yet both are employed in installations which have proved successful. We have drawn the *external characteristics* only with the amperes measured in the external circuit, the volts between the terminals, and both plotted as shown on diagram figure 7. The steeper curve refers to a Siemens S D, dynamo, whose armature resistance was .32 of an ohm, and which ran at 1,380 revolutions per minute. The more horizontal characteristic curve represents the conditions observed by running an Edison (old L type) dynamo at

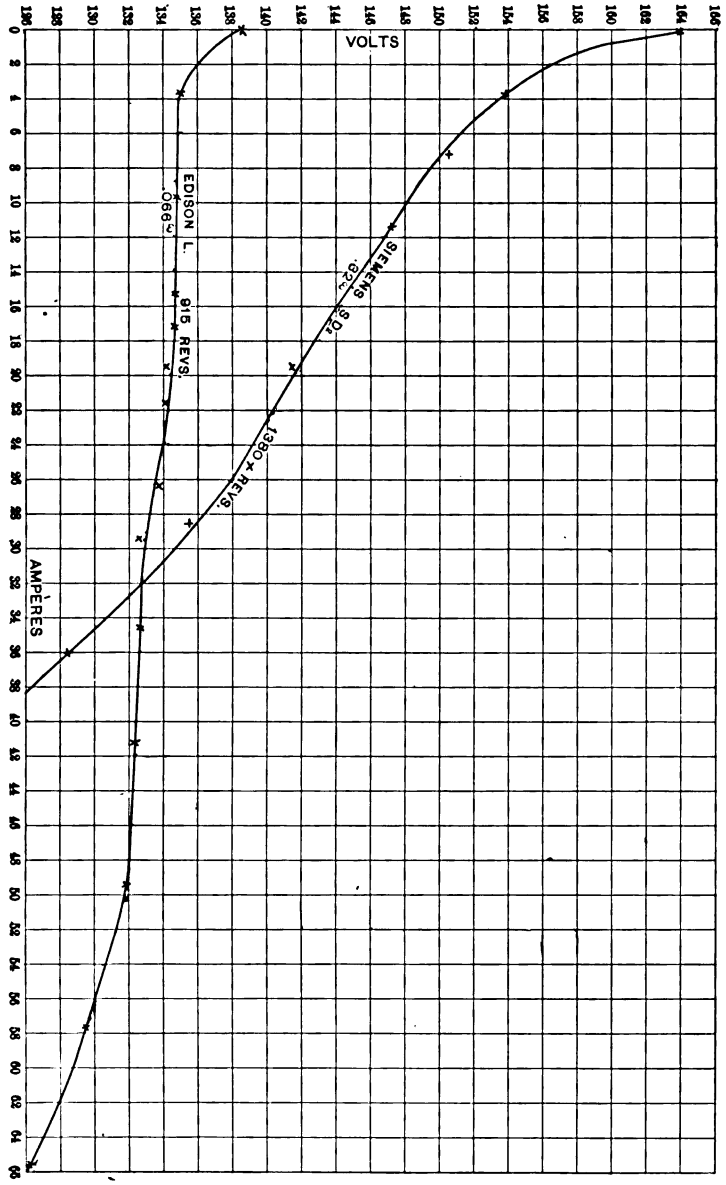

Fig. 7.

915 revolutions; the armature resistance of this, taken between opposite brushes, measured .066 of an ohm. For the purpose of comparison we take the points of similarity in each, using the differences of potential within the limits of 135.3 and 126.1 volts.

To avoid complications we have omitted the *internal characteristics* of these shunt machines, but we may state that the current through the shunt varied from 6.8 to 5.8 in the Siemens, and from 7.5 to 6.8 amperes in the Edison, within the potential extremes of 135.3 and 126.1 volts respectively.

The curves of these widely different dynamos, it will be seen, meet at one point only, where each furnishes a current of 32 amperes with 134.8 volts; from this intersecting point the characteristics diverge above and below at an angle of about 37°. With a difference of potential of 126.1 volts the Siemens dynamo gave 38.3 amperes, and the Edison 65.8 amperes; with 135.3 volts the former furnished a current of 28.3 and the latter 3.5 amperes. The currents, therefore, in the one fluctuated only to the extent of 10 amperes, whilst that of the other differed by 62.3 amperes, within the limits of E. M. F's indicated; and these limits would represent, with a battery of 55 cells in series, a variation of from 2.29 to 2.46 volts per cell; just enough to overcome the counter E. M. F. of the accumulator when partially and fully charged. (*Vide* curve, figure 6, page 264, *ante.*)

No current passed through the external circuits when the E. M. F. of the Siemens dynamo rose to 164 volts and that of the Edison to 138.3 volt, both working at their normal speed.

It is evident that the machine with the steepest characteristic curve will be the most suitable to work in conjunction with an engine having an irregular speed. Supposing we know the lowest number of revolutions the engine would make with a maximum load, we can gear the dynamo accordingly; if, for instance, we wish to charge the accumulator at the rate of 32 amperes with a minimum E. M. F. of 134.8 volts then this Siemens machine must have a minimum speed of 1.380 revolutions per minute. Any augmentation in speed will have the effect of increasing the current in almost the same ratio as the E. M. F. This ratio would be exactly the same if the angle, which the curve makes with the horizontal, were one of 45°.

In the case of the Edison dynamo, the slightest changes of the E. M. F. cause a very great fluctuation of the current rate, consequently with this machine we should have to provide a far more constant engine speed.

The present example of a Siemens dynamo will be found most suitable for an installation where the accumulator can be charged all day and furnishes a large current for a few hours in the evening; whether both are working in conjunction or not, the cells will have to supply the bulk of the current, since the dynamo current is limited. The Edison machine, on the other hand, if used with the same accumulator, will allow of a much greater margin in the current supply provided that there is ample power to be got out of an engine with a constant speed.

Regulation in the one case is effected by means of an accumulator whose capacity is large in comparison with the power of the dynamo, and in the other case the dynamo supplies the excess of current which the accumulator is incapable of supplying without loss of potential. In any case, therefore, the characteristic of the dynamo has to be determined with due reference to the nature of the engine which furnishes the motive power. The generally accepted analogy between an electric accumulator and a hydraulic accumulator, or a gasometer, as the case may be, is only true within certain limits, and we shall endeavor to consider these presently.

(*To be continued.*)

THE ELECTRIC LIGHTING OF PASSENGER TRAINS.[1]

BY GEO. W. BLODGETT.

A BETTER method of lighting passenger trains is demanded by considerations of economy, comfort and safety. Economy is a question which chiefly concerns the railroad

1. Read before the American Institute of Electrical Engineers, June 28, 1887.

Digitized by Google

management, but comfort and safety concern all their patrons. There are two ways in which we may seek these; either by improving the present system or by substituting a better one. It is doubtful whether oil lighting can be much improved and still be reasonable in cost, and whatever danger attends its use would probably still remain. I have made careful inquiry among my railroad friends without finding any instance within their personal knowledge where the ruins of a railroad wreck were set on fire by the lamps in the train (indeed these are usually instantly extinguished), but such an instance was said by one of the survivors to have occurred in the late disaster at Hartford, Vt., and another was mentioned at a recent meeting of the New England Railroad Club, where the explosion of a lamp set a sleeping car on fire, and it burned with nearly all the occupants. It is however certain that a pile of splinters deluged with oil will burn more fiercely and be much more difficult to extinguish, than if in their normal condition.

It is therefore desirable to get rid of oil lamps for the harm they may do in *aiding* the progress of a fire, even if they do not cause one. The discomforts of oil lighting, in point of amount, distribution, unsteadiness and color of the light, corruption of the air, and the great heat given out by a large number of lamps in a car are other reasons why a change would be welcome to both the railroad management and the public, if a reliable substitute can be found. Some of the objections enumerated above apply with equal force to lighting by gas, the others are partially, but not wholly eliminated. *Electricity*, however, offers a means of lighting which comes nearer to meeting all the requirements of a perfect light for passenger cars than any other yet discovered.

There are several ways in which we may produce the electricity for car lighting. It is possible to light a car successfully by any one of them, but further experiment is necessary to determine which is the very best to adopt, and we have already found some much better adapted than others to our American trains. The different methods will be considered in order.

1. By batteries. I know only one experiment successfully going on at present. A train has been running for nearly a year between Paris and Brussels, the cars of which are lighted by electricity from a bichromate battery. It lasts for five trips of seven hours each—that is, 35 hours of lighting—without renewal, which is said to take only five minutes. No accurate estimate of cost, or more detailed information is yet at hand. There are several other batteries in the market which appear well, and if the motion of the train does not have a deleterious effect, would seem possibly adapted to this work. My own experience is conversant with only one trial of this kind which did not succeed. Forty cells of a battery which had worked well in several house installations were put in boxes suspended from the bottom of a car, and 16 (?) lamps of 16 c. p. each, put up in the car. The lamps burned well for one night, but the next night there was the appearance of a sudden and enormous increase of internal resistance in the battery, and it was removed for further experiment before trying to light cars. An attempt was made two or three months ago, to light a N. Y. C. passenger car with batteries of some kind, which also failed as I am told. [Note A.]

2. By a dynamo machine. There are three ways in which this has been done. A small dynamo and engine have been mounted on the boiler or tender, and the latter run by steam from the locomotive boiler. The great objection to this method is that there is no light until the engine is attached to the train, nor if it be temporarily removed. To obviate this difficulty a separate boiler, engine and dynamo have sometimes been carried in the baggage car or on a platform car at the head of the train. It would seem that the danger from fire in this arrangement would be quite as great as by the stoves in the cars. A method tried with some success in a few instances in England and elsewhere abroad (but only once in this country to my knowledge), is to run the dynamo from one of the axles of the train, the proper speed being obtained by suitable countershafting and belts between the axle and the pulley of the dynamo. Since there would be no light when the train is at rest or when the dynamo was running at too low a speed, a battery of accumulators is added, sufficient to keep the lamps lighted for the longest time when the train is standing in the station, or elsewhere. When the train stops, or is at too low a speed for the dynamo to light all the lamps, they are automatically switched to the circuit of the accumulators where they remain till sufficient speed is again attained when they are switched back on the dynamo circuit. During the day when the train is running the dynamo charges the accumulators and keeps them full. They are sufficient to light the train several hours if need be. On one train in Germany, the dynamo and 26 accumulators weighed 1,350 pounds, and cost about $625; operating 12 lamps cost about two cents per hour, or one-sixth of a cent per lamp per hour. The London, Brighton & South Coast Railway Co. fitted up four trains in this way. In one train of 11 cars there are thirty-two 16 c. p. lamps, absorbing 40 amperes of current. The accumulators are stated to hold 500 amperes (probably 500 ampere-hours is meant), and when fully charged are stated to be sufficient to maintain the lamps for eight hours. This train has been running since December 19, 1883; during the first 11 months it made 2,352 trips, and ran 27,322 miles. No failures are reported. A train on the South Eastern Railway has even run a longer distance. The dynamos on these trains have an E. M. F. of 45 volts and give 56 amperes of current. Two pairs of brushes are mounted on a rocking frame so contrived, that when the train runs in one direction, by means of a lever loosely connected with the dynamo axle, and varied in position by attraction of the pole pieces of the field magnets, it tilts the frame in the direction to bring one pair of brushes in contact with the commutator. If the train runs in the opposite direction, the other pair of brushes are brought to bear on the commutator. A vessel containing mercury has revolving within it a coarse threaded screw driven by a belt from the dynamo-axle. At each end of the vessel is a vertical tube, at the upper end of which is an adjustable contact screw. When the dynamo and, consequently, the screw revolves in one direction, the mercury rises in one tube. If the motion is reversed, it rises in the other tube, and when it makes contact with the adjustable screw, the shunt circuit of the dynamo is joined up, the field magnets are charged, the lever is drawn up and one pair of brushes brought to bear on the commutator, which completes the circuit for charging the accumulators. When the lamps are lighted and the train is in motion the dynamo feeds them, the accumulators merely acting as a regulator. If more current is being generated than the lamps require, it goes to the accumulators. If less, the balance is given out by them. When the speed of the train slackens, the fall of mercury in one of the tubes, breaks contact with the adjustable screw, the field magnet circuit is broken and the brushes are removed from the commutator, the lamps continuing lighted by means of the current from the accumulators.

The apparatus can be used for several weeks with no attention beyond lubrication, and at the end of this period only a re-adjustment of the commutator brushes is necessary, which puts the machine in condition for a like longer period. The weight of the apparatus is about two tons.

The connections between the cars are made by coupling

NOTE A.—Most batteries furnish a continuous current for so short a time without renewal, that their use is debarred on this account. Some others will not bear the shaking up produced by the motion of the train. I have myself experimented for a considerable time, but thus far without finding a battery which will run on a closed circuit longer than two or three weeks, and at the same time can be carried on a train. When such a one can be found, which at the same time gives a current strong enough to light a series of lamps, it will have a great field of usefulness.

Digitized by Google

two cables together. A slightly different arrangement of circuits has the field magnets of the dynamo wound with two wires in opposite directions, one of which is in shunt to the armature, as if the dynamo were an ordinary shunt machine. The other is wound in the reverse direction as if the dynamo were a compound machine, and the accumulators are in series with this wire. The lamps are also in shunt with the armature.

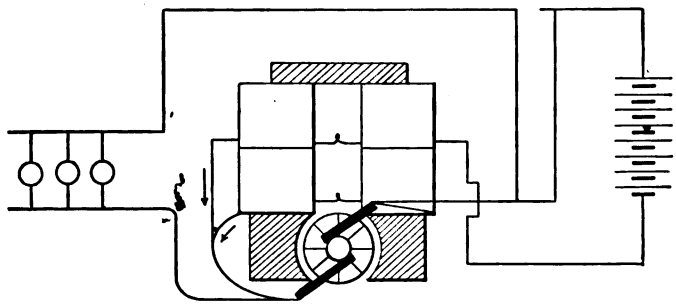

There is a cut-out to break the circuit of the armature when the dynamo runs below a certain speed ; this prevents the cells discharging themselves through it and burning it out. If the dynamo does not furnish current enough for the lamps, the accumulators supply the balance, and in doing so, strengthen the field magnets and cause an increase of current in the dynamos. When this reaches a greater amount than that needed by the lamps, the surplus goes to the accumulators, and at the same time decreases the magnetism in the field magnets so as to preserve the balance. At the maximum speed of the machine, the cells are receiving their maximum charge, and the current to the lamps is of normal amount. Two sets of brushes are here necessary as in the other case. Mr. Barrett, of Springfield, Mass., has fitted a train of three cars on the Connecticut River Railroad, with electric lights to be run from a dynamo in something the same way as these just described. The peculiar arrangement of the trucks under an American car renders it a matter of difficulty to obtain the proper speed of the dynamo, and I am told Mr. Barrett has had much trouble with the connections between the axle and countershaft. If these are not kept tight the cable slips. If too tight it breaks. An ingenious device like a friction clamp transmits the power from the countershaft axle to a pulley upon it. This is governed by centrifugal weights balanced by stiff springs. When the dynamo runs at its normal speed these just balance the friction of the clamp and there is no slip. Any increase of speed then causes the friction to diminish, and the pulley slips upon the shaft, till equilibrium is restored. Twenty-four Julien accumulators are connected with the circuit as a regulator, and to keep the lamps lighted when the train stops. A centrifugal governor breaks the circuit of the accumulators when the speed slackens.

A third arrangement of electric car lighting is by accumulators on the train to be charged by a dynamo at a central station or terminus of the road. In England a Pullman train has been running some years, lighted by electricity supplied from accumulators charged when the train is at rest by a dynamo driven by a gas engine. The Pennsylvania Railroad Co. experimented more than two years ago with accumulators charged at one end of the line. When the train arrived at Jersey City, the trays containing the cells were removed from the car to a charging room, their places being supplied by spare cells previously charged. The empty ones were charged to be replaced in the first car needing its batteries changed, and these in turn to some other car. The changing of the cells in a car took about 10 minutes. These experiments were in the main satisfactory, but the weak point was the life of the cells, the plates of which after a time buckled and fell to pieces. These cells were furnished by the Brush Electric Co. for these experiments, but they declined to send out any more to be used in the same way until the Pennsylvania railroad experiments should be ended.

The estimated cost of fitting a car with 10 lamps and batteries for 70 ampere hours was about $300 per car.

In the month of January of the present year, the Julien Electric Co. placed 60 cells of their accumulators in boxes on car No. 90 of the Boston and Albany Railroad, and put ten 16 c. p. lights in the car. These proved to be insufficient and the number was afterwards increased to 24, of which 20 were on the car and four over the platforms. This car was run some two months as an experiment with such excellent results that in March and April the trains leaving Boston and New York at 4:30 P. M. every day were fitted up with the same system. (These trains are also heated with steam from the locomotive, and there are no fires or oil lamps in any of the cars.) Each coach and parlor car is fitted with twenty-two 16 c. p. incandescent lamps, of which two, are over the platforms, 16 in the body of the car and the rest in the vestibules and toilet rooms. The lamps in the car are arranged opposite each other in two rows in the top of the car, and are on two circuits entirely independent of each other, each of which has a switch of its own by which the lamps may be turned on or off. The platforms are so arranged as to be lighted from either end of the car. They may, if desired, be lighted only just before reaching a station and extinguished just after leaving it.

Sixty cells of Julien accumulators are arranged in boxes under the car, 30 cells on each side. The weight is about one ton. The boxes are neat and ornamental in appearance, and the 30 cells on each side of the car are entirely independent of those on the other side, and are separately wired as far as the switch-board.

The cells have a capacity of 150 ampere hours and 60 volts on each side of the car. As 60-volt lamps are used, the accumulators on either side of the car will run all the lamps, but of course for only half the time the whole will do it. They are arranged in trays of six cells each, furnished with handles ; they weigh 200 pounds and can be raised from the ground and put in the car by two men. The trays are fitted on the outside with stiff brass springs, which, when the trays are in place bear against each other, and form the connection between each tray and the next. When the trays are in place in the boxes the connections are all made. There are, therefore, no wires to disjoin or connections to make when it is desired to remove a tray for examination or otherwise. From the boxes on each side of the car, wires are carried underneath the car to a switch-board in one of the toilet rooms, which also receives the terminals of the lamp circuits. The switch-board is so arranged that the number of cells in use can be varied from 27 in series to 30 in series, the others being added from time to time, to keep up the candle-power of the lamps, as the E. M. F. of the cells falls. Experiments are now being made to do away with the necessity for this, and if it is found practicable, it will be discontinued.

Two terminals underneath the middle of the car on either side serve to connect by means of plugs a pair of cables connected with wires leading to a dynamo in a lighting station a little way off. These terminals are of different size so that no mistake can be made in the connections. When the accumulators are charged the whole 60 cells are placed in series, when they are connected to the lamps there are two series of 30 cells coupled together. In order that there should be no confusion or errors in doing this, I designed a switch which should, by a single movement in one direction, of four levers coupled together, throw all the cells in series and connect them to the dynamo circuit. In this position they are entirely detached from the lamp circuits and no current can pass to the lamps. When this switch is thrown in the opposite

Digitized by Google

direction the cells are cut off from the dynamo, coupled in two series of 30 cells each, and connected to the lamp circuits, which, however, do not light until turned on by the special switches for that purpose.

It is quite unlikely that an accident to either of the lamp circuits or the batteries on one side of the car would disable the other. By turning out the lamps on one circuit, therefore, the others may usually be kept burning till the train arrives at its destination. In two instances this arrangement of circuits has proved very valuable.

All the cars except one are fitted with Weston incandescent lamps said to take 1.1 amperes. The remaining car has Edison lamps, which are proving so satisfactory that it is quite probable all new work will be equipped with the Edison apparatus. The cost is also much less than that of the Weston lamps.

When the train arrives at Boston it is put on a side track near which a line of poles has been set, and the dynamo wires strung upon them. Opposite each car a pair of terminals serves to make connection with the car, and the charging begins. A current of 18 amperes is run in for several hours, dropping to 12 and sometimes 10 amperes toward the end of the charge, which is now 180 ampere hours, to the 60 cells in series. If there were no loss we could draw out 360 ampere hours in the lamps. Assuming that the lamps use 1.1 amperes each, we actually use about 22 × 1.1 ampere × 9 hours = about 216 ampere hours or 60 per cent. of what is put in. If the lamps are required an extra hour or two there is plenty of reserve for them. [Note B.] The attempt was made to reduce the charge to 140 or 130 ampere hours, but as some of the batteries were not in first-class condition the results were not so good.

The intention is always to have a surplus of current in the battery. For the present the trains run a round trip to New York and return with one charging, but it is not yet quite certain that it can be done in the long nights of winter.

The cost of fitting these cars with accumulators and lamps was, when complete, about $900 per car. Others fitted in the same way would cost less, as on this work the men were all inexperienced and there were no plans or precedents. The cost of operating the lights is not far from $2 per car per day, or about one cent per hour per lamp. When the lights are needed a longer time, as in the dark days of winter, the cost per lamp hour would diminish. This is about 10 times that of oil, and very nearly the same as for gas, but taking into consideration the amount of light obtained, electricity is the cheapest of the three, and immeasurably the most convenient. The light is very brilliant, well diffused, steady, and satisfactory beyond all expectations. A very noticeable feature of these cars is, the entire absence of heat, and the purity of the air, which is as fresh and sweet in the car at the end of its trip as before it leaves the first station; this, together with the absence of danger from fire, especially commends it for sleeping cars.

The Electrical Accumulator Co. have also lighted some cars with success, for the Fitchburg and Old Colony Railroads at Boston.

The electric light has come to stay. It is the only one which anywhere near fills the conditions of a satisfactory light for railway trains. It can be readily adapted to almost any conditions to be met with in practice.

Oil lamps, and stoves in cars, must follow where the old couplers and hand brakes for passenger trains have gone in this country, until electricity and steam heat have made the roasting alive of scores of people pinned fast in a railroad wreck as impossible as the air brake and Miller platform have made the telescoping of a train into a shapeless mass of ruins, as happened formerly so often. Not many years hence, we may well hope, one will be as uncommon as the other.

NOTE B.—Mr. A. Reckenzaun in a recent article on storage batteries, gives the average efficiency as not less than 70 per cent. The Julien company claim, I understand, 80 to 85 per cent. for theirs. Doubtless this can be realized under special conditions, but my own experience would not warrant me in assuming so much in car lighting,—at least until the most favorable conditions of use are better understood.

ABSTRACTS AND EXTRACTS.

ON REVERSIBLE LEAD BATTERIES AND THEIR USE FOR ELECTRIC LIGHTING.[1]

BY DESMOND G. FITZ-GERALD.

(Concluded from page 197.)

FOR, a true "battery equation" is of course independent of the resistance of the circuit, and indicates a definite E.M.F. Conversely, if the E.M.F. alters—temperature and certain other conditions remaining the same—we know that the given battery equation no longer applies, that the original chemical reaction has given place to or has become complicated by another chemical reaction.

I take two strips of platinum, to be used as negative elements with a positive spongy lead in an electrolyte of dilute sulphuric acid. One platinum strip (A) I coat with a paste of electrolytic peroxide of lead; the second strip (B) I coat with a paste composed of one part of electrolytic peroxide of lead and one and one-third part of sulphate of lead (equivalent weights, roughly), mixed together and with water. The couples are circuited, consecutively, through 60,000 ohms and a reflecting galvanometer of high resistance. The A couple, as soon as the negative becomes moistened by the electrolyte, gives a steady deflection of 130 divisions, corresponding to an E.M.F. of about two volts. I short-circuit this couple for 30 seconds, or for ten times this period—of course the deflection falls to zero; but, when the short-circuit is broken, the spot of light moves back to 130 within a few seconds. The B couple, which contains sulphate of lead in addition to the peroxide, gives 128 divisions, falling steadily, within a few minutes, to 72 divisions, corresponding to rather more than one volt (this through a resistance of over 60,000 ohms). I short-circuit this couple for one second: on breaking the short-circuit, the deflection is 20 divisions, becoming in five minutes 67 divisions. A strip of plain platinum gave a deflection of 56 divisions, falling in five minutes to 42. It must be admitted that the result obtained with B was somewhat better than this; nevertheless, the effect of the sulphate in reducing the efficacy of the peroxide is sufficiently striking.

Still more so is its effect in the case of solid peroxide (lithanode), not in contact with any other simple conductor within the electrolyte. But in order to judge of the effect in this case, we must be able to analyze the lithanode chemically at the outset, and also when the E. M. F. between it and the spongy lead has fallen to any given extent.

A convenient and, with due care, an accurate method of determining the percentage of lead peroxide in "lithanode," or any other active material containing this oxidant, is to add cautiously the finely powdered material to the solution of a known weight of crystallized protosulphate of iron, acidulated with somewhat more than half an equivalent of hydrochloric acid, until the solution no longer gives a blue coloration with a drop of potassic ferricyanide solution, or red prussiate of potass. It is advisable to triturate the powder in a mortar containing the acidulated ferrous solution at a temperature over 100° Fah. Of course it is generally possible, especially after a rough preliminary trial, to add at once sufficient of the powder to nearly convert the whole of the ferrous salt into ferric salt; afterwards, the powder is added in minute portions until the blue coloration is no longer produced. If too much of the powder be added, free chlorine and a distinct brick-red coloration are observable. In regard to the numerical data, 7.8 grams of the ferrous salt ($FeSO_4$ 7 H_2O) are equivalent to 1 gram of chlorine or to 3.36 grams of PbO_2.

I took a fragment of one of my old lithanode plates (marked X), of which the capacity was about 16 ampere hours (at a potential not lower than 1.8 volt), and found by the above method that it contained 70.7 per cent. of PbO_2. I then made use of another similar fragment of the plate as a negative element, until the difference of potentials between it and spongy lead fell to 1.8 volt. This fragment having been washed, and slowly dried at a low temperature, was reduced to powder and found to contain 55 per cent. of the PbO_2 originally present. Only 22.2 per cent. of this quantity of peroxide had become reduced, 77.8 per cent. was apparently unaffected: and yet the reaction upon which the E. M. F. is dependent had become in some way modified, since the electrometric indication on open circuit had undergone a permanent diminution to the extent of about 10 per cent. Let us examine this result.

1. Read before the Society of Telegraph Engineers and Electricians, London, March 10, 1887.

Digitized by Google

The weight of peroxide present in one pound avoirdupois of the original plate was $\frac{16 \times 70.7}{100} = 11.3$ oz. In becoming exhausted to the extent of no longer giving with spongy lead an E. M. F. above 1.8 volt, 1 pound of the plate will lose 2.5 oz. of peroxide. To what number of ampere hours does this weight of peroxide correspond?

The ampere hour equivalent for silver, according to Lord Rayleigh's latest determination, is 62.137 grains; this equivalent for peroxide of lead would therefore be :—

$$62.137 \times \frac{239 \text{ (\textit{i. e.}, mol. wt. of Pb } O_2)}{216 \text{ (\textit{i. e.}, twice at. wt. of Ag.)}} = 68.75 \text{ grains.}$$

Now the number of grains in 2.5 ounces avoirdupois being $2.5 \times 437.5 = 1{,}094$, the number of ampere hours corresponding to 2.5 ounces of $Pb O_2$, or to 1 pound of the "X" lithanode will be—

$$\frac{1{,}094}{68.75} = 15.9.$$

It may be admitted, therefore, that when, as in the case of lithanode, local action in the negative element is entirely eliminated, the yield of the battery in ampere hours is strictly proportionate—as might have been anticipated by theory—to the quantity of peroxide reduced in each cell.

This experimental result is interesting from other points of view than that of the electro-chemical equation of the lead storage battery. From the present standpoint of practice, 16 ampere hours of useful capacity per pound of negative element is a splendid result. With lithanode of more recent manufacture it has been surpassed; but it has never, I think, been approached with any other form of negative element. And yet, from the theoretical standpoint, what a poor result: two and a half ounces of peroxide utilized in one pound of negative plate containing eleven and a third ounces of the peroxide! It is not likely that we shall stop here: I for one, do not intend to stop here: there is ample room for further improvement.

It might perhaps be expected that I should suggest a battery formula in substitution for that to which I have objected. I am sorry that I am unable to do so, or even with any degree of confidence to attempt an explanation of the fact that so large a percentage of the peroxide present in a negative element should remain useless and inert for all practical purposes. I have thought it possible that the residual peroxide of lead might be in a state of combination, that a comparatively inert sesquioxide of lead might be formed according to the equation

$$2\,PbO_2 + 2\,H_2SO_4 + Pb = Pb_2O_3 + PbSO_4 + H_2SO_4 + H_2O.$$

But although this view, on the assumption that the sesquioxide formed may resist or be protected from the action of the sulphuric acid present in the electrolyte, may explain the recovery of apparently exhausted plates when they are left in contact with the acid, I have not been able to bring it into general accordance with the results of experiment and with those obtained by chemical analysis. It should be mentioned, however, that, although the equation is in opposition to the experimental results obtained by Gladstone and Tribe, this view is in some measure at least confirmed by those obtained by Schenck and Farbaky. These investigators found that, in charging a lead secondary cell, 2.23 grams (34.426 grains) of H_2SO_4 become liberated per ampere hour current; and that, in the discharge of the cell, 2.25 grams (34.736 grains) of the acid enter into combination. Now the ampere hour equivalent of sulphuric acid is 1.826 grams (28.192 grains); and we may assume that at least this quantity enters into combination with the spongy lead positive in the production of the ampere hour current. There would remain, therefore, only $34.736 - 28.192 = 6.544$ grains of H_2SO_4, or .23 of the equivalent, to combine with monoxide of lead reduced from the peroxide in the negative element. The ampere hour equivalent weight of oxygen would be derived from this element, an ampere hour equivalent of lead monoxide would be produced; but only .23 of the latter equivalent would become converted into sulphate, leaving .77 of the equivalent in admixture or in combination with residual peroxide of lead.

Having had some experience of the behavior of sulphate of lead when used as a depolarizer in batteries of small E. M. F., I have thought it possible also that this salt might undergo an initial effect of reduction; but this view again has not been confirmed by any experiments I have been able to make. What is required is discussion on these matters; this will probably provoke other suggestions which may lead to the extension of our knowledge.

I fear I have already trespassed too far upon your attention; but I have yet to submit to your consideration, as briefly as may be, a scheme for the supply to private householders, who may be desirous of adopting the electric light on a small scale, of the electrical energy necessary to realize their wish. This would be supplied from central stations (but without any outlay for insulated conductors beyond the "wiring" of the actual domiciles to the extent rendered necessary by the number and position of the lamps required) in the form of charged plates—the positives being conveyed in a closed receptacle and in a damp condition, and the negatives in a dry state. Sulphuric acid also would be required; the quantity per horse-power hour electrical being, according to the accepted theory, 3.12 pound of H_2SO_4. I think, however, that it will be found that considerably less than this quantity—say two pounds of the strongest commercial acid—will suffice. This acid would be supplied by the carboy; and a measured quantity would be added to each cell when the exhausted elements are replaced by fresh ones.

For each horse-power hour electrical supplied - corresponding, we will say, to three 20 candle lamps maintained incandescent for five hours—we should have, in the stage which the practical solution of the problem has at present reached, to transport about 40 pounds of battery plates It may be safely said that the total weight to be transported will be under 45 pounds, and I hope that before long this weight will be considerably reduced. The maximum distance to which this weight would require carriage would probably be under half a mile—for it would be more economical to multiply stations than to augment this distance. On the return journey, the exhausted plates and their receptacles, practically the same in weight, would have to be conveyed.

One ton weight of plates distributed would correspond to at least 56 h. p. hours electrical. The question is, what would be the cost, under conditions of practice which admit of considerable latitude, of distributing this weight of material? Upon the answer to this question depends the extent to which this system of distributing electrical energy could be commercially developed. A small percentage of the general public, if safeguarded from all trouble, would be willing to pay even as much as 1s. per horse-power hour electrical. A very large percentage indeed, I am convinced, would pay 4d. for the same quantity of available electrical energy Anywhere between these two limits a considerable amount of business might probably be done. Nothing but an actual trial of the system, on a small scale perhaps, but extending over a considerable period of time—so as to give some scope to the capacity for organization, which has accomplished such marvels in our postal department—will give a conclusive answer to the above question. It is easy to suggest figures which would show the system to be absurdly impracticable; but, as I have elsewhere observed, it would be easy also on the same lines to show that the milkman, who, anywhere in his district, will send horse and cart, man and can, to deposit even a ha'p'orth of milk at the area door, must be financially in desperate case. But there may be some, here or elsewhere, who have had experience of work analogous to that which I have in contemplation; and their opinion, as well as the suggestions they might possibly offer, would be entitled to respect, and might be of considerable value.

In reading over what I have written, I find I have not said anything as to the spongy lead positive element of the lithanode battery, because the main difficulties—the real points of importance—to be overcome have been in the negative element of the couple, which is often erroneously termed the positive element or plate, because it happens to be the positive electrode in charging the battery. To manufacture an efficient positive from the lithanode unconverted material or otherwise, was comparatively an easy matter; and there is a choice of several positive elements which leave little or nothing to be desired.

I would draw your attention to the two electroliers consisting of five lamps each, which are before you. They were made by Messrs. Faraday, and the lamps are supplied by 14 cells, weighing about 10 pounds each, and having a charging capacity of $\frac{2}{3}$ h. p. hour.

The discussion was commenced by

Dr. J. H. Gladstone, who replied to Mr. Fitz-Gerald's comments upon the work of himself and Mr. Tribe. In regard to the *lapsus* in connection with the question of local action, he assured Mr. Fitz-Gerald that if the "white sulphate" had not existed, the Planté or Faure battery would have never been known, and that it really was a friend as well as an enemy. No doubt a misconception in regard to local action had arisen from the example given in the book not being in sufficient detail. The peroxide did not touch the lead plate at merely one or two points, but really presented, as shown by the microscope, a roughened surface with millions of points of contact and intervals, the whole being wet with dilute sulphuric acid. There was not a symmetrical flat plate of peroxide by any means, and the dilute sulphuric acid permeated the whole of it, and caused a thin coating of sulphate of lead to be partially deposited on the metallic plate, and so impeded the action of the cell. If that coating of sulphate covered the whole surface of the plate, its action would not only be diminished but reduced to zero. Mr. Fitz-Gerald's chemical formula very nearly corresponded with their electrolytic formula, but he strongly protested against Mr. Swinburne's stricture that chemists did not properly apply their knowledge to the study of electrical questions, but that in the book referred to it was supposed that they, Messrs. Gladstone and Tribe, had treated a salt as a compound of an oxide with an acid. That was a notion of antiquated chemistry, discarded some 30 years ago, and was not admitted by modern chemists. The reason why the full value of complete re-action was not obtained in the Faure and Planté

Digitized by Google

cells was that the mixture of the sulphate of lead interfered to a large extent with the ready reduction of the oxide of lead. Mr. Tribe had looked very carefully for the existence of any of the lower oxides, but had been unable to trace any indication of them. Much remained to be done in connection with secondary batteries, at present there was nothing final in regard to the study of them, and much investigation had to be made, among other things, as to the conducting power of the mixtures employed in batteries, intended for practical purposes. He hoped that the result of the labors of men who, like Mr. Fitz-Gerald, combined a practical knowledge of the subject along with a knowledge of chemistry, would be to enable a true theory to be arrived at in regard to reversible lead batteries.

Mr. W. H. Preece said there was a physical side of the question in addition to the chemical side which had been treated by Mr. Fitz-Gerald. His experience with cells for three years showed that by the use of hydrometers the variation of the density of the solution indicated the chemical action which took place. When a cell was charged it reached a point of greatest density and had dissolved the greatest quantity of sulphuric acid. When a cell was discharged the sulphuric acid was transformed into sulphate of lead and its weight was thereby reduced. Cells that he had in use showed that there was a fall in the hydrometer of one degree for every nine ampere hours taken out, and it was perfectly easy to ascertain by the hydrometer what charge had been taken out, and what remained in, if proper readings were taken. Mr. Fitzgerald might abhor the existence of "white sulphate," but it was impossible to obtain a cell without it Sulphating always existed, but he (Mr. Preece) had adopted Mr. Barber Starkey's plan of using carbonate of soda to dissolve it, and found that the method was very effective,

The President announced that the discussion would be resumed at an extraordinary meeting to be held on March 17th, and the meeting adjourned.

DISCUSSION, CONCLUDED, MARCH 17.

The adjourned discussion on Mr. Fitz-Gerald's paper was continued.

Prof. G. Forbes drew attention to the fact that in the Union cell the capacity appeared to be greater for a slow than for a quick discharge; a great feature in the battery was its lightness compared with its storage capacity. The nature of the material of which the electrodes was composed was remarkably good, mechanically. The plates, which had been in extensive use, appeared to be quite as good as new ones, there being no deterioration apparent. It was noticeable that white sulphating never took place. He considered that very great forward strides had been made by Mr. Fitz-Gerald. There were several features in the cell which deserved notice, viz., the way in which the plates were supported and the way in which they were kept apart by the use of celluloid. Platinum was used for contacts and also mercury cups; he did not consider the latter an objectionable feature; in fact, the mercury was used because it was found to answer the required purpose well. He would like to have more information about the celluloid, as it appeared to be a very useful material. The employment of platinum was the one objection he saw in the cell, as it must be expensive. The results of all the tests showed that a considerable advance had been made. He was puzzled at a peculiarity which he had noticed in the battery; in the ordinary storage cells it was found that when they were being charged they had an E. M. F. of 2¼ volts, but while being discharged this E. M. F. fell at once to two volts, consequently there was a loss of efficiency in the ratio of 2¼ to 2; in Mr. Fitz-Gerald's battery there was no such difference; what the cause of the difference was he was not prepared to say—was it due to the hydrogen sticking to the plate? If it were so, the new plates would appear to depolarize like the plate in a Smee's cell.

Prof. Silvanus Thompson said that he had tried one of Mr. Fitz-Gerald's cells and it had behaved exceedingly well; that is to say, it had not sulphated and no buckling had taken place; there were also no signs of deterioration. He was a little disappointed at the rate of discharge in comparison with the size of the plates; a higher rate would probably be obtained if the metal in connection with the lithanode was of larger area, but inasmuch as platinum was used the cost difficulty would arise. Lithanode itself was not a sufficiently good conductor to enable a large backing to be dispensed with, such as was used in "grid" batteries. He disagreed upon the sulphating question; there are two sulphates, viz., the grey and the white. The Pb SO_4 was easy to oxidize, but if formed in a cell and reduced to Pb O, then this became Pb_2 SO_5 when the battery was idle and choked the cell. Mr. Preece had recommended the use of the hydrometer for testing the charge in the batteries; he could heartily endorse this, but he differed from the figures given, as these must depend upon the bulk of liquid present. If we know the E. M. F. of an accumulator we ought to be able to calculate the chemical action, *i. e.*, the latter ought to correspond to the calculation if correct. There were five formulæ which had been suggested, and the question was, which was correct; the first was as follows:—

$$+ H_2 \mid O - \tfrac{1}{2} Pb\,O \mid O - \tfrac{1}{2} Pb \mid O$$
$$68000 - 6070 - 25150 - 37200 = .81 \text{ volts.}$$

The 2d gave 1.77 volts; the 3d, which was practically Mr. Fitz-Gerald's, gave .96 volts; the 4th was the commonly accepted one, and was as follows:—

$$+ Pb \mid O - (H_2\,O) + (Pb\,O \mid SO_3 \mid Aq) - Pb\,O \mid O) + (H_2\,O) + (Pb\,O \mid SO_3 \mid Aq)$$

the thermal equivalents of which were

$$51060 - 68800 + 24840 - 12140 + 68800 + 24840 - 88600 = 1.93 \text{ volts.}$$

This was therefore a fair representation of what happened *finally*, though not at first.

The 5th formula was as follows:—

$$+ Pb\,O \mid O + Pb \mid O$$
$$52400 + 51060 - 103460 = 2.2 \text{ volts,}$$

which was, therefore, the true action. Sulphating takes place in two stages, as shown by Planté's experiment in contradiction to what Dr. Gladstone says.

Mr. Sellon did not consider that storage batteries were still in their infancy as suggested in Mr. Fitz-Gerald's paper. There were not many points in which improvements were possible except as regards care in their manufacture and in their management. Practically no advance had been made in the general principle since the batteries were first brought out. The highest result shown in the tables given by Mr. Fitz-Gerald did not exceed those attained in 1881. The good working of a battery depended greatly upon the uniformity of the electrolyte, and the method of daily replacing plates would not enable this to be attained. He did not think that high capacity and durability could be maintained after a time in the solid peroxide plates, as clogging up will take place, and the unequal distribution of the charge which will ensue will eventually spoil them. The distributed lead of the grid in the ordinary plates played an important part, which was absent in the lithanode. He considered that the local action which was so often spoken of was a mere bugbear. The figures which were given of the various accumulators proved that the E. P. S. cells gave 30 amperes per pound weight of active material, and under exceptional conditions as high as 47 amperes as against 16 amperes for the lithanode. He believed that four-fifths of the lithanode plate was practically inactive.

Mr. Andersen stated that an examination of the figures proved the comparatively low results obtained from the lithanode plates.

Mr. Bernard Drake thought the question with regard to this new battery from the consumer's point of view was one of first cost and durability. What people wanted to know now-a-days was whether they could obtain a cheaper battery which would give them reliable results in working and entail no trouble. Time alone would show whether the battery before them met these requirements. Mr. Sellon complained that progress in improvements in secondary batteries was slow. If this was so, the reason was that whenever modifications were made it was necessary to wait many months before any idea could be formed as to whether the alteration was an improvement or not. Even then experience had shown that one was almost certain, if guided by any single experiment, to fall into some error ten times worse than the one which was being rectified. He thought it impossible to determine a fixed output for each maker's cell, as any one could increase the capacity at the sacrifice of durability. For instance, with the E. P. S. form it was usual to vary the output between four and six ampere hours per pound of plate. The figures given by Mr. Fitz-Gerald seemed to include the connections as well as the plates. This, the speaker also thought, was not a fair basis for comparison, as the connections were often made larger than necessary in order to reduce the internal resistance of the whole battery, the resistance of the connections being quite as serious a consideration as the internal resistance of the cell itself. He was glad to see that Mr. Fitz-Gerald agreed with the theory propounded by Mr. Gorham and himself at the meeting of the British Association as to the grid being protected by a dense coating of peroxide. This conclusion was arrived at after a great number of experiments, and he was of opinion that the protecting coat was almost, if not perfectly, dry when a plate was in good condition. If a plate was exhausted, he thought the coating of peroxide became moist, and local action immediately took place. Prof. Forbes had shown a table of some tests with the lithanode plates, in which the capacity of the cells varied considerably, according to the rate of discharge. Had Prof. Forbes taken into consideration in these the recuperative power of the cell? He thought the capacity was not materially affected by the rate of discharge, provided the cell was constantly allowed to recover itself. The proposal to carry the plates backwards and forwards to a charging station was very similar to temporary lighting, with which he had had considerable experience. Although the figures as to cost incurred on any one trial installation would seem to show that this class of work might be undertaken and made to pay its way, yet as the result of a whole season's working with about 25 tons of cells he had found that the price would have to be such as would prohibit any very general use of the system. Mr. Sellon and his engineer had given them comparisons between the E. P. S. and the lithanode

Digitized by Google

plates. These were scarcely to the point, as the whole of the capacity was taken as coming from the active material alone in the E. P. S. plates, the weight of the grids being omitted entirely, whereas about a quarter of the total capacity could be obtained from the grids alone, left unpasted. Prof. Thompson's explanation of the action of the battery was both clever and interesting.

Prof. Ayrton agreed that as regards the capacity per rate of discharge, Mr. Drake was correct in his surmise. He would like to ask whether with the lithanode plates the current kept constant, and then eventually suddenly fell off, and whether this was due to fall of E. M. F. or increase of resistance. He objected to the use of the expression horse-power hour capacity, as it was like speaking of living at the rate of £100,000 a year for a minute when one buys a watch. What was really required was the total number of watts which could be obtained for £1, and not for one pound, as weight does not matter, except in the case of tramcars. Mr. Drake's statement that carting about does not pay on a large scale probably meant that there were not enough people willing to pay so as to make it worth a system being carried out on a large scale. He thought it very advisable for some definite names to be given to the plates of accumulators, as the names anode and cathode are not very happy terms.

Mr. Fitz-Gerald, in replying, said that he wished first to correct an error which had been made at the end of his paper, where the weight of the boxes should be stated to be 20 pounds and not 10 pounds. He and Dr. Gladstone were substantially in agreement, as he had misunderstood the terms used by him; he would accept Gladstone and Tribe's formula except as regards the initial action. He appreciated Mr. Preece's remarks as regards the value of the hydrometer; such experiments threw considerable light upon the question of the amount of sulphuric acid combining with the lead plates. As regards the suggestion that experience would prove that the formation of lead sulphate was a necessity, his own experiments proved quite the reverse; he had charged and discharged one of his cells 80 times, and had never seen any formation of lead sulphate. The rate of discharge of the lithanode elements could be varied within very wide limits. He did not believe that it could be proved that either the capacity or rate of discharge of the lithanode elements was less than that of other batteries; it was exceedingly difficult to take in all that had been said upon this point, and therefore he could not argue the question out on the spur of the moment.

Mr. Swinburne (Communication): I was sorry to be too ill to attend the discussion on Mr. Fitz-Gerald's paper. If Mr. Fitz-Gerald's lithanode is half as good as it looks, it is certainly the greatest advance in secondary batteries since the days of Planté. Many seem to have tried to make plates of peroxide of lead so as to avoid local action, but they have not been commercially successful. The late Mr. Tribe started the idea, but his peroxide seems to have been too soft. The writer tried to make peroxide by electrolysis of an alkaline solution, but his peroxide on the other hand was too dense and impervious. Mr. Fitz-Gerald seems to have solved the problem, and to have got over the chief fault, that is if lithanode is itself durable. Mr. Fitz-Gerald does not say how he makes lithanode, but it is presumably a mixture of lead sulphate and peroxide, the sulphate being the binding material. If the lead sulphate is the only binding material it seems probable that it will be eventually turned into peroxide if the cell is overcharged, as in practice all cells are, when the plate will fall to pieces. The material must be either impervious or pervious, or it may be formed of pieces of impervious material with chinks and crannies so as to expose a large surface. Thus if the particles were examined under the microscope one might expect to find lithanode made up of innumerable little lumps agglomerated together with interstices between, so that there is an enormous surface exposed. The material might thus be almost impervious, and the thin film being converted into peroxide would give the plate enough output. The peroxide made from alkaline solutions is almost impervious, but on discharging a very thin film of sulphate is formed; it seems, therefore, as if the peroxide must always be to some small extent pervious. The sulphate in the lithanode cannot be exposed to the acid at any points, for if it were, it would be converted on charging or overcharging into peroxide. The sulphate must therefore always be protected by the peroxide, just as the lead in an ordinary plate is; the cementing material on which the whole life of the plate depends, is therefore protected from the acid in just the same way as the lead is in an ordinary battery. It would thus seem that there is no reason to suppose that lithanode will last any longer than an ordinary lead plate. This always assumes that lithanode is merely lead peroxide cemented together by lead sulphate, and I hope my reasoning or my premises may be wrong. There is, however, one fundamental difference, that is, that lithanode can only be injured by overcharging, while the prejudicial action in lead plates goes on practically always.

Mr. Fitz-Gerald's theory that the lower electromotive force is due to the formation of a sesquioxide of lead seems improbable. Some time ago I objected to this theory, that even if such a compound can be formed, it cannot be formed in the presence of sulphuric acid. It seems much more likely that the fall in electromotive force is due to the acid in the interstices being used up, so that there is only very weak acid or water available. Perhaps basic salts are formed; this would account for the fall in electromotive force if they were formed in one plate or both.

The failure of cells is more often due to the reduced plate than is generally supposed. Before drawing any conclusions, it is always advisable to test the plates with proof plates, as described in my paper a week or two ago. I would suggest that the experiment with the platinum plates, one having peroxide and the other peroxide and sulphate mixed, does not definitely prove anything. The sulphate may have merely insulated the peroxide in the plate. It also seems strange that such cells could give anything like two volts.

Dr. Gladstone has to some extent misunderstood me. I certainly did not refer to him when I spoke of chemists forgetting their chemistry when working with electricity, as is evident from the context, more especially as it was Messrs. Gladstone and Tribe who brought people to their senses and reminded them that lead oxides did not remain in the presence of sulphuric acid. Dr. Gladstone goes on to say, however, that to view lead sulphate as containing lead oxide was very antiquated chemistry. I do not think he can have understood the drift of what I said. The most modern chemists certainly often write such a compound of lead as the sulphate Pb O SO_3, as if it were a compound of Pb O and SO_3. Though Dr. Gladstone may not write Pb O SO_3, surely he writes the reaction as if the peroxide and the spongy lead were first converted into lead oxide, and the lead oxide were then acted on by the acid to form sulphate with the elimination of water. What I tried to show was, that if such an action took place, the only energy available as electrical energy would be that due to the algebraical sum of the energies of the formation of lead oxide; but energy equal to that due to the formation of lead sulphate from lead oxide would be converted into heat, and would not be available in the outer circuit. If the lead and lead peroxide were converted into Pb O, and a secondary action with the electrolyte then took place, one would expect to get the same electromotive force from lead cells whatever the electrolyte. Of course I am aware that the energy of combination does not fully account for the electromotive force of cells, and it seems probable that there are what might be called Peltier effects of enormous magnitude. For instance, if water is decomposed, and with platinum plates, and also with a zinc cathode and peroxide anode, the electromotive forces required are very different, while the chemical and physical changes are the same in each case. Dr. Gladstone lays stress on the value of lead sulphate as it prevents local action in a cell while standing, and points out that its formation is therefore necessary to the life of the cell, but he does not say that the high electromotive force of a sulphuric acid lead cell is due to the strong affinities of the electrolyte and coatings.

Mr. Preece mentions that he has tried sodium carbonate to remove lead sulphate as proposed by Mr. Barber Starkey; it surely would be better not to wait till a lot of sulphate is formed and then reduce it, but to put a little sodium sulphate, not carbonate, in the cell at first, to prevent the accumulation of sulphate, as proposed in my paper. It cannot be a good plan to put much sodium sulphate in a cell, as creeping may result.

ELECTRIC MEASURING INSTRUMENTS.

At a special meeting of the Glasgow Philosophical Society, held in the physical rooms of the University on Wednesday, the 20th of April, Sir William Thomson described and showed a "double chain of electric measuring instruments," which contained various features of novelty and great interest. Sir William stated that he had been engaged in devising a chain of current measuring instruments, which should measure currents through the whole interval, from a millionth of a milliampere up to 1,000 amperes, and a chain of voltmeters which should measure up to 40,000 volts. Six of the instruments shown were modifications of the old principle of the attracted coil, weighed in a balance. In the double acting volt balance there is a coil fixed to each end of the beam of the balance so that in the neutral position it lies between two fixed coils, parallel and co-axial with it. The balance is adjusted to its zero position by a weight, movable along the beam by means of a screw, while the adjustment for sensitiveness is obtained by a vertical screw and weight. The balance is made by a sliding weight, which moves along a scale forming part of the beam of the balance. When the zero position is nearly attained by this means, the reading is taken by means of a multiplying lever index, attached to the beam and scale. The requisite re-

Digitized by Google

sistance coils for the potential instruments are attached to them, and their variation with the temperature determined, four different weights being provided with each instrument proper to the temperature 15°, 20°, 30° respectively. In the current instruments, the resistance coils are, of course, omitted, the attracting coils being of thick copper. One most important novelty common to all the balance instruments, is the mode of suspension, by fine copper wires passing round cylindrical axes, giving the appearance between the axes of a miniature weaver's reed, which takes the place of the ordinary knife edge arrangement. This invention bids fair to oust the knife edge balance entirely, and not merely in electrical instruments, combining as it does, the advantages of great stability, strength and delicacy. Various other arrangements were shown in the case of the balance instruments. One had a scale pan for weights; a second, a series of cross bars at various distances from the middle point of the beam, on which weights were hung; while the weights in a third were hung in chains from the beam, each link being raised into position by a separate lever. Another new form of voltmeter was the marine instrument, which consisted essentially of a soft iron ellipsoid in the field of the coils, fixed to a vertical stretched platinoid torsion wire, an index pointer attached to the ellipsoid indicating the rotation of the ellipsoid when the current passes. This form, as its name indicates, is meant for marine use, the readings being unaffected by very considerable oscillations, such as it might experience on shipboard. An electrostatic voltmeter, which is a remote relative of the quadrant electrometer, was shown, for measuring high potentials. These instruments, together with the tangent galvanometer for small currents, will cover the entire interval, both of current and of potential measurements.—*Industries.*

DON'T TAKE A BACK SEAT.

MAKE up your mind that you will have a front seat in life, and attract to you the powers that carry you to the front seat. If (in mind) you take the back seat, you get only the back seat. The confident, determined mood of mind, steadily kept up, brings to you other confident people. Confidence, in the business world, means both cash and credit.

Don't be a screw! What keeps thousands of noses on the grindstone of hard times is that they have no confidence or courage in themselves to take risks or responsibilities. They keep a poorhouse in their minds and live in it. They aspire to be only a screw in the business machine, instead of striking out and making a machine of their own. The screws are book-keepers, telegraph operators, clerks, and all who never hope or plan for anything beyond a situation and steady wages. Confidence and brains combined find such screws ready made by the thousand. They make the screw do as much work for as little money as possible. When one screw is worn out they throw it aside and get another.

The screws find fault with the monopolist. Their real slavery is in their own minds. They never think, aspire, plan or demand in thought to be anything but screws. They think there is no place for them at the head of a business. Their first and great step towards staying permanently at the tail of a business lies in thinking that they must remain at the tail.

Real business does not lie alone in being industrious. The goody-goody books and maxims have only told half the story about industry. A great deal depends upon what you are industrious about. If you spend all your time in polishing pans or blacking boots, your industry wont carry you very high. The industrious mind in a rested body plans in an hour what brings in more money than a tin pan polisher may earn in a year. People who work only, or mostly, with their bodies have as good a right as the capitalist to work with their minds. The world always wants new things, more curious things, more improved things, more amusing things. No workman in any trade, any art, any profession, should be content with doing what some one else has done before him, even though he does it well. He should aim at doing something better than any one has done before him. When he can do this he must next push it on the world's notice.

Push is a talent as much as skill in any art. You can commence pushing by imagining yourself a pusher. Keep yourself before yourself in your mind as a pusher, and such a frame of mind will at length make you push. There is a power of continual imagination of yourself in any certain character which does make you more and more like such character. Imagine that the best belongs to you and you will find the best coming to you. Imagine the worst—see yourself in the poorhouse—and the poorhouse comes to you. Success, like charity, must commence at home—in the mind.

If now you are compelled to live in a poor room and on poor fare, do so only under protest. Keep your mind on the better room and the better fare. Don't say, "I s'pose I must always take up with this." I say rather, "I am going to have better things than these." You are then creating for yourself strength, not weakness. You are then ever strengthening this inexplicable mental attraction which will bring these things to you.—*Roller Miller.*

ENGLISH SALUTATIONS TO THE AMERICAN INSTITUTE OF ELECTRICAL ENGINEERS.

The following genial article appears in the *Electrician* of London, June 17th.

OUR AMERICAN COUSINS.

The meeting of the British Association on the American continent in 1884, and more particularly the visit which many of the members paid to the States on that occasion, have been not merely conducive to good relations between kindred races but productive of fruitful results to the community of science. In May of that year the American Institute of Electrical Engineers came into existence, and it was honorably represented at the Association's gathering at Montreal in the following August. A month later the Association furnished representatives to attend the Electrical Exhibition at Philadelphia. There is little doubt that from one of these points the society which in America corresponds nearest to our Society of Telegraph-Engineers and Electricians practically dates its active career; and equally probable is it that the English visitors contributed to make its beginning a hopeful one. At all events, the two societies are working on similar lines and for the same ends: and we may confidently assure the younger society of the sympathetic good wishes of its elder cousin in England. A more substantial proof of good-will would, we have no doubt, be forthcoming should the American Institute find it necessary to ask for it in the shape of subscriptions to their building fund—or to speak in the American manner, their "Permanent Quarters'" fund. If we hope that no such appeal may be necessary it is simply because we should prefer to see the money subscribed on American soil in proof of America's sincerity in patronizing—to quote the native language again—"the development of Electric Arts."

The position of the British and American societies is identical in respect to their indebtedness to an external society—that of the Civil Engineers in both cases—for their places of meeting. The former, it is true, possesses a separate establishment, liberally endowed, and already possessed of offices and reading room, with probably the finest electrical library in the world. At these premises, too, are held the Students' meetings, which have been only recently started, although the admission of students to the privileges of the Society dates many years back. We incidentally mention this fact for the benefit of our American friends, some of whom seem to have been much exercised on a point of dignity by a proposal to add to their roll a class of "Juniors." These juniors are spoken of disparagingly as boys who have no serious interest in the objects of the Society. We are naturally diffident in offering a common-sense suggestion to our hard-headed transatlantic relations, but it does seem to us that were they to call these "boys" *Students*, and take steps to make them live up to it, the question of dignity would be satisfactorily disposed of, as it has been here.

Except for the purposes above named, however, the English Society of Telegraph-Engineers and Electricians has been dependent during the whole of its lifetime, dating from 1868, upon the

Digitized by Google

generosity of the Institution of Civil Engineers for the use of their splendid theatre, in which the Society's fortnightly meetings during the spring and winter months of the year are held. The American Society, on the other hand, although only three years old, aspires already to own a separate "house" all to itself, and the cost of which is to be $30,000. The sum is not extravagant, and the charge for maintenance, exclusive of personal service, is estimated at only $2,000. Of the prime outlay it is thought that a third can be collected, the remaining two-thirds being borrowed at 4 per cent. interest, which is included in the figure mentioned for maintenance. The scheme is a bold one, considering the present numerical strength of the Society; but the Council are confident of largely augmenting its members, and more especially when it enjoys the advantage of possessing an establishment of its own "where men engaged in the same pursuits could freely interchange ideas and afford each other mutual encouragement." A library is also in contemplation, the general plan being "to establish an institute of such repute that it will become the natural custodian of valuable collections of books and apparatus which are now so frequently scattered when their owners pass away."

In commending this scheme to the favorable attention of our readers we cannot abstain from noticing the eminently sound and practical character of the American Institute of Electrical Engineers. Casting a glance over the list of papers brought under its notice between May 1884, and the corresponding month of the present year we are struck by the invariable utility of the subjects dealt with; and this impression is confirmed by such of the discussions as have been reported in American journals coming into our hands. But we have also been struck by the long-windedness of the speakers. It seems to be the custom of American electricians to invigorate their bodies during the session by frequent social gatherings, which take the form of dinners, and, if we may judge by what happened at the Philadelphia Electrical Exhibition, to obtain relaxation for the mind by indulging in infinite jest when the serious business is ended. These customs now recur to our memory in this relation, as explanatory of national traits which we had never been able to account for before. In one of the grotesquely humorous primers published at the fag-end of the exhibition there occurred the following description of electric lights, which, it was said, were of two kinds, namely, "Our kind, and the other fellow's kind." Our light is much brighter than the other fellow's light. The other fellow's light is surrounded by a cloud of non-luminous verbosity." Now, irreverent and unseemly as this sort of caricature may appear, it is not wholly useless or impertinent. For simple verbosity our American fellow-workers—or, more correctly speakers—incontestibly carry off the palm. When we take up an American technical paper we have always first to wade through or skip an exhausting oration. This we now very gladly attribute to the dinners. But for English verbosity of the "non-luminous" kind we have only one explanation to offer, namely, the absence of that humorous faculty which is ever alert in the native born American. On this side of the water we should be saved from many a non-luminous infliction if we were equally endowed with the sense of the ridiculous; and it is probably the American's superiority in this respect that has kept their electrical engineers strictly to the practical aspect of their profession, so soon as the preliminary orating has been got over. We have not obtained, and we hardly expect to receive from America any supremely valuable contributions to our stock of mathematical and scientific knowledge; but she has supplied us with much that is in the highest degree valuable in the domain of practical and applied science; and we are the more thankful for it, because its diffusion here may counteract our tendency to wander into fields of abstract speculation. The American Institute of Electrical Engineers has a very useful career before it; and the venture on which it is just now embarked deserves, and will receive, the best help we can give it.

UNDERGROUND TELEGRAPHY.[1]

BY CHARLES T. FLEETWOOD.

In the year 1816, Mr. (afterwards Sir Francis) Ronalds laid his first experimental line underground in his garden at Hammersmith, and convinced himself, at least, of the practicability of establishing telegraphic communication by means of insulated wires placed beneath the earth's surface. A small book published by him in 1823, entitled "Description of an electric telegraph, and of some other electrical apparatus," gives a full account of the experiments referred to. A trough of wood about two inches square, well lined inside and out with pitch, was placed in a trench 525 feet long and four feet deep; lengths of stout glass tube were joined together by means of shorter lengths of similar tube of somewhat greater diameter, the joints being made with soft wax to allow for expansion and contraction caused by the variation of temperature. A copper wire was drawn through the glass tube, and the tube was embedded in pitch, the covering being screwed down while the pitch was hot. Mr. Ronalds further suggested that wires should be buried in iron troughs, in trenches six feet deep, in the middle of the high roads, and if there was any fear of the communication being interfered with by any mischievous person or persons, two different routes should be chosen. Testing stations should be established along the route, and linemen stationed at these points ready to start out after faults at any moment, should there be a necessity for so doing. He recommended that offices should be opened all over the country, and evidently foresaw the immense advantages that would be derived by the government, as well as by the commercial world, in the employment of what he considered so "diligent a courier" as electricity.

Messrs. Cooke and Wheatstone took out their first patent in 1837, for "Improvements in giving signals and sounding alarms in distant places, by means of electric currents transmitted through metallic circuits." In this patent they included a plan for laying down subterranean wires, and in the same year established communication between Euston square station and Camden town, by means of five copper wires let into five grooves cut longitudinally in a piece of timber, the wires being covered with cotton and passed through a preparation of resin, and after being placed in the grooves, tongues of wood were placed over them to make all secure, and the whole was then covered with pitch and buried in the earth, up what is known by the railway men as "the incline," between the above-named points.

The second patent taken out by these pioneers included placing wires, made up into cables, in iron piping; this was in 1838. During the following year a line of five wires, in an iron tube, was put down on the Great Western Railway from Paddington to West Drayton, and afterwards on to Slough.

Conductors, covered with cotton and passed through different solutions, were tried in a variety of ways, some being suspended and others buried in pipes, but very great difficulties were experienced in preserving the dielectrics; weak places being traced would be repaired with India-rubber tape and a solution of the same material. This kind of work was being done near the Stepney station, on the Blackwall railway, when Mr. Hatcher—then engineer to the Electric Telegraph Company—introduced to the lineman a piece of lead tubing containing several wires covered as above.

The first line of wires erected upon poles for commercial purposes, was from Nine Elms to Gosport; this was before the London and South Western railway was extended from Nine Elms to Waterloo station. The Electric Telegraph Company opened its first office at 345 Strand, and decided to lay the wires underground from that point to Nine Elms station. Two lead tubes, about half an inch in diameter, covered with tarred yarn, each tube containing four copper wires wrapped with two layers of thick cotton, and the tube filled with a mixture of tar, resin and grease, were drawn into a three-inch cast-iron socket pipe. The lead tubes were originally fifty yards in length. After the wires had been joined, a piece of lead tube of larger gauge, encircling the pipe, was drawn over the joints and soldered at each end. A portion of this tube, recently dug up, was found to be in excellent condition, the tar being quite fresh.

In the year 1842, a specimen of gutta-percha was first introduced into England by Dr. W. Montgomery, but up to 1845 only a few hundredweights had been exported from Singapore. Since that date many thousands of miles of wire have been covered and buried beneath the surface of the earth, or submerged in the sea. The quantity of gutta-percha imported into London alone during the three years ended December 31, 1886, amounted to 6,700 tons. Messrs. Keene and Nickels received a small quantity of gutta-percha from Singapore during 1845, and this appears to have been the first imported into England. This firm ultimately sold their patent for processes in working gutta-percha to the Gutta-Percha Company, Wharf Road, City Road.

During the following two years Mr. Hancock took out patents for cutting, cleansing, and pressing gutta-percha through rollers; but no mention is made of covering telegraph wire in any patent up to the end of 1847.

To Professor Faraday credit has been given of having announced that gutta-percha was an excellent dielectric, and in the beginning of 1848 patents were taken out for covering wires with it. The first patent taken out in England for this purpose, so far as I can learn, was by Messrs. Barlow and Foster, the plan suggested being as follows: The wire was placed between two heated fillets of gutta-percha, and made to adhere by passing between two rollers In the same year Mr. John Lewis Ricardo, chairman of the Electric Telegraph Company, patented a machine with a pair of grooved rollers, through which the wires passed, placed parallel between the fillets, the action of the rollers being to bite nearly through the gutta-percha and allow of the several wires so covered being easily separated.

These early machines did not do their work with the same regularity as those in use at the present time, for it frequently happened that instead of the covering being smooth and uniform, it was found to be thicker at intervals—so much so, that it had to be pared down with a sharp knife.

The directors of the Electric Telegraph Company, having dis-

1. Paper read before the Society of Electricians and Telegraph Engineers, London, May 26, 1887.

Digitized by Google

covered that the Strand was not the best position for their chief office in London, resolved to build a central station at the end of Founders' court, Lothbury. This was formally opened on the 1st of January, 1848. From this office a circuitous line of three-inch cast-iron socket pipes was laid, chiefly under the footways.

When these pipes were first laid down, wires covered with cotton, passed through one of the preparations in use prior to the introduction of gutta-percha, were drawn into the pipes; but these wires were soon substituted by the wires covered with gutta-percha.

The first section of line in London into which gutta-percha covered wires were drawn was from Lothbury to Shoreditch, in 1849; and this was followed by the line to Euston and King's Cross. The wires that were first drawn in were covered with gutta-percha by one of the processes already described, and failed, owing to the gutta-percha seam opening longitudinally and exposing the conductor.

At this date a large number of experiments were made: wires of iron, brass, and copper were covered with gutta-percha; in some cases single wire, in others three wires, and as many as seven wires were enclosed in a solid core. Great improvements were rapidly introduced, and copper wire of No. 16 B. W. gauge was covered with solid gutta-percha of excellent quality, up to No. 1 and 8 gauge; and by August, 1854, no less than fifteen miles of pipes, containing 350 miles of wire insulated with gutta-percha, had been put into working order in London alone for the Electric Telegraph Company.

The pipes used by this company were of cast iron, three inches in diameter, and cast with a flat surface on one side, upon which were the initials E. T. C. Across Hyde Park the pipes were of earthenware, the joints being made with clay.

In 1850, the success of the Electric Telegraph Company induced some enterprising capitalists to form rival companies, one of which—the Submarine and European Telegraph Company—laid a line of six gutta-percha covered wires from London to Dover. This line was completed by the 1st of November, 1852. In 1853 the British Telegraph Company commenced burying six gutta-percha covered wires along the high roads from London to Liverpool, via Birmingham and Manchester, the latter place being reached by the 1st of March, 1854, and Liverpool during the same year.

The Magnetic Telegraph Company, in 1853, laid ten wires as far as Liverpool, and six wires between Liverpool and Portpatrick. Underground wires were also laid between Cork and Queenstown

These wires were buried in a wooden troughing of about three inches outside, with a groove about one inch square, having a lid of the same material; this was fastened down with nails after the wires had been placed in the troughing. The iron troughing was of about the same dimensions externally, but, of course, allowed more space for the wires inside; the lids were of iron.

When cast-iron pipes were used in towns, they were very similar to the iron troughing, being cast in two pieces; they were patented by both Mr. Reid and Mr. Henley, and are known as Reid's and Henley's split pipes The wires were in some instances laid in troughing without any protection beyond the gutta-percha, but in other cases they were protected by two layers of tarred yarn laid on in opposite directions. The whole of the stores appear to have been of the very best quality.

The underground line of the Electric Telegraph Company, laid along the side of the London and North Western Railway, from London to Manchester and Liverpool, was somewhat different from those just described. The pipes were of earthenware, the joints being made with clay. At intervals of fifty yards split earthenware pipes of larger diameter were fixed, to allow of the wires being drawn in. An iron wire was passed through the pipes as they were being put together, for the purpose of drawing the cables through.

From London to Watford four wires only were drawn in, but these had to be increased to eight, which number was continued on to Liverpool.

The work of constructing these different systems was finished by the beginning of 1855, and, after a very short life, in 1857–58 they were condemned, and wires on poles substituted. This applied to all the underground lines laid from London to the provinces in 1853.

When the greater portion of the wires were taken up in 1857 and 1858, a few sections were allowed to remain, especially in and near London. Portions of these lines have been recovered at different periods, in different localities, and under various circumstances. Some of the gutta-percha wires, that have been buried for more than thirty years, are now in first-class condition, but where this is the case they have been found wrapped in two layers of tarred yarn, and laid in iron casing or split pipes. The same cannot be said of that found in wood troughing, except under special surroundings. There is every reason to believe that the gutta-percha used to cover these wires was the real material, and was not subjected to anything akin to the so-called improvements in manufacture of late years.

Although the insulating material was good, yet there were many faults in the wire previous to its being buried. Probably owing to some fault in the machinery used for covering the wire, the copper wire got elongated and pressed in the form of a loop through the gum; many such places were discovered when the wires were recovered and examined.

The wire used by the Electric Telegraph Company on the London and North Western Railway, was covered with gutta-percha, and then each wire was served with tape. After this wire was delivered on the railway at Watford, it was passed through a bath of hot tar and sand; while the drums were moving at a regular pace, a serviceable jacket of tar and sand was given to the wire, but when anything happened to interrupt the continuity of this operation the portion left in the bath was exposed to a temperature sufficient to melt the gutta-percha, and the wire passed out covered with tape, tar, and sand only. Adequate care was not exercised in protecting the wire from the heat of the sun, it being allowed to remain lying on the banks of the railway uncovered for a considerable period, so that the copper wire got out of the centre, and in some cases became exposed altogether. After the cables had been put in place, the drawing-in holes at every fifty yards were left uncovered, and the ends of the wires left exposed, waiting for the jointers to come and make the permanent joints, and the split couplings to be put on.

The means adopted to preserve the wires were defective. Knowledge derived from a series of observations points to the fact that split pipes, whether of wood or iron, are not equal to the requirements of a subterranean line of telegraph wires. Wood troughing is subject to dry rot, and therefore various expedients have been resorted to with the view of preserving the timber; but some of these preservers act injuriously upon the wire, causing the insulation to be destroyed. When the line is placed near to trees, especially oak trees, the surrounding moisture is absorbed for a considerable distance; this applies to lines constructed of either wood or split iron pipes. Special circumstances may arise that would make it expedient to use wooden troughing, but where there is an absence of such special conditions solid cast-iron pipes are to be preferred. In London split pipes are a source of danger, for since the chief thoroughfares have been paved with wood or asphalt, the gas that escapes in considerable quantities from the gas companies' mains, accumulates under the surface and finds its way into these half-pipes, and thence into our junction boxes, causing much annoyance and inconvenience. I have known cases where the accumulation of gas, collected through split pipes, has been so great that it has been necessary to open the box some minutes before the jointer could light his lamp with safety.

Where earthenware pipes have been used instead of iron, it has been done for economical reasons only. Such a line was laid some years ago from opposite St George's Hospital, Knightsbridge, across Hyde Park, to Tyburn Gate, the joints being made with clay. Another section of the original line laid in 1851 between the site of the exhibition of that year and the Serpentine bridge was of earthenware. Some years ago the 16 wires that were drawn in when the line was laid, had to be drawn out to allow of the number being increased. Much difficulty was experienced in moving the old wires, and it became necessary to break one, and by laying it over the trench so to trace the locality of the obstacle; when this was done, and the ground opened, it was found that the root of a tree, about 10 feet long, had found its way through the clay with which the joints of the pipes were made, and had entwined itself round the cable in such a manner as to hold it fast. I need scarcely say that the gutta-percha had entirely perished at this point. Pipes of this description are always more liable to be damaged by the operations of the gas, water, or the hydraulic power companies' workmen when opening ground to get to their mains, than solid cast iron pipes.

Another, and I think the chief, cause of the rapid decay of the lines referred to, was the rapidity with which the work was carried out. All the companies were racing to get through to the provinces as soon as it was possible, and there is no doubt that this led to the work being done without the necessary supervision being given.

At the present time it is found necessary to place experienced men to watch the work as it proceeds, for where this has not been done the work has proved to have been unsatisfactorily carried out. When this is taken in connection with the fact that the majority of the men employed on these works were totally ignorant of the necessity of the greatest care being exercised, and the utter impossibility of the few able men to be everywhere along the works at the same time, it is not surprising that these early lines had to be so soon abandoned.

We now come to a very important epoch in connection with the telegraph systems of this country—the transfer of the telegraphs to the post office. This took place in the beginning of 1870, when all the different companies' lines were diverted to the central office of the Electric Telegraph Co. in Telegraph street, Moorgate street. This work was carried out under the direction of Mr. Henry Eaton, now the superintending engineer of the metropolitan district.

After the concentration had been effected it was soon discovered that nearly all the lines, with the exception of those in

Digitized by Google

solid cast iron socket pipes, were defective in insulation; and as the various methods of construction did not provide for renewals to be carried out without opening the ground, they were gradually abandoned, and the number of wires in the 3-inch cast iron socket pipes of the late Electric Telegraph Co. increased to meet the ever expanding requirements of the service.

Previous to the completion of the new post office in St. Martin's-le-grand, in 1874, the pipes and wires passing north, south, east, and west of the new building were led through the basement and up to the instrument gallery, where they were terminated upon a very extensive test-box, the terminals being numbered from 1 to 1,000.

The contemplated change from the office in Telegraph street having upset all the numbers in the joint-boxes in the streets, it was considered necessary to re-number the whole, and thus make the numbers in the boxes correspond with the new test-box. This was carried out so perfectly that the whole of the circuits were diverted to the new office in a very few hours on the night of January 17th, 1874, without the slightest interruption to the ordinary traffic.

At this date the length of pipes in the metropolitan district was about 100 miles, and the total quantity of wire in the pipes amounted to 3,000 miles. Shortly after this date an agitation was started against the over-house wires, and it was decided by the post office authorities that a new line of 3-inch cast-iron pipes should be laid down, and 100 miles of wire drawn into it, in substitution of 126 miles of over-house wire.

This was the first piece of work carried out in London with the view of reducing the over-house system belonging to the post office, and this was supplemented by many others, until the whole of the main lines of over-house wires had been removed.

The chief portion of this work was finished before the introduction of that marvellous little instrument the telephone, which must be held accountable for the dangers apprehended from the extraordinary network of wire suspended over the chief thoroughfares of the city, and, to a lesser extent, the suburbs of London. It has also had the effect of largely increasing the mileage of underground wire, for it was soon found that for a telephone to work satisfactorily underground, two wires must be used instead of one, and after may experiments it was found that much better results were obtained by the use of four-wire twisted cable covered with tape, two of the wires being used diagonally for the telephone circuit, thereby overcoming the effects of induction. Twenty of these four-wire cables, equal to 80 conductors, are now generally drawn into one 3-inch cast-iron pipe, some of which form part of the original lines laid down in 1847—40 years ago; and, judging from what I have seen when the wires have been drawn out for increasing, there is no reason to think they are likely to give any trouble for many years to come.

At the beginning of 1880 an experimental line of 1⅛ inch wrought-iron pipe and 30 No. 18 B. W. gauge copper wires, each covered with manilla, and the whole made up into a cable and covered with a braid of the same material, was laid for the post-master-general, under the direction of the patentee, Mr. David Brooks, of Philadelphia, the insulation being obtained by filling the pipe with oil after drawing in the cable.

After this line had been completed, the wires, with one or two exceptions, gave very good results as regards insulation, but from the first there was a very great loss of oil, and this continued more or less although every effort was made to trace and repair the leaks. Although the cost of construction and maintenance has been very heavy, it does appear to me that the system is worth a further trial under more favorable conditions—for instance, along a country road where it might form part of a through line, and where the pipes would not be subjected to such frequent disturbances as in the busy thoroughfares of London.

Several very large extensions to the boundary of the metropolitan district, and in some cases even beyond, as well as the enormous increase that has taken place in the supply of wires for private use, have increased the mileage since 1874 up to the present time from 100 miles of pipes and 3,000 miles of wire to 240 miles of pipes and 12,000 miles of wire, the latter being an average of 50 wires through the entire length of pipes. The total weight of copper buried in the metropolitan district amounts to over 200 tons, and that of gutta-percha to 250 tons.

It will be obvious that in the main thoroughfares near to the general post office the wires are very numerous. Through Little Britain there are two 3-inch pipes containing 109 wires; Aldersgate street, two pipes, 160 wires; Gresham street, two pipes, 150 wires; Cannon street, two pipes, 168 wires; Cheapside, two 3-inch, one 4-inch pipes, and 242 wires; Ludgate Hill, one 4-inch, three 3-inch pipes, 350 wires; and down Newgate street, two 4-inch, three 3-inch pipes, with over 400 wires. These numbers have been reached by gradual increments, the practice being to put into a new pipe as many wires as are actually required for the special service, with a small percentage of spare wires, and as soon as these have been appropriated for new circuits, to increase the number by drawing out the existing wires and replacing them by a cable with additional conductors. This class of work is continually being carried out in different parts of London to meet the great increase in telegraphic and telephonic business.

During the last fifteen years nearly every section of line has been disturbed, either for the purpose of removing faults which sometimes trouble us in or near the flush-boxes, through the necessarily frequent exposure of the gutta-percha to variations of temperature caused by the linemen getting new wires through, &c., or by the necessity of increasing the number of conductors as occasion may arise. So much of this work has been done that it would be difficult at the present time to point out any portion of line that has not been renewed during the above period.

The advantages of being able to replace the working wires by a greater number without seriously interrupting the communication must be evident to all; but this is easily accomplished where the lines are constructed of 3-inch cast-iron socket pipes with boxes either fixed flush with the pavement or buried beneath the surface at every fifty or one hundred yards, according to the size of the cable to be drawn in.

After many years' experience, and with a full knowledge of the many schemes that inventors have introduced from time to time, I do not know of any that can be compared with the present system for simplicity, utility and durability.

DISCUSSION.

Major-General Webber, R. E., pointed out that the practice of adulteration of gutta-percha was one result of the great demand for the material. The underground line between Lowestoft and the cable hut, which had now been down some 20 years, when last examined, was found to be in absolutely perfect condition—this being laid at a time when adulteration had not assumed the extent it had at present. In 1878 he went to Amsterdam to axamine some samples of gutta-percha; these, which were 15 in number, and varying in price from £10 to £20 per ton, were all found to be mixtures. He thought Mr. Fleetwood had hardly laid sufficient stress upon the fact that to the Electric and International Company was practically due the London system of underground work, this being laid under the direction of Mr. H. Eaton, Mr. R. S. Culley, and Mr. Ship. The secret of the success of the system was the power of drawing the wires in and out of the pipes. With regard to the aerial system of the United Telephone company, he thought that capitalists ought to recognize the fact that all the wires must eventually be placed underground, and that if they commenced at once to do this, doing a little each year, then eventually the whole system would be completed at an expense which would be little felt, and at a time when the use of aerial wires would be no longer tolerated.

Mr. A. J. S Adams thought that it would have been an advantage if Mr. Fleetwood had given a few more details concerning the durability of gutta-percha covered wires He considered that if the aerial trunk lines were properly built there would be no necessity for replacing them by underground work.

Mr. W. H. Preece thought that the object of the paper was not sufficiently appreciated. Mr. Fleetwood had given the result of his own personal experiences, and it was not to be expected, therefore, that he should have spoken of anything else. The underground work between Liverpool and Manchester, laid in 1870, had been spoken of; he would say with reference to this that it was still in use and was working properly, but the earthenware pipes, which had originally been used, had been mostly replaced by others of iron. One of the most promising systems of underground work was that being introduced by Mr. Eddison, of Messrs. Fowler & Co., Leeds; this consisted of cotton-covered wires bedded in a mixture of resin oil and other materials, and tightly enclosed in a lead pipe. Much had been said about the small amount of underground wire used in England as compared with that in other countries; but the facts were that in this country there were 25,000 miles of wire, which was 3,000 miles more than there were in Germany. There was now a proposal before Parliament to expend £2,000,000 in underground work, but it was doubtful if the amount would be authorized. It should not be forgotten that underground wires were four times as expensive as overhead wires and had only one-fourth the working capacity for fast-speed working. It was quite possible, however, that better and cheaper results might eventually be obtained. The use of secondary generators was likely to be very extensive, and the employment of these in connection with underground wires would have to be considered; such papers as that of Mr. Fleetwood went a considerable way towards assisting a solution of the question.

Mr. A. Siemens drew attention to the fact that in 1847 Dr. Siemens suggested the laying of an underground line insulated with gutta percha.

Mr. Eddison said that though the durability of lead had been questioned, he considered that this was groundless; he had a specimen of a lead-covered cable with him, which had been in a tunnel in Yorkshire for 32 years, and which was quite perfect in condition.

Mr. A. Bell said that one great fault in bitumen for insulation was its want of elasticity and the tendency to crack at low temperatures. In order to keep wires insulated with gutta-percha good the pipes ought to be thoroughly well jointed and to be deeply buried.

Digitized by Google

ELECTRIC LIGHTING FROM PRIMARY BATTERIES.

A NEW primary battery was exhibited this week by the New Electric Light Syndicate, limited, at 47 St. Mary Axe, London, E. C. The electrodes are zinc and iron or zinc and copper, the iron or copper electrode being covered with some depolarizing material. The exciting fluid is a caustic alkali. Originally this battery was made in the same shape as the well-known Lalande cell, the iron trough itself forming one of the electrodes. This was 18 inches by 10½ inches by 3 inches. The cell was tested by Dr. Walmsley, who reported favorably on it, and the following are some of the figures of this report: On an open circuit the E. M. F. was .75 volts. When the circuit was completed through a suitable resistance the E. M. F. fell to .69 volts, and the current was 3.45 amperes. After 50 hours' continuous run the current was still the same, but after 100 hours' continuous run it fell to 3.21 amperes, with a proportionate fall in the E. M. F., the external resistance having been kept constant all the time. After a total run of 150 hours the current was 2.27 amperes. The cells were not of the tray pattern, but ordinary cells in earthenware jars with vertical electrodes, which in this case were zinc and copper, the copper being coated with the depolarizer in the shape of an oxide of lead plate held in a bag of vegetable parchment. The solution is caustic soda. The inventor, Mr. Newton, claims that the vertical form gives better results as to constancy of current than the original pattern. Six of these cells were used to charge some E. P. S. accumulators, which in turn supplied the incandescent lamps fitted up to show that the battery is capable of being utilized for electric lighting. The crucial point in the system is the process by which the inventor hopes to recover all the zinc and about 95 per cent. of the caustic soda consumed. This process must for the present be kept secret, as the patent rights have not yet been fully secured. We are, therefore, unable to state its essential particulars, or to say whether it may reasonably be expected to prove successful in practice; but it must be evident that the inventor's claim of being able to light a house at a cost comparable with that of gas can only be substantiated if his process of recovering the materials is both easy and cheap. Until this has been publicly demonstrated it would be premature to form an opinion regarding the technical and commercial value of this battery.—*Industries.*

THE BURLINGTON BRAKE TESTS.

THE Brake Committee, of the Master Car Builders' Association, do not regard the recent brake tests at Burlington as conclusive enough to justify the recommendation of any particular brake for general adoption. They, however, regard two conclusions as indicated by the information derived from the recent tests.

1. That the best type of brake for long freight trains is one operated by air, and in which the valves are actuated by electricity.

2. That this type of brake possesses four distinct advantages.

(a). It stops the train in the shortest possible distance.

(b). It abolishes shocks and their attending damages to equipment.

(c). It releases instantaneously.

(d). It can be graduated perfectly.

The committee recommend further tests and investigation.

A HEAT BATTERY.

MR. J. A. KENDALL has devised a novel battery consisting essentially of two metal plates having a saline or vitrified substance called the "medium" between them. One plate is exposed to hydrogen, the other to heated air or oxygen. Platinum gives good results as the metal, but gold, palladium and iron may be used. Clay saturated with chloride of sodium or potassium, and firebrick permeated with vitreous matters, may be used for the medium. The cell is heated and the hydrogen traverses the medium, and is believed to combine with the oxygen or air. The electric current is drawn off by terminals connected to the plates as in an ordinary voltaic cell.—Glasgow *Engineer*.

CORRESPONDENCE.

NEW YORK AND VICINITY.

Subway Litigation.—The Subway Commission Bill Signed by Gov. Hill.—Fire at the Works of the United States Electric Light Company at Newark.—Success of the Electric Bulb.

THE New York Electric Lines Company keeps to the front in its persistent efforts to get a foothold in the streets.

Judge O'Gorman, of the Superior Court, heard argument last month in its suit against the Electric Subway Commissioners, the American Consolidated Conduit Company, John D. Crimmins, contractor, and the Consolidated Telegraph Company, upon a demurrer by the defendants. The Eiectric Lines Company claims that its charter, granted by the Legislature, gives it the sole right to construct electric subways in the streets of New York, and asks the court to restrain the defendants from proceeding with their work. The demurrer sets up forfeiture of its legal existence by the plaintiff company through failure to begin work within the time specified in its charter.

The Electric Lines company claims that the filing of its plans constituted a beginning of the work as meant in the charter. Judge O'Gorman reserved decision.

Gov. Hill has signed the New York Subway Commission Bill and filed with it a long memorandum. The memorandum accompanying the bill is as follows:

It is of the utmost importance that the electric wires in the city of New York should be placed underground as soon as possible. Every good citizen, having the best interest of the city at heart, is desirous of seeing this done. But if this bill is not approved, the methods and machinery partially provided by existing statutes for the accomplishment of the work will prove of no avail, and the removal of such wires is indefinitely postponed. There is only one objection to the bill of any consequence, and that relates to the failure to add two additional city officials as commisioners. The Mayor is added, and it would have been preferable if the Commissioner of Public Works and the Comptroller had also been included. Upon the bill coming into my hands, I respectfully requested that it be recalled for the purpose of making such amendments. But the Legislature, by a decisive vote, refused to do so. This was a mistake which I very greatly regret. The question is presented, however, Should this objection be permitted to destroy the rest of the bill? Public sentiment seems to favor the measure, notwithstanding this objection. * * * The people want the wires placed underground, and care but little who does it, provided it is well, and promptly, and satisfactorily done. They have no interests in the squabbles and complaints of disappointed contractors or patentees who want to do the work or to have their own particular patents used by whoever does it. The interests of private individuals should not stand in the way of a great public improvement desired by every one.

It is true that the local authorities have expressed their disapproval of the measure, but solely on account of the single objection aforesaid. Two political organizations have announced their opposition to it for divers reasons. The measure, however, is in no sense a a political one. While I have much respect for the local authorities and for those political organizations, and greatly regret to differ with their judgment upon this or any other matter, I cannot resist the conclusion that the best interests of New York will be subserved by the approval of this bill.

The lamp factory of the United States Electric Light Company, at Newark, was destroyed by fire on Friday, June 17th. The fire broke out in the laboratory, and spread rapidly through the entire building. Most of the building was occupied by the manufacture of carbon filaments and glass globes for incandescent lights. Owing to the inflammable nature of the contents of the works and the delay in sending out an alarm the whole structure was in flames when the engines arrived.

A second and third alarm was sent out on the arrival of chief Kierstead, and the entire department of the city was soon at the scene. It required, however, the hardest work on the part of the firemen to save the new main buildings.

The entire building in which the fire started, occupying about 230 feet on Orange street and 100 feet on Plane street, and the engine house, which is situated in the centre of the block, together with their contents, were entirely destroyed, the walls falling in about two hours after the fire started. The loss is estimated at $150,000, which is covered by insurance. One hundred and fifty hands are thrown out of employment by the fire.

The factory will be rebuilt as soon as possible, as these are the only works of the United States company in the country, and a large number of orders are on hand.

The Electric Club of this city has developed into so large a company of good fellows, as to require more commodious quarters than the cozy rooms hitherto occupied at the Hotel Dam. A

Digitized by Google

movement started a few weeks ago towards securing adequate permanent accommodation, has resulted in the leasing of a roomy house in East 22d street, near Broadway, and a committee is engaged in having it properly fitted up for the use of the club.

The Electric Club offers a most agreeable outlet for the convivial and gregarious instincts of the now numerous class of men interested in one way or another in electrical arts. Its scheme of membership is elastic enough to include those whose interests are on the commercial side of electricity, among whom are to be found a large proportion of the active spirits of the club.

May the companionability and the good dinners never grow less.

NEW YORK, June 21, 1887.

PHILADELPHIA.

Explosion in an Underground Conduit.—More Underground Privileges asked from Councils.—Illumination of Girard College Grounds by Electricity.—The New Jersey Southern Telephone Co. Sued by the American Bell Telephone Co.—Camden Streets to be Lighted by Gas Another Year.—The Penn Electric Light Co. Going Ahead with Underground Work.

ABOUT 5.30 o'clock on the afternoon of May 30 an explosion occurred in the conduit of the Phfladelphia Sectional Electric Underground Company, under Chestnut street, between Seventh and Ninth streets. There were three loud reports following each other in quick succession. The reports were accompanied by a shower of gravel and dirt, and volumes of dense smoke pouring from five openings in the pavement. The large iron covers on the man-holes at Seventh, Eighth and Ninth streets were hurled into the air, and the granite blocks of the street pavement immediately over the conduit for three blocks were loosened from their places. Although the sidewalks were crowded with people, no one was injured; but one of the large plate glass windows in Porter and Coates's publishing house at the Southwest corner of Ninth and Chestnut streets, was shattered, and several of the windows on the Ninth street side of the Continental Hotel were broken by the concussion. One of the man-hole plates at Seventh street was thrown nearly thirty feet in the air, and was shattered by the fall.

The superintendent of the company said the explosion was caused by an accumulation of illuminating gas in the conduit becoming ignited by a spark from an electric light wire on which the insulating covering was defective. It seems likely that defective gas mains are responsible for these explosions, and perhaps when somebody is seriously in jured, and the city compelled to pay heavy damages in consequence, the authorities may think it about time to rectify the matter.

This is not the only explosion that has occurred in these conduits. A workman got pretty badly hurt sometime ago from the same cause.

"I think," said Mr. Hart at a meeting of the electrical committee of councils held in select council chamber, during the consideration of an ordinance granting the Keystone Light and Power Company rights to lay underground conduits on certain streets, "that the city should construct its own conduits, and then rent them out to the different companies asking for privilege."

Chairman Graham was opposed to granting the privileges to the Keystone company. He said that there were several facts which the committee should take into consideration before granting them any privileges. He said that there were several suits against the company, which might make it impossible for them to carry on the work. He claimed that an injunction was being sought against the system they intended to use, and contended that if councils favor the ordinance and the company dig up the streets and then be enjoined from continuing with the work, it would place councils in a bad light.

"I would like to know what company intends to bring these suits?" asked Mr. Abrams.

"The Edison company," responded the chairman.

Mr. Boyer was in favor of the ordinance, because similar privileges had been granted to another company to use the same streets.

"And that company," said Mr. Abrams, "was the Edison." Their ordinance came before councils some weeks later than that of the Keystone company. This is not fair play. The Keystone company came first, and yet because we delay it, and pass a later one first, we are about to throw this one aside because of that fact. I shall oppose both the Edison and Keystone companies ordinances in councils, but I believe both should go before the chamber on a fair footing. We have already granted one company exclusive privileges, with the power of leasing their conduits, and I think that is enough.

After some further discussion, the ordinance was acted on favorably.

The ordinance supplementary to the Penn Electric Company's ordinance, requiring five miles of conduits to be laid in one year, was also favorably acted upon.

On the anniversary of the birth of Stephen Girard a few days since, the college grounds, which cover a vast area, were brilliantly illuminated with electric lights. Seven iron towers 125 feet high, were erected in different parts of the inclosure, and from the tops of these towers clusters of lights, five on each tower, shed their brilliancy over the grounds and the neighboring streets. The towers are located so as to illuminate the sidewalk around the high wall.

The New Jersey Southern Telephone Company, a concern recently organized, has been cited to appear before Judge Nixon, in the United States District Court at Trenton, July 4, for an alleged infringement of the Bell telephone patent. The company has brought its service into general use.

The Camden Gas Light Company has been awarded the contract for the ensuing year for the lighting of the public lamps of that city at $25 per lamp, and the Wheeler Reflector Light Company, of New York, the oil lamps at $20 each. The proposition from the Camden Electric Light Company was rejected on account of the additional expense that it would entail.

The Penn Underground Electric Light Company has given out a contract for the laying of five miles of conduit under Chestnut, Market, Arch, South, Second, Eighth and other streets, the work to be completed by the first day of September.

The *Ledger* in a recent issue says, editorially:—

"As long as electric lights are maintained by an overhead system of electrical conductors the plant must be considered temporary, if not experimental, and it would be unsafe to abandon gas lamps and trust entirely to electricity for street lighting under these conditions."

PHILADELPHIA, June 16, 1887.

BOSTON.

Failure of Legislative Regulation of Telephone Charges in Massachusetts.—Rumors of the Supreme Court Decisions on the Telephone Cases.—Output of Telephones.—The Erie Telephone Co.—The Boston Electric Club.—The Electric Light Association.—Electric Signaling at Fires.—Electric Light Notes.—Electric Lights in the Hoosac Tunnel.—The Government Telephone Suit.

THE telephone people breathe easier for another year, as the bill regulating rates in Massachusetts was defeated, after passing the third reading. The electric light people will probably have something of this kind to resist next year, for undoubtedly a bill will be introduced to regulate their affairs.

That the Bell telephone cases before the Supreme Court, at Washington, were not passed upon this last term is well-known. There was much disappointment among brokers and adventuresome gentlemen who had invested on margins for a "flyer." There has been a ridiculous and persistent effort on the part of some of our local papers to impress the community with the idea that the court had decided the case (and one paper was kind enough to give the names of the justices and their votes), against the Bell company.

The Bell Telephone Company's output of telephones for the month ended May 20, and for the year to date is as follows:

May—	1887.	1886.	Increase.
Gross output	5,256	4,555	701
Instruments returned	2,320	1,359	961
Net output	2,936	3,196	*260
Dec. 21 to May 20—			
Gross output	21,692	17,054	4,638
Instruments returned	9,576	8,046	1,470
Net output	12,176	9,008	3,168

*Decrease.

The annual report of the treasurer of the Erie Telephone Co., for the year ended March 31, 1887, shows operations of the Erie Telegraph & Telephone Co., as follows:

Earnings—		
Agency	$ 14,640.39	
Exchange	460,471.78	
Extra territorial and toll	58,984.12	
Messenger	683.72	
Miscellaneous	5,085.49	
Telegraph commission	752.79	
Total		$540,618.29
Expenses—		
General expense	$ 11,579.40	
Instrument rental	110,149.41	
Insurance and taxes	8,615.02	
Miscellaneous	14,754.09	
Operating	151,024.95	
Rent	10,301.92	
Reconstruction, repair and maintenance	54,119.28	
Total		$360,544.07
Net earnings		$180,074.22
Construction (total disbursements for the year)		33,167.13
Net earnings above all disbursements		$146,907.09
Number of subscribers added during the year		798
Total connected March 31, 1887		9,722

The statement of assets and liabilities March 31, 1887, is as follows: *Assets*—Licenses $2,342,965.97; plant $2,350,000; treasury stock $200,000; supplies on hand $25,009.12; suspense account $29,447.39; accounts receivable $42,182.96; new construction $447,028.23; cash $7,157.80; total $5,442,791.47. *Liabilities*—

Digitized by Google

Capital stock $5,000,000; accounts payable $4,850.79; reserve for contingencies $914.48; profit and loss $384,563.88; surplus $52,962.32; total $5,442,791.47.

From the net earnings of $146,907.09, above shown, dividends aggregating 2½ per cent. on the stock, or $120,000, were paid, leaving the balance to surplus account for the year of $26,907.09. The report certainly is a very favorable one. The company paid regular quarterly dividends of one-half of one per cent., and an extra dividend in December of one-half of one per cent., making 2½ per cent. for the year on the $4,800,000 stock issued. The net earnings of $146,907.09 were equal to three per cent. on the stock, and a balance of $2,907.09. This result, in face of the opposition in the southwestern territory of the company, is particularly gratifying.

Erie is selling at higher prices. Perpetual contracts with the parent company have not been made for all of its territory yet. Mr. F. P. Fish, counsel for the Bell company has been through Texas and other southern and western states in which the Erie operate, and enjoined infringers in a lively manner, hence the improved tone of the Erie stock.

Sixty gentlemen representing the various electrical interests of this city, met at No. 70 Kilby street, Saturday afternoon, June 11th, and voted to form a club to be named the Boston Electric Club. A committee was appointed to consider and report a plan of organization at a meeting to be held on Tuesday, June 21. The meeting on Saturday was presided over by Mr. J. Frank Morrison, president of the National Electric Light Association, who was in the city attending meetings of the executive committee of the National Association, which convenes at the Parker House, August 9.

A meeting of the executive committee of the National Electric Light Association was held in this city June 10th, the following named gentlemen being present: F. A. Gilbert, A. V. Garratt and Frank Ridlon, of Boston, M. M. M. Slattery, of Woburn, and Thomas McCoubray, Frank R. Colvin, P. O. Kielholtz and J. Frank Morrison, of Baltimore. It was voted to hold a convention at the Parker House, August 9.

The board of fire commissioners is soon to test a new electric apparatus on the fire engines of the department, which, if it performs the work claimed for it by the inventor, Mr. E. H. Crosby, a Boston newspaper man, will effect a great saving of time and expense, as well as damage from water at fires. The invention is a system of electric signaling, applied to the hose in such a manner that wherever the linemen may be, they are in instantaneous communication with the engineer in charge of the engine. The wires are laid inside each length of hose and the brass couplings of each length are furnished with automatic electric couplings, so that if a piece of hose is damaged another may be quickly put in its place without deranging the electric circuit. The apparatus is to be placed immediately upon one of the down town engines, and in a few days a public exhibition will be given. This is an old notion, and a good one; patents were issued many years ago for this purpose, but like many others, were ahead of the times.

The Newton Electric Light Co., have been exhibiting lights at Watertown, and have made propositions to light the streets of the town.

The electric light companies, in this section show great enterprise in extending their systems. Whenever or wherever possible they run a wire from some established plant to a benighted gas or kerosene lighted town, put up poles and lights in prominent places, make a point of "seeing" the selectmen, and moving spirits in the place, and light up for the benefit of the natives. An order for lights or for "samples" follows naturally. The time may come, when a company will send out teams, loaded with steam engines, dynamos and a complete small plant, after the manner of the lightning rod man, and scoop in a half dozen small communities before sundown.

A corps of men from the Westinghouse Electric Co., of Pittsburg, Pa., is attempting to light the Hoosac tunnel by electricity. There is a little over four miles of space to be covered, and the power is obtained, for the present, from water power at the Glen pulp mill. The framework upon which the electric lights hang is supported by wedges of bar iron driven into holes drilled in the sides of the rock. Incandescent lights are used, as arc lights are impracticable because of the dripping water. It will require at least 400 lights.

The annual meeting of the stockholders of the Franklin Telegraph Co., was held June 1st, when the following-named officers were elected for the ensuing year: Directors, C. A. Tinker, A. R. Brewer, Norvin Green, T. T. Eckert, F. L Ames, John Van Horne, Jay Gould, Thomas Roche and Joseph F. Greenough; treasurer, R. H. Rochester; secretary, Thomas Roche.

June 13th, the United States Circuit Court room was crowded by lawyers and others to hear the arguments on the defendants' demurrer to the plaintiff's bill in the celebrated case of The United States *vs.* The Bell Telephone Co. Judges Colt and Nelson occupied the bench. The United States was represented by ex-Senator Allan G. Thurman, Solicitor-General Goode, Jeff Chandler, Grosvenor P. Lowrey, of New York, and William C. Strawbridge, of Philadelphia, and the Bell company by Chauncey Smith, J. J. Storrow, Charles S. Whitman, George L. Roberts and E. N. Dickerson. The defendants claimed that the plaintiff's bill is multifarious in that it joins allegations and prayers for relief, in respect to patents Nos. 174,465 and 86,787. Mr. Storrow opened the case for the defendants, and reviewed the case at considerable length, occupying some three hours in his address.

Mr. G. P. Lowrey, commenced his argument in the afternoon, for the Government, but owing to the closeness of the atmosphere requested postponement until the next day.

On the 14th, Mr. Lowrey resumed his argument. He said that it was the plain duty of the Government to bring the suit. Both patents must stand or fall together. He claimed that the assignee company did not stand in any better position than the assignor, Bell, in regard to the sixth item of the demurrer, that the bill did not set forth any fraud in the procuring of the patents; did not specifically set forth what acts the complainant relied upon; nor when, how, from whom, or by what means complainant first had knowledge of each alleged fact. Specific allegations of fraud were certainly made that it was not necessary to enumerate at this stage of the argument. Perjury was charged in the procuring of the first patent in 1876, and that specifically. For the second application in 1877, Mr. Bell was charged with surreptitiously procuring information of the items of another application, by Mr. Dolbear, in order to amend his own application. There was no lack of specification in that instance.

Mr. Goode then proceeded to argue the right and power of the Government to prosecute and maintain the suit. He read the several divisions of the bill separating the public and private rights in the premises. The United States claims its right to bring the suit. The demurrer admitted that misrepresentations had been made to government officials; that the patents had been procured through these representations; that the patents were of great value and public utility; that vast sums were being received for their use; that no private parties had a right to bring suit against the patents; and that the Government was in a similar position. "Who is to prosecute a fraud if not the Government?" asked the counsel. "Are the doors of the courts to be closed to the Government?" He held that the Government had a right to enter its own courts in equity to find cause to cancel a grant procured by fraud or made by inadvertance or mistake. When the king made a concession through false suggestion, he had the prerogative of cancelation on information. Several cases were cited in support of this view. In English common law suits of this description could be brought by any subject in the name of the sovereign with the approval of the law officers of the Crown. Where the public interest is at stake, the attorney-general can always sue. Every state of the Union recognized the principle. Where the interest is merely private, the principle did not hold.

In answer to Mr. Storrow that the Circuit Court had already settled the question at issue by a decision, Mr. Goode contended that the question then decided did not cover the ground sought to be covered here. There was no difference between patents for land and patents for inventions when fraud came in. That had been decided by the Supreme Court of the United States, and the principle was long recognized. Mr. Goode wanted the court to understand that it was entirely relieved of responsibility by the decisions already pronounced. The commissioner of patents could not revoke the issues of his predecessor. He was not a judicial officer. Such questions belonged to the courts. The cases upon which the defendant relies to maintain his demurrer were simply on private issues. The United States here attacks a grievous monopoly, of which the people were the victims from one end of the republic to the other, and it was charged that this monopoly was the result of patents obtained surreptitiously. The only congressional nullification of the power of courts to vacate patents was in 1836, when the courts were denied the prerogative when suits for cancelation were brought by private parties. The common-law remedy always prevailed, and was never interfered with by any remedy that existed before that act. Mr. Storrow's claim that the Government had no common-law rights Mr. Goode urgently combated. How is it, he asked, that the Government had successfully instituted suits against lands when there were no statutory provisions in regard to them? The Government, of course, had property in the land. It was claimed that the Government had no property in an inventor's brain; but it did have a right to prescribe the validity and lease of that brain's product. It was the same right that it had to limit a soldier's bounty, whether in land or money, the settler's preempted grant, etc. The consideration was the bottom of it all, and if the consideration was falsely alleged, the contract was void; it was prejudicial to the public interest. It was absurd for the defendant to deny the United States the right to the cancelation of a patent by a court of equity on the ground of fraud proved. Fraud vitiated everything. There had been no laches, no delay on the part of the Government, and its case should be admitted. The Government was not a professed detective, roaming up and down the land. It always presumed sincerity of purpose until the contrary was made manifest. The validity of the patent was not attacked on any single allegation—the case rested upon the allegations as a whole.

Digitized by Google

June 14th, Mr. Goode closed his argument for the Government as follows: The time has not arrived to consider the issue on its merits. Much has been said by Mr. Storrow about previous litigation and the fact that the patents have been sustained by the lower courts. Those cases are now pending in the Supreme Court, but the Government is a stranger to them. There is no charge of fraud in those cases, which is the principal ground of action in this case.

Mr. Chauncey Smith, of counsel for the Bell Telephone Co. next spoke. The bill, he said, is brought by one department of the Government to undo what had been done by another department of the Government. Something has been said about the inherent power of the Government to institute this proceeding. I don't understand what is meant by "inherent powers." The Executive must find its authorization for its acts in the constitution or laws made under the constitution. Now, if the Government, or any one, from the President down, can't find his authority in the constitution, then he must find it in the law of Congress, for there is no other authority. But the Government in this case seeks to find its authority in the law of Great Britain. I deny that any such power can be found even in the statutes of that country. The power of the Crown to revoke an act of Parliament does not exist. The power to bring an action of this sort is specially delegated to the officers of the Crown. It would not exist without such authorization, and it is not claimed that any such authorization has been made by Congress in this country. Mr. Smith argued further that no allegation was made by the Government which would not be an adequate defense for any infringer of the Bell patents, and therefore the extraordinary proceedings which had been resorted to was quite unnecessary. The Government sets up that it brings this complaint in order to reinstate the people of the United States in their rights. But an invalid patent deprives nobody of any rights. Such a patent may be infringed with impunity.

The court room was crowded when Judge Thurman rose from his sofa and approached the counsel table to address the court. He said—My associates have argued this case so soundly, and it seems to me so conclusively, that anything I may say must be, to a certain extent, a repetition of their words. I have been urged as the dean of the faculty—by reason of years and not of learning—to address you briefly. The first and main question to be considered is as to the power of the Government to bring and to maintain this suit. The general power of the Government to bring such a suit is not denied, but the point the other side make is this, they maintain that this power cannot be executed without legislation by Congress to specify the officer and the mode by which the proceeding shall be set in motion. In the absence of such legislation they hold that the power is dormant and that the Government cannot use it. I don't deny that ingenious arguments can be made on the other side, but I maintain that it is not an open question and that it cannot be considered as an open question. Mr. Storrow claims that out of hundreds of thousands of patents issued only one has been set aside by such a proceeding as this. But of millions of land patents that have been granted hundreds have been set aside. There are very good reasons, only the Government has not been forward in bringing such suits as this—much stronger reasons than in the case of public lands. In most cases the defences raised by infringers of invalid patents are protection enough of the public interests. The Supreme Court has decided in the case of Whitney *vs.* Mowry, that no individual can file a bill to set aside a patent; that only the Government could do that. Does any one suppose that in the case of the Bell telephone that such bills would not have been filed long ago if individuals had the power to file them?

It is the duty of the executive to enforce the law. Mr. Smith argues that in that case it is the duty of the executive to proceed against infringers. That is ingenious, but I think if Mr. Smith will sleep on that proposition he will abandon it.

Mr. Dickerson, of New York, for the company, followed, combating the idea of the competence of the attorney-general to bring the suit. A bill that had been prepared by the Bell Telephone lawyers giving him that power in certain cases had been defeated. This was intended to compel a patentee to try his case, and not continue a doubtful patent in force. Every court in America and Europe, where the patent has been considered, had decided that Prof. Bell was the original inventor, but he had been subjected to such a fire of billingsgate and vituperation as no man had ever sustained before. The whole matter with the complainants was the assertion that the American Executive was the successor here of the British King in a royal prerogative. They wanted just enough of English law entered into this case to suit them—no more. Where was the rest of it? Spilled over from the Mayflower? The fact was, the power lay only in Congress—the people—and Congress had refused to act. The theory that the President was heir-at-law to the king was rather a peculiar view for such a good democrat as Senator Thurman to take. The attorney-general, it was well known, had been turned out of the Circuit Court in a patent case, and was now in the Supreme Court on appeal. This patent had survived the most malignant litigation ever known throughout the length and breadth of the country, and now this court was asked to pursue it to its death. Mr. Dickerson contended that every allegation of fraud in the bill came under the criminal statute.

The court took the case for decision.

BOSTON, June 18, 1887.

CHICAGO.

Telegraph and Telephone Property Destroyed by Fire at Pittsburg.—Mr. F. R. Welles in Paris.—Mr. Henry Bentley and Dr. Samuel Plush of Philadelphia in Chicago.—Success of Mr. E. S. Babcock, Jr., on the Pacific Coast.—Trade Notes, the Western Electric Co. and the Vandepoele Electric Manufacturing Co.—Telephone Exchange Notes.—Arc Lighting in Chicago.—Promising Start of the Chicago Electric Club.—An Electrical Journal in Chicago.—Electric Lighting on the River Front.

THE fire in the First National Bank building, Pittsburg, on the morning of th 10th instant, destroyed all the instruments and battery of the Western Union Telegraph Co., in their operating rooms on the top floors, and damaged the switch boards and destroyed the cables of the Central District and Printing Telegraph Co., who occupied the third floor. It is not known to a certainty how the fire originated, but it was first discovered under the Western Union switch-board, and it is supposed that rats, or other vermin, had eaten off the paraffine and cotton covering, leaving the bare wires in contact with woodwork. An alarm was sent in from two boxes and the fire department responded promptly, but as the flames were in the upper floors, which were surrounded by a labyrinth of line wires, the firemen were much hindered by having to cut their way to the building. There were eight to nine thousand cells of battery on the top floor, and these played an important part. In Pittsburg the almost obsolete practice of filling up battery cells with signal oil was followed, about eight barrels of it being used in the room, This oil of course caused the fire to burn more fiercely and rapidly, while the fluids from the broken batteries poured down the inside and outside of the building, staining everything a dirty yellow. The telegraph company immediately transferred their business, so far as possible, into the eight circuits of the Mutual Union, and ordered a carload of supplies expressed from New York. In four days they had all their wires working. But with the telephone company such promptness in resuming business was impossible, because outfits for telephone exchanges are made to order and cannot be had on very short notice. One of the eight sections of 2,000-wire multiple boards was ruined, and the other seven had to be taken apart and sent to Chicago for repairs. The work of repairing what can be repaired, and of making the new apparatus and cables, is going ahead as fast as possible in the shops of the Western Electric Co., but manager Metzger does not expect to have the service in order before some time in the early part of July.

The exchange at Pittsburg is the third large telephone exchange, we believe, that has been destroyed by fire, the others being Montreal and Toronto. After the burning of the Toronto exchange it was suggested by Mr. Angus Hibbard, then superintendent of the Wisconsin Telephone Co., that, in view of the delay in getting large switch-boards in emergencies, it would be a wise thing in the way of insurance, if a number of telephone companies should jointly buy a complete central office outfit, to go to the first place burned out. The plan was considered favorably by those to whose attention it was brought, but no action has ever been taken. It seems as though it would be worth while for telephone people to insure in some such way for prompt resumption of business.

There are two points in the newspaper comments on this fire worth noting: First, wholesale denunciation of the system of overhead wires—they must go—because in this case, as in so many others, beyond dispute, the work of the fire department was delayed and rendered additionally hazardous by that obstruction. Second, appreciation of telephone service when it stops. The *Dispatch* comments on the "embarrassments expressed in the probably 100,000 oaths that must have been frequently uttered when no response came to the yet larger number of "hellos" that were shouted against the diaphragms of the transmitters. All this, more than the dollars in property destroyed, is indicative of the damage done by the fire."

Mr. Metzger states that, although the company cannot be made responsible for the loss of time in the use of the telephone, as the fire was no fault of theirs, still they will allow their subscribers a rebate in proportion to the time the telephones are compelled to remain idle.

The many friends of Mr. F. R. Welles, who was for a number of years manager of the Western Electric Co., and is now residing in Antwerp, Belgium, will join in our congratulations to him upon his escape from the scene of a terrible disaster. He and his family have been visiting in Paris, and he writes to friends in Chicago that upon the very night of the fire at the Opera Comique his party had planned to go to that place of amusement, but their steps were fortunately turned elsewhere. Mr. Welles advises us of the death of M. Barbier, the celebrated

Digitized by Google

manufacturer of Leclanche batteries, who got a bad fright while visiting the ruins of the theatre the day after the fire, and was stricken down with an illness which ended in blood poisoning.

Mr. Henry Bentley and Dr. Plush, of the Bell Telephone Co. of Philadelphia, spent a few days in Chicago last week. They enjoyed the cool lake breezes while attending to the special object of their visit, that of looking into cable matters.

Mr. E. S. Babcock, Jr., formerly of Nashville, is making a great success of his work in California. He is president of the Coronado Beach Co., who own and manage the finest hotel on the Pacific slope. Mr. Babcock has recently closed a contract with the Mather Electric Co., for an outfit of 1,600 incandescent lights for the hotel *El Coronado*.

The Western Electric Co. are still running their factory nights, but manager Brown says they cannot quite keep up with the demands of their customers. It has been definitely decided to build a large wing from the south end of the building on Clinton street. They have recent large orders for 7,000 feet of Patterson cable for Kansas City and 5,000 feet for Montreal, electric light outfits for St. Louis and Red Cloud, Neb., and a multiple board, with a capacity of 2,400, for Memphis.

Chattanooga, Tenn., with 500 subscribers, has abandoned the Law for the magneto system. The Nebraska Telephone Co. has also made a sweeping change at Omaha, putting in a complete new outfit of Western Electric multiple boards and magnets call bells.

The Vandepoele Electric Manufacturing Co. are doing a business that they are very proud of. Their mammoth 250 h. p. generator at Montgomery is doing good work, and they are completing two 100 h. p. generators for the Scranton Suburban Railway Co., increasing the equipment of that road. They have also recently equipped a street railway at Lima, Ohio, with their apparatus.

Lightning arresters were well tested by a violent storm that passed over Illinois on the 7th instant. At Decatur the Central Union company had 400 wires destroyed in their exchange tower.

The Chicago Arc Light and Power Co., have increased their plant by purchasing from the Western Electric Co. the large central plant on Monroe street. They also have leased a part of a large building fronting some 600 feet upon Market and Washington streets and the Chicago river, which they will use as a central station for supplying about 2,500 lights in the business part of the city. Their engineer, C. F. Moeller, was instantly killed yesterday by a shock that he got while fixing the carbon of a lamp. He was drenched to the skin at the time, having been working on the roof in a pouring rain.

Last month we noticed the incorporation of the Chicago Electric Club. Since then meetings have been held once a week, and all necessary steps have been taken for effecting a permanent organization. General A. K. Stiles, of the Vandepoele company, is president. The vice-presidents are, C. A. Brown, of the Western Electric Co., J. P. Barrett, city electrician, B. E. Sunny, of the Chicago Telephone Co., and F. G. Beach, of the Central Union Telephone Co. F. S. Terry is treasurer, and W. A. Kreidler, secretary. Eighty enthusiastic members are already enrolled, 50 of whom sat down at the opening banquet held at the Grand Pacific hotel last Saturday, The dinner was a most enjoyable one, the boys being in excellent humor, as is evident from the fact that 35 informal speeches were made. The club is undoubtedly a success, and a committee are looking for permanent quarters.

The first issue of a weekly periodical called the *Western Electrician* is announced for appearance on the 2d of July. Mr. W. A. Kreidler, who for some five years has been associated with the *Electrical World*, is the leader in the new enterprise, and he has associated with him Mr. Wayland Clark, a gentleman of large experience in the general newspaper field. They propose to publish an independent newsy paper devoted exclusively to western electrical interests.

Mayor Roche has taken an active interest this month in the project of lighting the river, and has submitted to the city council the estimates of cost made by city electrician Barrett, together with his suggestions. Briefly stated, he proposes to control the movements of vessels through the city so as to avoid as far as possible interruptions of travel on the principal streets during business hours. With electric lamps fringing the banks of the river, the bridges could be kept closed during most of the day and open most of the night, which would greatly benefit the public and cause but little damage, if any, to the shipping interests. The cost of the plant is estimated at $47,750, and of operating it, about $7,300 per annum, which is about 43 per cent. less than it now costs to light the bridges by gas. Prof. Barrett has also been figuring on general city lighting, and his estimates are commanding a good deal of attention, and are very favorably commented upon by the daily papers. He says that 15 plants, costing $45,000 each, would light the whole city, that they would pay for themselves in two years, as compared with the cost of gas lighting, after which the city could be lighted at about 45 per cent. of the present cost.

CHICAGO, June 21st, 1887.

LETTERS TO THE EDITOR.

Notice to Correspondents.

We do not hold ourselves responsible for the opinions of our correspondents.
Anonymous communications cannot be noticed.
The Editor respectfully requests that all communications may be drawn up as briefly and as much to the point as possible.
In order to facilitate reference, correspondents, when referring to any letter previously inserted will oblige by mentioning the serial number of such letter, and of the page on which it appears.
Sketches and drawings for illustrations should be on separate pieces of paper.
All communications should be addressed EDITOR OF THE ELECTRICIAN AND ELECTRICAL ENGINEER, *115 Nassau Street, New York city.*

CAN SPEECH BE TRANSMITTED WITH THE BORED-BLOCK TRANSMITTER OF PHILIPP REIS?

AN OPEN LETTER TO PROF. EDWIN J. HOUSTON, OF PHILADELPHIA.

[70.]—In the *Journal of the Franklin Institute*, for January, 1887 (vol. cxxiii., No. 733), Prof. Edwin J. Houston, of Philadelphia, criticises my early experiments with the original Reis telephone (illustrated below), and seems to doubt the correctness and loyalty of my statements in favor of the Bell Telephone Co. against which at present suit is pending in America. Especially erroneous are the remarks about my arranging the experiments. To show the unfounded character of his comments, I address this open letter to Prof. Houston.

FRANKFORT-ON-THE-MAIN, May 25, 1887.

To Prof. Edwin J. Houston, Philadelphia:

Having returned from a prolonged journey, I find to-day the January number of the *Journal of the Franklin Institute*, containing your answer to my letters of July 21 and October 21, last, also a note upon an article published by me in the *Electrotechnische Rundschau*, No. 11, page 126, in the year 1886.

Your explanations based upon the letter of Mr. J. R. Paddock, in reference to the question whether the *first* models of the Reis telephone could be used for transmission of long sentences, clearly imply, that during my negative experiments, 26 years ago, in conjunction with Philipp Reis, as well as alone later, I did not understand the use of the apparatus, and that solely through "unpardonable ignorance" I made assertions which were recently overthrown by your friend, Mr. J. R. Paddock.

To prove your assertion you refer to the statement in my letter of Oct. 23 last, that the *platina-contact* was in the experiment somewhat separated from the *membrane*. You make much of this sentence, and assert that I made my prior experiments with *an open circuit*. I never did that. Had that been done though, as you would have your readers believe, no *singing* sound could ever have been transmitted. Such a nonsensical arrangement is against all common sense. The sentence in my letter to you of Oct. 23, was intended to mean that through the vibration of the membrane, while speaking or singing in the wood-cube, the *platina point* was lifted from the membrane and thus a transmission of sound through an interrupted circuit was made. This fact Mr. Paddock admits in his letter (page 59, *Journal of the Franklin Institute*, No. 727), in the words printed in italics:—"articulate speech can be transmitted in the Reis instrument when used with the *so-called broken current.*" Even if the expressions of my letter might give you the right to charge me with absurdity, the article in No. 11, of the *Electrotechnische Rundschau*, mentioned and attacked by you, should have shown you that I experimented exactly in

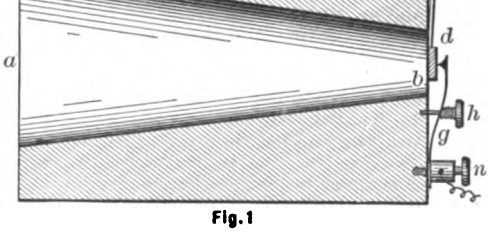

Fig. 1

the manner described by Mr. Paddock. In the article referred to (which was sent you Nov. 12, 1886); and in reference to the figure which you reproduce as figure 1 on "page 54, in your article in the *Journal of the Franklin Institute*, occurs the following sentence: "When speaking into the cube at *a*, broken currents are formed at *d*, through the vibrating of the membrane *b*, with very short intervals, and there is a small spark due to the perfectly broken currents. It is unnecessary to state that sound vibrations of the character required for the formation

Digitized by Google

of articulate speech cannot be produced by such broken currents, as the fact is sufficiently proven." My expression, "broken currents are formed" should prove to you that I did not attempt to work through a broken circuit, but used a closed circuit at the beginning of my experiments.

Your unkind attack upon me in the *Journal of the Franklin Institute* falls back upon yourself. From the above citation you must have seen, that like Reis himself I experimented with a closed circuit. Nevertheless neither Philipp Reis himself nor I, nor any other German experimenter, has ever been able to converse with a Reis bored-block transmitter and a Reis knitting-needle receiver as is claimed to have been done by Mr. Paddock. Properly, I should not permit myself to contend further with you, since with a model the same as the Reis instrument in your hands a long while before the publication of Mr. Paddock's letter, you held a perfectly uninterrupted and intelligible conversation of from five to six minutes, during which questions and answers were sent and received; but permit me the question, why you did not mention your *own grand success* in your letter of Oct. 1st, 1886, addressed to me (far different from an open publication) while now espousing the cause of Mr. Paddock and indirectly defending the Overland Telephone Co. From the sentence of your article—"Although the author has not personally repeated the experiments of Mr. Paddock with the original apparatus of Reis, yet he is disposed to give full credence to the statements of Mr. Paddock, because he (the author) had, prior to the publication of Mr. Paddock's letter, held an almost uninterrupted and quite intelligible conversation, continuing for some five or six minutes, in which questions and answers were given and received, by the use of a transmitter, which was an exact reproduction of the Reis bored-block transmitter, and employed the platinum contacts found on the Reis apparatus; and also because he does not see any essential structural differences between this form of transmitter and that in extensive commercial use to-day by the Bell Telephone Co." It is plain, assuming the correctness of the statements, that while using a Reis transmitter, you MUST have used a *Bell Telephone* RECEIVER. You can not well venture to deny this fact, although you ignore it in your article.—How is it, moreover, that in February, 1886, as he asserts, Mr. Paddock could plainly telephone with the simple Reis apparatus and with the broken current this long sentence, "William H. Vanderbilt died suddenly at his house on Fifth avenue yesterday. He is said to have been worth two hundred million of dollars," and that in November, 1886, he reached merely the carefully tabulated results given in your article under reply, page 55, and found that it was possible only to register "*examples* of words?" Why does the broken current suddenly change to a current "of undulations, interruption and breaks?" Very remarkable this; but more remarkable is the story of Mr. Paddock, which you, a scientific physicist, adopt, that he obtained the required tension of the membrane in the wood-cube telephone of Reis through the action of *sunlight*. What an imputation is involved in producing such scientific nonsense before the physicists of the whole world. Do not the two gentlemen know, that every animal membrane is very hygroscopic, and that in speaking against such a membrane the moisture of the breath is absorbed, and the membrane must loose its tension, even though Mr. Paddock let the sun shine in his mouth while using the apparatus. How is it that this contrivance was not necessary in the month of February, when the long sentence about Vanderbilt's death could be heard with a Reis knitting needle and a broken current? How is it, that in your criticism of my communication you suppressed the fact, that Mr. Paddock changed the Reis apparatus and did not experiment on the basis of the mode of the inventor, Ph. Reis,—as the only point was, to show that spoken words could be transmitted with the Reis bored-block transmitter *before* the invention of the Bell telephone?

I will in your favor and to your honor believe, that you had no knowledge of the changes which I made on the original bored-block telephone, which went to the United States through the agency of Prof. Silvanus P. Thompson, of London. In the printed documents which I have of the appeal in the Supreme Court of the United States, Oct. 1886, of the suit of the Overland Telephone Co., *et al*, against the American Bell Telephone Co., *et al*, Act. No. 1.—1. 1493,—there appears a confession of Mr. Paddock, made at his second hearing, Oct. 15th, 1885, that he had made fundamental changes of extraordinary importance in the original dispositions made by Philipp Reis, which he witheld in the first hearing although severely cross-examined. The assertion of Mr. Paddock, that it must always have been possible to speak with the Reis telephone, is not trustworthy, as may be seen from the circumstance, that he misstates in citing from the *Industrie-Zeitung*, which was published in 1863, in Chemnitz. In it was published the report of Mr. J. F. Quilling, of Frankfort-on-the-Main, in which he describes the construction of the Reis telephone:—"It was impossible with the apparatus as then constructed to transmit spoken words." This sentence which appears in the middle of Mr. Quilling's article, Mr. Paddock omitted (Overland Case 1—1. 1491).

It is therefore clearly proven, my dear Prof. Houston:—

1st. That I myself have experimented exactly in the same sense as my deceased friend, Philipp Reis, instead of working, as you *mala fide* impute, with an open circuit.

2d. That spoken words never could be transmitted by telephones of the kind under discussion.

3d. That Mr. Paddock, if it is true that he transmitted words with the above mentioned apparatus, changed the apparatus to conform with later telephone inventions.

At the close of your attack upon me, you express your *great surprise* that your statements and those of Mr. Paddock are doubted not only by the legitimate friends of Mr. Bell, but also in Germany. I answer to this that the first principle of German science is *truth*. We are satisfied that Philipp Reis was the first, who practically TRIED to transmit sounds and words to certain distances through a physical apparatus and the electrical current, but, that Bell alone has the undisputable right to assert that he invented the first *useful* apparatus for the practical far-speaking telephone; also, that the Bell Magneto Telephone is in *no way* identified with the construction of the Reis transmitter.

All this you have read in the *Electrotechnische Rundschau* (which is edited by myself), No. 11 1886, page 126 to 129. You admit in the paper under reply that you had read the article, but you ignore the contents entirely. You fail to mention even the number of the paper in which all the above assertions are stated and fortified; but that is certainly the easiest way to get rid of a scientific opponent. For us Germans it has long ago been proven, that the honor is due to the German electrician, Philipp Reis, of having first invented an apparatus which he called telephone for the purpose of transmitting sounds and words. However pleasing it may be to us, whatever the motives may be, that foreigners are so desirous of putting the merits of our Reis in the proper light, we are all the more in duty bound to save the memory of our friend from stain, and to treat exaggeration in the same manner as the deceased, who, if he were alive, would certainly repulse it.

May the scientific world of the United States learn through this letter, which I send as an *open* one, what is known in Germany of the capacities of the Reis apparatus, before the praiseworthy and magnificent invention of Prof. Graham Bell; and also in what manner Prof. Edwin J. Houston tried to use their scientific weapons.

DR. THEO. STEIN,
President Society of Electricians.

NOTE.

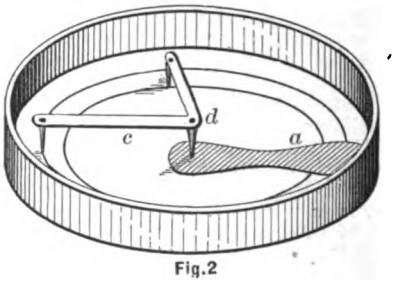

Fig.2

To prevent wrong impressions, I call attention to the fact, that my statement has reference exclusively to the first constructed telephone instrument invented by Philipp Reis. With the later the cube box transmitter, *single articulated words* could sometimes be transmitted. This happened when the speaking into the cube box was not too *loud*, in which case, sometimes, the needle lying on the metal peg, by the vibration of the membrane with the platina stripe *a*, figure 2, would not be entirely removed from the platina plate. If by the vibration of the membrane, there are no actual breaks in the circuit, the very feeble vibration of the membrane not lifting the contact entirely, there exist, as is known, undulating currents, which are essential for the transmission of articulate speech. Now and then this physical law comes into action through pressure of the peg *d* forwards, through which, but always accidentally, spoken words could be sometimes transmitted with this apparatus even 25 years ago. These facts were published in 1885, in the Paris publication *Lumiere Electrique*, vol. 16, page 583. T. S.

PATENT OFFICE EXAMINATIONS FROM AN AMERICAN POINT OF VIEW.

[71.]—Letter No. 69, page 235, of your June issue, certainly "strikes me like a clap of thunder in a clear sky." Such wholesale and ruthless condemnation is more often the result of prejudice than judgment, and if many people in this country think with the writer thereof, the sooner some intelligent missionary work is undertaken, the better.

The statement that actions of the Patent Office upon applications presented amount to nothing for the reason that they are

Digitized by Google

not conclusive upon the courts, is very insufficient proof that no patent is worth anything until it has at least been once considered by a United States court, and simply indicates that it would be absurd to set up the ministerial acts of the officers of a bureau of the government against the law of the land as judicially interpreted. It is an incontestible fact, nevertheless, that the actions, theories, and decisions of the Patent Office are very carefully considered in the decision by the courts of infringement suits, as also are the statements and admissions made by the inventor during the prosecution of his application.

A person used to European patent practice, and attempting to conduct applications before the United States Patent Office, would very soon get himself in a corner, and then naturally feel that the American system was all wrong. I do not really think that anybody but an Englishman, or a person familiar only with European patents, would contend that no United States patent is worth anything unless consecrated by a judicial decision.

Millions of dollars are to-day safely and profitably invested in patent property about the validity and merit of which there never has been, nor will there ever be, any contest or dispute. The instances of contest are the exceptions, not the rule.

Patent law more nearly approaches an exact science than any other department of the law, and it is not a matter of chance who wins a suit upon a good patent. It is too often the mistakes resulting from reckless and incompetent soliciting that cause trouble.

Many royalties are paid to-day as the result of searches made with a view to breaking down patents, but which only resulted in sustaining the action of the Patent Office. Would-be infringers, finding a profit in the manufacture of some patented article, and finding also, that the patent having been carefully prepared and no anticipation thereof having been found, there was no way in which they could overthrow or defeat the patent, have concluded they had better make terms with the owners and keep heir heads out of the lion's mouth, rather than risk the expense of a suit for infringement.

When would-be owners of patents actually "get it through their hair" that the Patent Office is not responsible for the results of its decisions, and that the value of a patent depends altogether upon the skill, honesty, and industry of the attorney *and* his client, they will then see that their own plain unmistakable duty is to ascertain the fighting strength of a patent before investing, when they will be less liable to incur future loss.

It is nonsense to say that none of the proceedings in the Patent Office are recognized in the courts. Has a patent ever been overthrown on the ground that it was granted to the wrong party as the victor in a contested interference proceeding? Then again, the suggestion of "money-bags, bribery, corruption, favoritism, and general rascality" is really carrying the joke a step too far. I have practiced before the Patent Office for seven years, and have prosecuted cases in every branch, and every division, and (never having been in the employ of the department) I take pleasure in saying that I do not believe a more honest, efficient, and faithful corps of public servants exists under any government. Is is *their* business to stand between the inventor who claims everything, and the public, which certainly has some rights; that is what they are there for, and it is the business of the *attorney* to mediate between the actions of the examiner and the claims of the inventor, and if he is competent and does his work properly, the chances are that 99 times out of 100 the patentee will secure claims covering all the ground to which he is really entitled.

The American patent system is superior to that of any other country in several particulars, for instance, it examines all applications; the result of which is that far more than is generally supposed to exist is shown, every word of which becomes a permanent record always accessible to the public. It insists upon a correspondence between the description and the drawings, and a precise use of language far in advance of the requirements of the patent laws of any other country. It refuses to tolerate or permit ambiguity of language of any kind whatever (a favorite trick under the English practice). It refuses to permit such alternative propositions as would involve more than can be gathered from the application as a whole. And last, it prescribes certain formulæ for claims, which, if carefully considered, will leave no doubt whatever in the mind of the person interested as to what the patent covers. The net result of all this is, that an intelligent and conscientious lawyer upon study of the claims can say, and with reasonable accuracy, what an American patent does or does not cover; whereas, with all European patents it is wholly a question for the courts, and no one can have any kind of certainty as to the result until after the expense and delay of an infringement suit has been incurred.

As nearly every inventor claims everything, if patents are granted for everything to every inventor one of two results happens; capitalists say, "we will have nothing to do with any of your patents until you have litigated the matter among yourselves for you all claim more than you are entitled to" (the effect of which is to shut out poor inventors); or innocent third persons reading the patent are imposed upon by their reverence for the great seal.

The claims of United States patents are restricted, so that when references have been produced, showing them to be too broad, any man with reasonable powers of comprehension who has the gumption to look into them can see what is not covered thereby. A patent comprising broad claims on a desirable improvement is always certain of attention, and in this country much more often means a paying interest in a good business than a hopeless struggle against wealthy infringers, as abroad.

From an American point of view our patent system has done more than any other one thing to develop the possibilities of this country, and is to be cordially recommended to the consideration and support of those most interested, as the best so far developed.

FRANKLAND JANNUS.

Washington, D. C., June 15th, 1887.

THE WIRE GAUGE PROPOSED BY THE NATIONAL ELECTRIC LIGHT ASSOCIATION.

[72.] The adoption of metric measurement for wires and sheet metals may be desirable, but it is doubtful if the gauge suggested to the National Electric Light Association will prove to be the right thing. That gauge is open to the objection that it reverses the accustomed order of sequence from large to small sizes, and will thus be confusing to the mind—at least in its introduction. Then the differences between the successive numbers are too small in the large sizes, and too large in the small sizes.

For instance, No. 1 would be 10-100 of a millimeter, or 4 mils, No. 2 would be 20-100 (8 mils), and No. 3 30-100 (12 mils). The jump from 10 to 20 hundredths (4 to 8 mils), and from 20 to 30, (8 to 12 mils), is much too great. For these three numbers of the proposed gauge there are ten numbers of the B. & S. gauge, and they are all needed. The proposed gauge, therefore, could not be used for these small sizes, which must be designated by the numbers of some other gauge, or else by decimals of an inch or of a millimeter.

In the large sizes, on the other hand, there is no need for so many numbers. From 4 to 6 mm., for instance, the gauge offers 20 numbers, against 4 in the B. & S. gauge. From 6 to 8 mm. there are 20 numbers again, to only 3 of the B. & S. gauge, which may, perhaps, have too few numbers in those large sizes for some purposes; but so great an increase is certainly needless.

If we must have a gauge of some sort, it would seem that its principle of construction should be that of increasing differences between the successive sizes, in passing from small to large. A mere arithmetical progression leads to the defects noted above, and the making of a gauge without any apparent guiding principle at all, leads to the anomalies observed in the Birmingham, Old English, Standard British, and, in fact, in all the ordinary gauges except the B. & S.

In view of the failure of so many attempts at gauge-making, and in view of the general desire for something better than any known gauge, why not do like the rest of the world, and designate sizes *by sizes?*

A true word was said long ago by Miller, Metcalf & Parkin, (quoted in the "Memorandum on Gauges," in Brown & Sharp's small catalogue): "There is a very simple and easy way out of the whole snarl, and that is to abandon fixed gauges and numbers altogether." That is what other people do, or are coming to do. The English are more and more getting into the way of reckoning by mils, and the rest of the world, outside of the United States, has pretty generally adopted the metric system.

The gauge proposed to the Electric Light Association is the one adopted by the German manufacturers some years ago. (See letter from Felten & Guilleaume, *Electrical World*, Oct. 2, 1886.) So far as I can learn, however, this gauge is not in common use by the Germans at present. I have never seen it mentioned in any German book or catalogue or price list. Although I have been doing business with Germany for years, buying and selling, I have never seen the numbers of this gauge referred to in correspondence, nor heard them mentioned by Germans in conversation. They always talk and write millimeters, and buy and sell by millimeters, just the same as other Europeans.

Here you have, therefore, an attempt to introduce this identical gauge, the result being the adoption of millimeter measurement, pure and simple.

The name proposed for the gauge is also objectionable. "National Standard Electric Wire Gauge" is neither true nor appropriate nor convenient. It is inconvenient, because too long; inappropriate, because it conveys no idea of the system on which the gauge is based; and untrue, because the gauge is in no sense "national." It was German once, and is founded on a system French in origin but now international and world-wide. "Metric Gauge" is a name conveniently short, appropriate and true.

But as gauges have failed to meet the demand in America, and have been abandoned by the greater part of the world, would it not seem that their day is past, and that the thing to do is to adopt measurement by definite values?

Admitting this, the question is which to take, mils or millimeters. The mil has the advantage of being understood by everybody, and of being already in use to some extent. Beyond this,

Digitized by Google

all the advantage lies with the millimeter, for the following reasons:

1. It is the basis of all electrical units.
2. It is already in use by the whole scientific world.
3. It is used by the greater part of the world of business.
4. It is better and more convenient than the mil.

Reasons first and second are well-known facts, while the third seems not to have been fully appreciated, but is none the less true. Nearly all Continental Europe uses the metric system; so also the whole American Continent south of the United States boundary. In designating sizes of wire and sheet metals, however, the English system stubbornly disputed the ground, being in prior possession, and held its place in some countries for many years, but has now nearly disappeared from all countries whose language of trade is not English.

Metric measurement has thus made steady progress in the world at large, displacing local and inferior systems. It may be hopeless to try to bring the kilo and the meter into general use in the United States, but the adoption of the millimeter for measuring wires and sheet metals would have the advantage of bringing the country into line with modern progress in this one respect, and of assimilating American trade usage to that of the greater part of the business world.

As to the relative convenience of the inch and the millimeter, it is to be noted that the mil, or thousandth part of an inch, is not small enough for the thinnest wires and sheets, while it is too small for the thicker sizes. For very fine wires, such as No. 38, B. & S. gauge (4 mils, 10-100 mm.), the unit of measurement should be small enough not to require a sub-division to express any size required, and yet not so very small as to lead to a needless multiplicity of numbers. The mil does not fulfill this condition, for it must often be halved to express a required size. The hundredth of a millimeter, however, fills the bill perfectly. The successive sizes, 7, 8, 9, 10, 11 hundredths, etc., are all needed, and yet the differences are as minute as can well be measured for trade purposes; or at any rate if we can measure more closely we cannot draw wire more closely, and even for this degree of accuracy we must use diamond dies.

Passing to larger sizes we find the mil too small and leading to too many numbers, while the millimeter is about right. The near equivalents of the ordinary sizes of telegraph wire are as follows: No. 4, 6¼ mm.; No. 6, 5¼ mm.; No. 8, 4¼ mm.; No. 9, 3¾ mm.; No. 10, 3½ mm.; No. 12, 2¾ mm.; No. 14, 2¼ mm. The sizes vary at first by just 1 mm., and then by ½ mm. It would cause no inconvenience to change these current sizes to 6, 5, 4, 3½, 3, 2½ and 2 mm. (The standard size in Europe is 4 mm.)

Again, in the smaller copper wires (using now the B. & S. gauge), the current sizes and their near equivalents are: No. 12, 2 mm.; No. 14, 1½ mm.; No. 16, 1¼ mm.; No. 18, 1 mm.; No. 20, ¾ mm.; No. 22, ⅝ mm.; No. 24, ½ mm. The sizes differ generally by quarter millimeters, and there would be no inconvenience in going by quarters above 1 mm., and by tenths below 1 mm.

Let us compare these results with the mils representing the same sizes; Taking the telegraph wires we should have 243, 207, 169, 152, 138, 112 and 86 mils, and for the B. & S. gauge sizes mentioned, we should have 80, 64, 50, 40, 32 and 25 mils. Now if mils are adopted it will be impossible to hold purchasers to the standard sizes. Some one will order 250 instead of 243, or 200 instead of 207, or 80 instead of 64, or 30 instead of 32, and so on. Keeping stock of standard sizes will become very difficult.

All the arguments, therefore, favor the millimeter, except one—that of familiarity and habit—and yet this one may possibly outweigh all the rest. Unless you can bring into actual and general use the system chosen, all your resolutions of "adoption" might as well be thrown to the winds. (Witness the failure to introduce the new British gauge.)

The millimeter is infinitely preferable to the mil, as the kilo and gramme to pounds and ounces, the kilometer, meter, and centimeter to the mile, foot and inch, and the dollar to the pound sterling or rupee—or even to the franc, mark or florin.

But habit and custom—there's the trouble.

"Custom lies upon us with a weight
Heavy as lead and deep almost as fate."

Antwerp, June 10th, 1887. F. R. WELLES.

LITERATURE.

A PRIMER EXTRAORDINARY.

After Senhor Pedro Carolino's New Guide of the Conversation in Portuguese and English, we have seen nothing much funnier than the Electric Light Primer, of Charles L. Levéy, recently issued in New York, and to be had at 61 Broadway for half a dollar. Its sub-title is: "A Simple and Comprehensive Digest of of All the Most Important Facts Connected with the Running of the Dynamo and Electric Lights, with Precautions for Safety, etc. For the Use of Persons whose Duty it is to Look After the Plant."

A few selections from its pages will illustrate our meaning and justify our amusement better than any description.

In the preface the author says:—"In the hope of giving, in the most concise form, an insight into the workings of electric lights, both arc and incandescent, the author proposes to write a species of *Primer on Electricity*, divested of all complicated mathematical calculations, without touching on technical terms (save in explanation).

"The object of this work is to instruct those whose duty it is to attend to the running of dynamos, and to guard against some of the mishaps that are liable to arise. These few hints may be of considerable benefit, as this duty usually falls to the lot of the engineer (and being a man of good common sense), to such this work will, I hope, prove most valuable."

The following extracts are from the body of the work.

ELECTRO-MOTIVE FORCE.

"Electro-motive force expresses in electricity what steam in a boiler does to an engine, but as no circuit or work can be obtained without resistance, then we conclude that much E. M. F. is wasted in overcoming this resistance.

DYNAMO FIELD MAGNETS.

"Field magnets are made of soft cast or wrought iron, on which is wound a quantity of insulated copper wire. These fields become highly magnetized by the rotating of the armature, which is so connected to them as to generate a great current in the neighborhood of these magnets.

ARMATURE.

"Armature is that part of the dynamo machine which is attached to the spindle, but perfectly insulated therefrom. It is of suitable discs, made up in parts, surrounded with copper wire, and rotates in close proximity to the fields or pole pieces.

COMMUTATOR.

"Commutator is that part of the machine which is also attached to the spindle, but perfectly insulated therefrom. It is a copper ring made up in as many pieces as are bobbins on the armature, and each section is thoroughly insulated from the other.

BOBBIN.

"A coil of wire, or a number of coils, mounted so as they can be rapidly revolved.

INSULATION.

"Any substance, non-metallic, can be used for insulation, from paper up. It is the fact that no metal contact exists, and the various substances must be judged according to the work to be done.

AMMETER.

"Ampere meter is an instrument for measuring the current in amperes. By its use (if in circuit) it will instantly show the condition of the current.

VOLTMETER.

"Voltmeter is about the same, but gives the measurement in volts or E. M. F. Every installation should have these two instruments. Without them the party in charge is in the dark, however brilliant the light may be. If a breakdown occurs he is often unable to detect the cause.

EARTH.

"The return of any telegraph circuit: but in electric lighting a second or return wire is used, which is often called earth.

SHORT CIRCUIT.

"Short circuit means that the current takes the shortest path, and having no work to do causes fire. Moisture will cause a S. C. This will generally burn up the dynamo.

The necessity of good joints and entire absence of moisture is strongly urged. Moisture leads to loss of current, and to the destruction of the conductor, and the injudicious use of earth.

SPEED INDICATORS.

"Of these there are various makes, but the best are those that will denote the exact speed that the dynamo is rotating at."

Perhaps we can make no better comment on this remarkable manual than by quoting the following from Mr. Levéy's general directions.

"The difficulties that beset the engineer are chiefly internal and invisible, and they can only be effectually guarded against by testing or probing."

RECENT PUBLICATIONS.

Cumming, Linnæus, M. A. Electricity Treated Experimentally. For the Use of Schools and Students. London: *Rivingtons*. New York: *D. Van Nostrand*, 1886. 16mo., 389 pp.

De Cew, Glacer. Magneto and Dynamo-Electric Machines, with a Description of Electric Accumulators. A Practical Hand-Book. Translated from the German by F. Krohn. Second Edition, enlarged with a Preface and an additional chapter on the Latest Types of Machines, by W. B. Esson. London: *Whittaker & Co.* New York: *D. Van Nostrand*, 1887. 12mo., 311 pp.

Frolich, L. Dr. O. La Machine Dynamo-Electrique Exposé Théorique Calculs, Applications Pratiques, traduit de l' Allemand par E. Boistel, avec 64, Figures dans le Texte. Paris: *Baudry et Cie.* 8vo., 262 pp.

Holmes, A. Bromley. Practical Electric Lighting, Third Edition. London and New York: *E. & F. N. Spon*, 1887. 12mo., 183 pp. Illustrated.

Digitized by Google

Plante, Gaston. The Storage of Electrical Energy and Researches in the Effects Created by Currents Combining Quantity with High Tension. Translated from the French by Paul Bedford Elwell. London: *Whittaker & Co.* New York: *D. Van Nostrand*, 1887. 8vo., 268 pp. Illustrated.

Stewart, Balfour, and Gee, W. W. Haldane. Lessons in Elementary Practical Physics. Vol. II.—Electricity and Magnetism. London and New York: *Macmillan & Co.*, 1887. Crown 8vo., 497 pp. Illustrated.

CATALOGUES AND PAMPHLETS RECEIVED.

Messrs. James W. Queen & Co., Philadelphia, send us a new catalogue of Specialties for Physicians, Physiological Apparatus for Original Research, &c. In addition to important electrical apparatus the circular contains lists of a great variety of optical and chemical appliances. Messrs. Queen & Co. make a specialty of fine electro-metrical apparatus.

Messrs. I. W. Colburn & Co., Fitchburg, Mass., manufacturers of arc and incandescent dynamos and lamps, have issued a Vest Pocket Edition of their Price List and Hand Book, containing illustrations of their machines and lamps, and many tables useful to electricians. They have also included a large amount of miscellaneous information, largely in tabular form, embracing interesting topics of physical science and useful arts. The exceedingly small type detracts somewhat from the usefulness of the little volume.

The pamphlet on Vulcanite Emery Wheels, issued by the New York Belting and Packing Co., has much interest for manufacturers and others interested in mechanical processes. Emery wheels are a relatively recent addition to the resources of mechanical work; and in the short treatise prepared by the New York Belting and Packing Co., they aim to show the essential points of the manufacture and use of emery wheels, and under what conditions their service is most effective and economical. These conditions include the mode of manufacture, the speed at which they should be run, and different purposes for which they are best adapted.

ELECTRICAL NEWS AND NOTES.

THE JUBILEE DINNER OF BRITISH ELECTRICIANS IN NEW YORK.

The dinner arranged by resident British electricians in celebration of the jubilee of Queen Victoria's accession and of Wheatstone's telegraph in England, was given with great success on the evening of June 20th, at Martinelli's restaurant on Fifth avenue. At 7.30 P. M. 50 gentlemen, including a considerable number of American electricians fortunate enough to be invited, sat down to dinner in a room gaily decorated with flags, and about 9 o'clock the speech making began, all the toasts being received with musical honors. Mr. George C. Ward gracefully presided, and gave, as the first toast, the health of the Queen in a happy speech, which was drunk standing, with hearty and prolonged cheers, following with that of the President and Mrs. Cleveland, responded to by Dr. Otto A. Moses. In reply to the toast, "The Jubilee of the Telegraph in England," Mr. James D. Reid made one of his characteristic speeches, full of humor and pathos. To the toast, "The Land we Live In," Mr. Erastus Wiman replied in a manner that aroused an enthusiasm only equalled by that attending the toast, "The Land we Were Born In," given by Mr. W. M. Callender, and replied to by Mr. Wm. Maver, Jr. "Our Profession," proposed by Mr. T. C. Martin, was replied to for the telegraph by Mr. F. W. Jones, who said: "It is very interesting to know that at the present time the ideas of the old and new world are crossing the Atlantic over a Wheatstone bridge, which is supported by 10 cables, anchored in both countries; and the American ideas and English ideas pass over this bridge in opposite directions at the same time and never quarrel, nor jostle one another on their way." Answering to the same general toast, Mr. Frank Fisk spoke for the telephone, Mr. Thomas Whiteside Rae for the electric motor, Mr. Callender for the electrical manufacturer, and Mr. G. M. Phelps, Jr., for the electrical press. The toast of "Absent Friends" had Mr. J. B. Taltavall as responder. In giving the toast of "Our American Friends," Chairman Ward said:

"I confess I had an inward desire to offer the toast myself, because I wanted to have the opportunity of telling our American friends how welcome they were and what pleasure their presence gives us to-night, but I have not words at my command to say what I want to. Like Sir William Thomson in his message that has been read this evening, I never have looked, and never can look, upon this grand United States as a foreign nation. From the day I stepped on its hospitable shore I felt I was at home. I have worked and lived with people of many nationalities, from the lethargic Arab of the east to the enlightened and wide-awake American of the west, and I know that in no country in the world is there such freedom, such opportunity, such energy, such enterprise, such push, as in this great country. I owe much to its people. In fact I will take the responsibility of saying we all owe much to its people, and we have much to learn from them. Why do we Englishmen prosper here? I say because the Americans give us the opportunity, and without this opportunity where should we be?—Not assembled here to-night. Speaking for myself personally, I have received the greatest kindness and assistance at their hands, I have many warm friends among them, and I consider it a privilege to be associated with them. We extend our friends a cordial welcome to-night; we hope this may be the beginning of many similar gatherings, and we trust we may continue to be brothers in thought and feeling." The toast was admirably responded to by Gen. E. B. Fowler. The last toast was that of "The Chairman."

Music added much to the festival character of the evening. Mr. E. Gould sang the song "England is where Britons be,"—verses written for the occasion by Mr. T. C. Martin—accompanied by Mr. G. H. Guy, who composed the music; and "The Skippers of St. Ives." Mr. A. E. Braddell sang "Dear Old Pals" and "Sailing"; Mr. W. Forman Collins sang "They all Love Jack," and Mr. J. Wetzler and Mr. G. H. Guy played a piano duet, "Valse Brillante," by Schuloff. The company sang "God Save the Queen," "The Star Spangled Banner," "Hail Columbia," "Yankee Doodle," and "Auld Lang Syne," accompanied on the piano by Mr. G. M. Phelps, Jr.

During the evening letters and telegrams from distant points were read. Sir William Thomson cabled from Glasgow as follows:

"Please convey to the committee my cordial thanks for their kind invitation for the 20th, and my regret that time and space alike forbid my accepting it. Kindly give this message to the company assembled. I am very glad indeed to have this opportunity of expressing hearty sympathy with the native-born British subjects connected with the electrical profession assembled to commemorate our beloved Queen's jubilee, and that of the electric telegraph in England; and with all friends of the United States of America or of foreign nations who may be joining with you. I never can regard the United States of America as a foreign nation, and with the Atlantic cables connecting us, the natural bond is strengthened and rendered practical in a thoroughly beneficent manner. It would have given me much pleasure to be with you all this evening, and as the next best to that, I gladly seized the opportunity afforded me by our good friend Mr. Ward, in thus speaking to you by cable my hearty congratulations, and the pleasure it gives me to join with you in the loyal commemoration of the double jubilee."

A cable message from Mr. W. H. Preece, was read as follows:

I regret I cannot be with you in body as I am in spirit. Britons all over the world rejoice this week in our sovereign's long life and happy reign; but we telegraphers duplex this jubilee, for while it excites our love and loyalty, it also enables us to celebrate the fiftieth anniversary of the birth in England of the means whereby we live. The jubilee of the connecting link of the great Anglo-Saxon race is one of the most important events of the Victorian era. May this never be broken. God bless our Queen."

Mr. Thomas D. Lockwood sent the subjoined telegram from Boston:

"Regret that previous engagement prevents my presence with you. In faith, I am like to greet. May continued advance attend the science, which founded by Gilbert in the reign of Elizabeth and extended by Hawksbee in the reign of Ann, has achieved the chiefest victories in the work of Faraday, Henry and your noble selves, during the fifty years of Victoria's reign."

Mr. J. R. Beard read the following from South America:

"The officers and staff of the C. & S. A. Tel. Co., the West Coast of America Co., and the Transandine Tel. Co., in Central and South America, cordially join me in wishing success to the commemoration of the fiftieth anniversary of the inauguration of the telegraph in England which you celebrate this evening in New York.

"We salute the fraternity. May our cables and our friendship never be interrupted.—Pescod Chorillos."

Letters of regret for absence were received from Mr. Leo Daft, Mr. Edward Weston, and others.

The celebration did not close till the small hours of the morning, and was most heartily enjoyed, not only by the Britons who gave it, but by their American guests.

THE U. S. ILLUMINATING CO.

At the annual meeting of the shareholders of the United States Illuminating Co., held June 21st, the following gentlemen were elected directors for the ensuing year:—Henry S. Marquand, George Montague, Richard Irvin, Jr., James Stokes, Duncan D. Parmly, George W. Hebard, Eugene T. Lynch.

ELECTRIC LIGHTING CONDUCTORS AT THE ROYAL JUBILEE EXHIBITION, MANCHESTER.

The distance of the Fine Art Galleries, and of Old Manchester and Salford, being very great from the dynamo room—in the former case about a fifth of a mile, and in the latter a quarter of a mile—and the very large number of lamps required, have necessitated the employment of exceptionally heavy conducting wires formed into cables for the incandescent lighting of the sections. These cables have been made in various sizes according to the requirements of the several sections, but they represent a total length of cable exceeding nine miles, whilst the bare weight of the copper alone required for the conductors of these cables is calculated to be very nearly ten tons. The whole of the conducting wires, including mains, branches, and leads for the incandescent lighting, and also the major portion for the arc lighting of the exhibition, have been manufactured and supplied by Messrs. Walter T. Glover & Co., of Salford, Manchester.

Digitized by Google

TELEPHONE BETWEEN HAMBURG AND KIEL.

A telephone connection between Hamburg and Kiel has been decided upon, and the preparatory works have been recently commenced. For part of the distance the telegraph wires will be used, but between Hamburg and Altona a separate line will be constructed.

THE UNIVERSITY OF KANSAS.—COURSE IN ELECTRICAL ENGINEERING.

Nothing is more significant of the rapidly increasing prominence of electricity as a science and in the useful arts, than the marked attention given to electrical engineering in many colleges and technical schools.

The University of Kansas, has just issued an announcement of a four years' course in electrical engineering. The scheme presented in its circular treats electrical engineering worthily and upon an equality with civil engineering. The prescribed qualifications for entrance and the course of study laid out, evince a thorough appreciation on the part of the faculty of the nature and scope of the training required to develop capable electrical engineers. Requirements for admission are similar to those of other first-class engineering and technical schools. The four years course includes Mathematics (Algebra and Geometry completed, Descriptive Geometry, Trigonometry, Analytical Geometry, Analytical Mechanics, Differential and Integral Calculus, Mathematical Theory of Electricity and Magnetism), Draughting, Chemistry (General Chemistry, Qualitative and Quantitative Analysis), Physics (Mechanics, Sound, Static Electricity, Electricity and Magnetism, Heat and Light), Surveying, Properties of Metals, Electrical and Magnetic Measurements, Resistance of Materials, Electro-dynamic Machinery, Photometry, Special Applications of Electricity, The Steam Engine, Astronomy, Botany, German, French, Latin, Specifications and Contracts.

The course will be inaugurated at the beginning of the next college year in September.

The circular concludes with the following announcements.

PROVISIONS FOR LABORATORY INSTRUCTION.

During Freshmen and Sophomore years, students in electrical engineering will find excellent facilities for practical work in general physics and chemistry, in the very completely equipped laboratories of the University. To meet the requirements of the more advanced courses of the Junior and Senior years, a large number of instruments for electrical and magnetic measurements are now in process of construction for the University by the best makers in this country and Europe. A steam engine of 15 h. p., with dynamo machines and motors of different types, and complete installations for arc and incandescent lighting and the electric transmission of power, will be in operation by the opening of the college year in September.

SPECIAL STUDENTS.

In placing the course in Electrical Engineering upon an equality with the course in Civil Engineering, already in existence in the University, both in the requirements for admission and in the number of years necessary to its proper completion, the University has in view the needs of students who intend to follow this branch of applied science as a profession, and who desire as complete preparation for their life-work as can be obtained within the limits of a college course. Persons desiring to pursue shorter courses in applied electricity will, however, be given every opportunity for the study of such subjects as they are qualified by their previous training to carry on successfully. Such students must be able in all cases to pass examination in the subjects required for entrance to the University, and in such other branches as are deemed essential to the courses they wish to pursue.

For further information, address

THE CHANCELLOR OF THE UNIVERSITY,
or
EDWARD L. NICHOLS, *Professor of Physics*,
Lawrence, Kansas.

ROSE POLYTECHNIC INSTITUTE.

The Rose Polytechnic Institute, is one of the very few schools in the United States, which are especially devoted to the education of civil and mechanical engineers. It owes its existence to the generosity of the late Chauncey Rose, of Terre Haute, Ind., who bequeathed something more than a half million of dollars for its establishment and support. It is one of the youngest technological schools of the country, having been opened for instruction in the year 1883. One of the peculiar features of the Institute is the thorough and extensive "shop practice" of the students in mechanical engineering. Not only are machines designed and working drawings made, but actual construction is required and is made possible in extensive workshops, the equipment of which has cost over forty thousand dollars.

Another valuable feature, and one which is somewhat unusual, is that the number of students admitted is not allowed to exceed a fixed number.

The plan of the Institute is to restrict the attendance to such an extent as to realize the benefits arising from small classes.

The course in Physics includes "general principles of electrical measurement, of testing instruments, of dynamos, of primary and secondary batteries, of the telegraph and telephone, and of transmission of power to a distance." The President, Prof. Mendenhall, is well known among electricians, and his interest and attainments in electricity will ensure adequate attention to that branch of physics.

ELECTRIC LIGHT AND POWER.

An electric light plant will be erected at Bar Harbor, Me. Judge Nathan Cleaves, of Portland, is interested.

The Pittsfield Electric Illuminating Co., of Pittsfield, Mass., are changing their plant from the old direct current system to the Westinghouse alternating system. Their first installment is for 1,300 lights, and they have received the contract for the city lighting for the ensuing year. 25 c. p. lamps will be used. They are also preparing to run a line to Lenox, Mass., a distance of six miles, for the purpose of lighting the summer residences in that town.

The Plainfield Electric Light Co, Plainfield, N. J., has nearly completed the enlargement of its station to a capacity of 3,000 lights on the Westinghouse alternating system. This is said to be the handsomest finished station in the country. The light is exceedingly popular, both for commercial and domestic use, and the financial results to the company are said to be very satisfactory.

Owego, N. Y., will be lighted by electricity. Address Henry Billings.

The Pueblo Gas and Electric Light Co., Pueblo, Col., will make extensive improvements to its electric light plant.

An electric plant will be put in at Monmouth, Ill. Address, W. B. Young.

The Brookline (Mass.) Gas Co., has bought the Local Electric Lighting Co., of Brookline, operating the Thomson-Houston system, and will operate it in connection with its gas business.

The Edison Illuminating Co., of Harrisburg, Pa., has purchased an arc plant from the Thomson-Houston Co., of Boston, to use in connection with their present incandescent plant.

The Pennsylvania Gas Co., will establish an electric light plant at Jamestown, N. Y.

The electric light excites rather more enthusiasm in the prairie state than in eastern localities. We quote below from a late issue of the *Evening Eye*, Roodhouse, Ill., a notice of an arc light installation in that town.

FIAT LUX.

THE ELECTRIC BLAZES OUT IN ALL ITS DAZZLING GRANDEUR.

* * * * *

When everything was ready for the test, and steam was let in to cylinders of the "little giant" Westinghouse engine, as many as could crowd in and around at the doors and windows were anxiously watching. Four lamps were connected with the circuit, and as with the quickness of lightning, the dazzling arcs of flame burst forth between the carbon points, as if the genius of electricity, angry to find his course opposed, had leaped the barrier, white with rage.

From the first the light was a perfect success. The room was illuminated with a brilliancy that cannot be described. It was a perfect glare of light. The only comparison we can think of is the fierce white flame of a molten mass of iron in a blast furnace. Except for the shadows, such an appearance did the room present.

Finding that everything was working to a charm, and that the light was all that could be desired, Mr. McIver and Mr. Shockley, representatives of the Western Electric Company, decided, in order to get the full effect of the light, to test one suspended from the Armstrong building to the bank at the northwest corner of the square.

The lamp was placed in position and hoisted away. A few moments of breathless expectation, and a great cheer goes up as the carbons break into flame. The effect was wonderful and far exceeded the expectations of all. It was well calculated to arouse enthusiasm.

* * * * *

To "drop into poetry" was natural after such a burst of light and enthusiasm, and in the same paper we find :—

PANSY'S PIECE.

No more in darkness will we grope
Along the gloomy street,
And on a narrow walk collide
With every one we meet.

The wonderful electric light,
Our highways will illume,
While all the towns for miles around,
Are talking of our boom.

Behold it gleaming in the sky,
With scintillations bright,
Like some resplendent jewel in
The shirt front of the night.

The pale moon shines with sickly hue,
And hides her yellow face,
The spark electric rules the night,
And has usurped her place.

And burning Phoebus, lord of day,
When this new sun he sees,
Withdraws himself to other parts,
And shines on the Chinese.

The Burlington (Vt.) Gas Light Co., started a Brush plant 10 months ago, with 50 street arcs and 11 commercials. To-day it has 70 street lights and 25 commercials, and expects further increase. It is extremely pleased with the working of the plant, and advises other gas companies to follow its example. It says, moreover, that the use of the electric light has unquestionably stimulated the demand for gas.

The Portland Electric Light Co., Portland, Or., having made a success of arc lighting, has decided to go largely into incandescent lighting. It has contracted for four 60 h. p. Westinghouse engines, making seven in all.

The City Council of Atlanta, Ga., has authorized the Metropolitan Street Railway Co., of that city, to operate its road by electricity.

An electric street railway is projected for Muncie, Ind.

Digitized by Google

Prof. Thomson is quoted as predicting that when the means of utilizing the power of creating quick heating by electricity is better understood it will be used in every workshop for welding, forging and other purposes. It would be well for our manufacturers to watch the progress of the adaptation of electricity to manufacturing purposes.

Foreign.

Austria.—The central railway station in Buda-Pesth is lighted by 70 arc lamps of 600 c. p., 430 glow lamps of 20 c. p., and 461 glow lamps of 10 c. p. The engineer in charge, Herr Kovacs, has just handed to the board of directors a report on the working expenses of this installation. The whole of the arc lights are nightly in use; but of the incandescent lamps 279 are not in regular use, these being fitted in state rooms, board rooms, etc., and only lighted on special occasions. The total annual 10-candle lamp-hours were 2,770,775, in which figure are included the 20-candle lamps, as equivalent each to two 10-candle lamps. The total annual arc lamp-hours were 211,390. The annual working expenses are given in Austrian money, of which, for the convenience of our readers, we give here the approximate equivalents in United States money, calculated at the current rate of exchange: Glow lamps burned out, $1,265; carbons for arc lamps, $2,167; fuel, $2,289; lubricants, $535; petty material, $876; personal expenses and wages, $3,530; engine repairs, $477; electrical repairs, $268; total, $11,407. Since the installation is mixed, it is desirable to obtain a common basis on which to estimate the working expenses per unit of light, and for this purpose, Herr Kovacs estimates 15.8 10-candle glow lamps to be equivalent in energy to one of the arcs, and on this assumption the total annual 10-candle lamp-hours result as 6,284,030, the expenses being at the rate of, say, 18 cent. per 10-candle lamp-hour. This is found much lower than the cost of the same amount of light from gas at Vienna prices, about 1.25 per thousand feet.

Belgium.—The *Bulletin International de L'Electricité* states that five cars have been actually fitted up on M. Julien's system, and the inauguration of the service is announced for the end of this month. This date may be a little too soon, but we may reckon on the cars being in operation by May 15th, notwithstanding the difficulties which M. Julien has to deal with at present, one being that the representative of Messrs. Siemens at Brussels threatens the tramway company with an action for infringement in connection with the armature of the machine employed by M. Julien. This matter, which is to be submitted to examination by experts, will cause some excitement in Brussels.

Belgium.—The inauguration of electric traction on the Brussels lines has been arranged to take place this month, and five cars have already been supplied by the Societe l'Electrique. The installation in the Rue Bronier, where the accumulators are to be charged, is almost finished. It consists of DeNayer boilers, a 150 h. p. Walschaerts engine, and four dynamos each for a current of 30 amperes, but varying voltage from 200 to 500. The engine and boilers, the dynamos and the batteries, are all in different rooms. The battery room has been arranged so as to facilitate quick charging, and special arrangements are being made for the easy and rapid replacement of the batteries in the cars when these enter the station.

France.—The ironclad *Le Furieux*, which is now being constructed at Cherbourg, has recently been fitted with two projectors of 15,000 c. p. each, and 150 16 c. p. incandescent lamps. Gramme dynamos, driven by Brotherhood engines, are used. In the Mediterranean, experiments have been made for the protection of harbors against torpedo attack. The search light is placed on a revolving platform, about 33 feet above the level of the sea, and by changing the position of the arc in the lantern, it is possible to either illuminate a considerable area, or to concentrate all the light on one point. During these experiments, it was found that the approach of a torpedo can be detected, even at a considerable distance.

Germany.—The Khotinsky glow lamp has met with considerable success in Germany, and has, up to the present mainly been supplied by a Rotterdam company, which has also works at Cologne. The German Edison company now claim that the right of manufacturing this kind of lamp is covered by certain of their patents, and an action has been instituted against the Dutch company to restrain them from making such lamps. M. Khotinsky is said to have succeeded in manufacturing reliable 150-volt lamps.

Hungary—A project has been set on foot for the introduction of the electric light in the town of Fiume, the most important seaport of the Hungarian empire. It is proposed to utilize the water power of the river Fiumera, which comes from the Karst Mountains, and has a magnificent fall a few miles from the town. Since the town contains the large torpedo works of Whitehead, an important tobacco factory, and several large paper mills, the promoters are confident of obtaining sufficient custom to justify their commencing with an installation of 3,000 lights, which, however, will be arranged with a view to future extensions. It is proposed to employ transformers.

Russia.—The Czar of Russia, at his winter palace on the banks of the Neva, possesses what is probably the largest permanent installation of electric light ever placed in a single building. The palace itself is illuminated by 12,000 incandescent lamps, while 56 powerful arcs light up the front and the various court-yards. The machine room contains eight engines, capable of developing 2,500 h. p.; the dynamos, including reserve machines, are 26 in number. The work was planned and carried out by the engineers of the palace, in conjunction with the St. Petersburgh house of Siemens & Halske, and the installation has been at work since the commencement of last winter.

NEW INCORPORATIONS.

The Chicago Arc Light and Power Co., Chicago, Ill. Capital stock, $1,000,000. Sidney A. Kent, and others, incorporators.

The Improved Light, Heat, Power and Manufacturing Co., Saco, Me. Capital stock, $500,000. President, Frank A. Dearborn, Newton, Mass.

The Home Electric Light Co., Roanoke, Va. President, J. M. Gambill.

The Hiawatha Electric Light Co., Hiawatha, Kas. Capital stock, $20,000. John Schilling, and others, incorporators.

The St. Louis Investment Co., St. Louis, Mo. Capital stock, $30,000. David B. Gould, and others, incorporators.

The Thomson-Houston Electric Light, Heat and Power Co., Woodbury, N. J. Capital stock, $25,000. Charles O. Baird, and others, incorporators.

The Clinton Electric Co., Clinton, Mo. Capital stock, $18,000. George Hormeyer, and others, incorporators.

The Hamilton Electric Light Co., Hamilton, Ohio. Capital stock, $50,000. Thomas Millikin, and others, incorporators.

The Manhattan Electric Co., Manhattan, Kas. Capital stock, $25,000. George Higinbotham, and others, incorporators.

The United Electric Light Co., Springfield, Mass. Capital stock, $100,000. Gideon Wells, and others, incorporators.

The Millbury Electric Co., Millbury, Mass. Capital stock, $10,000. C. D. Morse, and others, incorporators.

The Charleston Electric Light Co., Charleston, Ill. Capital stock, $15,000. J. W. X. Neal, and others, incorporators.

The Ashtabula Electric Power and Light Co., Ashtabula, Ohio. Capital stock, $5,000. W. J. Morrison, and others, incorporators.

The C W. Harvey Electric Light Co., Waterloo, Iowa. Capital stock, $40,000. C. W. Harvey, and others, incorporators.

The Battery Light and Power Co., Buffalo, N. Y. Capital stock, $1,000,000. Charles H. Gibson, and others, incorporators.

The American Electric Light Co., limited, of Carthage, N. Y. Capital stock, $7,500. Vergil K. Kellogg, and others, incorporators.

The Napoleon Electric Light Co., Napoleon, Ohio. Capital stock, $15,000. Alfred Beard, and others, incorporators.

The Eickemeyer Dynamo Machine Co. Capital stock, $60,000. Rudolph Eickemeyer, and others, incorporators.

The Warsaw Electric Light Co., Warsaw, Ill. Capital stock, $3,000. George P. Walker, and others, incorporators.

The Mutual Electric Illuminating Co., New York, N. Y. Capital stock, $25,000. John G. H. Meyers, and others, incorporators.

The Citizens Freeman Electric Light Co., New York, N. Y. Capital stock, $30,000. Thomas O'Brien, and others, incorporators.

The Dexter Electric Light and Power Co., Dexter, Wis. Capital stock, $10,000. Samuel S. Ireland, president.

PERSONAL MENTION.

Mr. Robert H. Read, for six years an examiner in the patent office, in the chemical and electrical divisions, has begun business on his own account as solicitor of patents and mechanical and electrical expert. Mr. Read's experience in the patent office, where his services were very valuable and highly appreciated by the commissioners, well qualify him for success in his new field.

MANUFACTURING AND TRADE NOTES.

The Phosphor-Bronze Smelting Co. (Limited), Philadelphia, are finding a wide market for their products. Their metal proves applicable to a great variety of uses. They have recently issued a circular, giving, with other information, a table of prices for machine castings, with a convenient classification of qualities and uses, the prices varying somewhat for different grades of metal.

Digitized by Google

The Stratton Separator Co., recently received by telegraph an order from the Pennsylvania Railroad, for three of their steam separators, for use on high-speed engines at Philadelphia, Altoona, and Harrisburg. They are now placing an apparatus on the 17" steam pipe of the U. S. Steamer *Boston*, at the Brooklyn Navy Yard, which is a duplicate of the one previously placed on the U. S. Steamer *Atlanta*, with such very satisfactory results in the development of both power and speed.

The Billings & Spencer Co., who were the first to make drop-forged commutators for dynamos, have been pushed even beyond their utmost possible capacity to keep in sight of orders. They are making about a dozen sizes of these copper pieces for the Edison Electric Co., and a similarly large number for the Westinghouse Electric Co.

The demand for their products has compelled the New York Carbon Works to fit up a new factory at Newark. New ovens and additional machinery are being provided for the manufacture of their special battery carbons. The office of the works is at 39 Dey street, New York.

The Westinghouse Electric Co. are meeting with an enormous demand for their alternating system for central station work. The shops employ about 1,200 men, and are working a night gang. Their lamp factory is already the largest in the United States. They have now over 40 stations under construction or in operation. Recent contracts have been made in Pittsfield and Springfield, Mass.; Hartford, Conn.; Denver, Colorado Springs and Ouray, Colorado; St. Louis, Mo.; Cornwall, Canada; Littleton, N. H.; Portland, Me.; Morristown, N. J.; Staten Island, N. Y.; Galveston, Texas, and Charleston, W. Va.

The self-winding clocks, made under patents of Mr. Chester H. Pond, are manufactured and sold by the American Mfg. and Supply Co., 10 and 12 Dey street, New York. These clocks are electric only in the sense that the winding mechanism is actuated electrically. Each clock is supplied with a small battery, which is usually concealed within the case, or it may be placed in any other location if desired. The clocks are entirely automatic, self-winding at regular intervals by electricity, thus obviating all the care and attention required in the use of key-winding clocks. Experts in horology have expressed very favorable opinions of the advantages of these self-winding clocks.

INVENTORS' RECORD.

Prepared expressly for THE ELECTRICIAN AND ELECTRICAL ENGINEER, *by* Pope, Edgecomb & Terry, *Solicitors of Patents for Electrical Inventions*, 11 *Wall Street, New York city.*

CLASSIFIED LIST OF UNITED STATES ELECTRICAL PATENTS.

From May 17th to June 14th, 1887 (inclusive).

Alarms and Signals:—*Electro-Magnetic Thermoscope*, H. J. Haight, 362,957. *Recording Compass and Marine Indicator*, R. W. F. Abbe, 363,039. *Electrical Device for Operating Steam Whistles*, W. M. Pease, 363,079. *Electrical Matting*, A. H. Freeman, 363,290. *Thermostat for Incubators*, C. L. Wells, 363,307, May 17. *Mail-Box Indicator*, C. M. Ball and T. J. McTighe, 363,574, May 24. *Signal Box*, H. A. Chase, 363,948, May 31. *Annunciator System*, P. Seiler, 364,444, June 7. *Thermostatic Circuit-Closer*, W. S. Johnson, 364,518, June 7. *Electric Burglar-Alarm*, G. R. Lehy, 364,764. *Low-Water Alarm for Steam-Boilers*, W. J. Kassler, 364,940, June, 14.

Clocks:—*Electric Striking Device for Clocks*, S. C. Dickinson, 363,215, May 17. *Secondary Electric-Clock Movement*, C. D. Warner, 363,440. *Primary Electric Pendulum Clock*, J. Zeiner, 363,498, May 24. *Electric Clock*, J. E. Mejer, 364,429, June 7. *Electric Synchronizing Apparatus for Clocks*, A. Ramel and W. W. Dean, 365,023, June 14.

Conductors, Insulators, Supports and Systems:—*Covering Insulated Electric Conductors*, J. Tatham, 363,182, May 17. *Machine for Making Seamless Lead-Covered Electrical Conductors*, G. L. Kitson, 364,177. *Lead-Covered Electric Conductor or Cable*, same, 364,178, May 31. *Terminal or Distributing Box*, F. E. Degenhardt, 364,994, June 14.

Distribution:—*System of Electrical Distribution for Railways*, W. J. McElroy and J. D. Nicholson, 363,250. *Indicator for Electric-Lighting Systems*, W. J. Hammer, 363,333, May 17. *System of Conversion of Electrical Energy into Mechanical Force*, H. M. Paine, 363,669, May 24.

Dynamos and Motors:—*Dynamo-Electric Machine*, J. W. Easton, 363,128. *Method of and Apparatus for Detecting Short-Circuits in Dynamo-Electric Machines*, same, 363,129. *Self-Exciting Alternate-Current Electric Generator*, same, 363,126. *Safety-Contact Brush for Dynamo-Electric Machines*, same, 363,127. *Automatic Commutator-Adjuster*, E. Thomson, 363,184. *Alternating Current Electric Motor*, same, 363,185. *Alternating Current Motor Device*, same, 363,186, May 17. *Electric Motor and Dynamo-Electric Machine*, R. M. Hunter, 363,466, May 24. *Electric Motor*, G. F. Card, 364,086, May 31. *Method of and Apparatus for Forming Armature Cores*, F. Wynne, 363,106, May 17.

Galvanic Batteries:—*Pocket-Battery*, L. T. Stanley, 363,304, May 17. *Electrolyte* A. C. Tichenor, 363,562, May 24. *Device for Preventing the Escape of Noxious Fumes from Batteries*, M. Bailey and J. Warner, 363,880, May 31. *Galvanic Battery Cell*, J. R. Hard, 364,344, June 7. *Galvanic Battery*, V. Francken and E. Bender, 364,639. *Battery Solution*, W. P. Kokogey, 364,656. *Battery Cell*, A. V. Meserole, 364,660, June 14.

Ignition:—*Electric Gas-Lighting Apparatus*, I. Fisher, 364,235, June 7. *Electric Gas Lighter*, C. W. Holtzer, 364,760, June 14.

Lamps and Appurtenances:—*Electric Arc Lamp*, J. F. Denison, 363,611. *Incandescent Electric Lamp*, C. G. Anderson, 363,500; W. Stanley, Jr., 363,559, May 24. *Device for Attaching and Detaching Electric Lamps*, W. J. Hammer, 363,332, May 17. *Incandescent-Lamp Fixture*, M. J. Wightman and H. Lemp, 363,568. *Shade or Globe Holder*, S. B. H. Vance, 363,702, May 24. *Process of Repairing Incandescent-Electric Lamp Filaments*, C. Panthonier, 363,909. *Method of Carbonizing Incandescents*, W. Maxwell, 364,031.

Medical and Surgical:—*Electric Belt*, W. W. Dunlap, 363,886, May 31.

Metallurgy:—*Process of and Apparatus for Working Metals by the Direct Application of the Electric Current*, M. De Benardos and S. Olszenski, 363,320, May 17. *Apparatus for Amalgamating Gold*, B. C. Molloy, 363,411, May 24. *Apparatus for Saving Floured Quicksilver*, J. H. Roe, 364,372, June 7.

Miscellaneous:—*Blackleading Matrices for Electrotypes*, E. A. Blake, 362,927. *Instrument for Ascertaining the Variation of the Compass*, H. Harild, 362,960. *Transmitter for Electrical Type-Writers*, J. F. McLaughlin, 363,158. *Electrical Switch*, E. Thomson, 363,183; W. J. Hammer, 363,334, May 17. *Manufacture of Watch Mainsprings*, F. Sedgwick, 363,550. *Lightning Arrester*, M. J. Wightman and H. Lemp, 363,567. *Process of Cleaning, Preparing and Coating Metal Plates and other Metal Surfaces*, F. J. Clamer, 363,593. *Electric Lock*, M. I. Flowers, 363,623. *Electric Temperature Controlling Device*, H. E. Jacobs, 363,644 and 363,645, May 24. *Induction Coil*, J. Ritchie, 363,851. *Electrical Safety Device for Elevators*, R. M. Curtiss re-issue 10,838. *Transparent Dial for Watches*, C. Humbert Fils, 363,959, May31. *Equipment for Theatrical Stages*, J. Curry, 364,221. *Automatic Fire Extinguisher*, C. D. Rogers, 364,299. *Electrical Contact Device for Hose-Coupler*, W. F. Wamsley and T. McIntosh, 364,558; W. F. Wamsley, 364,559. *Lightning Rod*, J. H. Schronmaker, 364,605, June 7. *Cut-Out Block*, E. McEvoy, 364,721. *Instrument to Assist Hearing*, L. P. Townley and W. J. Washburn, 364,975. *Electrical Device for Operating Elevator Valves*, C. G. Otis, 365,018, June 14.

Railways and Appliances:—*Method of and Apparatus for Operating Pressure or Vacuum Brakes*, H. Hollerith, 363,463. *Electro-Pneumatic Brake for Railroad-Trains*, same, 363,464, May 24. *Railway Signal*, B. H. Gedge, 364,009, May 31; J. H. Armstrong, 364,204, June 7.

Telegraphs:—*Telegraphy*, F. Van Rysselberghe, 363,188, May 17; L. Maiche, 364,271; L. Bock, Jr., 364,471, June 7. *Multiple Telegraph System*, C. Selden, 363,969, May 31. *Telegraphic Alphabet*, W. A. Leggo, 364,356. *Relay-Instrument*, G. E. T. Woods, 364,619, June 7. *Synchronous Telegraphy*, R. G. Brown, 364,893 and 364,894, June 14.

Telephones, Systems and Apparatus:—*Mechanical Telephone*, J. Lanhoff, 363,249, May 17. *Telephony*, J. J. Carty, 363,449, May 24. *Desk for Telephones*, J. D. Richardson, 364,133, May 31. *Recording and Reproducing Sound Waves*, L. Bock, Jr., 364,472. *Telephone Transmitter*, J. W. Banta, 364,475, June 7.

The India-Rubber and Gutta-Percha Insulating Co.

MANUFACTURERS OF

ALL KINDS OF INSULATED WIRES AND CABLES.

Guaranteed to give satisfactory service under ground and over head. Specially adapted for CHEMICAL WORKS, PAPER MILLS, DYE WORKS, COAL MINES, Etc., Etc. Prices and Samples on application.

W. M. HABIRSHAW, General Manager.

No. 159 FRONT STREET. NEW YORK CITY.

H. M. RAYNOR,
25 Bond Street,
New York.
Established 1859.

PLATINUM FOR ALL PURPOSES

Wholesale and Retail.

Carbon Plates FOR **Electrical Purposes.**

NEW YORK CARBON WORKS,
HENRY MÜLLER, Jr., Prop., 39 Dey Street, New York.

Digitized by Google

THE ELECTRICIAN
AND
ELECTRICAL ENGINEER.

Conducted by F. L. POPE. G. M. PHELPS, Jr., Associate Editor.

PUBLISHED MONTHLY BY

THE ELECTRICAL PUBLISHING CO.,

115 Nassau Street, New York city.

European Agent, F. H. WEBB, 4, The Sanctuary, Westminster, London, S.W., Eng.

TERMS OF SUBSCRIPTION.

United States and Canada, - - -	per annum,	$3.00
Four or more Copies, in Clubs (each) - - - -	"	2.50
One Copy, Four Months, - - - - - -		1.00
Great Britain and other Foreign Countries within the Postal Union	"	4.00
Single Copies, - - - - - - - - - -		.25

[*Entered at the Post Office at New York, N. Y., as second class mail matter.*]

EDITORIAL ANNOUNCEMENTS.

Addresses.—*Business letters should be addressed and drafts, checks and post-office orders made payable to the order of the* ELECTRICAL PUBLISHING CO. *Communications for the attention of the editors should be addressed,* EDITOR OF THE ELECTRICIAN AND ELECTRICAL ENGINEER, 115 *Nassau Street, New York city.*

Communications *suitable for our columns will be welcomed from any quarter. Discussions of subjects relating to all branches of electro-technical work, by persons practically acquainted with them, are especially desired. Unavailable and rejected manuscripts will be returned only when accompanied by the necessary postage.*

Advertisements.—*We can entertain no proposition to publish anything for pay, or in consideration of advertising patronage, except in our advertising columns. Our editorial columns will express our own opinions only, and we shall present in other columns only such matter as we consider of interest or value to our readers*

NEW YORK, AUGUST, 1887.

THE FUTURE OF ELECTRICAL TRANSPORTATION.

THE application of electricity as a motive power for railway trains, the earliest conception of which appears to be due to that eccentric genius, Henry Pinkus, "late of Pennsylvania, in the United States of America, gentleman," who flourished in London *circa* 1840, has apparently passed through its preliminary experimental period, as exemplified by the work of Siemens at Berlin, Edison at Menlo Park, Finney at Pittsburgh, and Field at Chicago, and has now reached the stage of a somewhat extended practical development. This era in the progress of the art may be said to have commenced with the Lichterfelde line of Siemens, opened May 16, 1881, which was followed by the Portrush line, September 30, 1882, and these two by many others, as given in Mr. Martin's table, published on page 228 of our current volume. At the present moment a glance at the technical journals is sufficient to show that electric railway enterprises are springing up like mushrooms in every direction, both in this country and abroad.

It may not be uninteresting at the present juncture to attempt to forecast some of the probabilities of the future development of electric transportation, in the light of what has already been accomplished.

In one field, that of surface street railroads, the universal employment of the electric motor is without doubt only a question of time, and not a very long time either. The practical success which has everywhere attended the introduction even of the comparatively crude methods and apparatus at present in use are a sufficient evidence of the ultimate fulfilment of the prophecy. Even the ingenious and efficient, though expensive, cable system is certainly destined to follow the patient plodding horse into the limbo of superseded and obsolete street-car motors.

The next field to be occupied is that of the elevated and other city and suburban rapid transit passenger lines. This undertaking is a far more difficult one, but its accomplishment may, in our opinion, be looked for at no distant day. The conditions of the problem have been thoroughly mastered, the obstacles to be met with are sufficiently well appreciated and understood, and meanwhile several of the ablest practical electricians of the day are devoting their best energies to the subject. No less than four electric locomotives designed for this class of service are under construction by different parties at the present time, and we shall be much disappointed if one or more of them does not upon trial give sufficiently favorable results to render the future success of electric traction on railways of this class an assured success. The relief to the public in being freed from the annoyance of steam, smoke and cinders, and in great measure of noise as well, will be incalculable, while the probable resulting economy in operating expenses, although in our opinion considerably overestimated by sanguine inventors, will nevertheless be sufficient to render the change a profitable one to the owners of the roads.

Another field, and one in which the electro-locomotive of the future may be expected to achieve its greatest triumphs, is that of rapid passenger traffic between our chief commercial centres. Steam locomotion, so far as speed is concerned, has practically reached its limit. The unavoidable restrictions of bulk and weight forbid any material increase in the power of the express locomotive of to-day. No such restrictions apply to the electric engine. The amount of power which by this means it is possible to apply to the axles of an ordinary train without materially increasing its weight, may, without exaggeration, be said to be almost limitless. We believe that the rapid transit railway of the future will have its trains propelled by electricity; it will be straight, as the crow flies; it will follow the topographical undulations of the country almost regardless of grades, and its trains will attain a speed of more than one hundred miles per hour with safety. Without doubt, this may be looked forward to as the next great step in the progressive improvement of the art of transportation.

It remains to speak of another development of electric transport, which for some occult reason has failed, at least in this country, to attract the attention that its importance deserves—the telpher system.

This ingenious invention, although apparently perfectly successful at Glynde, England, where it has been for quite a long time in practical operation, can be expected to have but a limited field of usefulness in the land of its nativity, compared with that which awaits it in the rugged and mountainous regions of our western mining states, to say nothing of the vast undeveloped territories of Mexico, and Central and South America.

We have thus briefly indicated some of the probable future lines of development of electric transportation. Doubtless many others will discover themselves from time

Digitized by Google

to time, as the ceaseless march of improvement goes on; but what the ultimate outcome will be is scarcely less difficult of prediction at the present moment than it was in the days of "Henry Pinkus, of Pennsylvania," now almost half a century ago.

ELECTRICAL DISTRIBUTION BY INDUCTION.

According to a report published in the newspapers at the time, Mr. Edison said in the summer of 1883: "About six weeks ago I closed my laboratory, and I have now got the system worked down to the minutest detail. There is nothing more in electric lighting to be invented or required." If Mr. Edison really did make the statement thus attributed to him he must have been laboring under a temporary misapprehension. At least one thing more was very urgently "required" in 1883 and for sometime afterwards, and that was a system whereby electricity could be distributed at a cost which would permit of the payment of reasonable dividends to the stockholders of the illuminating companies operating incandescent lamps from central stations.

It was perhaps well for the progress of the art that other inventors were in the field who were not quite so certain that the *ultima thule* had been reached in electric lighting. At the very time that Mr. Edison closed his laboratory for the alleged reason that there remained "nothing more in electric lighting to be invented," an apparatus was being for the first time publicly exhibited in London, which, as it now appears, was destined to produce a revolution in the art of electrical distribution for incandescent lighting. The claim then put forth by the inventors, Messrs. Gaulard & Gibbs, namely, that they presented their method as a solution of the problem "of the further industrial development of absolute distribution, that is to say, a system of distribution limited neither by the distance of the central factory from the point of consumption, nor by the number of consumers to be supplied," was received in some professional circles with mild and in others with energetic incredulity. They persevered, however, in spite of ridicule and opposition, and in the autumn of 1883 seven miles of the underground railway in London were fitted up by them, this being the first industrial plant ever put in service for lighting by alternating main line currents and local induction coils. In commenting upon this installation, soon after its completion, *Engineering*, a high authority, urged as a prominent consideration in its favor that "the cost of a conductor to carry the current directly for lighting by incandescence on a circuit of fifteen miles would be perfectly prohibitory to any scheme."

In September, 1884, another plant was set up at the Turin exhibition, on which occasion a group of 24 Swan lamps was lighted at a geographical distance of 25 miles from the generator. This demonstration was followed by the installation of a commercial plant in London of nearly 1,500 lamps. The difficulties of regulation in the Gaulard & Gibbs system, which were from the first of a quite serious character, were soon traced to their true cause by Kennedy, of Glasgow, who in a communication published in June, 1883, pointed out that the irregularities observed were due to the series arrangement of the inductive primaries then in vogue, but that by placing the latter in parallel arc these would be obviated, and the system would become, as he expressed it, "beautifully self-regulating." The importance of Kennedy's suggestion was but little appreciated until long afterwards. In fact the entire system, in the words of Kennedy, was "criticised by some, scoffed at by many, and altogether ignored by the majority of electricians." By way of exception to the general rule, it may be noted that the Hopkinson brothers, with their usual sagacity, designed in 1884 important improvements in the construction of the induction apparatus, which they patented, and then quietly awaited the progress of events. In 1885 Zipernowski and Deri, of Hungary, announced a new and greatly improved system of electrical distribution by induction which for a time attracted much attention, but which turned out after all to be little more than a reinvention of the improvements which Kennedy and the Hopkinsons had made upon the original Gaulard & Gibbs invention.

In the following year, 1885, Westinghouse established the first commercial plant of the kind in this country, embodying the inventions of Gaulard & Gibbs, Kennedy and Hopkinson, together with many improvements in detail originating in his own establishment. The sudden popularity and gratifying success which has attended the introduction of this admirable system in this country is due to its economy in first cost, as well as in maintenance and operation, its perfect adaptation to all conditions of service, and last but not least, to the simplicity and excellence of the construction of the apparatus.

From present indications it would certainly seem that the incandescent lighting system of the future will be operated by inductive apparatus and alternating currents.

The reorganization of the New York Subway Commission, as the Board of Electrical Control, with Mayor Hewitt added to its membership, is less satisfactory than it would be if the Commissioner of Public Works and the Comptroller had also been added to the commission as proposed in the interest of the city. But, while the mayor is a minority of one-fourth for voting purposes he has already shown himself a majority of three-fourths or more in knowledge, common sense, and appreciation of the nature and scope of the work of the board. Gratification and amusement for the public were provided in about equal quantities by the proceedings at recent meetings of the board. Mr. Hewitt's incisive questions and determined action routed the old members of the commission, horse, foot, and dragoons. He administered some elementary instruction on the rusting of iron pipes; asked the chief engineer a few questions about electric light wires under which Mr. Kearney collapsed, and finished a good afternoon's work by preventing the appointment as chief inspector, at a salary of $3,000—of one Cornell, a city politician. The mayor's questions concerning the qualifications of Cornell as an electrical engineer brought out the fact that he possessed no knowledge or experience of electrical work, together with the comical suggestion, offered with much seriousness, that he was teachable and would be instructed by the chief engineer. The commissioners were deeply grieved that their nominee, backed by the recom-

Digitized by Google

mendation of chief-engineer Kearney, should be so closely scrutinized by the mayor. Their emotion was too much for them, for just as they were about to vote Mr. Cornell in as chief inspector they lost their heads or their courage and permitted the passage of a sudden motion to adjourn, offered by the mayor.

Whether or no Mr. Hewitt succeed in forcing the Board of Electrical Control to adopt a policy and methods solely in the interest of the city, and to place the execution of their work under the guidance and supervision of competent electrical engineers, he has rendered and doubtless will continue invaluable service as a check upon the commission.

Not much has been expected in the way of promoting the legitimate objects of the commission from politicians like Mr. Jacob Hess, but better things have been expected of Mr. Gibbens than his advocacy of so conspicuously unfit an appointment as the one attacked so promptly and effectively by Mayor Hewitt.

Mr. Rankin Kennedy, of Glasgow, in the current installment of his very interesting series of papers on Electrical Distribution by Alternate Currents and Transformers, remarks in reference to the United States patent of Gaulard and Gibbs, that he understands these parties to claim to be the only true inventors of the *parallel* system of working transformers at constant potential. A more careful study of the claims of the patent will, we think, convince Mr. Kennedy that he is in error in this particular. It is only just to Mr. Kennedy to say that the importance of his own work in this field is well understood in this country, and so far as we are aware, the fact that he was the first, not only to point out the advantages of the parallel system, but to clearly explain the reasons therefor, has never been questioned. It is, however, true, as he states, that the series system has never been tried in America,—at all events for practical work, while on the other hand we may mention that many successful plants are at work on the parallel system, making use of a converter differing but little in principle from Mr. Kennedy's ring converter of 1883.

Prof. Tyndall's retirement from the Chair of Natural Philosophy in the Royal Institution was signalized by a banquet in London, June 29th, in his honor and in recognition of his distinguished service in the cause of science. A notable company of men of learning and achievement attended. We reproduce elsewhere an extract from Prof. Tyndall's address in response to the toast to his health, for which we are indebted to the columns of the *Electrician* of London.

The sentiments of regard and appreciation bestowed upon Prof. Tyndall by his countrymen will be largely shared in America. His memorable visit here fourteen years ago, during which he delighted as well as instructed all who were privileged to enjoy his lucid and beautiful lectures, made a lasting impression, and had much influence in stimulating interest and effort in the cause of scientific research.

The practical every day use of telegraphing to and from moving railroad trains on the Lehigh Valley railroad, described in a notice reprinted from the *Railroad Gazette*, in another column, though promising a useful and important addition to the resources of railway management and a convenience to the traveling public, will scarcely be deemed an unmixed benefit. One can count no longer on an express train as a refuge offering complete immunity for a few hours from missives of any kind; his reading, musing or sleeping will be at the mercy of the telegraph, his temporary refreshing isolation gone. Perhaps a steamer at sea may not much longer keep out of reach of the dots and dashes of the telegraph; if Mr. Edison can telegraph through seven miles of sea water why not through seven thousand?

One of the stock assertions of the oratorical and newspaper mouth-pieces of that highly disinterested group of citizens, who for the last few years, in season and out of season, have vociferously demanded the instantaneous inhumation of the electric wires, has been that such wires are all underground in London, *ergo*, the same thing can be done here. But now comes the annual report of the United Telephone Company of London, from which it appears that the cost of repairing the damages to overhead wires caused by the great Christmas storm of 1886, was over $75,000, a very tidy little sum, and one which indicates that all the overhead wires are not in New York after all.

The Semi-annual Convention of the National Electric Light Association, to be held at the Parker House, Boston, August 9th, 10th and 11th, will doubtless be largely attended. Several matters of importance were partially considered at the February meeting, and left over for further action, among them the proper insulation of conductors and the wire gauge question.

The rapid development of improved methods of distribution is attracting general attention among electric light people. Interesting reports and discussion on this subject should be forthcoming at the Convention.

The *Western Electrician*, of which four weekly numbers have now been issued, has fully justified the favorable anticipations felt and expressed in many quarters. Its columns exhibit a judicious combination of electrical news and technical articles. It is well illustrated, and in general appearance is a very handsome journal; typography and press-work are extremely good. Chicago is to be congratulated upon the establishment of so creditable an electrical journal.

The success of the Electrical Exhibition undertaken by the New York Electrical Society in connection with the autumn exhibition of the American Institute, is already assured by the number and character of the applications for space now in hand. Apparently the electrical exhibits will be the predominant feature of the general industrial fair. Elsewhere we print the lists of committees and the rules adopted for the management of the Electrical Exhibition.

Digitized by Google

ARTICLES.

EXPLORATIONS OF THE MAGNETIC FIELDS SURROUNDING DYNAMOS.

BY CARL HERING.

During the Electrical Exhibition at Philadelphia, in 1884, the writer had occasion to examine the large Edison dynamo, commonly known as "Jumbo," with a view to find what disturbing effect, if any, the iron of the direct coupled steam engine had upon the distribution of the magnetism of the two pole pieces, it being attached to one of them. The examination was directed to finding the position, polarity, and approximately the intensity, of magnetic poles on different parts of the engine and pole pieces. By the somewhat strange behavior of the exploring needle, the writer's attention was called to the peculiar distribution of the magnetism around the yoke piece and parts of the coils of the dynamo itself where it was apparently not affected by the engine. The peculiar results obtained in some parts led to a similar examination of other machines at the exhibition with a view to making diagrams of the magnetic fields surrounding the dynamos by plotting the direction of the external lines of force. The resulting diagrams were not only interesting but may also prove to be instructive to designers and builders of dynamos, as they show clearly and conclusively the nature of the invisible field surrounding the different parts of the magnets; and as a large part of this field is leakage or wasted magnetism, they show how frames should and how they should not be constructed with reference to magnetic distribution.

The tests were made as follows. The exploring needle, which may be termed a "magnetoscope" or indicator of magnetism, as distinguished from a "magnetometer" which measures the quantity, was an ordinary short, light, compass needle, strongly magnetized and loosely supported on a pivot. While the dynamos were running and the magnets fully excited, this needle was moved about in the space surrounding different parts of the magnets and the machine frame. If the case containing the needle be turned so that the needle is always perpendicular to its pivot, thus allowing it to turn as if on a ball and socket joint, the needle will take the direction of the lines of force in this space. By moving it systematically all around the different parts of the machine, and by plotting the direction of the needle on outline drawings of the machine, the directions of the lines of force may be readily indicated. To explore the curved paths of the lines of force the needle may be held near to any particular part of the frame and then moved continually in the direction in which the farther end points, that is as the direction of the needle changes the direction in which it is moved must be changed so as always to conform with that to which the needle points. The path which it describes will then be that of the particular line of force. In this way the curvature and the two terminals of an external line of force can readily be determined and plotted with all due accuracy, as the needle is always a tangent or short cord to that curve, and where the needle points directly to the iron when held closely to it, it indicates the point where the line enters or leaves the iron. By shaking the needle to cause it to oscillate, a rough approximation can be obtained of the intensity of the field or the number of lines of force at different places. Great care should be taken not to move the needle too fast, as the lines of force in some machines make such short curves that the needle is demagnetized and even reversed in polarity before it has time to turn on its pivot. It is necessary, on account of this possible reversal of the magnetism, to test frequently its polarity at one of the machine poles, otherwise very queer and conflicting curves may be obtained.

The polarity of a magnet being usually represented by the signs + and —, the former indicating the north or north seeking pole, and the latter the south or south seeking pole, the direction which the external lines of force are conventionally assumed to have, is from + to —, that is, as if they emanated from the north pole of a magnet. If the compass needle or magnetoscope has an arrow head on its north end, the direction of this arrow will always show the direction of the lines of force of the field which is being explored.

It will greatly facilitate the examination and plotting of these curves to remember that every line of force appears to make a closed curve which encircles the wire through which the exciting current flows. This will also enable one to interpolate the probable return paths of the lines in the iron where their presence cannot be ascertained by means of a needle otherwise than by their external manifestations. All lines which do not pass from the pole pieces to the armature core and are therefore not cut by the armature coils, are wasted and represent leakage.

In the accompanying diagrams the probable return paths of a few of the lines of force in the iron parts have been indicated, and it is believed they are correct. The drawings may not in all cases represent the exact proportions of the frame, as they are copied from mere rough note-book sketches.

The first machine examined was the large Edison "Jumbo." Figure 1 shows the results obtained, copied from the

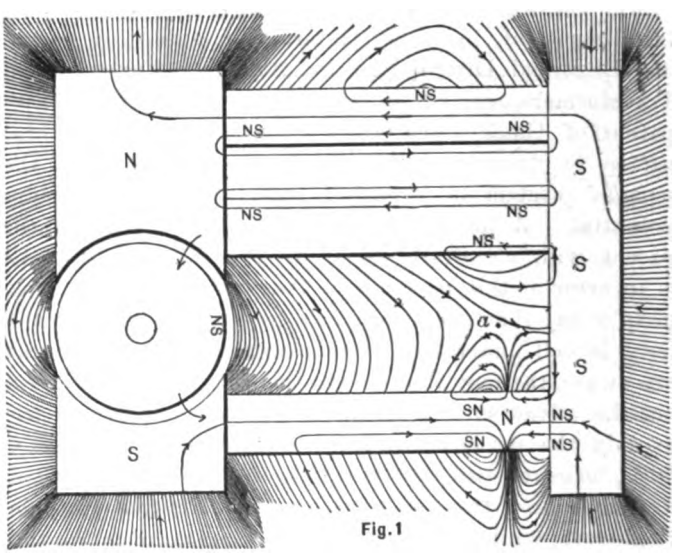

Fig. 1

rough sketches. As is well known, the frame of this machine is unsymmetrical, consisting of two horizontal sets of cylindrical, parallel magnets in the upper part, and one set in the lower. Each set consisting of four magnets, there were altogether eight magnets in the upper part and four in the lower. From this unequal distribution alone, it might have been supposed that either there would be considerable leakage of the excess of magnetism of the upper sets of magnets, the lower ones presenting only half the cross-section of iron, or that if the upper ones were only half saturated in order not to over-saturate the lower, there were more magnets in the upper part than required to produce the needed magnetism. The coil of each lower magnet was found to be connected in series with the two above it, thus forming a series of three coils; these series groups were then connected in multiple arc with one another, forming a series-multiple group of three in series and four in multiple. If, therefore, the number of turns of wire was the same in each of the upper and lower coils, the upper half of the machine must have received twice the amount of magnetism that the lower had. From the external lines of force this appears in a measure to have been the case. The exploration of this field showed a somewhat peculiar distribution of magnetism which it was at first thought might be due partly to reversals of polarity of the exploring needle, but repeated examinations during which the needle was frequently tested for

Digitized by Google

polarity, showed that the results were quite correct, as might have been shown *á priori*, had it been known that the total ampere-turns in the upper part were much greater than those in the lower.

Beginning first with the upper pole-piece marked N, the usual intense leakage was observed on the surfaces and at the corners, and especially at the pole-piece projections, magnetically shunting the armature. Passing next along the upper magnet the first neutral point marked N S was found beyond the middle, the lines of force on the other side of it, entering instead of emanating from the cores, as before. Passing next to the upper end of the yoke-piece a strong south pole was found. The lower one of the upper magnets was found to be similar on its lower side, to the upper side of the upper magnet, only that the neutral point was nearer the yoke-piece than before,—neutral point being understood to mean a point where the two poles are exactly equal in intensity and where, therefore, the external lines of force are parallel to the cores. In a normal, straight bar magnet, the neutral point will always be in the middle, and might be termed the magnetic middle of a magnet, which in a normally proportioned bar magnet should coincide with its linear, axial middle.

In the space between these two upper parallel magnets, it was found that the lines of force were quite straight along their whole length, and parallel to the magnets, but in the opposite direction to their course in the cores. In other words, these two like magnets were neutral along their whole length on the sides facing each other. This might be considered as another proof that in two such parallel like coils ending in the same pole-piece, those parts of the coils which are nearest each other neutralize one another as far as the useful magnetism of the pole-piece is concerned; it will be noticed that these parallel lines of force when continued, as shown, through the cores, encircle those portions of the coils.

Passing next down the yoke-piece it was found that instead of being neutral in the middle, as usual, with poles at each end, it was a strong south pole along its whole length with no signs of a neutral point at any place. This is no doubt accounted for by the great excess of magnetism of the upper magnets over that in the lower.

The south or lower pole-piece was quite similar to the north, showing the usual intense leakage on all sides and corners and especially at the pole-piece projections.

Passing finally to the lowest magnet a very peculiar result was obtained, which was at first discredited, but upon repeated and careful exploring it was found to be verified. A short distance from the right hand end there was a very intense north pole, the lines of force being at that point quite perpendicular to the coil for a short distance, as shown, and afterwards branching out to the right and left, finally entering the iron again. Between this point and the yoke-piece, there was, of course, a neutral point, marked N S, and on the left hand side, also quite near to it, another neutral point of opposite polarity, marked S N. These two neutral points situated so very near a strong pole, created a very curious field, the most interesting part of which is that lying above them where the lines come together with those of the magnet above it. At this point, *a*, marked by a dot, it will be noticed that the lines which come together make four sharp turns as though there was something at this point which did not permit the lines to pass through but which reflected them somewhat as rays of light are reflected from a mirror. A needle held at this point acts as though it were uncertain in which direction to point, and if moved about this point even for very short distances, it will have very decided but quite different directions, as will be seen from the arrows which show the direction of the needle when in the respective lines of force. If a very short needle could be placed exactly at this point it would act similarly to a body balanced in unstable equilibrium, the slightest movement from this position causing the needle to deflect in a certain definite direction. Such points might therefore be termed "points of unstable magnetism," or "points of magnetic deflection having four poles," as there are four general directions of the lines of force in the vicinity of this point. Their characteristic peculiarity is that the needle is very apt to have its polarity reversed when moved through them, the explanation of which is, no doubt, that the lines of force make such abrupt curves that their direction through the needle is reversed before it has time to turn on its pivot.

In a few places the probable courses of the lines of force through the iron itself, have been indicated. It is not possible to determine this definitely with the aid of a needle only, but from the nature of the field surrounding the iron and from the general laws of lines of force, it is very likely that the courses indicated are correct.

From the results obtained in the exploration of the field of this dynamo, the following conclusions may be drawn: Two similar parallel magnets, like those in the upper part, ending in the same pole and yoke-piece, are not to be recommended as there is considerable leakage between them. When the general form of the magnets for a dynamo is that of a simple U magnet, it should if possible be symmetrical magnetically as in an ordinary horse-shoe magnet. The magnetism of that part of the lower magnet between the letter *n* and the yoke-piece, is in the opposite direction to that generated by the ampere-turns on this part, from which it appears that the magnetism from a certain number of ampere-turns on other parts of the magnet is consumed in first neutralizing that in this part and then reversing it; it appears from the strong north pole on the lower magnet that the economy in the magnetism from the ampere-turns is poor, the reason being apparently in the unsymmetrical distribution of the iron and coils. As most of the lines of force shown in the figure do not pass through the armature, they represent leakage or wasted magnetism.

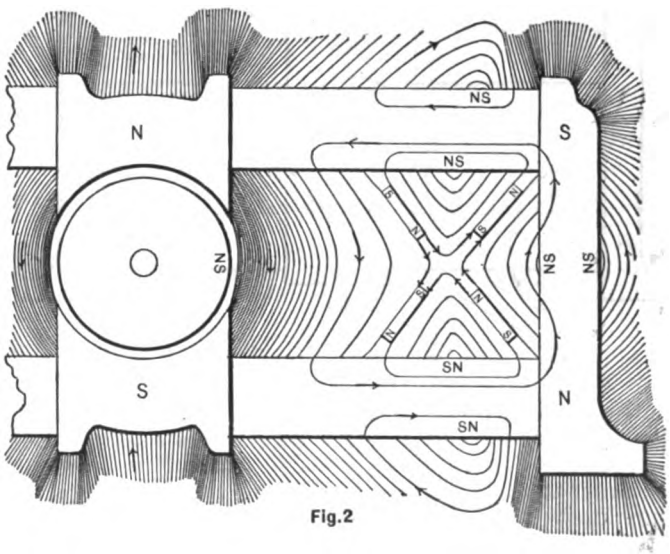

Fig.2

Figure 2 shows one-half of a normally proportioned Weston machine, the general type of frame being used also by numerous other makers. The field surrounding this frame appears to be quite symmetrical above and below, which in fact would naturally follow from the symmetrical distribution of the iron and the magnetizing coils. The two neutral points on the upper and lower surfaces of the same magnet were not directly above each other, that on the outside surface being nearer the yoke-piece. Both the upper and lower coils showed strong poles at each end. The yoke-piece has strong poles at its ends and neutral points in the middle. No portions of the coils have reversed magnetism in them, which is no doubt due to the symmetrical distribution of the magnetism. A point of "unstable magnetism" or of "magnetic deflection" was found in this machine also, differing from the one observed

Digitized by Google

in the Edison machine in the fact that the lines of force around it were symmetrically distributed. The general character of the field at such a point is more clearly shown in this machine. The upper and lower lines of force having opposite directions or opposite polarity, will, according to the laws of lines of force, attract each other, forming sharp curves at their nearest point; the same is true of the lines on the right and left hand sides of this point thus forming the four curves shown. The field at this point is similar to that produced by four bar magnets placed in the position shown, the opposite ones having like poles toward each other. It will be noticed that this point is bounded by four neutral points (one of which is in the armature) alternating with four poles, the successive neutral points and poles being alternately of opposite polarity, a neutral point being considered to be a point in the magnetic circuit around which the external lines of force are parallel to the axis, as described before. This is also true of that point in the Edison machine, only that the distribution is not as regular as in the Weston. In both these machines, and probably in all others having such U magnets with two coils, the complete iron circuit of the useful lines of force, beginning at one pole-piece thence successively through one magnet, the yoke-piece, the other magnet, the other pole-piece, and finally returning through the armature, includes four alternately opposite poles, separated by four neutral points of alternately opposite polarity, the polarity of the neutral points being indicated by N S or S N respectively. If the entire U magnet were made in the form of a circle wound over its whole length with coils, like a Faraday induction coil, and cut at one point for inserting the armature as in the Sir Wm. Thomson and the Mather machines, it is possible that this succession of poles and, therefore, also the point of magnetic deflection, would disappear.

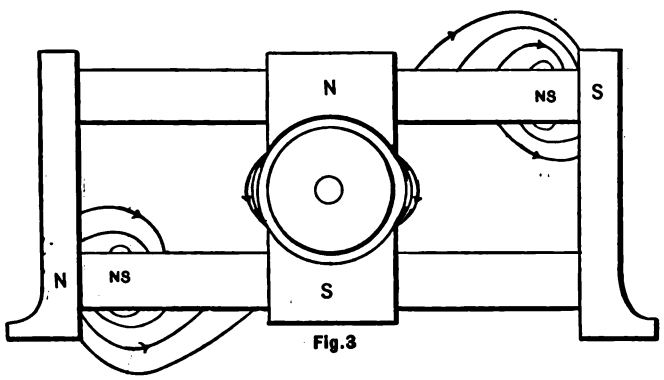

Fig.3

Figure 3 shows a Sprague motor in which two neutral points were found near the far ends of two alternate coils, while none appeared to exist on the other coils. Unfavorable circumstances prevented the further examination of this machine, but it is quite probable that it would prove to be similar to the Edison machine in figure 1, as there appeared to be two series-wound coils on two alternate magnets, and two shunt coils on the other two, which, unless the ampere-turns were equal in both, would cause unequal distribution of magnetism; the location of the two neutral points, as shown, indicates that this may have been the case with this particular machine while it was being examined. The unsymmetrical distribution is probably intentional in this machine, to accomplish certain results.

Figure 4 shows the results obtained from a Van Depoele machine, the frame of which is of an entirely different class from those already shown. Only one-half is shown here; the coils surround the large massive cores which terminate each in one pole-piece. On the upper and lower side of the frame are two flat pieces which were presumably intended for yoke pieces to magnetically connect the south pole at the right hand end of the one core with the north pole at the other end of the other core. The exploration of the field, however, indicates that it performs the entirely different and very objectionable function of magnetically shunting the armature by inducing the otherwise useful lines of force to leave the edge of the north pole-piece and return through this intended yoke-piece to the south or right hand end of the magnet, thus acting as a superfluous and objectionable yoke-piece to the two ends of the same magnet; the lines of force which should pass through the armature are therefore shunted off to one side. Furthermore, that portion of this flat piece which lies directly above the two pole-piece projections marked S and N, appears to short circuit, magnetically, these two pole pieces, or in other words, it magnetically shunts the armature, as a portion of the lines of force which should pass through the armature are led off around it and are, therefore, wasted. If this is as it appears to be, it might be better to omit these pieces altogether or to make them of some diamagnetic material.

The strongest leakage appears at the two pole-piece projections, the leakage being into the intended yoke-piece. This leakage extends along the side of the coil, nearly to the neutral point N S, which is near the farther end. The yoke-piece also exhibits a neutral point nearly above the one in the magnet and of the same polarity. As might be supposed, there is very intense leakage from the ends of the machine, the right hand end in the figure being a very strong south pole. But the leakage at this place does not

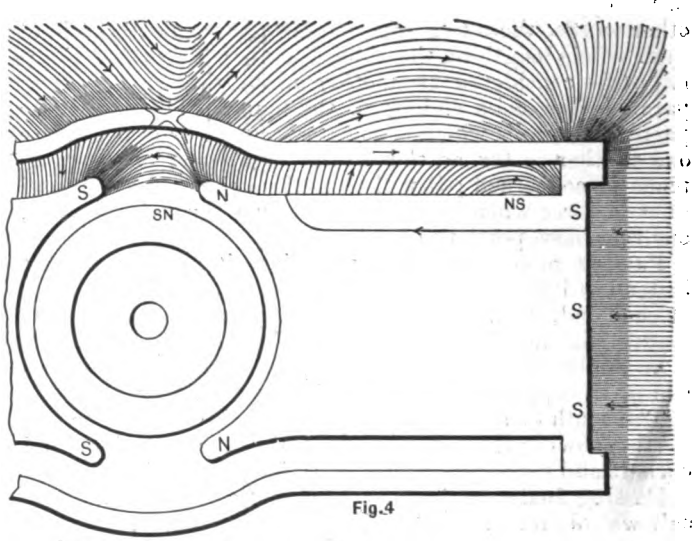

Fig.4

necessarily represent wasted magnetism, as most of the lines of force which escape here no doubt pass through the armature after passing through the core of the magnet, and are therefore not wasted; their return course, however, is to a great extent through the air, thus making open circuit magnets as distinguished from closed circuit or iron-clad magnets in which the lines pass through iron along their whole course, and as the magnetic resistance of air is much greater than that of iron (according to Kapp 720 times that of iron) the magnetism must be weakened considerably in passing through so much air in its return circuit.

A peculiar field was noticed outside of the yoke-piece almost directly above the middle of the machine. In moving the exploring needle horizontally at this place it suddenly made an abrupt turn of about 90° and over, indicating a sharp turn of the lines of force at this point. Further examinations indicated that the lines of force had the direction as shown at this point, which can readily be explained on the assumption that there exists in the iron of the yoke-piece directly below these sharp curves, a point of deflection of magnetism or point of unstable magnetism as it was termed above, which has been indicated in the figure by four short curves. Not only do the lines of force all around this point indicate its presence, but in a very similar machine (figure 7) the same point was shown

Digitized by Google

to exist in nearly the same relative position, being in this case in the air instead of in the iron, and its existence could therefore be determined definitely. If lines of force form closed circuits in themselves it is probable that those which are deflected downward to this point without entering the iron, are the return circuits of those which leak out at the two ends of the machine.

The field around the Thomson-Houston machine, shown in figures 5, 6 and 7, proved to be one of the most interesting, some of the curves being of a very peculiar nature. The magnetism was so intense in several places and the lines made such sharp turns that the exploring needle was repeatedly reversed in polarity during the examination, thus giving absurd results. It was not until the needle was repeatedly tested for polarity, and all results obtained with a reversed needle discarded, that any conclusive results could be obtained. The test was furthermore rendered difficult at first by the fact that the direction of the lines of force could not be tested in one plane only as in the other machines, as they curved around in different planes in such a way as to make it difficult to represent their courses on the plane of the drawing. In order to be sure that the results were correct the writer recently repeated the tests very carefully on a new 30-light arc machine, and obtained the results shown in the figures, which are believed to be substantially correct.

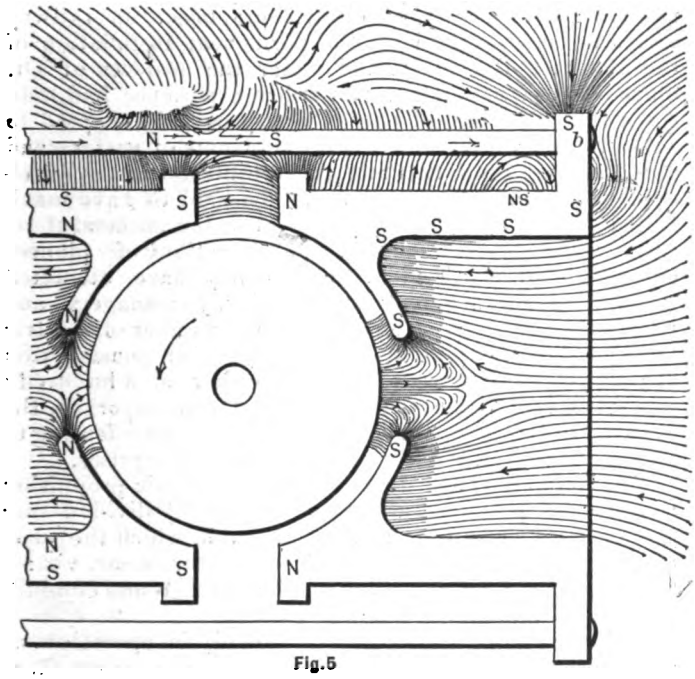

Fig.5

Figure 5 shows more than half of the vertical cross-section through the centre, taken perpendicularly to the shaft. The coils are wound around the large, hollow cast-iron cores which terminate at the armature and at the ends of the machine, one of which is shown complete. There is a round opening in the thin shell which embraces the right and left hand sides of the armature. The intended yoke-piece consists of a series of horizontal, round, wrought-iron bars, two of which are shown, one above and the other below the armature. It is, therefore, similar in general outline to the Van Depoele machine in figure 4, and the results should therefore agree to a certain extent with those shown in figure 4, which was found to be the case. As in the Van Depoele, there was a very strong leakage from the magnets to the yoke-piece, especially at and near the ends of the pole pieces, showing that many lines of force were magnetically shunted around the armature, and were therefore wasted. A neutral point was found near the right hand end of the core as shown. Immediately above the bars of the yoke-piece a strong field existed which showed the same polarity as that between the yoke and pole-piece, as indicated by the arrows, showing that these yoke-pieces had two strong poles one above each of the pole pieces, but of opposite polarity to the latter. Immediately above this field and represented by an open space, the needle exhibited that peculiar state of unstability, indicating a point of deflection, while above this space it again had a definite and decided direction. In this space, left blank on the figure, the lines were found to be perpendicular to the plane of the drawing, as is shown more clearly in figure 6, which is

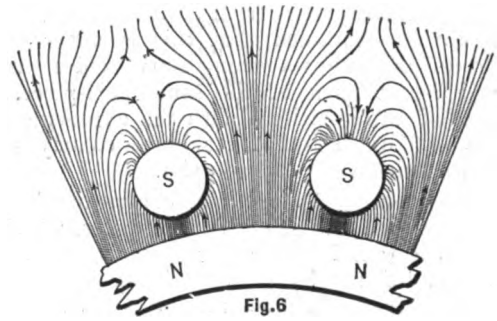

Fig.6

an enlarged vertical cross-section taken through the north pole-piece perpendicular to the bars of the yoke-piece. As shown in this figure the lines passed from the pole-piece into the yoke-piece on all sides, while the others from the pole-piece pass out into the air between the bars, thus forming above the bars at about the relative distance shown, a point of deflection having four poles, similar to that in the Edison and Weston machines.

Referring again to figure 5 a peculiar deflection of the lines was noticed almost directly above the south pole-piece, which was somewhat similar to that observed in the Van Depoele machine. It is possible that this was due to another point of deflection existing in the iron, as indicated in figure 5, with four or possibly six poles, but these curves in the iron itself are probable conjectures only. A similar deflection was noticed a few inches to the left of this point.

In moving the exploring needle vertically above the north pole-piece, it was found to turn abruptly through almost 180° a few inches above the yoke-piece, as shown by the arrows, while nearly above this there was a deflection similar to that in figure 4. This was found to be due to a point of deflection existing between the bars but above them, and is shown more clearly in figure 7, which

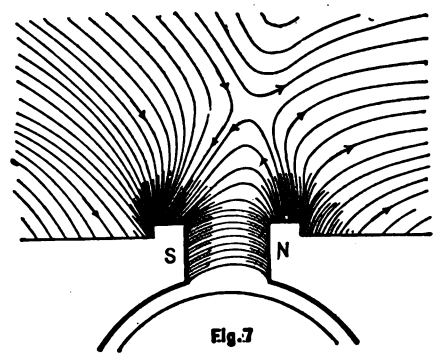

Fig.7

represents a portion of a section like figure 5, but between the bars. This point was clearly indicated by the needle, and assists in connection with figures 5 and 6, in explaining some of the peculiar curves noticed above that part of the yoke-piece which lies above the pole pieces in figure 5.

At the right hand end of the core the usual strong pole was found. A peculiar curving of the lines was noticed at *b*, where the rounded projections of the wrought-iron bars passed through the flanges. A possible explanation of this is, that the cast-iron flange is over-saturated to a greater extent than this projection of the wrought-iron bar, which, therefore, attracts the lines.

Following the surface of the core to the inside or hollow

Digitized by Google

portion, a weak south pole was found to exist on the cylindrical surface, while on the interior flange embracing the armature, the south pole was found to be very strong, the lines from it passing out through the open end. By placing a small needle very near the revolving armature and in the opening in the iron, it was found that many of the lines from this south pole entered the armature. From the general principles underlying all other dynamos, it would be supposed that the polarity of the pole-piece embracing the right hand half of the armature, was the same in all parts, but it appears from the external lines of force which could be examined, that this is not the case with this machine as there is a strong north and a strong south pole on different parts of the same pole-piece. Careful and repeated examinations with the exploring needle on the same and on different machines clearly shows this peculiar disposition of poles to exist.

Near the opening through the centre of the core, was another point of deflection with four poles, which in some machines was found to be very near the armature, as shown on the left hand side, while in others it was located several inches from the armature as shown on the right hand side. The lines of force at this point were very intense, and their curved directions were very decided, for this reason it was found that a very short needle had to be used and that it had to be moved about very slowly to prevent it from having its polarity reversed before it could respond to the change of direction. By moving the needle rapidly from the armature through this point of deflection, its polarity can readily be reversed, and it will then point in the same direction as it did before passing the point, thus making it appear as if there was no point of deflection. Moving the needle toward the armature will not reverse it so readily as these curves are less abrupt.

The lines of force at this point appear to oscillate very rapidly, which is probably due to the pulsating character of the magnetizing current. If, therefore, a small induction coil in the form of a simple coil of copper wire, be held concentric with this opening in the core and near to it, an alternating current would no doubt be induced in it. A telephone in series with this coil will indicate the presence of such alternating currents by a buzzing sound, the note emitted being apparently dependent on the speed and number of coils of the armature.

It is quite probable that the curves shown in all these figures would change very much with different degrees of saturation. A careful study of the curves of each machine at regularly increasing degrees of saturation, might lead to a determination of the best proportions and shapes of the iron parts.

Figures 4 and 5 are good illustrations of how not to proportion the parts when the best economy of magnetization is desired. At the same time it must not be forgotten that the energy used to excite the magnetism is for the best machines only a few per cent. of the whole output, and that, therefore, any improvements in the frame that would economize magnetism would only lessen this already small fraction, and possibly in some cases economize material. Other conditions may be of so much more importance as to make an increase in the economy of magnetism of little significance in comparison. The fact that the Thomson-Houston machines are used in such large numbers, shows that great economy of magnetism is not one of the most important points about a machine.

It is often represented as a good feature of a machine that its magnets are very powerful and will hold very heavy weights; a little consideration, however, will show that such external magnetism, especially when at the pole pieces, represents leakage and waste, and, therefore, is an objectionable feature. It would be much more creditable to a designer of a machine to be able to show that when running with its full load the magnets will not even attract a small bunch of keys, all the magnetism being diverted into the armature where it is wanted.

From the nature of the fields surrounding a dynamo, as shown in the figures, the following general deductions may be made. That machines exhibit the following magnetic properties: Free north and south poles, neutral points of two different polarities, and points of deflection; the latter exist in the external fields but may possibly exist also in the iron itself; they generally appear as four curvatures of the lines of force towards and receding from one point, and are in that case enclosed by four free poles and four neutral points of alternately opposite polarity. That the lines of force in and around a magnet appear to have the following properties: Like lines repel, unlike lines attract each other; they never intersect; they appear to form circuits or paths closed in themselves and surrounding the current generating them; when not prevented by other forces they take the shortest distance between the iron parts. The illustrations of these statements in the special cases shown, is not offered as a proof of their correctness in all cases, they are given here only as general guides in exploring and plotting such fields.

OVERHEAD CONDUCTORS FOR ELECTRIC RAILWAYS.

Although some five years have elapsed since the commercial practicability of electric propulsion for railway cars was demonstrated by the permanent installation of the Portrush line in Ireland under the auspices of Dr. Siemens, yet it was not until further experience had indicated that this form of energy was peculiarly adapted to fulfill the somewhat exacting requirements of surface and street railway lines, that any general interest in the development of electric locomotion can be said to have manifested itself. More recently, however, the successful results which have attended the operation of pioneer enterprises of the kind in this country have attracted general attention among street railway managers and projectors; so much so indeed that the number of electric lines projected, chartered or actually under construction at the present time can fall but little short of a hundred; in fact a late issue of our esteemed contemporary, the *Street Railway Journal*, contained news items referring to no less than 50 different electric railway enterprises.

The methods or so-called systems of electric propulsion thus far in practical use, may be roughly divided into three classes, according to the manner in which the electric current is supplied to the electro motor or car, viz.:—the overhead or aerial conductor, the underground conduit, and the accumulator or storage battery.

Of the electric street railways already in operation, as well as those under construction, by far the larger share appear from the published statements to derive the electric power from an overhead conductor, erected and supported in much the same manner as an ordinary telegraph or electric light line. Each locomotor is provided with a contact device, called a "trolley" or "traveler," supported and running freely upon the overhead wire, and connected with the vehicle by means of a flexible conductor, which serves the two-fold purpose of conveying the electric current from the constantly charged conductor to the motor, and of pulling the trolley along the conductor as the vehicle moves forward upon the railway. This simple and effective device is quite inexpensive in first cost, and has been found to operate admirably, at least in all cases where the maximum rate of travel does not exceed 15 to 18 miles per hour, a speed which is quite sufficient to meet the requirements of ordinary suburban and street railway traffic.

The original conception of this method of supplying electricity to moving vehicles appears to date back at least as far as 1878, in which year Dr. Joseph R. Finney, a dentist then residing in Pittsburg, Pa., who had occupied

Digitized by Google

himself considerably with electrical investigations, invented a system of telegraphy designed to place moving railway trains in communication with the stations along the line, a problem which has since been worked out with great success, although in an entirely different way, by L. J. Phelps and others. Dr. Finney's railway telegraph of 1879 is illustrated in figure 1, in which A represents a car running upon a track, B; C is an electric conductor supported at the necessary intervals by posts, of which one is shown at D, provided with a horizontal arm, *d*. A yielding spring arm or bracket, C, which is curved as shown, grasps and sustains the conductor at its outer end, and is secured at its inner end, by means of insulators, *c'*, to the horizontal arm *d*.

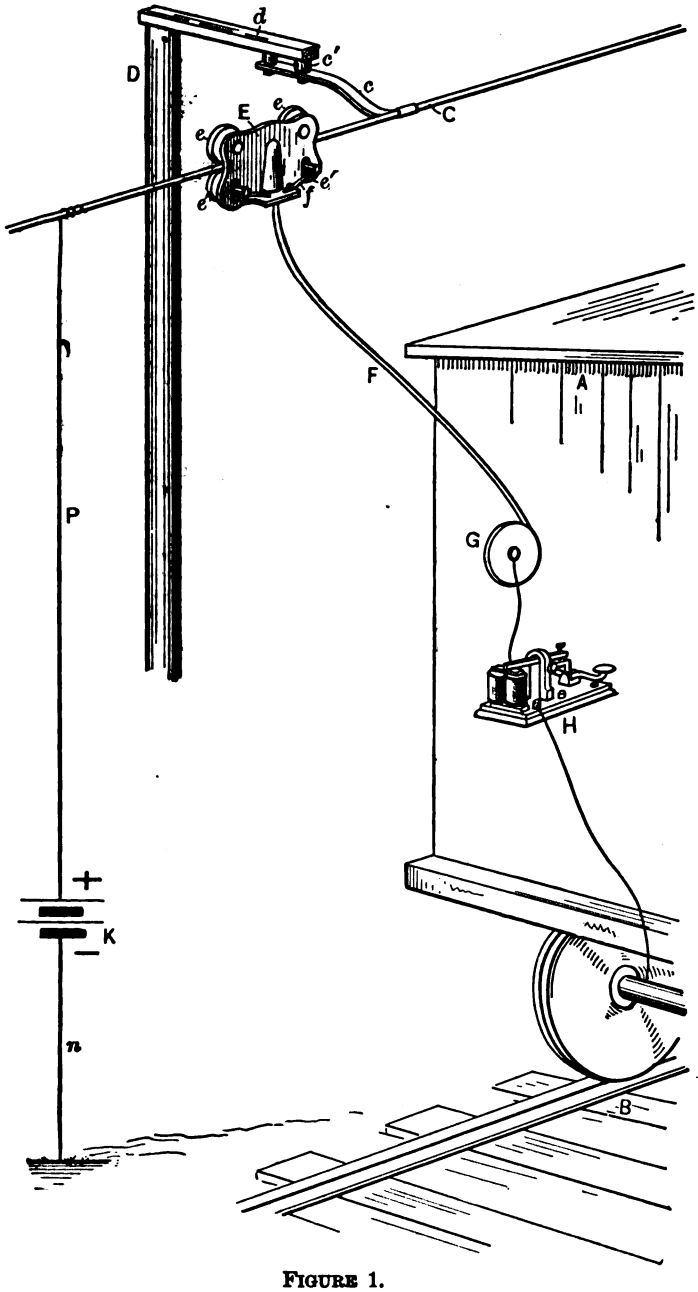

FIGURE 1.

The trolley or traveler consists of a metal frame, E, in the upper part of which are mounted two grooved or flanged wheels, *e*, *e*, adapted to run on the upper surface of the conductor C. In the same frame, directly underneath these, are two more similar grooved wheels, *e'*, *e'*, mounted in yielding or spring bearings, *f*, *f*. The effect of this arrangement is to cause the conductor C to be grasped firmly between the upper and lower sets of wheels, while at the same time the whole arrangement is left entirely free to move horizontally along the conductor, and to yield sufficiently to pass without difficulty the enlargements of the conductor C at its points of support. A generator of electricity, K, is connected to one terminal of the conductor C, in the manner diagramatically shown in the figure; that is to say the wire *p* connects the positive pole of the generator with the line conductor C, and the wire *n* connects the other pole with the earth. F is a flexible conductor, one end of which is attached mechanically and electrically by a pivot joint to the frame E of the trolley, while its other extremity is in electrical connection with an ordinary telegraphic apparatus, H, on board the car, and thence with the earth through the wheels and axles of the car and the rails of the track, B.

As in many cases it would not be practicable to carry the suspended conductor C at a uniform distance from the track, Dr. Finney provided a take-up device, G, consisting of a hollow spool having a coiled spring within it, upon which is wound a considerable length of the flexible conductor F. The spring keeps the connecting wire taut, but permits it, when required, to be drawn out to provide for any increase in distance between the track and the suspended conductor. The operation of receiving and sending telegraphic messages needs no detailed explanation, the novelty of the apparatus consisting for the most part in the devices whereby a continuous electric connection is maintained between the moving vehicle and a conducting wire extending approximately parallel to the track. This invention is of especial interest for the reason that it contains the essential principles of the most successful devices which have been employed for a similar purpose in the electric railway service, that is to say, the line wire, the trolley running thereupon, in such manner as to be *held in contact therewith by the pull of the car*, the electrical apparatus on board the car, and the take-up device for varying the length of the connecting conductor.[1]

The adaptation of this organization to the propulsion of street cars and like vehicles was but a short step in advance. Dr. Finney at once turned his attention in that direction; and, subsequently, having procured the necessary facilities, he filed an application for a patent on Feb. 15th, 1882.[2] In order to demonstrate to the public the feasibility of his invention, he fitted up an ordinary street car which was placed upon a track in Pittsburg, Pa., and successfully operated for some time early in the summer of 1882, in an experimental way. The general plan of the apparatus employed by Dr. Finney in this demonstration was similar to that of his railway telegraph, the essential difference consisting in the substitution for the telegraphic apparatus of an electric motor, properly geared to the axle of the car. He also introduced a number of subsidiary devices of more or less importance, among which may be mentioned an adjustable resistance, for decreasing the strength of current when the motor is running slowly, and a device for enabling one overhead conductor to cross another at an angle without interfering with the proper operation of the trollies. In his specification he describes the method of lighting the car by the same current that is employed to propel it, now in quite general use. He also sets forth the application of an independent motor to each car of a train, all of which are supplied with current from a single trolley and connecting conductor.

The following contemporary account of the above-mentioned experiment is extracted from the *Pittsburg Post* of August 21, 1882:

"The days of the street car horse are numbered."

This was a remark of a prominent iron manufacturer as he sat in a car propelled by an electric motor over a roughly built track in the yard adjoining the Union Line stable on Saturday evening last. What is more, his remark was apparently fully justified by what he saw and experienced. By a slight pressure on the contact lever the insignificant looking dynamo machine began to sparkle, and in an instant the little fly wheel was spin-

1. *Vide* Finney's U. S. patent, No. 281,552, of Aug. 24, 1880; and re-issue of same No. 10,232, Nov. 9, 1882.

2. U. S. patent No. 285,353, of Sept. 18, 1883.

Digitized by Google

ning around at the rate of 1,500 revolutions per minute. A gentle pull on the lever attached to the clutches set in motion the gearing connecting the motor with the car tracks, and away it went as steadily as though drawn by a pair of strong horses. To stop it required but the touch of a lever, and to reverse its motion it was only necessary to move the same lever to the opposite side of the short rack. Back and forth it went over the track until all were satisfied that the gentleman was about right when he said: "The days of the street car horse are numbered."

Dr. J. R. Finney, of Sixth avenue, the inventor of a number of very useful attachments to electric motors, some of which are of the most vital importance to the successful application of electric power to railways, had charge of the experiments. Some time since a similar machine was tried at the stables of the Citizen's Line, but the engine used to drive the dynamo machine, or generator, was not strong enough, yet the results were such as to convince those present that a fair trial was all that was necessary to sustain the inventor in all his claims.

An old style Citizen's Line car, weighing 6,000 pounds, which is nearly a ton heavier than the ones now in use, was fitted up for the experiment. This fitting up consisted mainly in tearing up enough of the floor to expose both axles of the trucks. The electro-motor is suspended below the level of the floor by a truss attachment to the truck. The only machinery in addition to a simple dynamo machine, rated at one and one-half h. p., is a series of gear wheels by which the car wheels are made to revolve once to 30 revolutions of the motor, which propels the car at the rate of 10 miles an hour.

The motor used is one of the Weston electric light machines manufactured at Newark, N. J., and is rated at one and one-half h. p. The machine was designed and built for the purpose of generating electricity, but in this case it is used to transform the electrical power into motion, and instead of sending out a current one is sent into it. Thus one machine is made to convert motion into electrical power which may be conveyed on conductors for miles and converted back into motion by another machine which is a perfect duplicate of the machine which produced the power. In this case the electricity is produced by a dynamo-electrical machine located in the Pittsburg Locomotive Works, and is conveyed on a wire suspended a short distance above the car on brackets attached to arms extending from posts set at the side of the track.

The current is led from this conductor to the motor by a contact traveler, consisting of a grooved pulley held loosely on the conductor by another pulley on the under side. The current is grounded through the wheels and rails, the latter having a continuous connection in order to make a more perfect ground. The traveler is drawn along the wire conductor by the car, and the pulleys are so adjusted that they pass over the brackets without breaking the contact, furnishing a constant and steady supply of electric power to the machine which it transforms into motion just as the old fashioned mill wheel converts the weight of water into motion and transmits it through the proper gearing to the burrs, which in turn converts wheat and corn into flour and meal. The entire machine could be placed in a medium sized shoe box, and does not exceed 300 pounds in weight.

While Dr. Finney had been prosecuting his experiments in this country, Dr. Siemens had evolved a similar system in Germany, the first published description of which is found in a German patent, October 13th, 1880;[3] it is also vaguely alluded to in one of his British patents,[4] and was crudely illustrated in various technical publications in the summer of 1881.[5] During the electrical exhibition of the same year in Paris, an electric railway embodying the principle was successfully installed and operated by Siemens, which transported a large number of passengers. Full descriptions of this railway were published in the technical periodicals of the time, but as we have seen, the essential principles of the Siemens plan of construction had already been anticipated in Finney's patent of August 24, 1880, and in the subsequent experiments of the same inventor.

In the meantime, however, another American inventor had appeared in the field, Eugene H. Cowles, of Cleveland, Ohio, who received a patent upon an application filed June 27th, 1881, for a system of electric propulsion,[6] essentially the same in its principle as that of Dr. Finney. Cowles' invention embraced the overhead suspended line wire, and a trolley consisting of two grooved wheels set in a frame, running on the upper surface of the line wire, and connected with the car by a flexible and longitudinally extensible conductor.

The records of the patent office show that an interference was subsequently declared, under the rules, between the application of Dr. Finney above referred to and the previously issued patent of Cowles, which ultimately resulted in a decision by the Examiner, June 25th, 1883, adjudging Finney to be the first and original inventor, and accordingly the fundamental patent was issued to him.[7]

Meanwhile Dr. Finney had succeeded in procuring sufficient pecuniary assistance to enable him to work out more completely some of the details of the invention. In 1882 he made some important improvements in the construction of the trolley, one of which consisted in constructing the wheels with broad radial flanges forming a deep groove as shown in figure 2, thus dispensing with the necessity of another wheel below the conductor. In connection with this change in the form of the wheel, the supporting bracket was made of a U-shape so as to support the conductor from beneath without interfering with the passage of the wheels. At the same time a modified form of take-up mechanism was devised, consisting of a spiral spring coiled around a rigid rod, as shown in the figure, a device not only more simple and cheap than the spool and coiled spring, but equally effective in cases where too great a variation in the length of the connecting conductor is not required.[8] These improvements, although matters of detail, were nevertheless quite important in a practical sense, as the proper movement of the trolley, as well as its constant and uninterrupted contact with the conductor, are essential to the satisfactory performance of the apparatus in actual service.

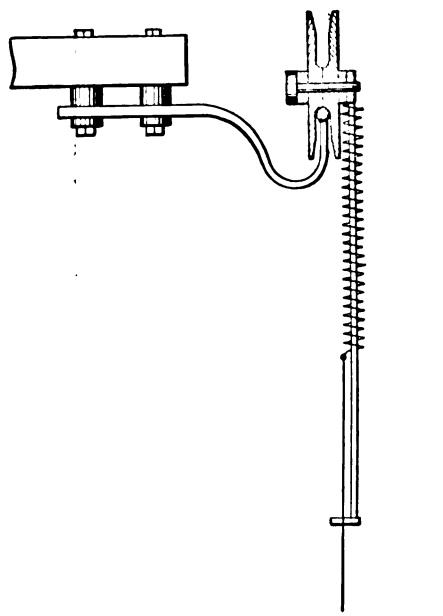

FIGURE 2.

Having thus worked out the application of this system to street railway service, Dr. Finney conceived that it might be applied with equal advantage to ordinary vehicles, running upon such pavements or roadways as are ordinarily found in the streets of cities and towns. In order to do this, it becomes necessary to employ two independent overhead conductors, placed at a uniform distance apart upon the same set of supports. Upon this double line, as upon an aerial railway, runs a four-wheeled trolley with deeply grooved wheels, the two wheels running on one line being properly insulated from the two running on the other line, the whole being united by means

3. Siemens and Halske, No. 15,057, dated January 20, 1880.

4. British patent No. 583, of February 10, 1880, patented by Carl H. Siemens, as a communication from Ernst Werner Siemens of Berlin, Germany.

5. *Lumiere Electrique* iv., 89; London *Electrician*, vii., 137.

6. U. S. patent of Eugene H. Cowles, No. 252,193, of January 10, 1882.

7. *Vide* note 2, *ante*.

8. J. R. Finney, United States patent, 268,476, December 5, 1882.

Digitized by Google

of a flexible double conductor with an electric motor geared to the rear wheels of the carriage. The front wheels are provided with a steering mechanism, resembling in principle the well-known device employed upon hook-and-ladder trucks. Dr. Finney proposed to extend a pair of conductors along each side of a street or thoroughfare, so that the driver of a vehicle, desiring to proceed in one direction or the other, would only need to connect his vehicle to the wire of the trolley upon the appropriate pair of conductors, and then by means of a switch on the carriage admit the electric current to the motor.[9]

Although this application of electric traction may appear at first sight to be a somewhat visionary one, yet a careful consideration of the matter will tend to show that such is by no means the case. Nothing is more probable than that the general use of electricity for the propulsion of street cars will be followed at no distant day by its application to the movement of ordinary vehicles upon much traveled roads or streets.

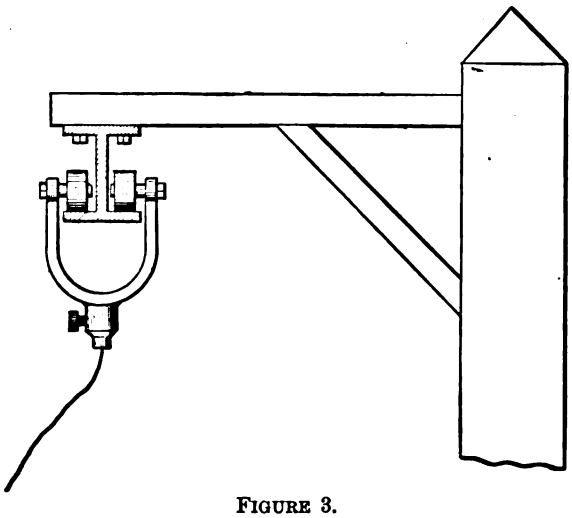

FIGURE 3.

Another modification in the arrangement of the overhead conductor, invented in 1882, is illustrated in figures 3 and 4. This is adapted for a more permanent structure, or for a line on which a very heavy traffic is to be provided for. It is also well adapted for use in mines, tunnels and similar situations. The conducting bar or strip of I-form, is bolted by its upper flange to suitable supports. The traveling contact runs on the lower flanges of the bar. The conductor may if preferred be made in two parts separated by an insulating strip, as shown in figure 4, in which case the earth need not be employed as a conductor.[10] One advantage of this construction is that the cars may be run at very high rate of speed without danger of derailing the trolley.

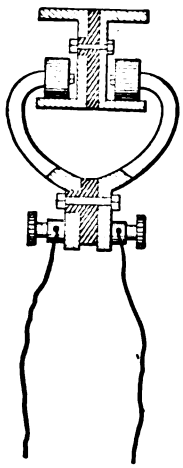

FIGURE 4.

An experimental electric railway was put up in Chicago, in February, 1883, by Charles J. Van Depoele, in which the conductor was laid between the rails and underneath the cars, the object being more particularly to test the efficiency of electric transmission from the stationary dynamo to the motor on the car, and so far as it went the demonstration appears to have been a very satisfactory one. At the Chicago Inter-State Fair in September, 1883, Van Depoele had a full-sized electric railway plant in operation, and carrying passengers, in which the positive and negative conductors were placed above the car, the latter being provided with brass contact-rollers so mounted as to press upwards against the under side of the conductors. In July, 1884, the same inventor exhibited an electric railway at Toronto, Ontario, 3,000 feet in length, making use of a conduit system below the track. The following year, 1885, a line one mile in length was fitted up by him in connection with the Toronto Industrial Exhibition, connecting the city street-car line with the exposition grounds. In this plant an overhead wire was employed, and the car was provided with a contact wheel carried on the end of a pivoted beam above the roof, which was fitted with a spring for pressing the wheel against the under side of the conductor. This car commenced running regularly on the 5th of September, and continued to do so during the period of the exposition, carrying a very large number of passengers. It is not necessary in the present case, to describe the details of this apparatus, which can be learned by those interested by consulting Mr. Van Depoele's patents.[11] One of these patents contains some novel and important details which deserves attention in connection with the suspension of overhead conductors at curves and angles, as for instance, in passing round the corner of a city block.[12] In the electric railways which have been successfully installed by the Van Depoele Electric Manufacturing Company at Montgomery, Ala.; Detroit and Port Huron, Mich.; Appleton, Wis., and Scranton, Penn., a trolley is employed running upon the top of the conductor and held in contact therewith by the pull of an extensible connecting cord, as in Finney's railway telegraph of 1878. The same system is used in the electric freight railway at East Boston, Mass., constructed by the Sprague Electric Railway and Motor Company, and in the Los Angeles, Cal., electric railway, and other lines constructed by the Daft Electric Light Company of New York.

The general adoption by the successful electric lines of the Finney apparatus, would seem to indicate that it has been found better adapted than most others to the conditions which are to be met with in actual work. The unrivaled economy, both in construction and operation, of the overhead conductor system, and its perfect adaptation to all the requirements of surface traction at a moderate rate of speed, are considerations which will more and more recommend it for that particular service, as its advantages are developed by experience.

9. J. R. Finney, United States patent, 270,186, of January 2, 1883.

10. J. R. Finney, United States patent, 346,990, August 10, 1886.

11. C. J. Van Depoele, United States patents, Nos. 331,585, December 1, 1885, and 334,062, January 12, 1886.

12. C. J. Van Depoele, United States patent No. 336,453, of February 16, 1886.

ELECTRICAL DISTRIBUTION BY ALTERNATING CURRENTS AND TRANSFORMERS.[1]

BY RANKIN KENNEDY.

(Concluded from page 262.)

TRANSFORMERS.—(CONTINUED.)

A VERY simple and most convenient form of transformer employed by me in some experiments in 1885, consists of a laminated Siemens shuttle-wound armature, s, in figure 15, half size. On this was wound 40 turns of No. 12 wire as a secondary, *c*, *d*, and over this 800 turns No. 24 silk covered wire as a primary, *a*, *b*, the length of the armature being about six inches. This form gives very good results for self-regulation and economy, and I use it generally for distribution purposes for small installations, say up to one or one and one-half horse power.

The outer sheathing may be of iron wire or of iron discs, and should be made so that the armature may be withdrawn for repairs.

Figure 16 shows the construction of the large transformers employed by me to raise the pressure of the electric energy at the generating station; it is built up entirely of hoop iron and bound together by bolts as shown. The primary coils and the secondary coils are wound on a

1. From the *Electrical Review* (London).

Digitized by Google

mould and then slipped on; the thick wire, which is in this case the primary, being first put on, and the secondary or fine wire slipped over it; finally, the strips of iron are

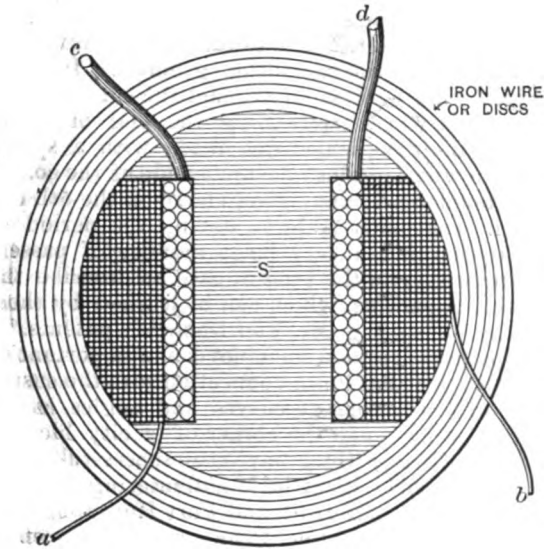

Fig. 15

placed on the ends and this closes the magnetic circuit. The lamination and ventilation in this form are very perfect.

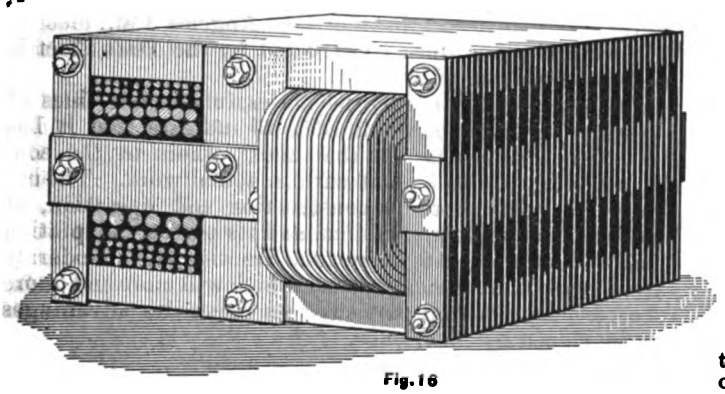

Fig. 16

The Ferranti transformers, figure 17, end view, and figure 18, side elevation partly in section, are also built entirely of hoop iron. The hoops are laid out in four bundles,

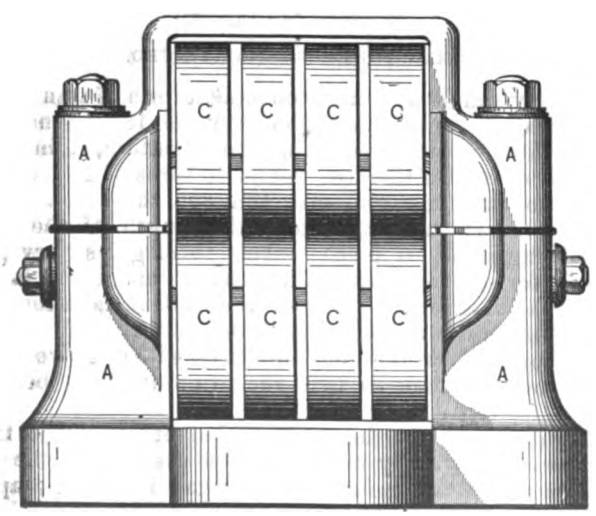

Fig. 17

C, C, C, C, figure 17, straight and close together; the thick secondary wire, D, D, figure 18, is wound on over the middle portion of the bundles of hoop iron, and over this thick wire the fine primary wire is slipped in sections which have been previously wound on a mould. The hoop iron bundles are then divided at X, X, figure 18, into halves, one-half bending up over the top and the other bending down under the bottom, thus closing the magnetic circuit; finally, the whole is enclosed in a cast iron shell A, A. The lamination in this construction is hardly perfect as the flat side of the iron is presented to the penetration of the lines of force, but altogether it is a very practicable construction.

There are many other forms of transformers, but as they are all similar in principle and are merely simple modifications of the leading types herein described, they are not of sufficient interest to occupy space here.

In America, the parallel system and the closed magnetic circuit transformer have been introduced by the Sun Elec-

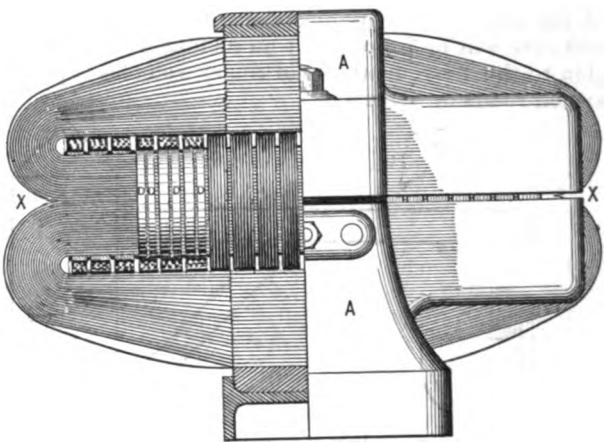

Fig. 18

tric Co., of Woburn, Mass., under the name of "Mr. Slattery's system," and also by the Westinghouse company, of Pittsburg.

Slattery's system embraces a simple ring converter the same as my 1883 converter.

The Westinghouse company have obtained the patent of Gaulard and Gibbs in America, the claims in which I give here complete.

1. The hereinbefore-described art or method of electrical distribution and conversion, which consists in establishing in a closed electric circuit, a current of alternate and equal positive and negative potential, producing by the influence of such current an inductive field of alternate polarity, and thereby inducing in translating devices situated in an independent closed circuit traversing such field, a similar alternating secondary current of greater quantity and less potential than the originating or producing current.

2. In a system of electrical distribution, an inductorium or converter in which the length of that portion of the conductor traversed by the primary current within the magnetic field created by itself, exceeds the length within the same field of the conductor traversed by the secondary current, in combination with a dynamo-electric generator producing alternating electric currents or pulsations of equal potential and duration, and translating devices actuated by said secondary current.

3. In a system of electrical distribution, an inductorium or converter, in which the resistance of that portion of the conductor traversed by the primary current within the magnetic field created by itself, exceeds the resistance of that portion of the conductor traversed by the secondary current which lies within said field, in combination with a dynamo-electric generator producing alternating currents or pulsations of equal potential and duration, and translating devices actuated by said secondary current.

4. In a system of electrical distribution, a dynamo-electric machine, organized for the production of alternate positive and negative currents, equal to each other in potential and duration, in combination with the primary circuit of an inductorium or converter organized to induce in its secondary circuit alternating currents of lower potential and greater quantity than those of the primary circuit, and one or more translating devices actuated by said secondary currents.

5. In a system of electrical distribution, the combination of an inductorium or converter, having its primary and secondary circuits constantly closed, a dynamo-electric generator for producing alternating currents of equal potential and duration included in said primary circuit, and one or more translating de-

Digitized by Google

vices included in said closed secondary circuit, substantially as set forth.

These claims construed into simple language mean simply that Gaulard and Gibbs claim to be the only true inventors of the parallel system of working potential transformers at constant E. M. F. in the mains. The patent is dated October, 1886.[2]

Judging from recent utterances in America, where the introduction of this system has created a somewhat amusing flutter among the electrical fraternity, the distinctions existing between the two systems, series and parallel, are not yet recognized, for the simple reason that the parallel system with the potential transformer has been bodily imported by them from Britain, in a complete and perfect form. The series system has never been tried in America, and therefore they have none of the failures attending attempts to work that system. The parallel system has been a great success, but it was just as great a success in Europe two years ago.

I shall not take up the consideration of the actions in the transformer. From a magnetic point of view they are exceedingly interesting, in fact the consideration of the magnetic effects and actions give us an entirely new and wider view of magnetism than can be obtained from the consideration of any other electro-magnetic instrument or machine. We shall also take note of the rapidly increasing practical applications of the transformer to purposes other than the distribution of electric lighting.

The numbers of modifications of the closed magnetic circuit is very great, in fact any form of dynamo armature makes a good transformer; thus, besides the forms already described, we can use a laminated drum armature of Siemens type with an outer iron sheathing, or better still, an armature of the same type with projecting teeth, such as the Weston armature, with an outer iron wire, or plate, sheathing, and thus form a subdivided transformer. Pole armatures of the old Lontin type may be also used with success when properly laminated with an outer sheathing, as in figure 19. The two conductors are wound on the

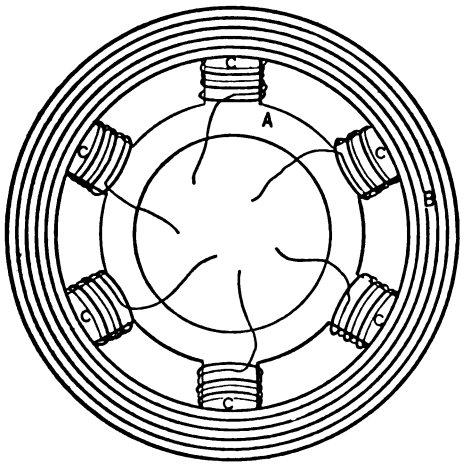

Fig. 19

poles as shown; A is an end view of the laminated iron core with C, C, C, C, and B is the iron sheathing. All these modifications are equally efficient and perfect self-regulators, and the only question to be decided by the maker is which form is the cheapest to manufacture; the question for the intending buyer of transformers is which form is the easiest to keep in repair and cheapest in first cost.

Enough has been said about the construction of transformers to show that it is one of the simplest pieces of electro-magnetic apparatus imaginable. Simply, it consists of two insulated electric conductors combined with an iron magnetic conductor. The only room for improvement lay in this iron conductor, and the experience gained in dynamo building is all applicable in this direction.

We may now enquire into the practical rules for the construction of transformers. Hitherto no definite numerical rules have been published. Transformers have received most elaborate treatment in the hands of mathematicians, and a vast array of formulæ could be here introduced with a view to elucidate the theory of the construction, but I don't think that would be of any use to practical electrical engineers. In this place I am persuaded that a few simple rules within the capacity of any intelligent workman will be much more useful.

In making a transformer the first question is, of course, what form of iron magnetic circuit is it to have? The choice lies between the Zipernowski type or the subdivided type, as these have by far the lowest magnetic resistance and can be perfectly laminated, being equally efficient and self-regulating. The choice must be decided on the score of practical convenience for repairs and ease of manufacture. After deciding upon the best form of iron organ for the transformer, the most important question next, is what length of wire shall be required for primary and secondary conductors? Upon these lengths depend the most important function of self-regulation and economy in the transformer.

The length must be found for self-regulation according to the laws—

1. When no work is being done in the secondary circuit there should be no current in the primary circuit—that is, the counter pressure in the primary must be equal to the primary pressure, or very nearly equal thereto.

2. As the current increases in the secondary circuit the current in the primary should increase proportionally in the ratio of the transformer—that is, the counter pressure in the primary should fall as work is increased in the secondary.

Here I may observe that there is an impression abroad that the mere employment of the fine wire as primary and the thick as secondary in an induction coil was a great invention made only recently, I am certain that this has been tried by innumerable experimenters during the past 20 years.

To be of any use the wires must be wound to satisfy the laws, irrespective of their thickness or thinness, and then they must be employed in combination with main conductors at constant pressure, and if more than one is to be operated at one time they must be connected in parallel order, and they must be constructed accurately with a fixed ratio. All these imperative requirements are not stated, described or claimed in any one patent yet issued, and yet none of them can be neglected in a system of distribution by alternating currents and transformers.

As the rules for finding the correct lengths, and the reasons for them are obvious enough to those who could follow, I will simply state them as:—

Rule 1.—To find the lengths of the primary and secondary conductors in a transformer for reducing from a high to a low pressure, divide the primary pressure by the coefficient of induction in the primary circuit (that is, by the induction in volts per foot of wire), this will give the length in feet of wire for primary.

Rule 2.—Divide the secondary pressure by the coefficient of induction in volts per foot, this will give length in feet of wire for secondary.

In the best transformers working with about 200 alternations per second this coefficient is very high and averages about two volts per foot, and that may be taken as the figure for use in the above rules; for example:—

Given a primary pressure of 1,200 volts, and the required secondary pressure given as 80 volts, what lengths of primary and secondary wire should be employed? Answer, $\frac{1,200}{2} = 600$ feet for primary, $\frac{80}{2} = 40$ feet for secondary.

2. The specification and claims of Messrs. Gaulard and Gibbs's U. S. patent afford no basis for this statement. So far as we are aware, no claim has ever been put forth either by or in behalf of Gaulard and Gibbs, to the method of working in parallel at constant potential.—[Editor.]

Digitized by Google

These lengths do not include wire not under induction.

If the alternations are not so rapid this coefficient becomes less. It might be argued from this fact that as it is perfectly easy to make the alternations very much more rapid than 200 per second, that, say 500 or 1,000 alternations should be adopted. There is a limit to that; as the alternations increase in number per minute the losses in the transformer increase, and that fact often accounts for different efficiencies being found for the same transformer by different experimenters—the one, perhaps, has employed the alternations for which the transformer was calculated, the other has employed slower alternations, and therefore, no agreement could be come to. It is, therefore, necessary to ascertain by experiment the coefficient of induction for each type of transformer at a given alternation rate. In transformers with long magnetic circuits, common to all the coils of wire, the coefficient will not be higher than 1.5, and often falls as low as one foot per volt.

Practically this coefficient may be found by taking the given alternating pressure having the given rate of alternations through an approximately correct length of primary wire on the transformer, say a length calculated at two volts per foot (the secondary circuit being open or not yet wound on), and measuring the current produced through this length. If no measurable current is observable then that is the correct length; there should be some current, of course, say, perhaps, two per cent. of the maximum current. If the coefficient of induction is less than that calculated upon, a considerable current passes in the primary when no secondary current is flowing. The primary wire must, in that case, be increased in length until this initial current disappears, or becomes so small that it is of no account, and then the length of secondary can be calculated by the rule.

Rule 3.—The ratio of a transformer is found by dividing the primary pressure by the secondary pressure, thus in my previous example—

$$\frac{1,200}{80} = 15.$$

15 would be said to be the ratio of that transformer, and thus

	Primary.		Secondary.
The pressures are to each other as	15	to	1
The lengths of conductors to each other as	15	"	1
The cross-section of conductors to each other as	1	"	15
The currents to each other as	1	"	15

The iron conductor of magnetic force should not at any time be anywhere near half saturation; it should therefore have large cross sections, and data for calculating its size may be obtained from dynamo builders.

The application of these rules to transformers for *raising* the pressure is obvious, only I may point out that in this case the short thick wire is the primary, and the coefficient of induction must be found for it, and the lengths calculated from this coefficient. Of course the initial current allowable in the primary circuit may be comparatively large (the initial current is the current flowing in primary with no current in the secondary circuit), thus we may have in the transformer primary circuit, with full load on the secondary, 100 amperes at 100 volts pressure; while with no load in the secondary we may have only five amperes, or only five per cent. of initial current; of course, by increasing the length of the wire, we lower this initial current, but we also lower the coefficient of induction per foot of wire.

Those who wish to study the exact science of the subject should study Mascart and Joubert's work, Hopkinson and Ewing's publication, and the articles by Kapp, now appearing in *Industries*.

Its high efficiency, combined with great simplicity of construction, is bound to recommend the transformer for many applications not yet thought of; it must prove a powerful machine in the hands of electricians when they become better acquainted with it practically. The application of the transformer to electric welding is an example in point. I have recently employed a small transformer for multiplying or dividing the readings of an alternating voltmeter, and by this means I can employ any ordinary alternating current voltmeter, reading between, say, 10 volts and 120 volts, to measure alternating E. M. F. up to any pressure, say 5,000 volts.

A Cardew voltmeter combined with a transformer whose ratio is say 20 to 1 may be connected to the secondary conductor, or, more properly speaking, to the low pressure conductor; the pressure to be measured is connected to the high pressure conductors, then the readings of the voltmeter have only to be multiplied by the ratio 20 to give the exact pressure in the primary; if the voltmeter indicates 100, then the pressure is 2,000, and so on for any pressure. If we use a transformer having a ratio of 50 to 1, we can just as easily measure 5,000 volts. By this means it is possible to multiply extremely low E. M. F.'s and measure them on ordinary voltmeters. The ratio is constant enough for all practical measurements of alternating E. M. F.'s.

In conclusion, I may say that these notes on this interesting subject have not been very carefully arranged, and might have been extended to some advantage on some of the points, but the subject is already a large one, and requires the expenditure of valuable time in writing up even without any polishing.

I hope, however, to return to the subject, with the kind permission of the editors of the *Electrical Review*.

Something might be said about the dynamos, but there is really no new feature to notice about the later alternating dynamos; they are all old types built with the experience and knowledge obtained from continuous current dynamo evolution.

The rule being to make the magnetic field as powerful as possible and to shorten the length of wire in the armature as much as possible; as the field gets stronger and the armature wire shorter, so the dynamo improves.

PRACTICAL NOTES CONCERNING THE CONSTRUCTION, USE AND MANAGEMENT OF STORAGE BATTERIES.[1]

BY A. RECKENZAUN.

(Continued from page 266.)

ANALOGY BETWEEN HYDRAULIC AND ELECTRIC ACCUMULATORS.

Some 40 years ago the first hydraulic crane was erected on a quay at Newcastle, and this crane had to work with a constant head of water 200 feet high in order to produce a pressure of about 90 pounds per square inch upon the rams which moved the chains. To keep this pressure up, the water had to be pumped into a tank at the height indicated. It was some time after this, when Sir. W. Armstrong discovered that if water be pumped into a pipe or cylinder fitted with a movable plunger, and if that plunger be loaded with weights, the enclosed water was in exactly the same mechanical condition as if it were in communication with a reservoir many feet above it. In either case the water is under pressure, whether that condition is caused by a load of metal or a load of water. The vessel which stored the water has been called an accumulator, because it actually accumulated the power of the steam engine, and it returned that power at a constant rate whenever requisite. The pumps worked by the steam engine supply the accumulator with water as fast, or nearly as fast, as the same is consumed by the hydraulic rams. So long as there is any water at all within such a

1. From the *Electrical Review* (London).

Digitized by Google

cylinder containing a weighted plunger, there will be a constant pressure maintained. The stroke of the plunger, or the diameter of the cylinder, or, more correctly, the *capacity* of this hydraulic accumulator, had to be arranged in accordance with the supply and demand of water under pressure. If the demand is regular and the supply somewhat irregular, then this capacity must be large in proportion.

In the case of electric accumulators we have also to proportion the *capacity* according to the irregularity of the dynamo, or electric "pump," but that irregularity must be kept within very narrow limits; whereas the number of strokes of the water pump may for a few moments be reduced to an exceedingly low number; so long as the smallest quantity of fluid remains in the accumulator there will be a constant pressure due to the weight, whilst in the case of the storage battery a comparatively small reduction of speed on the part of the charging apparatus will cause a discharge of electricity from the accumulator into the generator. It is this great sensitiveness of the dynamo which renders the secondary battery statically unlike the hydraulic accumulator. When the supply ceases, the pressure of the hydraulic accumulator is practically constant until the last drop of water is squeezed out; with the battery, on the other hand, the pressure decreases considerably before the cells are entirely discharged.

CONSTRUCTIVE DETAILS.—THE FAURE BATTERY.

We come now to the most difficult, and at the same time, the most important part of our subject. The success or failure of a secondary battery depends upon minute and apparently unimportant details of construction. One could scarcely imagine a simpler apparatus than, for instance, an original "Faure" battery, which consisted of sheets of lead, the surfaces of which were covered with a thin paste of red lead and the whole rolled up with some cloth or felt to keep them apart. This thing worked admirably for a short time, and the invention was hailed with enthusiasm even by the highest scientific authorities when first introduced into this country. Hundreds of tons of this crude form of storage battery were manufactured when it was still in that immature, untried condition. Instead of commencing careful experiments and gradually developing the invention of M. Faure, people at once began to manufacture these cells wholesale, and it was only after thousands of pounds were spent, and after many months' fruitless endeavors, that the great defects in this form of storage battery were discovered. Its utility was found to be great, but it was far from perfect. We agreed with Dr. Lodge when he wrote a few years ago that some day it may perhaps be recognized, that because it can be shown that a thing will be extremely useful when perfect, it does not follow that it has already attained that perfection, that, indeed, probabilities based on historical developments are enormously against such abnormal and instantaneous maturity, and that the careful nursing and rearing necessary to healthy maturity are better given in the seclusion of laboratory and study than in the excited and heated atmosphere of the stock exchange.

It is doubtless recognized already that all preliminary operations are better conducted on a scale smaller than the wholesale manufacturing one. In developing a new industry there are scientific difficulties to overcome, and there are manufacturing difficulties. By scientific difficulties, we mean such as the determination of weak points, the best way of strengthening them, and generally the discovery of theoretically the best modes of effecting the object in view; the manufacturing difficulties begin with questions of expediency and economy—how most cheaply and satisfactorily to carry out the indications of theory, to obtain this or that material—and includes the organization of a system of manufacture, of division of labor, of machine tools, which shall enable the work to be done with economy, security and despatch. Over-haste in the preliminary stages caused both these sets of difficulties to be tackled together, and thereby threw a grievous burden on all concerned. All these untoward conditions have storage batteries experienced; and to say that they have not fulfilled the hopes of their early promoters, is no more than to say that those hopes were untimely and unreasonable.

The main difficulties which were found with the Faure battery were firstly, that the red lead paste would not adhere to the smooth sheet lead; it became detached in flakes; secondly, the wrappings of cloth or felt became corroded with the acid; and thirdly, the separating material, being comparatively dense, prevented the circulation of the electrolyte; the acid was in consequence exhausted in some parts and concentrated in others, altogether there was too little of it in the immediate vicinity of the plates. There was greater activity consequently in some parts of a plate than in others.

The detachment of the oxide coating was not entirely due to a want of cohesion between it and the smooth lead plate. Sheets with roughened surfaces were tried with no better results. The peeling off is partly due to the fact that the acid penetrates through the pores of the coating and creeps up between it and the sheet lead when sulphate is produced, and patches of the substance are by this means rendered inactive owing to the insulating properties of lead sulphate. The main evil, however, lies in a different direction, and this has probably never been explained; it is this, the paste expands during oxidation and also when sulphating; the minute particles must then travel along upon the surface of the metallic support, which does not expand, and thereby diminish the adhesion of the paste which was originally smeared upon the lead plate and dried before placing it into the box with acid.

EXPANSION OF OXIDES AND BUCKLING.

We have already stated, in the last paragraph, that the paste of red lead expands during oxidation and also while sulphating. We have mentioned that this increase of volume was the main cause of the detachment of the oxide from its flat lead support. It is this expansion of the active material that has been the cause of most of the trouble experienced with lead storage batteries. Whether the paste is packed into holes, grooves, corrugations, slots or reticulations, the process of enlargement in positive plates goes on, and buckling, falling out of oxide, and other deteriorations follow. The cause is known, but it is somewhat difficult to find a remedy. We cannot prevent expansion or do away with the natural properties of oxides, but we must aim at the production of plates in which an increase of volume can occur without distorting the shape of the electrodes. The materials, active and conducting, must be distributed in such a manner that any growth shall take place equally all over the surface. Until this can be accomplished, *buckling* and bending is sure to take place with the disastrous results well known to makers and users of secondary batteries. Oxidation of the positive plates must occur when the cells are being charged, and sulphating takes place whilst they are discharged. In the case of perforated plates the paste expands and with it the lead support during oxidation. The lead support has practically no elasticity, therefore the paste would become loose during the discharge were it not for the compensating effects brought about by the sulphate which is formed simultaneously. If the active material did return to its original volume, then the contact between it and the metallic support would be almost destroyed. Positive plates grow slowly but continually; their volume increases gradually; and since the paste does not return to its original shape, old and well used plates must be more porous than new ones. This greater porosity may account for the increased capacity of positive plates which have been in use for a long time.

The volume of oxides relatively to their metals has

Digitized by Google

been calculated by chemists. When 207 grammes or 18.44 cubic centimeters of lead unite with 16 grammes of oxygen to form Pb O, the increment of volume is found to be 2.6 cubic centimeters. In the oxidation of 112 grammes of iron to $Fe_2 O_3$, the increment of volume is 8.1 or 3×2.7 *c. c.*; thus 16 grammes of oxygen in chemical union with heavy metals occupy 2.6 to 2.7 cubic centimeters.

In practice, with battery plates, only a portion of the active material becomes oxidized, therefore the above proportions, which refer to atomic volumes, cannot be applied unless we know how many molecules there are exposed to the action of oxygen. If every atom of the lead could be utilized, then the increase of volume from Pb to Pb O in the first stage of oxidation would alone amount to $\frac{2.6}{18.44} = 14$ per cent.; this increment, if Pb = 1, to Pb O, would be 1.14; to $Pb O_2 = 1.28$, and so on. We have found that a positive plate which had a surface of $9 \times 10 = 90$ square inches when new, grew to 94.76 square inches after one year's daily use; we only measured the expansion in the direction of length and width; older plates of the same description showed an increase of from 90 square inches when new, to 97 square inches when almost worn out. A positive plate is considered to be worn out when its lead support or grid is broken or cracked to a considerable extent. Metallic lead becomes very brittle in course of time when exposed to the electrolytic action of oxygen, and a period arrives when the grid refuses to extend itself with the increasing volume of the paste. The bars of the grid crack, and these cracks gradually open out, and then the whole plate becomes unserviceable.

We endeavored to strengthen the plates by providing stout ribs, diagonally, parallel to the sides, and in various other ways, but we found that this only aggravated the evil. The portions of the grid which were surrounded by strong ribs, expanded and buckled, in any direction that offered the least mechanical resistance, whilst the ribs themselves did not elongate in the same ratio.

This method of stiffening grids had to be abandoned, and, finally, we came to the conclusion that any attempt to strengthen positive plates by mechanical means was fruitless. We must allow the paste free scope for expansion in every direction, and this can be done by making the grid or supporting frame of equal strength throughout, and the softer the conducting material the better for the plates. It was suggested, some five years ago, to strengthen the lead grid by providing an alloy of antimony and lead, whereby a much stiffer plate could be obtained. This plan was tried by the Electrical Power Storage Company in the year 1882, but the results were not entirely satisfactory, and the reason for this partial failure will be explained hereafter.

When the cells are partially or wholly discharged, and then left to stand idle, sulphate is being formed, and buckling sets in at a comparatively rapid rate, even with well-constructed plates. To counteract this tendency, secondary batteries should always be kept well charged. If one face of a plate is slightly more active than the other, it is natural that the most active side will expand first, and thus become convex, and when buckling has once begun it continues very easily, and eventually the paste, for want of elasticity, will break and tumble out.

All sorts of devices have been tried to prevent buckling, and consequent contact between neighboring plates. Wooden frames were tried, grids of ebonite, India rubber, and other insulating materials have been used; bands were stretched round the plates, and, finally, rubber plugs, spaced at short distances all over the plates, have been adopted to keep them flat. All these and other kinds of separators, however, do not remove the *tendency* to buckling or unequal expansion; such supports are merely a rude remedy, but they do not do away with the cause. There is only one rational cure, and that is to make the grids of equal strength all over, apply the paste with care, so that it should not be more dense in one part than another, and then leave the plates as free and unconstrained as possible by giving them room for expansion. These are manufacturing details. As regards maintenance, we have already stated that excessive sulphating can be prevented by never allowing discharged cells to stand idle in acid for any length of time.

(*To be continued.*)

DYNAMIC ELECTRICITY.

BY CARL HERING.

(Continued from page 253.)

CHAPTER VIII.—FIELD MAGNET COILS.—(CONTINUED.)

RECURRING to the formula for calculating the smallest allowable diameter of the wire directly from the required number of ampere-turns, namely:

$$d = \sqrt{\frac{.875\ (a\ W)\ l_m}{v}}$$

it is evident that its application is not limited to the particular case before stated, but that in general, it may be used in any case if only the ampere-turns, mean length of one winding, and the potential at the ends of the coils, are known; as the formula does not contain the current as one of its factors, it is not necessary to know this current to calculate the diameter of the wire. For instance, if only the potential of the exciter, and not its current, is fixed, or if a number of machines are to be excited in common by one exciter, the fields being all in multiple arc with one another, the diameter of the wire can be calculated without first knowing the current. After determining the diameter of the wire any suitable current may then be chosen, and when divided into the number of ampere-turns required, will give the number of windings of this wire. But this current is not only limited by other considerations to a certain range of values, which range may sometimes be quite great, but in most cases there will be one particular current which will, considering everything, be the most desirable in each particular case.

The principal considerations which limit the choice of this current, are the following. Suppose a very great current is used, and, therefore, a correspondingly small number of windings, then, as the potential remains the same, the energy in the coils will increase with the current and may exceed the heating limit, as the radiating surface is fixed by the known dimensions of the coil. The greatest allowable current should, therefore, be based on the heating limit and may be calculated from the surface of the coil and the potential, by one of the heating formulæ before given. But besides this heating limit, it may be restricted to a still smaller value by the desired efficiency of the machine, for it is evident that if the energy lost in the magnet coils be relatively great the efficiency of the machine will be poor. To calculate the current from this limitation, determine how much energy in watts may be allotted to the coils and divide this by the known potential, thus giving the current. The amount of energy to be used in the coils will vary greatly with different machines; in large well built machines it may be made as low as 1.5 to 2% of the whole output, while in small, cheap machines it often is as high as 10 to 20%. In large well proportioned machines this is the most important limitation for the current, provided, of course, that it does not exceed the heating limit as before described. As an increase of the current is accompanied by a nearly proportionate decrease in the quantity of wire, and therefore, also in its cost, it is evident that when cheapness of construction is of more importance than efficiency, the current should be taken as great as the heating limit will allow in order to economize wire, while if efficiency is the

Digitized by Google

chief consideration the current should be as small as practicable. The smallest value which the current may have depends on the greatest amount of space which the coil may occupy and on the cost of the wire. If the current be taken too small the number of turns required to give the necessary ampere-turns, may be so great as to occupy more space than is allowed for the coil; furthermore, the depth of winding may then be so great that the mean length of one winding will become much greater than what was assumed, and consequently the resistance of the coil will be too great to take its required current at the given potential. This minimum value of the current can readily be ascertained by calculating how may turns of the wire determined from the formula may be wound in the space allotted for the coil, and dividing this number of turns into the required ampere-turns, thus giving the current. It may be preferable in some cases not to decrease the current to this smallest value on account of the expense of the wire. As the formula for calculating the diameter of the wire gives that value which the wire must have to enable at least the required number of ampere-turns to be generated, it follows that this is the smallest diameter which the wire may have; any larger size than this may be used without fear of increasing the resistance by the increased mean length of one winding due to the greater depth of winding.

From these considerations it will be seen that there is no fixed rule for determining the winding of the coils, but that there are certain limiting conditions differing in their relative importance in different machines, which give the designer some latitude in selecting the winding. As all these limitations can be readily calculated as described, from the known data, the most direct method of determining the winding of the coils appears to be, to calculate the limiting values for the current, the number of windings and the diameter of the wire, and then to choose such values within these limitations as will best meet the desired requirements of cheapness in first cost on the one hand, and good efficiency on the other. For instance, from the formula determine the smallest diameter which the wire can have; from the heating limit, the surface of the coil and the potential, determine the greatest current; from the desired efficiency determine again the greatest current; from the coil space and least diameter of wire determine the greatest number of windings permissible; from these, the best proportions will, in most cases, become self evident. Should some of the limiting values be found to overlap, as for instance, if the smallest allowable current should be found to be greater than the maximum, it shows that the conditions cannot all be met by those proportions of the machine.

To illustrate this by an actual case, let it be required to determine the winding for a certain machine which generates 50 amperes and 100 volts. The exciter also has 100 volts, which is equivalent to assuming the first to be a self-exciting shunt machine. The frame is of the type shown in figure 26 (p. 186) with four coils. The cores are oval, the cross-section being 9x3 inches, having a periphery of 20 inches; length of cores 10 inches. From the test with temporary coils it was found that 15,000 ampere-turns were required to excite the magnets while the machine was generating the required potential and current. To calculate the smallest diameter which the wire may have it is necessary to find the mean length of one turn. Assuming a depth of winding of about one-third of $3 = 1$ inch, the mean length l_m will be, from the formula

$$l_m = l + \frac{2\,c\,l}{a+b} = 23.3 \text{ inches.}$$

The diameter of the wire will therefore be

$$d = \sqrt{\frac{.875\,(a\,W)\,l_m}{v}} = 61.8 \text{ mils,}$$

assuming a factor of safety of 20% by making $v = 80$ instead of 100. The nearest gauge number corresponding to this is No. 14 B. & S. which has a diameter of 64 mils. This is therefore the smallest wire which can be used, and is entirely independent of the current which may be chosen.

To determine next the greatest current from the heating limit, it is necessary to know the surface of the coils. The lengths of the outside and inside windings will be in the proportion

$$\frac{a+b+4c}{a+b} = \frac{9+3+4}{9+3} = \frac{16}{12} = \frac{4}{3}$$

in which a, and b, are the length and breadth of the oval and c, the assumed depth of winding, which in this case is one inch. The inside length being from measurement 20 inches, the outside will be $\frac{4}{3} \times 20 = 26.7$ inches; and as the coils are 10 inches long, all four will have a total surface of $26.7 \times 10 \times 4 = 1068$ square inches. From the heating formula the greatest permissible current, allowing a rise of 80° F., will be, E being 100 volts,

$$C = .36\,\frac{S}{E} = \frac{.36 \times 1068}{100} = 3.84 \text{ amperes.}$$

This should not be exceeded.

To ascertain next the greatest current considering the efficiency, determine what percentage of energy may be allotted to the magnets; as the machine is not large, six to seven per cent. should not be exceeded; assuming the latter gives 3.5 amperes as the greatest allowable current for that efficiency.

Finally, determine the least current or greatest number of windings from the coil space. A No. 14 B. & S. wire has an outside diameter of about 88 mils. As the coils are 10 inches long, there will be $\frac{10 \times 1000}{88} = 114$ turns per layer, and if the greatest allowable depth of winding is about one inch there will be $\frac{1 \times 1000}{88} = 11.4$ or about 12 layers making $114 \times 12 \times 4 = 5472$ windings on all four magnets. This gives for the least current $\frac{15000}{5472} = 2.75$ amperes, as there must be 15,000 ampere-turns. This current is considerably smaller than that obtained from the heating limit.

Summarizing these results, if the coils are to be wound as cheaply as possible, without regarding the efficiency, 3.8 amperes is the greatest permissible current. This gives $\frac{15000}{3.8} = 3950$ windings of No. 14 wire. On the other hand if the best efficiency is desired, the least possible current is 2.75 amperes, and 5472 windings of the same wire. As the cost of the wire of the same size, is approximately proportional to the number of turns, it will in the second case be $\frac{5472}{3950} = 1.4$ times as great as in the first case, while on the other hand, the percentages of energy in the coils will be 7.6 in the first and 5.5 in the second case. It is obvious that there would be no advantage in using a larger wire than No. 14, as the only apparent gain would be to reduce the resistance, thereby increasing the current and therefore decreasing the required number of turns or the length of the wire; but this current would be greater than 3.8 and would therefore increase the rise of temperature to more than 80° F. which was assumed to be the safe limit. On the other hand if a smaller wire than the one given by the formula were used the resistance would be so high that it would not be possible, with the same factor of safety, to generate the required number of ampere-turns in the limited coil space and with the given potential.

If coil spaces of the same dimensions be wound full with

Digitized by Google

wires differing in size in each case, the coils will have the following relative properties if the space occupied by the insulation is not considered. If d represents the diameter of the wire, the number of turns will be proportional to $\frac{1}{d^2}$, that is, for a wire having twice the diameter the number of turns will be one-quarter as great as before, or with half the diameter they will be four times as great; the resistance of the coils will be proportional to $\frac{1}{d^4}$. If the same number of ampere-turns are to be generated in each of these coils, the current must be proportional to d^2, and the electromotive force required to generate this current will be proportional to $\frac{1}{d^2}$ or to the number of turns; the energy in watts will then be the same in all the coils, and as the surface is the same, the temperature to which they will be raised by this current will also be the same. If instead of having the same number of ampere-turns the coils be subjected to the same electromotive force, as would be the case, for instance, in different coils for the same shunt machine, the current which will flow through them will be proportional to d^4, and the ampere-turns will therefore be proportional to d^2; the energy in watts being approximately equal to the current multiplied by the electromotive force, will then be proportional to the current (the electromotive force being the same) and will therefore be proportional to d^4, or to the square of the number of ampere-turns; as the surface is the same the temperature will also be proportional to d^4, or to the square of the number of ampere turns; furthermore, the energy required per ampere-turn or per line of force will be proportional to d^2. From this it will be seen that when subjected to the same electromotive force, any number of ampere-turns can be generated in a limited coil space by merely making the diameter of the wire great enough, but the heating of the coil will thereby be increased very rapidly so that a practical limit is soon reached, which may be determined from the heating formulæ; furthermore, the cost of generating the same amount of magnetism will increase as the square of the diameter, thus reducing the efficiency. If instead of having the ampere-turns, or the electromotive force the same in such coils, they have the same current passed through them, as for instance in different coils for the same series machine, they will have the following relative properties: the ampere-turns will be proportional to $\frac{1}{d^2}$ or to the number of turns; the electromotive force consumed by the current will be proportional to their resistance, and therefore to $\frac{1}{d^4}$; as the current is the same, the energy required and therefore also the temperature will be proportional to the electromotive force, or to the resistance, or to $\frac{1}{d^4}$; the energy required per ampere-turn or per line of force, thus representing the cost of generating the magnetism, will be proportional to $\frac{1}{d^2}$. What was said regarding an *increase* of diameter of wire for shunt machine, applies therefore equally well to a *decrease* of diameter for series machines.

From this it will be seen that it is desirable in many cases (for instance in shunt machines) to find the smallest diameter which the wire may have. The formula, mentioned above, for calculating the diameter gives the minimum value under the given conditions, namely, that its resistance shall be such as to enable the required number of ampere-turns to be generated with the limited potential, and with the given mean length of one turn. While a smaller diameter than this would make the resistance too high for the necessary current and therefore render the coil useless, a larger diameter could, of course, be used, provided it is not limited by other considerations.

It may sometimes require less calculation to determine the winding indirectly by trial calculations by assuming different sizes for the wire and calculating the resistance and number of windings for each case to find whether the required number of ampere-turns can be generated in them. While such a method may or may not be shorter it does not give the limiting values between which the designer can choose the one best suited to the case, nor does it indicate whether the best proportions have been arrived at, or whether any changes in the machine are advisable, or whether it is at all possible to meet the requirements. The direct method will therefore in most cases be found to be the shorter.

It is assumed that the dimensions of the frame, including the length and cross-section of the cores, have been determined as correctly as possible from the amount of magnetism required, prior to the determination of the winding of the coils. The calculated values of the diameter of the wire and of the necessary depth of winding, can therefore not be used to construct the cores from; they will however be found to be a convenient and reliable means of ascertaining whether the proportions of the cores and windings are the best, and if not, in what way they might be improved.

From the practical limitation to some of the proportions of the coils and from the general nature and size of the machine, it will readily be seen whether the calculated diameter of the wire is relatively small or large. Providing that the heating limit is not exceeded, and that the cores are not over-saturated more than is intended, then a relatively small value for the diameter of the wire indicates that either the ampere-turns are relatively small or that the potential is relatively great for those coils; in such cases a larger wire may be used if desired, provided the coil space is not too small, external resistance being added in case of a shunt machine to reduce the current to its former value. If on the other hand, the calculated diameter is relatively large, it indicates that either the magnet cores or the ampere-turns are relatively large, or that the potential is relatively small for those coils.

Similar deductions can also be made from the actual depth of winding as determined from the diameter of the wire, in distinction from the assumed depth. If, as before, the heating limit is not exceeded, and the cores are magnetized to the desired degree of saturation, then if the depth is found to be very small it indicates that the cores are too long, while if it is very great it indicates that they are overworked, being too short. It is understood, of course, that the depth of winding need not be limited in all cases to a certain proportion of the diameter of the core, the rule given above to this effect is, as described, to be used merely as a general guide in order to enable the mean length of one turn to be calculated approximately. In most cases it will no doubt be found to be a proper proportion, but there may be other considerations, such as the heating, the limited coil space or the length of core, which may necessitate a greater or less depth than that assumed; if such is the case it will be shown by the calculations.

Similarly if it is found that the energy required for exciting the magnets is relatively great, the magnets are poorly proportioned or overworked, while if the energy required is found to be relatively small it indicates that the magnets are not used to their full capacity, and might therefore be made smaller. Such general and obvious deductions from the proportions of the coils will often serve as a guide and will be particularly applicable for reconstructing and standardizing machines, and in designing from poorly proportioned machines as models.

In all these cases it has been assumed that the potential at the ends of the magnet coils was a fixed and limited amount, and that a choice of the current necessary to meet

Digitized by Google

the requirements was left to the designer; these are the conditions for shunt machines. If on the other hand the current is limited to a certain fixed value, as in series machines, while the potential consumed by the coils may be made anything that is required, the calculations of the coils from the ampere-turns is slightly different. The current and the ampere-turns being known at the outset the number of turns is their quotient. The diameter of the wire is then determined from the following limiting conditions: the limited coil space, the heating limit, and the desired efficiency of the magnets. The first may be determined approximately by multiplying the length of one coil by the allowable depth of winding, both in inches, and dividing this by the number of windings in one coil, the square root of this quotient is the diameter in inches including insulation; this is the maximum limit. The heating limit may be determined by finding the greatest allowable potential from the surface and the current in the formula already given, namely

$$E = .36\,\frac{S}{C},$$

which is then compared with the potential obtained from the desired efficiency; this latter, as described before, should be a certain percentage of the total voltage of the machine. From these two values the proper potential can then be chosen which will best meet the desired conditions of greatest cheapness of construction on the one hand (limited by the heating), or of best economy of energy on the other hand (limited by the efficiency). The diameter is then determined from this potential by the formula already given. This will give the smallest limiting value of the diameter. Or the diameter may be calculated directly for each of these two potentials giving two minimum values from which together with the maximum limit above given, the proper diameter can readily be chosen.

It is assumed herein that a machine is to be constructed which will generate a certain desired electromotive force and current. If, as is no doubt sometimes the case, the machine is built by guessing at the proportions and then running it to "see what it will give" such calculations as those described will not be necessary. But even in such cases the proper calculations made from the results of a test, may show whether the machine is running at its best or whether and how it could be improved in any of its parts.

Besides the formulæ already given, the following may sometimes be of use, especially as a check to determine the correctness of other calculations. Using the same letters and units as before, the resistance of the coils will be

$$R = .875\,\frac{W l_m}{d^2} = \frac{3.5\,W l_m}{4\,d^2}$$

at about 70° F.; every degree Fahrenheit increases the resistance about two-tenths of one per cent. (.2 per cent.). If the calculated resistance is found to be too great, owing to slight inaccuracies in the diameter or assumed conductivity of the copper, or other unavoidable causes, the diameter can, if the coil space permits, be made slightly larger without fear that the consequent increased length will again increase the resistance, as the latter will increase only slightly with a greater mean length of one turn, while it will be diminished greatly by a slightly larger diameter. The potential lost in the coils is equal to

$$v = Ra = .875\,\frac{a\,W l_m}{d^2} = \frac{3.5\,a\,W l_m}{4\,d^2}$$

The total length of wire, in feet, for all the coils may be calculated from the formulæ

$$L = \frac{W l_m}{12} = .0833\ W l_m.$$

If e is the length, in inches, of one coil, d_1, the outside diameter of the wire in mils including insulation, and n, the number of coils, the number of turns per layer in one coil will be

$$\frac{1000\,e}{d_1};$$

the number of turns per coil being $\frac{W}{n}$ and the depth of the winding being represented by c in inches, the number of layers will be

$$\frac{W d_1}{1000\,e\,n} \text{ or } \frac{1000\,c}{d_1},$$

or the thickness c, of the coil in inches will be approximately

$$c = \frac{W d_1^2}{1{,}000{,}000\,e\,n}.$$

The figures occurring in the formulæ for the heating of coils are based on the constants given by Prof. George Forbes in the paper before referred to. But as these constants may, and undoubtedly do, vary somewhat for different machines owing to their different general outlines, the ventilation, air blast from armature, exposed surfaces, etc., it is best whenever practicable to determine these constants for the particular style of machine, or for one similar in its cooling properties. This may readily be done by measuring the outside surface S, of the coils, finding their temperature T, in degrees Fahrenheit, after a long steady run with full load, and measuring the watts of energy W, which are consumed in the coils. Then $\frac{W}{T\,S}$ will be the constant to take the place of $\frac{1}{115}$ in the formula

$$W = \tfrac{1}{115}\,T\,S.$$

From this all the other heating formulæ can readily be deduced by substituting for W, its equivalents in terms of current, electromotive force or resistance. All heating formulæ are obviously only approximately correct owing to the greatly varying conditions, but if the limiting temperature is not taken too high, a moderate difference between the actual and the calculated heating will not be of any great importance.

The following formula by Brough, may sometimes be of use in calculating coils having a limited resistance. It is for determining the diameter d of the bare wire which, when insulated and wound to fill a limited coil space, will have the required resistance R. It is for circular coils only.

$$d = -i + \sqrt{i^2 + \sqrt{\frac{K\,e\,(A^2 - a^2)}{R}}}$$

in which i is the radial thickness of the insulation or *half* the increase in diameter due to insulation, e is the length of the coil space, A, the outer diameter of the circular coil, a the inner diameter, R the resistance of one coil, and K, the resistance of a piece of wire $\frac{\pi}{4}$ units long and one unit in diameter. All dimensions must be in the same units, either mils or inches. If they are all in inches, then K is about .000000687. For oval coils, which are by far the more common in dynamos, the writer has deduced the following similar formula in which, however, the quantities are given in the usual units, namely, d and i in mils, and the coil dimensions (c, depth, e, length and l_m mean length of one turn) in inches. It can be used for both circular or oval coils.

$$d = -i + \sqrt{i^2 + \sqrt{\frac{875000\,c\,e\,l_m}{R}}}$$

In winding the coils it is very important to insulate the wire carefully from the core and at the ends of the coil. One or two layers of strong, tough and flexible cardboard about .015 to .020 inch thick placed around the core, and the same or even more at the ends, prior to winding the wire, will, in most cases, be sufficient. It is well to soak the cardboard in paraffine or thin shellac to keep it from

Digitized by Google

absorbing moisture. When there are many layers, and particularly when very fine wire is used, it is well to place thin sheets of cardboard between every three or four layers, particularly under the last layer, in order to keep them smooth and regular. For the sake of appearance, the last layer should always be wound full, which can readily be done when there are a large number of turns, by simply omitting or adding the odd number of turns, but when the whole number of windings in the coil is comparatively small the odd number of turns should be wound in the next to the last layer, and the remaining space filled with cardboard, the last layer being then wound over all.

When the coils are oval it is well to wind them so that at the ends of the oval the wires lie in the position shown in figure 12, chapter v, instead of as shown in figure 13, as they may otherwise slip into the former position and thereby become loose, which should be carefully guarded against, as loose wires, by the vibrations of the machine, are apt to abrade their insulation.

The method of winding shown and described in chapter v, figure 14, bringing both beginning and end of the wire into the last or outer layer, may be used to advantage in magnet coils, but as these are generally wound in lathes it would be attended with such difficulties that it will, in most cases, be impracticable.

In the ordinary method of winding, the inner end of the wire which has to pass out at the end of the coil, should be very well insulated with two or three extra insulations where it passes the other wires. A strong, hard cord wound closely around this part of the wire and afterwards shellaced and taped, forms a very good insulation. This end should be secured firmly where it leaves the coil to prevent vibrations of the wire. It is well to take one turn with this wire in the outer layer in order that if it should break off short at the coil at any time a splice can readily be made.

When the wire is thick and has been bent by having been wound once before, it may readily be straightened by drawing it, while it is being wound, through a series of grooved rollers as shown in figure 31. The tension necessary in winding may also be adjusted by these rollers. The practice of hammering the wire straight after it is wound is very objectionable, and should be resorted to only when absolutely necessary, and then only with great care. An iron hammer should never be used for this except in connection with a piece of soft wood grooved at its end to fit the wire.

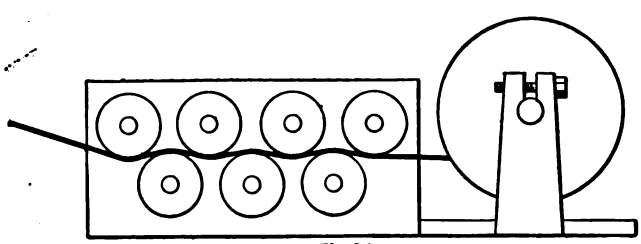

Fig. 31

If it is desired to measure the length of the wire as it is being wound, it may be passed between two rollers of known circumference with a thin layer of leather or rubber on the surface, and an ordinary speed counter attached to the shaft of one of them, the length being calculated from the circumference and number of turns of this roller. If the apparatus in figure 31 is used, the speed counter may be attached directly to one of these rollers.

Magnet coils should not be connected in multiple arc unless there is no alternative, as there may be an unequal distribution of the magnetism, unless both the resistance and the number of turns is the same.

It is evidently unnecessary, so far as polarity is concerned, to wind the coils in any particular direction, and they may, therefore, always be wound in the direction which is most convenient, as they may always be so connected with one another and with the binding posts of the machine that the magnets shall have the proper polarity. The only object in winding the coils in particular directions is, that the connections between the coils and with the binding posts may be as convenient and as short as possible for the sake of appearance. In applying Ampere's laws to determine the direction which the current must have in order to develop the required poles, it must be remembered to face the end of the coil. The current in the connecting wire between those ends of two coils which terminate in the same pole-piece, will describe the letter **U**, while that between those ends which terminate in the same yoke-piece, will describe the letter **S**.

In making the preliminary test to determine the required ampere-turns, it is well to examine the polarity of the pole pieces with a compass needle (being careful that the polarity of the needle is not reversed in doing so), in order that the finished machine may be connected to have the same polarity. In self-exciting machines it is also well to note the direction of rotation and of the current of the armature, in order that all the connections in the finished machine may be made correctly at first, as much time may thereby be saved, particularly for more completed connections, as in compound machines. In shunt or series machines, it is evident that with certain connections between the brushes and the magnet coils the machine will give absolutely no current.

As it is not always possible to carry out the specifications for a machine in all details, it is well to keep a complete record of all the parts and properties of each machine wherever they vary from the original determination or plans. Such records may often be of future use, especially for determining constants which may be of service in designing other machines, or in improving those already built.

(To be continued.)

EFFICIENCY TESTS OF A GAULARD AND GIBBS' TRANSFORMER.[1]

BY P. CARDEW, CAPTAIN R. E.

THE excellent articles by Mr. Kapp, on the determination of the lag of primary current behind impressed E. M. F., and of magnetization behind primary current in a transformer, have been of great service to me, as I happened just at the time that they appeared to be engaged in determining the efficiency of one of these instruments, specially wound and submitted for test by the company connected with Messrs. Gaulard & Gibbs. I was preparing to wrestle with the problem myself when I found this labor saved by the articles mentioned, and as a slight return for this benefit, I give herewith the tests taken with the lags worked out and expressed as angles, and the external efficiency deduced. The tests do not pretend to anything like exact accuracy, as time and the present importance of the question to the war department did not permit of elaborate precautions being taken. Nevertheless, and in spite of considerable variation in all the quantities measured, the resultant efficiencies are very close, and the sum of the angles φ and ψ still more strikingly close in all the tests. The turns of the primary and secondary conductors were to each other in the proportion of 4 : 5, which obviously would not be suitable for a practical instrument,

1. From *Industries* (London).

Digitized by Google

but which was very convenient for our means of measuring. The weight of the transformer was about 90 pounds.

The angle φ is the lag of primary current behind E. M. F., as used by Mr. Kapp in discussing a single magnetic coil. I think it is a pity that he called this ψ in discussing a transformer; ψ is the lag of magnetization behind primary current. The efficiency is

$$\frac{\text{Secondary current} \times \text{secondary E. M. F.}}{\text{Primary current} \times \text{primary E. M. F.} \times \cos \varphi}$$

The resistance of the two coils was: Primary, .023$^{\omega}$; secondary, .036$^{\omega}$. This indicates equal mass of each conductor, in which case the resistances should be to each other in the proportion of the square of the conversion factor, not in the simple proportion, as I think I have seen it stated. The calculated external efficiencies are certainly too high, for the following simple reason, as pointed out by Mr. Kapp, viz., whatever power is absorbed by the iron core should be expressed as current × E. M. F.; the current must oppose the magnetization, and its ampere-turns should be added to those of the secondary current in calculating ψ, making ψ greater and φ less than as now calculated. This, of course, will make the number of watts in the primary somewhat higher. It is quite hopeless, I think, to attempt this correction; but, from estimating the radiation from the core, I should put the power wasted at full load at about 2½ per cent., leaving an efficiency of conversion of 97.5 per cent.

However this may be, I consider the results undoubtedly show a very high efficiency for these transformers, and I must say that, in my opinion, great credit is due to Messrs. Gaulard & Gibbs, and the company connected with them, for what they have done in the face of every sort of discouragement to perfect the system, which I am convinced has a great future before it.

The interchange of energy between the transformer and the supplying circuit is a curious phenomenon. When φ is appreciable the transformer begins to return energy during a portion of each alternation, and when $\varphi = \frac{\pi}{2}$ the energy given to the transformer during one-quarter of an alternation is returned during the next quarter, except what is exhausted in heating the conductor. There is a sort of ebb and flow of tide enduring in the case of the last experiment but one, for about $\frac{1}{100}$th second, and only a little leaks out each time. In this experiment the calculated primary watts are 55.4, of which 40.57 are absorbed in the primary coil, and 15.4 in the secondary circuit, so that in this case we get an apparent efficiency of conversion of $\frac{55.97}{55.4}$, just over 100 per cent., but of course this should be reduced on account of the power absorbed by the iron core. The fact that the primary current absolutely rose to a higher value in this experiment as compared with the previous one is very curious.

The primary circuit was connected to a 32-magnet Wilde machine, the secondary circuit to 50 c. p. 60 volt lamps. In the first series the volts at machine were maintained constant by the engine driver altering his speed to suit the load, and the tests were taken on one Siemens electro-dynamometer and one Cardew voltmeter, by rapidly changing the instruments from one circuit to the other. In the second series an attempt was made to keep the speed constant by altering the strength of field in the machine; but as no suitable rheostat was available and the engine was not governed this could not be exactly effected, and the volts on the primary circuit show considerable variation. Two dynamometers and two voltmeters, however, were used, so that absolutely simultaneous readings were secured. In the third series no attempt was made to keep any value constant, but simultaneous readings were taken. The angle φ is the lag of primary current behind impressed E. M. F., ψ that of magnetization behind primary current; their sum as shown is in all cases nearly 90°.

EFFICIENCY TESTS OF A GAULARD & GIBBS' TRANSFORMER.

Table of Results.

	No. of lamps in secondary circuit.	Current. Primary.	Current. Secondary.	Volts. Primary.	Volts. Secondary.	Angles of Lag. φ	Angles of Lag. ψ	Angles of Lag. $\varphi + \psi$	External efficiency.
First series.....	20	55.3	40.6	50.5	61.	22° 26′	67°	89° 26′	95.9
	11	42.4	23.1	50.5	60.25	46° 16′ 30″	43° 55′ 20″	89° 11′ 50″	94.
	7	40.4	15.3	50.5	61.5	60° 49′ 10″	28° 15′ 10″	89° 4′ 20″	94.6
Second series..	14	43.9	28.8	46.75	55.75	34° 12′ 10″	55° 5′ 20″	89° 17′ 30″	94.6
	21	52.3	38.16	48.5	50 5	23° 50′ 30″	65° 30′	89° 20′ 30″	92.6
	17	53.5	33.5	50 5	55.5	37° 33′ 20″	51° 30′ 30″	89° 3′ 50″	93.27
	13	38.2	25.14	47.	54.5	34° 0′ 50″	55° 21′	89° 21′ 50″	96.16
	9	33.3	17.35	45.	57.	48° 39′ 25″	40° 38′ 15″	89° 17′ 40″	98.15
	28	60.2	40.2	47.25	50.	32° 23′ 10″	56° 35′ 10″	88° 58′ 20″	93.
Third series....	23	56.7	41.83	43.5	51.5	22° 8′	67° 12′	89° 20′	94.8
	15	49.	34.04	52	63.5	29° 7′	60° 16′	89° 23′	97.15
	12	46.4	29.81	50	68.5*	38° 58′ 45″	53° 25′ 25″	89° 24′ 10″	89.39*
	9	42.9	20.39	50	60.6	52° 39′ 50″	36° 26′ 40″	89° 5′ 30″	95.
	6	41.1	16.68	56	69.5	58° 41′	30° 29′	89° 10′	96.94
	3	39.6	7.9	64	79.	74° 46′ 10″	14° 26′ 25″	89° 12′ 35″	93.74
	0	41.8	.24	61.2	77.	88° 45′ 25″	0° 20′ 35″	89° 6′	27.76†
	6	41.9	16.32	50.25	61.33	59° 54′ 10″	29° 8′ 10″	89° 2′ 20″	94.8

* Primary volts probably read too high. † Estimated current in voltmeter.

NOTE.—The dynamometers were very insensitive for the currents used, it being considered desirable to avoid self-induction in them.

THE ELECTRO-DEPOSITION OF IRON.[1]

BY PROF. W. CHANDLER ROBERTS-AUSTIN, F. R. S.

THE great interest which would attend the investigation of the properties of pure iron has long been recognized, and although but few results have as yet been obtained, elaborate preparations for such an inquiry have from time to time been made. A committee appointed by the British Association described in 1869 a method which yielded iron of a high degree of purity, the work being entrusted to the late Prof. Matthiessen, who ignited pure ferrous sulphate mixed with sodium sulphate, reduced to oxide of iron, so obtained by pure hydrogen, and melted the spongy iron in a lime crucible before the oxy-hydrogen blow-pipe. The committee reported "that, with regard to the physical properties of pure iron, owing to the want of time, nothing has as yet been accurately determined." It appears, however, that many of the physical properties of the pure metal differ considerably from those of the commercial. The work appears to have been interrupted by Matthiessen's lamented death, which occurred in the following year. It may be that metallurgists have been satisfied that Bessemer metal is sufficiently pure to afford a basis for investigation without resorting to elaborate chemical methods of preparation, for but little has hitherto been done to prepare on a large scale a material in which the above-mentioned impurities are entirely absent. The

1. From the *Electrician* (London).

Digitized by Google

volume of the reports of the British Association, to which reference has just been made, also embodies a paper by M. H. Jacobi, of St. Petersburg, whose name is so well known in connection with electro-metallurgy. M. H. Jacobi and M. Eugène Klein took out a patent in this country in 1869 (No. 2,456), which was, however, allowed to lapse. Jacobi worked for some days in the mint laboratory, and communicated to me the details of the methods of manipulation, and in 1870, I visited St. Petersburg, and had the advantage of seeing the iron deposited on a large scale with a view to the preparation of plates to be used for printing the paper money of Russia.

The deposition of iron is attended with many difficulties, and in this country, so far as I know, iron has only been deposited electrolytically on a very small scale, and the metal deposited has been considered rather a metallurgical curiosity than as possessing any practical value. It may be well to describe briefly the method of procedure. "The bath used is a solution of ferrous sulphate and magnesium sulphate in equivalent proportions of specific gravity 1.155. The solution must be so far neutralized by the addition of magnesium carbonate that blue litmus paper barely shows any acid reaction. A wrought-iron anode of about the same size as the object which is to receive the deposit must be employed, and the best interval between the poles proved to be 4 c. m. The secret of success appears to be in the use of very feeble currents. Mr. W. H. Preece, F. R. S., electrician to the post-office, has kindly afforded me facilities for determining the strength of the currents employed, and it may be sufficient to state that the current best suited for the deposition of an iron medallion, the surface of which measured 560 sq. c. m., proved to have a strength of only 0.089 ampere, and such a current was yielded by two Smee's cells, each having a silver plate of 50 sq. c. m. area coupled up for intensity. The only objection to the process is the length of time required for its completion. It was not found possible to deposit such a medallion of sufficient thickness for use in the reducing machine in less than three weeks. The adherence of the deposited iron to the surface of the copper gives rise to considerable difficulty in detaching it, and in order to reduce this adherence it was found best to throw down on the copper model a thin film of nickel, and after exposing this for a short time to the air in order to slightly tarnish its surface to cover it with a second film of nickel, on which the iron was subsequently deposited. Even when this precaution was taken several moulds were spoilt by partial adherence of the iron and copper through the nickel. I am now conducting some experiments on the deposition of iron on copper moulds covered with a thin layer of silver iodide, that substance being well known as an excellent conductor." The metal has a high degree of purity. Mr. A. Dingham, a skilful analyst in my laboratory at the Royal School of Mines, finds that a specimen submitted to certain physical tests, to which reference will be made presently, contained only the slightest trace of magnesium and 0.005 per cent. of sulphur. Its density is 7.675, which becomes 7.811 when the metal is annealed. By annealing carefully measured strips of metal they were found to contract about one per cent. of their length. I found in 1869, that the metal as deposited occludes from 17 to 20 times its volume of hydrogen. Cailletet showed that iron deposited under certain conditions occludes 248 times its volume of hydrogen, the pressure of which gas renders the metal very hard, and augments considerably its coercive force when magnetized. Notwithstanding the purity of the metal its magnetic capacity does not appear to be high. Tested by the magnetic balance designed by Prof. Hughes, it would appear to possess less than two-thirds the magnetic capacity of a strip of Russian sheet of the same dimensions. The magnetic capacity of the strip of electro-iron rises considerably when the metal is annealed, which tends to show that the defective magnetic quality is due to the aggregation of the metal, and not to impurity, as well as to the partial expulsion of the occluded gas. With a view, however, to set this important question of magnetic influence at rest, I have deposited a carefully turned rod of copper, 1.01 foot in length, 0.511 inch in diameter, and of a maximum thickness of 0.035 inch. Dr. John Hopkinson having expressed a wish to conduct some experiments in this direction, the rod (now exhibited) will be placed in his hands.

From the point of view of its molecular structure the electro-deposited iron promises to afford interesting experimental results. Strips of the iron about 5.4 inches in length, 0.033 inch in thickness, and 0.75 inch in breadth, were tested for tensile strength. It was found that the deposited metal crushed in the jaws of the machine, and it was therefore necessary to anneal the ends of the test-piece before submitting it to stress. A piece of deposited iron so treated broke in the centre of the strip with a load of 2.7 tons per square inch. A similar strip annealed at the temperature of molten zinc (about 412° C.) was found to possess a tensile strength of 13½ tons per square inch, and another piece annealed at a temperature between the melting point of silver (940° C.) and that of the melting point of aluminium (about 300° C.) had a tenacity of 15½ tons per square inch, two separate experiments agreeing very closely. The elongation was in each case very small, and very delicate instruments would be required to determine its amount with accuracy. It will thus in future experiments be possible to examine by photographic methods, described by Mr. Sorby, the change in structure of a pure, brittle, and non-coherent metal to one having a considerable tenacity.

The use of electro-deposited iron for printing purposes has already been mentioned. One other application remains to be described.

Many years ago I suggested that electro-deposits of iron should be employed with a view to test the capabilities of a machine devised for reducing designs modeled in low relief, and the reproductions in metal and ivory were so faithful that the superiority of such iron deposits to the metal casts or copper electrotype ordinarily employed was at once demonstrated.

The preparation of the dies for the coins to be struck on the occasion of the jubilee of Her Majesty, the Queen, presented a favorable opportunity for the more extended application of similar deposits of iron. The designs modeled in plaster were reproduced in "intaglio" by the electrolytic deposition of copper, and on the copper moulds so prepared iron was deposited. The iron proved to be hard and of excellent quality, and up to the date of this paper obverse dies of all denominations of gold and silver coin, as well as the obverse of a medal, have been produced by a reducing machine from such deposits.

If they were to take a plate of copper and deposit on it a layer of iron, then glue to the back of the iron a piece of wood, and wrest the iron away from the copper, the iron did not separate cleanly, but the iron slipped off copper, just as it was asserted that a bank note could be split by glueing it between two surfaces of wood. What this meant he did not at present know, but it was a question that he was investigating. The paper was by no means in a state in which he could have wished to present it to the Institute; but he thought that the interest attached to the exhibition for the first time in London, of a medallion, and that medallion in iron, and a portrait of Her Majesty, was likely to be of far more interest to the members of the Institution than any remarks he could have to offer in the interval between now and the next meeting.

THE MEDICAL AND TESTING BATTERY OF DR. CHARLES PIPER.

A NEW battery with some interesting characteristics has recently been brought out by Dr. Chas. Piper, of Moline, Illinois, through the Electrical Supply Co. of Chicago.

Digitized by Google

The doctor in the course of his practice has recognized the want of portability in any ordinary battery, and this invention is intended to fill the void which has heretofore existed in batteries for medical and other uses, away from the office or laboratory. A battery which could be carried in the pocket in a dry condition, and in a condensed space, having about 30 volts E. M. F.; these were the requirements, and they seem to be fulfilled in Dr. Piper's battery.

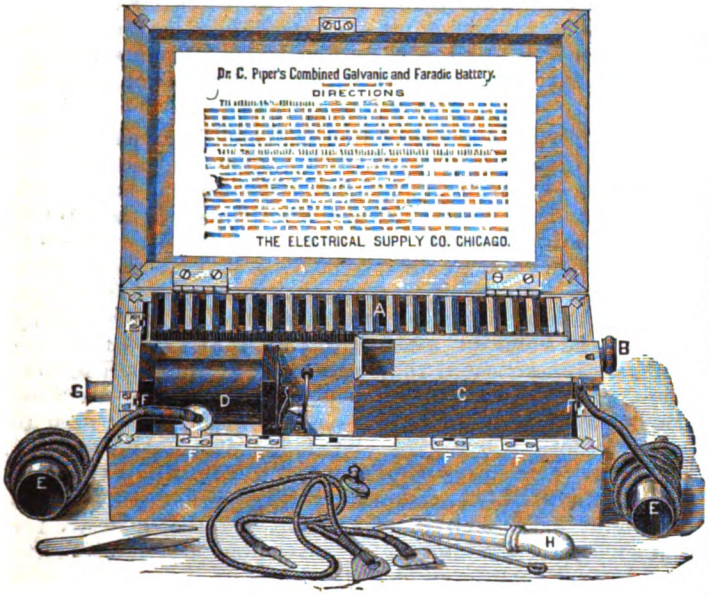

FIGURE 1.

Figure 1, is a representation of the open case, $5\frac{1}{2}$x9x$2\frac{1}{4}$ containing the battery and appliances for charging and using. Binding posts and wires are dispensed with, the flexible cords connecting the terminals taking the place of the latter. The cells are shown at A, and are so made up as shown in figure 2, as to leave a cavity between the two elements, carbon and zinc, for the solution; contact between the cells is made perfect by a screw B. The size of the cells is $1\frac{1}{4}$x$1\frac{1}{2}$x$\frac{3}{8}$ inches.

FIGURE 2.

In the box C, is found a quantity of paper slips, each covered with a crystallized salt of mercuric and potassic nitrate. One of these being placed in the cavity of each cell, water is then carefully dropped into the cell by means of the dropper H, great care being taken to keep the fluid from overflowing. D, is an induction coil, which is furnished with the usual sliding shield G, by which to regulate the strength of the inductive effect.

Through the use of a chemical for an electrolyte which is rich in nitric acid, there is no polarization, as the hydrogen liberated is at once oxydized by the oxygen of the electrolyte; and this, being uniformly spread on the strip insures uniform action in the cell.

Means are provided by which a limited number of cells may be used at one time, one or more.

The constancy of the Piper battery is best told by a test, in which a single cell was placed in circuit with a galvanometer coil measuring 800 ohms, the needle being deflected 75 degrees when first connected. After having remained so joined up for 24 hours, the needle had only fallen off one degree. The E. M. F. is 1.65 per cell, so that the combination shown, gives the operator an E. M. F. of over 30 ordinary gravity cells.

In addition to the medical form, Dr. Piper has constructed a still more compact case, 9x4x2 inches, for measuring and testing electrical instruments, wires, etc.

In both the forms the great advantage of portability is very marked, while its cleanliness and the readiness with which it can be handled, seem destined to make it a general favorite among electrical men as well as physicians. The medical battery weighs, complete, $3\frac{1}{2}$ pounds. The testing battery much less, but either is capable of transportation in a coat pocket.

NOTE ON THE ELECTRO-DEPOSITION OF ALLOYS, AND ON THE ELECTROMOTIVE FORCES OF METALS IN CYANIDE SOLUTIONS.[1]

BY SILVANUS P. THOMPSON, D.SC., B. A.

It is known that the electro-deposition of such alloys as brass, bronze, and german silver is not practicable from mixed solutions of the sulphates or chlorides of the constituent metals, but can be accomplished by using cyanide solutions or neutral solutions containing cyanide of potassium in excess, thereby apparently departing from the law of Berzelius, that out of a solution of mixed metals the least electro-positive metal is deposited first.

To ascertain the cause of these facts the author has investigated—

(*a*) The electromotive forces of a number of metals in aqueous solution of cyanide of potassium.

(*b*) The dependence of these electromotive forces, in particular those of copper and zinc, upon the degree of concentration of the solution.

(*c*) The variation of the electromotive forces of copper and zinc in a standard solution of cyanide of potassium at varying temperatures.

(*d*) The electromotive forces of zinc and copper in a "brassing" solution, consisting of the mixed cyanides of zinc and copper, having excess of cyanide of potassium present, and their variation at different temperatures.

It is found that the effect of higher concentration of the cyanide solutions is invariably to increase the electromotive force of copper more than it increases that of zinc.

In a cold dilute solution of cyanide of potassium the electromotive force of zinc against carbon is 1.158 volt, while that of copper against carbon is 0.948 volt, or zinc is 0.210 volt higher than copper. In a boiling saturated solution of cyanide of potassium, the electromotive force of zinc against carbon is 0.768 volt, and that of copper against carbon is 1.300 volt; or copper is 0.532 volt higher than zinc.

It is, therefore, possible to construct a voltaic battery containing one metal only, namely, copper, and one electrolyte only, namely, an aqueous solution of cyanide of potassium, kept hot at the anode and cold at the cathode of the cell.

In cyanide solutions, containing about the following number of grms. of cyanide to the litre, the following were the electromotive forces observed with a carbon cathode :—

Solution containing per litre.

99.4 grms.		191.4 grms.		1.18 grms.	
Metals at 18° C.					
Zinc.....	1.520	Copper.....	1.434	Zinc.....	1.13
Copper	1.425	Zinc	1.401	Brass.....	0.58
Brass.....	1.400	Brass.....	1.315	German silver ..	0.50
German silver ..	1.05	German silver ...	0.936	Lead.....	0.44
Gold.....	0.885	Gold.....	0.834	Copper.....	0.39
Silver.....	0.845	Silver.....	0.810	Silver.....	0.39
Lead.....	0.64	Lead.....	0.609	Gold.....	0.34
Iron..	0.47	Iron.....	0.181	Steel.....	0.30
Steel.....	0.44	Steel.....	0.161	Iron.....	0.30
Platinum..	0.27	Platinum ...	0.017	Platinum....	0.14
Carbon....	0	Carbon.....	0	Carbon.....	0

1. Paper read before the Royal Society, June 16, 1887.

Digitized by Google

Several of the metals exhibit maximum electromotive force at an intermediate concentration.

The following figures were obtained for zinc and copper in solutions of cyanide of varying strengths at 17° C.:—

Grms. per litre.	E.M.F. zinc.	E.M.F. copper.	Difference Z—C.
2.9	1.158	0.948	+0.210
5.9	1.167	0.967	+0.200
11.2	1.184	1.018	+0.166
23.8	1.221	1.058	+0.163
47.7	1.269	1.130	+0.139
95.5	1.303	1.220	+0.080
191.1	1.355	1.360	−0.005

In a mixed solution of cyanides of zinc and copper there is a neutral condition where the electromotive forces of zinc and copper are equal, and this neutral condition varies with the relative amounts of metal present, with the concentration of the solution, and with the temperature. The neutral temperature for a solution of given concentration is lowered by adding cyanide of potassium, and is raised by adding ammonia. The neutral point, however, is not well defined, the behavior of copper being very uncertain ; in general the electromotive force of clean copper in a cyanide solution rises, in some cases, as much as 0.06 volt, in a few seconds after immersion, but is rapidly though temporarily lowered on agitation.

Since the degree of concentration of the solution greatly affects the electromotive force of the metal, and since, in the act of deposition of a metal from its solution, the concentration of the liquid around the cathode is reduced, owing to slowness of diffusion, it follows that in electrodeposition the counter electromotive force at the cathode will vary with the rate at which metal is being deposited, and will, therefore, vary with the current density employed. And since, moreover, the variations in electromotive force due to differences of concentration are greater for copper than for zinc, it follows that in the deposition of brass from a mixed solution of cyanides of a medium concentration, in which zinc is slightly more electro-positive than copper, there will be a certain density of current with which the metals will be deposited in nearly equal quantities, while for weaker current densities the less electro-positive metal will be deposited in excess, and for stronger current densities the more electro-positive metal will be deposited in excess.

Hence, to variations in the concentration of the electrolyte near the cathodes are due the departures, observed with all currents except weak ones, from the law that out of a solution of mixed metals the least electro-positive is deposited first.

ABSTRACTS AND EXTRACTS.

PROFESSOR TYNDALL AND THE SCIENTIFIC MOVEMENT.

* * * * * * *

Others will rank beside or above Prof. Tyndall as investigators, but in the promotion of the great scientific movement of the last fifty years he has played a part second to none. The English people are a determined but somewhat slow-witted race, and it has been no easy task to convince them that a new era—that of science—was dawning. They have been content to pride themselves on industrial successes due for the most part to isolated efforts of genius, which was hampered by unnecessary difficulties, and which cannot be produced at will. They were long in seeing, they do not yet fully see, that our industrial position can only be maintained if armies of well-equipped followers are ready to seize the ground which the leaders win.

There is, however, a still harder lesson to learn. The industrial application of a scientific principle—vitally important to the well-being of the people as that application may be—requires nevertheless a lower form of intellectual energy than the discovery of the principle itself. The triumphs of applied science, of the physician, the engineer, the telegraphist, are readily "understanded of the people." The research laboratory, on the other hand, is open to few. The flash of genius which has wrung a fresh secret from Nature can only be fully appreciated by those who are intellectually competent to understand the difficulty and the success. And yet, if a widespread knowledge of science was to be, as it is, an essential condition of national well-being, it was absolutely necessary that the people should know something of, and be in some sort in sympathy with, the methods and conditions of scientific thought.

In supplying this need, Prof. Tyndall's greatest work has been done. Uniting scientific eminence of no ordinary kind with extraordinary gifts of exposition, he has, by his lectures and his books, brought the democracy into touch with scientific research. In dozens of lecture-rooms experiments devised by him are proving that a living science is a nobler instrument of education than a dead language. In hundreds of libraries his nervous English is convincing men of the value of a career like Faraday's, and teaching them to appreciate, if they cannot always in detail follow, the methods by which the victories of science are won. He has done perhaps more than any other living man to compel those who regard knowledge as valuable only in so far as it is immediately useful, to admit that the seed which is sown in the laboratory often produces the most abundant harvest in the workshop, and that a desire for knowledge is the mother of inventions which necessity could never have brought to the birth.

Such has been Prof. Tyndall's work ; and yet we venture to think that among those who met in Willis's Rooms a deeper feeling was aroused than admiration for an eminent worker and a useful career.

Many of the greatest masters both of the moral and intellectual life have sought the attainment of their highest ideals in a more or less complete withdrawal from society, and it may well be that some natures can best achieve in seclusion the concentration which a supreme effort demands.

But although the scientific movement of to-day may receive its highest inspirations from men who, like Darwin and Joule, have worked in self-imposed retirement, its distinguishing characteristic is that it is sweeping along with it all classes and all opinions. It is a new habit of thought in the light of which the foundations of our educational, industrial, and political systems are being reconsidered. It is a new and deliberate attempt to put into practice the belief that "the sovereignty of man lieth hid in knowledge, wherein many things are reserved which kings with their treasures cannot buy, nor with their force command ; their spials and intelligencers can give no news of them ; their seamen and discoverers cannot sail where they grow."

Thus it has come to pass that science has gathered round it a crowd of workers, engaged in very various tasks, but all of whom would be ready to admit that the cardinal principle of the movement in which they take part is the investigation of truth for truth's sake alone. They may be professors or manufacturers, soldiers or physicians. If only they are imbued with the desire to penetrate a little further into the mysteries which surround us, if only they are willing and able to add something to the sum of human knowledge, they are scientific men.

In part this army is organized. There is in England no Academy of Literature. The Academy of Arts, it is admitted, needs reform. The principal scientific societies, however, with the Royal Society at their head, perform the duties of an Academy of Science to the general satisfaction. No human institution is perfect, but it may be fairly said that they set in their Transactions a high

Digitized by Google

standard of scientific work, and that their judgment, whether of men or of investigations, is seldom challenged.

In spite of this advantage, neither the outside world nor scientific men themselves have as yet sufficiently realized that these societies constitute a great guild of that learning which is the most powerful and the most characteristic influence of our age.

On an occasion such as the Tyndall dinner this realization is quickened. The curious magnetic influence of numbers is felt. Minor differences disappear in the knowledge that all are workers in the same cause. Men become more vividly conscious that though students of Nature are excluded from the state recognition which is extended to the church, to medicine, and to the law, they too are members of a great profession. They realize that, though state rewards are given only to those who have applied their knowledge to some directly useful end, in a gathering of the profession of science the true leaders are those who have wrested the deepest secrets from Nature, careless whether they could be turned to gold or no.

A meeting held in great numbers and for a common purpose may have an influence which many an apparently more useful testimonial would lack. Prof. Tyndall has done service in the cause of science which merited the unique compliment he received. He would, we believe, be the first to rejoice if in the future the Tyndall dinner was remembered not only as a tribute to his own work, but as marking the beginning of a period in which the ranks of science were drawn closer together, and in which the further organization of the investigation of Nature claimed and received the attention which its importance demands.—*Nature.*

PROFESSOR TYNDALL.

EXTRACT FROM HIS ADDRESS AT THE BANQUET GIVEN HIM IN LONDON, JUNE 29.

"In 1850, during a flying visit from Germany to England, I stood for the first time in the bright presence of Faraday. In February, 1853, I gave my first Friday evening lecture in the Royal Institution; and three months afterwards, on the motion of Faraday, the old Chair of Natural Philosophy, which had been filled at the beginning of the century by Thomas Young, was restored, and to it I was elected. It causes me genuine pleasure to think that I shall be succeeded in that chair by so true and so eminent a man as Lord Rayleigh. It is not my intention to overburden you with egotism to-night; but, casting an earnest glance back upon the past, a few words seem due from me to the memory of one or two of the group of good men, no longer with us, with whom I was so intimately associated. Regarding Faraday, I will confine myself to stating that years have not altered my estimate of the beauty and the nobleness of his character. He was the prince of experimental philosophers; but he was more than this—in every fibre of his mind he was a gentleman. I might point to the industries which affiliate themselves with Faraday's discovery of benzol, and with his discovery of the laws of electrolysis. But I need not go further than the fact that in this our day a noble and powerful profession has been called into existence by his discovery of magneto-electricity. The electric lamps which mildly illuminate our rooms, the foci which flood with light of solar brilliancy our railway stations and public halls, can all be traced back to an ancestral spark so small as to be barely visible. With impatient ardor Faraday refused to pause in his quest of principles to intensify his spark. That work he deliberately left to others, confidently predicting that it would be accomplished. And prompted by motives both natural and laudable, but which had never the slightest influence on Faraday, others have developed his spark into the splendors which now shine in our midst. It would be a handsome Jubilee present, if it were a possible one, to roll up the career of Faraday into portable form, and to offer it to the Queen as the achievement of one of Her Majesty's most devoted subjects during her own reign. Faraday's series of great discoveries, however, began in 1831, which throws his work five or six years too far back. During the rest of his fruitful life he was a loyal son of the Victorian epoch. But, passing beyond the limitations of the individual, what is science as a whole able to offer on the golden wedding of the Queen with her people? A present of the principle of gravitation—a handing over to her Majesty of the bit and bridle whereby the compelling intellect of Newton brought the solar system under the yoke of physical laws—would surely be a handsome offering. I mention this case of known and conspicuous grandeur in order to fix the value of another generalization which the science of her reign can proudly offer to the Queen. Quite fit to take rank with the principle of gravitation—more momentous if that be possible—is that law of conservation which combines the energies of the material universe into an organic whole, that law which enables the eye of science to follow the flying shuttles of the universal power, as it weaves what the Earth Spirit in 'Faust' calls 'the living garment of God.' This, then, is the largest flower of the garland which the science of the last fifty years is able to offer to the Queen. The second generalization is like unto the first in point of importance, though very unlike as regards its reception by the world. For, whereas the principle of conservation with all its far-reaching and, from some points of view, tremendous implications, slid quietly into acceptance, its successor evoked the thunder peals which it is said always accompany the marriage of thought and fact. For a long time the scent of danger was in the air. But the evil odor has passed away; the air is fresher than before; it fills our lungs and purifies our blood; and science in its Jubilee offering to the Queen is able to add to the law of conservation the principle of evolution."

A PRACTICAL TEST OF STORAGE BATTERIES FOR TRAMWAYS.

In a paper read before the Electrotechnischer Verein, at Berlin, Herr J. L. Huber, the engineer of the Hamburg street railway, gives some very interesting details regarding the cost and operation of storage batteries on street railway lines. The system employed by Herr Huber is the Julien, in which the storage batteries are carried by the car.

In order to obtain reliable results, experiments were undertaken on a specially difficult line, both as regards curves and grades, and which, in addition, crossed much frequented streets, so that all the difficulties met with in railroad traffic in populous cities were encountered. The road extends from the Rathhausmarkt, in Hamburg, to the Berthastrasse, Barmbeck, over the Mühlendamm, on which line grades of 30 per cent. are encountered.

Herr Huber states, regarding the durability of the E. P. S. storage battery employed, that deterioration takes place only in the positive plates; and this is the more pronounced the greater and more frequent the normal strength of current for which the plates are designed is exceeded. With a well-regulated management—that is, by an arrangement of storage batteries and car, such that with the heaviest grades and loads no abnormal current is drawn from the battery—the wearing out of the positive plates amounts to from 2 to 3 per cent., or, in round numbers, 2½ per cent. for 1,000 kilometers traveled. If, in addition, the traffic be so arranged that with every charge of the accumulators only 50 per cent. of the distance is traveled which could be traveled with new plates, then a wearing out of the plates amounting to 50 per cent. is permissible—that is to say, that over 20,000 kilometers (12,500 miles) can be run before renewal becomes necessary. A car which, including passenger and storage batteries, weighs 7,000 kilogrammes (about 7 tons), and which is to ascend grades of 30 per cent., such as occur on the Hamburg

Digitized by Google

line, requires 800 kilogrammes of active material in the positive plates, and its renewal, including the cleaning of the grids, which can be used over again, as they are not oxidizable, costs 1s. per kilogramme (2.2lb.)—that is 4 pfennigs (½d.) per kilometer run. That would be 0.8d. per car mile for renewal of plates.

Under the same conditions the motive power required is ¾ horse-power hour per kilometre (⅝ mile) run. The cost for attendance, oil, maintenance, &c., for one horse-power hour is 1d.; consequently this cost per car kilometer is ¾d. To the above items must be added the maintenance, oil, &c., for the motor on the cars, which amounts to ¼d., and contingencies run up to an additional ¼d. The total cost, therefore, with the conditions given amounts to 1¾d. per car kilometer (2.8d. per car mile).

Comparing the cost of electrical traffic with that of horses, Herr Huber states that to operate the usual one-horse car, which, including driver and conductor, carries 26 persons, 7 horses are required on the same line for one day of 100 kilometers run. So that, as the electric car carries 31 persons, $8\frac{85}{100}$ horses would be necessary. The cost of maintenance for one horse during the last year, according to the *Jahresbericht der Strassen-Eisenbahn-Gesellschaft*, Hamburg, amounted to 1.96s. per day per horse; so that the cost per car kilometer amounts to 2d. (3.2d. per car mile). It follows, therefore, that even to-day electricity is more economical than horseflesh, and the cost of the former can be considerably reduced by improvements.

The results of experiments show that 88 per cent. of the energy stored in the accumulators can be drawn out, and Herr Huber only counts upon 80 per cent. for safety; that is to say, that of the electrical energy delivered by the dynamos 20 per cent. is lost by the use of accumulators, and this is independent of the length of the line and the power required upon the same, such as the overcoming of grades, &c. It is to be remarked, also, that for the electric traffic such as exists in Hamburg, any car driver can be employed and no trained men are necessary, as is the case with locomotives, so that the expense of trained hands is avoided.

The above are the results of experiments which were carried out from the end of May to the end of December of last year, with a public passenger car, and the distance traveled amounted to 12,000 kilometers (about 7,500 miles). As these experiments were undertaken in public traffic on an ordinary horse road made specially difficult by its grades, and not upon a road specially constructed for the purpose, Herr Huber is of opinion that the life and power of competition with other systems of the storage battery is definitely assured.—*Electrician* (London).

UNDERGROUND WIRES FOR FAST-SPEED TELEGRAPHY.

On the 11th of February, 1887, a note was published in the *Electrical Review* in regard to some experiments then being carried out at Callender's Cable Works, Erith, with the view of constructing an underground telegraph line, capable of being used over long distances, with high-speed instruments.

These experiments have now been completed, and a report of the results obtained may be of interest, especially in view of recent discussions on underground wires. They were carried out at the suggestion of Mr. W. H. Preece, in conjunction with the Postal Telegraph authorities; the tests were verified by Mr. H. R. Kempe, of the engineering department, G. P. O., and comparisons were made with lengths of gutta-percha covered wires in iron pipes, kindly placed for this purpose at the disposal of the Callender Cable Co. by the post office.

The plan adopted was based on recent researches, the results of which were contained in the paper (reproduced in our columns) presented to the Royal Society on February 17th, by Mr. Preece, "On the Limiting Distance of Speech by Telephone."

It was shown in this paper that the speed of the current varies inversely with the product of the total resistance and the total capacity of the circuit. From this fact all the experiments made in connection with the projected line take their start.

The intention throughout has been to combat the difficulties of obtaining a high current speed in both the above directions, viz., by increasing the section of copper in the conductor, and *per contra*, decreasing its resistance to the greatest degree consistent with the possible practical expenditure on an underground line, and also by reducing the static capacity of the completed line to a point much lower than obtained hitherto.

In the first case, that of reducing the copper resistance, two sizes of wire were tried, viz., .097 inch, as used on the Nevin line, having six ohms resistance per mile, and .128 inch (No. 10 legal standard gauge), having 3½ ohms resistance per mile. to compare with No. 18 gauge wire, with 23 ohms per mile, or 16 gauge wire with 13 ohms per mile; the former being the wire in almost universal use for underground work, and the latter being occasionally employed for important circuits.

These larger sized conductors were insulated so that the static capacity remained nearly constant for each wire, the wall of dielectric being increased *pro tanto* with the enlarged diameter of the conductor. Such a method of manufacture is not practicable except with a dielectric of relatively low initial cost, and for the purpose in question the material used, Callender's bitite, was specially suitable, as a heavy sheathing could be put on the wire at a very small increased expenditure.

The increased value in working speed obtained from the diminished resistance was represented by

697 in the No. 10 L. S. G. wire,
386 " Nevin size "

100 representing the ordinary No. 18 L. S. G.; whilst the cost of finished insulated wires was approximately in the ratio of

265 for No. 10 gauge,
175 " Nevin wire,
100 " No. 18 gauge.

In the second direction, that of reducing the inductive capacity of the finished circuit, a new method of laying was adopted, differing totally from the plan generally used of drawing wires into iron pipes.

An open case or trough, rectangular in form, was made of bitumen concrete. The pieces composing this were six feet in length, and all jointed together, *in situ*, into one continuous case, In this "spacing bridges" were placed at every two feet, for the purpose of carrying a tier of insulated wires and maintaining them parallel to each other. These bridges were fixed by molten bitumen being run in round them, and after the insulated wires were in position resting in the hollow arches of these bridges, more molten bitumen was poured in, completely embedding the insulated wires, and surrounding them on all sides. Second, third, and fourth tiers were laid in a similar manner, the whole available space within the case being thus utilized.

Various modifications were made in the positions and treatment of the insulated wires.

In one case, a solid block of 12 was laid in three tiers, the insulated wires touching each other, but the block being surrounded by a clear half-inch of solid bitumen on all sides. These were of No. 10 gauge, and on being tested in an iron pipe, they showed a capacity of .300 microfarad per mile. When laid complete, as described, their static capacity was reduced to .195 to .210 microfarad per mile.

In another case, 16 similar wires were laid, but in addition to having a half-inch of bitumen between the wires and the case, they had half an inch of similar material

Digitized by Google

between each insulated wire and its neighbor. The static capacity was reduced to .131 to .135 microfarad per mile, as against .300 microfarad in iron pipes, and about .200 microfarad when laid as described previously in block.

During the progress of the work, some tests were obtained showing the prejudicial effects of damp on underground work in respect specially to static capacity. Insulated wires laid in a precisely similar manner to the last series, but in wet fog and heavy rain, tested .170 to .180 microfarad per mile, and in damp weather, without rain, from .140 to 145 microfarad in place of the .131 to .135 obtained in dry weather. It was thought that any moisture adhering to the tape with which all the wires were served over the dielectric, would be expelled by the heat of the molten bitumen, but this is shown not to be the case, and the opinion already held by many is confirmed that tape, no matter how carefully prepared or dressed, must always act to a certain extent in increasing the static capacity. Various materials were tried as a serving, and a reduced inductive capacity was shown as a less absorbent material was used, the best results being obtained with core, simply insulated, and unprotected by any tape or serving. It was found that wires so insulated alone and laid in a block with half an inch of solid bitumen on all sides of the block, tested .145 microfarad per mile, as against .210 when laid in similar conditions but served with tape.

Laying in blocks has several advantages over the more elaborate method of placing each wire with its own sheathing of half an inch of bitumen between the outside of each dielectric, the most important being the saving effected in space and in cost. It will probably be found the best plan suitable for use, and the size of conductor which will doubtless be most suitable and economical will be the .097 inch wire.

The working speed of such a line will compare with the 18 copper covered with gutta-percha to 7½ taped and drawn into iron pipes, thus:—18 to 7½ C. R. × I. C. = 23 × .250 = 5.750; .097 C. R. × I. C. = 6 × .150 = .900 or about 6½ times as effective, whilst it is understood that the cost of laying such a line complete would be little in excess of an ordinary 18 gauge trunk line in iron pipes.

A number of experiments were made with the view of dispensing with insulation on the wire, but in every case it was shown that the conductor must first be insulated thoroughly, and that on this completed core the second process of reduction of static capacity must be made.

Bare copper wires were laid in ordinary refined bitumen and bitumen concrete, but the specific insulation was never high enough to obtain reliable tests, and no reading anyway approaching even .500 microfared could be obtained.

Wires served with cotton and tape and compounded were also tried with results but little better than in bare copper, thus showing that to obtain the low readings necessary for any improvement in working capacity a conductor will have to be well insulated.

The bitite insulation used in this case is said to be a vulcanized material whose base is pure bitumen, absolutely refined to purity, and not the ordinary refined bitumen of commerce. It is made to stand a high temperature and is not in any way injured by the molten bitumen run in around it. The total destruction of gutta-percha when subjected to the same treatment rendered it impossible to carry out a series of tests as to the comparative value of this material when so laid.

It appears from the foregoing that considerable progress has been made towards the production of an underground line such as will be suitable for the heavy work of the present day. It is not pretended by the Callender company that this system is applicable for town work, or for a network of short service wires such as exists in London and other cities, but it is claimed that it is suitable in all respects for main trunk lines to connect large towns, and that by its use means of rapid telegraphy are provided such as can be given by no other system at anything like the same cost.—*Electrical Review* (London).

POWER REQUIRED FOR ELECTRIC LIGHTING.

In the production of electric lights, the principal factor for commercial consideration is the power required as compared with the number of lights produced of stated candle-power. Contracts for electric lighting apparatus should, therefore, distinctly state all conditions which affect the cost and amount of power to be required in order that fulfillment of guarantees or the contrary may be demonstrated and settled without equivocation. Guarantees of horse-power economy are, therefore, to be made upon the coal required for producing the necessary steam power, or the number of actual or indicated horse-powers required for producing a given result in light, *i. e.*, number of lights of stated candle-powers. Where a whole plant is erected the best safeguard for the purchaser is a guarantee based upon coal consumption.

Guarantees of indicated power are the least satisfactory unless it has been distinctly agreed that the indicated power shall be taken by laying the dynamos on some particular engine, when that engine is already carrying a stated indicated load. The reason for this is, that all engines—in fact the same engine at different times—vary in actual power compared with the indicated for different loads.

Where the steam-power plant is not part of the plant furnished, then the best basis for guarantee of power is the number of actual horse-powers of 33,000 foot pounds to be delivered to the dynamos or machinery furnished by the electrician.

Power required should be agreed upon for not simply the whole number of lights taken at one time, but as well for fractional parts, as three-fourths, one-half, one-fourth, the whole number; for the commercial efficiency of dynamos decreases with fewer lights.

Should it come to a test, the constructor of the plant should pronounce conditions satisfactory. Unless conditions and results are carefully noted, no test of power should be regarded as of any value. As to conditions and results for purposes of test of commercial efficiency of an electric lighting plant, it is the duty of a person who measures the power to know simply how many lights he has in circuit and what "pressure" he has in the circuit as shown by the voltameter. Any of the lamps may then be selected and their candle-power tested when the identical voltameter used at the power test is employed and attains the same reading. These precautions as to results are especially applicable in case of incandescent lights.

In order to avoid any errors arising from difference of conditions of subsequent candle-power test, it is advisable that the horse-power expended should be measured simultaneously with test of lamps.

The following is a tabulated result of simultaneous tests of horse-powers and of lights. They are interesting in comparison, because they show improvements made in the past few years, and also how the commercial efficiency of electric lighting apparatus decreases with fewer lights. The first was made by us recently upon a 200-light machine, made by a prominent company four years ago, using the most improved lamps now made by that company. In both tests, lights were held to 16 standard candle-powers.

178	lights	required	24.4	h. p.,	equals	7.3	lights	per h. p.
91	"	"	14.36	"	"	6.34	"	"
45	"	"	9.08	"	"	4.96	"	"
5	"	"	4.79	"	"	1.04	"	"

Dynamos only, no lights, 3.07 h. p.

The following is the partial result of a similar test recently made by us of actual horse-powers required by the apparatus of a younger company:

Digitized by Google

400 lights	required	40.89	h. p.,	equals	9.98	lights	per	h. p.
300 "	"	30.82	"	"	9.70	"		"
200 "	"	20.91	"	"	9.5	"		"
100 "	"	12.28	"	"	8.1	"		"
50 "	"	7.75	"	"	6.4	"		"

Dynamo only, no lights, 3.78 h. p.

FRANKLIN VAN WINKLE, in *Light, Heat and Power.*

A POWERFUL GALVANIC BATTERY.

AMONGST the many claimants for improvements in galvanic batteries we note that Mr. Alfred Dun and Herr F. Hasslacher, of Frankfort-on-the-Main, have patented a combination for which they claim the high E.M.F. of 2.5 volts per cell, while in consequence of the small resistance of the exciting and depolarizing liquids employed, the strength of current is very considerable. Moreover, notwithstanding its considerable power, the element is so constant in its action that it may be used with great advantage for electric lighting, or for driving motors. The new element consists of a carbon negative electrode having as depolarizing liquid nitro hydrochloric acid (aqua-regia) either alone or mixed with ferric chloride. As positive electrode in the other cell zinc is employed, or any other metal soluble in soda lye, or, at any rate, on closing the circuit, and as exciting liquid soda lye of greater or less concentration is used. The chemical action of the element is as follows: The zinc is oxidized by the oxygen evolved, and the oxide formed is dissolved by the soda lye, while the hydrogen is at once taken up by the aqua-regia, forming hydrochloric acid with its chlorine. In the gradual decomposition of the aqua-regia there is produced chlorine together with chloro-sub-nitrous acid and chloro-nitrous acid, which can also give up their chlorine. When the aqua-regia is saturated with chlorine its decomposition ceases, and only begins again with a fresh production of chlorine, or of the two above-named compounds, when the free chlorine first evolved is taken up by hydrogen or any other body that absorbs chlorine, such as ferrous chloride. According to the quantity of hydrogen evolved by the action of the element, the development of chlorine is proportional to the absorption of the existing free chlorine, and this lasts as long as any aqua-regia exists. With the presence of ferric chloride the depolarizing process may be considered as consisting in the reduction of ferric chloride to ferrous chloride by the hydrogen, with formation of hydrochloric acid, the ferrous chloride being, however, at once reconverted into ferric chloride by the chlorine of the aqua-regia. This takes place as long as there is any trace of the aqua-regia present. Only after this has disappeared does a permanent formation of ferrous chloride begin, combined with an increase of resistance in the element. But this does not occur as long as all the iron is present in the form of ferric chloride. It is, therefore, advantageous always to have an excess of aqua-regia present. The addition of ferric chloride has, therefore, the important object of enabling the element to be utilized to the fullest possible extent without increasing the resistance, which explains the reason why a mixture of aqua-regia and ferric chloride renders the element more constant than when aqua-regia alone is used. The addition of the ferric chloride has, however, also the important advantage, that by means thereof a too rapid mingling of the inner and outer liquids is prevented. This is particularly important when a carbon cell is used in place of an earthenware cell, in consequence of the greater porosity of the former. On the ferric chloride mixing with the soda lye in the walls of the porous cell, oxide of iron is formed which fills up the larger pores without materially interfering with the necessary contact, and without increasing the resistance, which is rendered very small by the good conduction of the carbon cell. In addition, the oxide of iron assists the depolarization, and, therefore, also acts beneficially in this respect. As the hydrochloric acid is always formed afresh, it is advantageous to use aqua-regia containing much nitric acid, or, in replenishing only to supplement the nitric acid consumed. The very high electromotive force of the element is caused by the fact that to the electric tension between metal and carbon there is also added that existing between the aqua-regia with ferric chloride and the soda lye. If it is desired to avoid all smell during working the hydrochloric acid of the aqua-regia may be replaced by chromic acid or a chromate. In this case no production of free chlorine ensues, and any nitrous acid fumes are at once absorbed by the chromic acid. The depolarizing action of the nitric acid will then be assisted by that of the chromic acid. In this case platinum or aluminium may be used in place of carbon.—*English Mechanic.*

THE EQUIVALENT OF ZINC.

AT a recent meeting of the Chemical Society, a note was read by Lieut.-Colonel Reynolds, late R. E., and Prof. W. Ramsey, on the equivalent of zinc. The determination has been made by measuring the hydrogen evolved on dissolving zinc in acid, every precaution being taken to ensure accuracy; the weight of the hydrogen obtained was deduced from Regnault's determination of the density of hydrogen. The zinc used was separated by electrolysis from zinc sulphate purified to the utmost possible extent. The last sample prepared was so nearly pure that dilute acid would scarcely act on it. In all 29 experiments were made. Four experiments had to be rejected; nine were not fully corrected, and therefore were also rejected; the next 11 were considered preliminary, the mean atomic weight deduced from them being 65.2430; finally, five experiments were completed, and the results—free from all known sources of error—obtained as the mean yielded the figure 65.4787 + 0.016135.

A NEW MICROPHONE.

HERR HEMPEL, of Leipzig, has succeeded in making improvements in the Gower microphone, by which the clearness of speech and strength of tone is materially increased. In external appearance, this new microphone is similar to that of Ader, and in common with it the carbon contacts are not liable to get out of adjustment, the arrangement being such as to make them pratically self-adjusting under almost all circumstances. The carbon pencils are arranged star fashion under a wooden diaphragm of about six inches diameter. The instrument is capable of transmitting the faintest whisper equally as well as a vigorous shout, and there is hardly any change in the color of the tone; nor are there any extraneous noises produced, as is sometimes the case in other microphones. The instrument has been found specially suitable for the transmission of music, a successful trial having been made at the last technical exhibition at Görlitz, where music was transmitted over a distance of one mile. The efficiency of this transmitter is, however, largely dependent upon perfect workmanship, and this makes it rather too expensive for general adoption. —*Industries.*

TRAIN TELEGRAPHY.

TELEGRAPHING to and from a moving train, for which the above seems to be the best short title, is getting to be an old story on the Lehigh Valley road, the operators of the Consolidated Railway Telegraph Company having traveled on three trains each way daily between Perth Junction and Easton now for some months. Several modifications and improvements have been made in the apparatus and plant (if a thing of which there is so little may be dignified by the word "plant") and the facility with which the work is now carried on is such as to give added promise of the useful career in store for this invention.

It will be remembered that it was very soon discovered when the original apparatus (described in the *Railroad Gazette*, Feb. 20, 1885) was tried that the distance at which a current could be induced was not by any means so limited as had been anticipated, and that ordinary line wires could be successfully used. In

Digitized by Google

practice it is found, however, that a separate line is more satisfactory, for the reason that most of the ordinary lines of poles make occasional detours into swamps, over mountains, etc., and thus interrupt the operators, though the trouble from undesired currents from other wires on the same poles is found to be hardly worth noticing, "quantity" currents having little or no effect upon the "intensity" currents used in the train system. A pole line is preferable to a wire laid along the rails, for the reason that it makes so much less work for the line inspector. A well-built pole line on short poles (about as high as a car roof) is cheap and durable, and requires comparatively little attention from an inspector, while tracks must of necessity be constantly tampered with by repairers, and thus keep the wire inspector always on the go. A pole line is especially desirable on a new road, for it can be duplexed and used for ordinary business from office to office, thus in most cases providing for the whole business of the company and the towns on its line by a single wire; and an aerial line, as is well known, has great advantages over one on or under the ground in its freedom from retardation by the earth.

The metallic roof of a car and the truss rods on the under side thereof have been connected with each other and successfully used as the induction coil, so that it seems quite likely that the convolutions of wire can be dispensed with. All unsightly incumbrances in the car being thus unnecessary, the apparatus can be placed in a drawing room car or coach as well as in a baggage car or elsewhere. The operators on the Lehigh Valley now ride in the drawing room cars, the instruments being connected by a flexible cord with the baggage car. From the experience on the Lehigh Valley it is apparent that an important mission of this device, perhaps the most important, is the serving of the passengers on the train, and it is clear that the more convenient it is for the people to patronize the line the more popular it will be. A neat office (which, however, consists of nothing more than a board about 13 in. by 15 in. in the operator's lap) in the corner of a parlor car, therefore, is likely to be much more successful than one among the oyster-tubs and coat-tearing trunks of the baggage car. The company now use a telephone receiver at both ends, the vibrator of the sending instrument sending the currents so that the buzzing, which sounds like that of a very shrill bee, is exactly reproduced in dots and dashes in the telephone. To read these dots and dashes is like reading Morse characters made by a steam whistle, which to most operators is not so pleasant as the familiar sounder; but the train operators find no difficulty in it, nor are they disturbed by the noise of the train, even with the windows open.

Railroad superintendents, like everybody else, are making constantly increasing use of the telegraph, and the more they use it, the more efficient they want it to be; as trains multiply and cares increase, they come to want instantaneous communication with every one, conductors among the rest, so that what was at first mentioned as one of the chief uses of the system, that of sending despatcher's orders and facilitating train movement on single track, may become, so far as volume of business is concerned, secondary to its service in miscellaneous railroad business, such as is done by double track roads, which do little despatching. Already the Lehigh Valley has experienced the value of the service in some typical cases, one of which was that of a breakage in the engine, which delayed a train some five miles from a telegraph office and which under ordinary circumstances would have necessitated a wagon or foot trip that distance, but which by the aid of the apparatus on the train was settled at once, a relief engine being sent for and brought to the aid of the train in about ten minutes.

The system is not being tried on the road by mere sufferance; the railroad company not only affords ample facilities, but actively aids in perfecting the details, General Superintendent Goodwin, well known for his enterprise in other directions, taking, we understand, a lively interest in the success of the project, as does also Telegraph Superintendent Lattig.

The question of economy which is all important here as in everything else where a balance sheet periodically intrudes itself, would seem in a fair way to be satisfactorily settled. The company now charges ten cents above Western Union rates for an ordinary message; at this rate it seems quite likely that the principal trains on roads of the size of the Lehigh Valley or larger might furnish a remunerative amount of business. The company has not as yet "pushed" its business, but receives unsolicited patronage from passengers, who generally, of course, have not heard of the system before they enter the train.—*The Railroad Gazette.*

CORRESPONDENCE.

NEW YORK AND VICINITY.

Electrical Service During the Heated Term.—The Mutual District Messenger in Europe.—Electric Trucks for Hauling Freight.—The New Weston Factory in Newark.—A Pony Delivery Service. An Electric Yacht.—The Board of Electrical Control.—The Electrical Exhibition.

A HEATED term in New York city brings into prominence the various electrical and mechanical devices which have been brought into use for facilitating local intercommunication. In these days the public patronizes both the telephone and district messenger service freely wherever physical exertion may be lessened by their use. The street railways are crowded beyond comfort, while the telegraph receives its quota of summer business from the vast throngs who have left their homes and business to seek recreation and rest.

Novel uses for messenger boys have always been a favorite theme of the newspaper reporter, and the latest instance is that of despatching No. 1,222 of the Mutual District company to London and return, as a bearer of souvenirs and congratulatory letters to the surviving writers of "The Highest Bidder," and other persons in that city. He sailed by the *Germanic*, on July 27th, with his blue coat buttoned up to his chin, his shoes polished to the highest possible degree, and after delivering his various packages to Edmund Yates, Henry Irving, and others, but more especially to Nate Salsbury and Buffalo Bill, he will return to this city, and return his tickets duly signed with copious reasons for delay written on their backs. While it may be a popular belief that messengers are frequently absent long enough to complete a trip to Europe, this will probably be the first actual attempt in that line, and the manager of the office will not worry himself over the connundrum "Where is my darling boy to-night?"

Among the various uses proposed for electric power, a dry goods merchant has suggested the construction of an electric dray, which he thinks might be made so much more serviceable than the horse truck now so generally used, as to relieve our streets of those vexatious blockades which are continually occurring. A proper preliminary step might be the improvement of the pavements, or the establishment of a system of trucking by a monopoly of proper dimensions, which would replace the present "every man for himself" method which now prevails. There is a chance for considerable of a reformation before a successful electric truck is devised, but the problem has been gravely referred to Mr. Edison as worthy of his attention through the columns of the *Sun*.

Manager Feary, of Newark, is ever on the lookout for some improvement in the delivery of messages. He used the telephone to a considerable extent for this purpose, but having disposed of his interest in the telephone company he has since substituted for it the gay and festive mustang pony. It is difficult to decide whether the pony or the bicycle would prove most desirable to the average messenger, but either will tend to make the service attractive, even should it not facilitate the delivery of telegrams.

Since the burning of the lamp department of the Weston factory, at Newark, the United States Electric Lighting Co. has decided to buy the property at 111 and 113 Orange street, and rebuild on the ground where the fire occurred. The price paid is understood to be $75,500, and upon the clearing away of the ruins, which is now in progress, one of the finest factories in Newark, will be erected as soon as possible.

A novelty in aquatic circles will soon appear in the shape of a yacht which is now building at Newburg. She will be 37 feet in length, and be driven by the current from a storage battery. This is the first vessel of the kind which has been built in this country, and her appearance in the harbor will excite great interest among professional and amateur seamen as well as electricians.

Renewed activity in subway circles has followed the reorganization of the commission under the title of the "Board of Electrical Control." Although its powers have not yet been exercised in the direct reform of abuses in electrical construction it may be readily seen that there is an opportunity for it to undertake other work which is perhaps fully as important as putting the wires underground. The rules and regulations as published by it, look to the consolidation of different routes of electric lines devoted to kindred branches of the business. Whether opposing interests are to be sufficiently harmonized to effect such a result appears somewhat doubtful. Had something of the kind been done years ago, probably the various underground bills would never have been heard of.

The electrical exhibition in connection with the American Institute fair promises to be a leading event of the coming season. The most serious question as to its organization, is perhaps the limited amount of space which is to be devoted to it, when the magnitude of the present electrical interests is considered. As it is not to be competitive, the usual annoying controversies as to the respective merits of the exhibits will be avoided. The various committees appointed have been selected with care, and the experience of the managers of the American Institute in combination with the energy and zeal of President Pendleton and Secretary Wetzler of the electrical section, will certainly lead to the best attainable results. The appropriation of $2,000 for the preliminary expenses enables these gentlemen to work with confidence that their plans will be carefully executed, as they are not compelled to depend entirely upon voluntary assistance.

NEW YORK, July 28th, 1887.

Digitized by Google

PHILADELPHIA.

The Baldwin Locomotive Works to put in a Westinghouse Electric Light Plant.—A Large Dry Goods House will put in a 1,300 Light Plant.—Electric Railway Experiments.—Incandescent Gas Lights to Compete with Electricity.—Mr. Edison Visits Philadelphia.—The Philadelphia Lighting Co.

THE Baldwin Locomotive Works have made a contract with the Westinghouse Electric Co. for the placing of an electric plant in their establishment, with a capacity of 2,700 16-c. p. lamps, distributed through the offices and machine shops, and 200 150 c. p. lamps for the finishing shops, the boiler shops and the yard. This will require the use of four dynamos, arranged to be operated independently or together. This will be the largest isolated incandescent plant in the United States.

A Westinghouse plant with a capacity of 1,300 lights is now being erected by the Keystone company for Strawbridge & Clothier, one of the largest dry goods and notion houses in the city.

A practical test of an ordinary street car propelled by stored electrical energy, given a few days ago by William Wharton, Jr. & Co. on their premises at 23d street and Washington avenue, was witnessed by a large party of gentlemen. The experiment was demonstrated on a circular track of 1,050 feet, the car at times containing as many as 35 passengers. The motive power consists of an electric motor which is suspended upon one of the axles underneath the car, and 80 small cells representing the storage battery, concealed beneath the seats. The track contains several sharp curves and a grade with a rise of five per cent. The car starts and stops with perfect ease upon any of the curves or upon a grade with 50 passengers on board. The operator has perfect control over the mechanism of the car, can stop and reverse instantly or regulate the speed from one to 20 miles per hour. The whole propelling apparatus is entirely out of sight and out of reach, thus avoiding all danger. The car is lighted by electricity, which also operates the signal bells. Mr. Wharton is desirous of introducing this electric motor car in the park. The commissioners, it is said, are pleased with its operation.

The various electric light companies will have to look to their laurels, and beware of the encroachments of the "Limited Gas Improvement Co.," whose friends claim that the company are preparing to meet the electric light with an incandescent gas lamp which will do much better than the most perfect electric lamp. (They don't seem to have any doubt about this in their minds.) It is said the company has purchased from Prof. Auer, of Vienna, the right for the United States of the Wellsbach incandescent gas light, which has created such a sensation in Europe. Extensive works will be erected in New Jersey at once for the manufacture of this new lamp, and four companies have been organized already, each with a capital of $4,500,000, and each with a separate territory. The company that is about to erect factories in New Jersey will control the manufacture and sale of the new lamp in Pennsylvania, New Jersey, Delaware, Maryland and the District of Columbia. None of the new lamps have been made in this country as yet, and there are but a few of them here. The gas people seem to have unlimited faith in this new venture, which is clearly indicated in the fact that they are contemplating the investment of $18,000,000 in introducing and manufacturing the lamps. Each of the lesser companies will be controlled, probably, by a syndicate, and the proposed capital will be furnished from this city. This appears (on paper) to be a beautiful scheme, and no doubt those who are in on the ground floor will be rolling in wealth as soon as the electric light companies are extinguished.

Thomas A. Edison was in the city recently, purchasing electrical apparatus for his new laboratory at Llwellyn Park, N. J., which is to be devoted entirely to experimenting. At present he is engaged on experiments in submarine signaling, the underlying principle of which is the remarkable facility afforded by water for transmitting sound. With an outfit of steam whistles and transmitters he hopes to make it possible for ocean steamships to transmit messages a distance of at least seven miles.

The county clerk of Camden has authorized the Philadelphia Lighting Co. to begin business, with a capital of $3,000,000. The new company proposes to furnish electricity for heating and lighting purposes. The incorporators are Thomas Cochran, James D. Potts, Clement A. Griscom and H. H. Houston of Philadelphia; George S. Webb and H. P. Linnell, of Camden, and Hobart Baird, of Woodbury.

PHILADELPHIA, July 18, 1887.

BOSTON.

Midsummer Vagaries.—Success of Electric Lighting in the Hoosac Tunnel.—An Electric Railway for Westfield.—The New Gamewell Police Signal System to be Tried in Boston.—The Boston Electric Club.—Boston Aldermen to Study Underground Systems.—Output of Telephones by the American Bell Co.—Resignation of President Forbes of the American Bell Co., Mr. Howard Stockton his Successor.—Mr. John J. Carty to go to New York in the Service of the Western Electric Co.

As a specimen of mid-summer journalism the following concerning the gentleman who provides for us the greatest show on earth will be interesting:

> The French inventor of a cable, said to be peculiarly fitted for use with the telephone, invites Mr. Barnum's attention to a scheme for connecting the Paris Opera with New York. He says that the telephone can be used for other purposes during the hours when the Opera is not tapped, and great profits may thus be earned. But his calculations for profit on the opera connections are far astray from the probabilities. For instance, he suggests that each person in an audience of two hundred be taxed $5 for each act. Thus a four-act opera would cost each hearer $20. To say nothing of the difficulty there would be in changing the audience or collecting the fee for each act, there is to be considered the small chance of gathering an audience every day in the hours when the performance could be heard in New York only, say from 3 to 7 P. M. Furthermore, there is the interesting fact that performances at the Paris Opera depend largely for their success on the scenery and ballet, the singers not ranking very high. Merely to hear a work in that great house is not a great musical treat, as matters stand. To hear it filtered through three thousand miles of wire, so to speak, is certainly not worth $20. The letter, which is signed by Jules Grunkey, looks very much like a guy on the veteran showman, if it be not a little guy by the veteran showman on the *Bridgeport Standard*, which first printed the letter.

An exploiter, who has compassed one continent and the great English-speaking nations with his invention, which, by the way, is understood to have been first intended for a screw-nail, and after getting his second wind, applied it as a telephone conductor, writes as follows to a local paper about telephoning between this country and Europe:

> Telephoning through a wire being only and simply a wave of reproduction, similar to an air wave of sound, or I might say a wave of the ocean, is perfectly practical for three million miles, and in fact more so under water than aerial, for disturbances atmospheric do not occur under water, nor do disturbances occur at a depth below a given sounding distance below the surface of the water, as the water at that depth is at rest. The small steel wire which I already have used for four years under water is a perfect reproducer, and will reproduce three million miles far better than the one hundred miles now so long in my service, and giving clear reproduction of conversation, and without any induction whatever. I am hoping after three—yes, four—years' delay by illness abroad, to be ready in the fall to resume my work, and trust I may yet live to carry it out.

Word comes from North Adams that the week and a half trial of the electric light service in the tunnel has proved entirely satisfactory. The Westinghouse incandescent light company is meeting with a competitor in the Brush arc light company, who are arranging a set of their lamps as an experiment. After they have been tested for a time a choice will be made between the two systems and the entire length of the tunnel lighted. It is also possible that the system will be continued to the local yard and depot, where numerous lights will be distributed.

Formal application was made on the 8th inst. to the authorities for the privilege of running an electric street railway in Westfield. Two New York men with capital to invest furnish the bulk of the money to secure the plant, and offer to take the entire $25,000 of capital stock in case the local business men who have pledged $6,000 or $8,000 to the enterprise wish to withdraw. A meeting is to be called Wednesday night, when it will be decided whether to hold on to the local stock or let the New Yorkers have it all to themselves.

Captain Coulter, of Police Division 4, acting under instructions from headquarters, has made arrangements to test the Gamewell police signal system in his district. This system differs from the one now in use in South Boston, and its inventor believes it to be superior to all others. The coming test will be made with a view of deciding this question.

A meeting of the newly-formed Boston Electric Club was held on the afternoon of the 21st inst., at 70 Kilby street. The club is organized for the purpose of promoting harmony between those engaged in various electrical interests. A constitution and by-laws were adopted, and the following-named officers elected: President, Frank Ridlon; vice-presidents, W. J. Hammer, Thos. D. Lockwood, W. B. Hosmer, H. J. Pettengill; secretary, Allan V. Garratt; treasurer, Herbert H. Eustis; historian, W. J. Hammer; executive committee, C. N. Ransom, S. E. Barton, B. S. Flanders, A. F. Mason, F. H. Sawyer, W. J. Daniels, Thomas Roche, C. N. Woodworth, John D. Gould, E. M. Rice, Jr., A. F. Upton, C. J. H. Woodbury, W. Brophy, W. I. Barker, F. M. Gilley; membership committee, A. H. Chapman, M. M. Slattery, Alexander Robeson, Sewell Smith, J. T. Moriarty; entertainment and reception committee, P. H. Alexander, F. A. Gilbert, R. F. Ross, Dennis J. Hern, Samuel Sias, J. E. Talbot, George W. Adams.

A committee was appointed to secure suitable quarters.

Before adjournment the president said the members of the club should remember that they were working for a common cause, namely, the advancement of practical results in electric work, and that the common end in view was to impart such knowledge to would-be investors in electric enterprises as would enable them to form the same judgment in this investment as they are able to form in other commercial enterprises. The object of organizing the club, he continued, is to promote a better feeling between those interested in electrical pursuits. The discussion of matters of interest will add to our knowledge of the requirements best adapted for promoting the general business in which we are engaged. Together with insurance men, we hope for a common end, the advancement of electrical lighting in the direction of

Digitized by Google

safety to the property of those using electricity as a lighting medium.

Mr. A. H. Chapman, superintendent of private lines of the New England Telephone Company, receives names for membership. The club seems to be in a strong, healthy condition, and no doubt will prove a success. Nothing appeals more strongly to the membership of a club than a good dinner, but to *maintain* such an institution a good *digestion* is absolutely necessary; hence the necessity of providing an intellectual superstructure over the culinary department; if the two are evenly balanced the whole man is supplied. In a promiscuous club the intellectual is not apt to predominate. Just here is a difficulty, and one which the "electric clubs" now forming in the principal cities will have to make a note of. A "stomach" club runs to decay in a short time, and benefits nobody. The finer elements composing the electrical profession would soon sift out from such a club. Better things are to be hoped and expected for the electric clubs; they can be made to serve the social tendencies of their members, and also prove helpful to the accumulation of knowledge.

On the 27th ult. the municipal joint committee on underground wires, in response to an order of inquiry as to the feasibility of placing all electric wires underground, reported that in view of numerous complaints made concerning poles and wires, it would seem that a remedy should not longer be delayed. The only effectual method of relief that suggests itself at present is the placing of wires underground, and this plan, it is claimed, has not yet been sufficiently perfected to admit of its adoption in some branches of the business with any degree of success. The system of underground wires is in successful operation in other cities of the country, and the committee recommended the passage of an order authorizing them to visit the cities of New York, Brooklyn, Philadelphia and Washington. The order was passed.

This is supposed to be a little junket. When the report of the committee was reached Mr. Whitmore, of Ward 12, moved to limit the expenditure to $500, but the motion was lost by a yea and nay vote of 22 to 25. The order was then amended by limiting the amount to $800, and passed in concurrence. This was in the Common Council. When the order came before the Aldermen on the 5th inst. Alderman Carroll made some remarks in criticism of what he called the niggardly economy of the Common Council. He regarded the sum of $100 for each member of the committee to be inadequate.

The amendment was concurred in without any negative votes, and Alderman Carroll afterward offered an order, which was passed, authorizing the committee on electric wires, which is a standing committee of the aldermen, to visit the cities named to inspect electric wires, the expense, not exceeding $300, to be charged to the contingent fund of the Board of Aldermen.

The committee consists of Aldermen Maguire, Carroll and Sullivan. They also compose the membership on the part of the aldermen on the joint committee on underground wires. The arrangement as thus completed is that as of the joint committee, these aldermen get their share of the $800, which the "niggardly economy" of the Common Council provided, and also $300 besides.

It is to be hoped the committee will receive more information than a recent committee inspecting the new reservoirs of the Water Works did; at least one of them, Mr. O'Toole, we will call him. He seemed out of place and uncommonly thickheaded until the return in the cars. While gazing out of the window at the works he saw something that gave him great pleasure, and exclaimed: "That's the foinest patch of praties I've seen the day!"

The American Bell Telephone Co.'s statement of the output of telephones for the month ended June 20, and the year to date, is as follows:

June.	1887.	1886.	Increase.
Gross output	6,971	4,581	2,390
Instruments returned	1,598	1,216	382
Net output	5,373	3,365	2,008
Dec. 1 to June 20.			
Gross output	28,663	21,635	7,028
Instruments returned	11,114	9,262	1,852
Net output	17,549	12,373	5,176

At the directors' meeting of the American Bell Telephone Company, July 12th, Mr. Wm. H. Forbes resigned the presidency of the company and Mr. Howard Stockton was elected to the position. Mr. Forbes remains as a director. Mr. Forbes's retirement is on account of a need of more leisure than the requirements of the office afford. Mr. Stockton is the treasurer of the Essex Manufacturing Company, and a large stockholder in the American Bell company, a lawyer of ability, and the treasurer of the Cocheco, Salmon Falls and Essex manufacturing companies. He has held these latter positions for some time, and is well known in Boston business circles as a man of excellent judgment and high executive ability. He has for a long time been a large holder of Bell telephone stock, and has always taken an active interest in the affairs of the corporation. In assuming the presidency of the company, he proposes to pursue, in every particular, the present policy of the management, and no changes in any department are contemplated. As matters now stand, Mr. Stockton will take his new position just as soon as Mr. Forbes and the board of directors can make certain necessary arrangements, or some time by or before October 1. Mr. Forbes will still remain on the board of directors. Mr. Forbes has done great things for the Bell company; he came into the management of its affairs when money and the interest and support of capitalists were greatly needed; through his influence strong financial aid flowed to the company, and it became one of the most prosperous of corporations. It is understood that Mr. Forbes has made a fortune in the business.

Mr. John J. Carty, for several years the superintendent in charge of the operating room of the Boston Telephone Exchange, has resigned to enter the service of the Western Electric Company. He will be located at New York, and his special work will be in connection with the cable work of the Western Electric Company. Mr. Carty will be greatly missed, as the present fine condition of the Boston Exchange is due to his intelligent and faithful supervision. He has done good service as an inventor, having patented several ingenious and meritorious devices relating to telephony. Success may be expected to follow Mr. Carty in his new field of work.

BOSTON, July 18, 1887.

CHICAGO.

Break-up of the Carbon Combination.—Prospective Sharp Competition for the Chicago Electric Light Contracts.—The Death of Mr. A. C. Holland.—The Chicago Electric Club.—Success of "The Western Electrician."—Mr. C. H. Macliile Assumes the Western Management of the "Electrical World."—The Western Electric Company.—The Proposed City Tax on Telephones Declared Illegal.—Prof. Gray's Telautograph.—Troubles of the Central Union Telephone Co. in Indiana.--The American Cushman Telephone Co.

RECENT advices from St. Louis and Cleveland point to the disruption of the United Carbon Companies; in fact, the Parker-Russell Co. put the matter bluntly in a circular letter dated July 15th, quoting carbons at the old prices and soliciting orders direct, by saying they have decided that no one can attend to their business so well as themselves. The Boulton and Cleveland companies, at Cleveland, are said to have made large sales within the past few days at low rates. We believe that all consumers will be glad to see the combination broken. It commenced operations a few months ago in a high-handed way, under the leadership of E. C. Hawks, agent, by getting control of the old and leading manufactories of carbon points and then immediately doubling prices. The shoe has not pinched much, because large dealers have been protected by large contracts at old prices, and they have protected their customers. With the running out of those contracts came the recent agitation and the proposals of the gas men at St. Louis and the electric light companies at New York to make their own carbons. But now that the pool is broken the business will probably be left in the hands of the old and experienced manufacturers, and carbons furnished at prices satisfactory to them and their customers.

The different electric light companies will undoubtedly have a tussle over the sale of the plant for lighting a part of the river and bridges, bids for which will be called for in the course of a few days. It is well known how hard these companies fight for business, particularly for large city contracts, where the precedent is so valuable. May the best win in this case. The present limit of expenditure is $15,000 for lighting the river and bridges from Halsted street on the North Branch to Halsted street on the South Branch, and from these points to the mouth of the river. For this will be purchased dynamo capacity for 100 full arc lights, with 100 double-carbon lamps.

Much more business with the city than this is in view, however, as a vigorous effort is making to secure the lighting of the whole length of the river and all the streets in the city, and under these circumstances what electric light company would not work hard for the first contract and the advantage point to be gained by the satisfactory filling of it?

The many friends of A. C. Holland, and the firm of Johnson, Holland & Co., of which he was a member, were shocked to hear of his sudden death on the first day of this month. Only 25 years old, and with brilliant business prospects, it was shocking to learn of his death, as by lightning, in the spring time of life. The stroke came from an electric light current, the same murderous circuit, we are told, from which engineer Moeller got his death stroke a month ago. Mr. Holland was connecting a motor in circuit, for the purpose of operating a ventilating fan in the kitchen of a South Clark street restaurant. While working, thoughtless of danger, with his knee upon an iron trough, whose waste pipe made a good ground connection, he received the full force of the current, throwing him to the floor insensible. Every effort was made to revive him, but in a few minutes he breathed his last.

Permanent rooms have been selected by the Chicago Electric Club on the ground floor of the new building 225 Dearborn street. The committee who made the arrangements are to be compli-

Digitized by Google

mented upon their choice, as the location is central, being opposite the post-office, and the rooms, which are open to the members at all times, convenient for business and social meetings. The first meeting was held there July 11th, and a large number of the members of the club, with some visitors, listened to an interesting paper on "Unworked Territory," read by C. C. Haskins. Mr. Haskins, by way of illustrating the opportunities of electric light people for entering new fields, spoke clearly of the dangers to life and property from the use of oils on vessels; then he showed the advantages, both to owners and insurers, of the use of electric lights in the boats and on the docks. Mr. C. O. Mailloux, in commenting upon the main thought of Mr. Haskins's paper, showed the advantage of the use of storage batteries in connection with dynamos. An interesting discussion was then brought about by Mr. H. Ward Leonard's request that those present give their views of such cases as have come under their observation of loss of life from electric light currents. The electricians present could not agree upon the exact cause of death from strong currents, and Mr. Badt was unanimously requested to prepare a paper on this subject, to be read at the next meeting of the club.

The Western Electrician meets with a warm welcome, both in advertising and subscription patronage. The first three issues that have appeared show careful and good editing, and in its typographical appearance it has no superior among weekly journals.

The *Electrical World* is to be congratulated upon having secured the services of Mr. C. H. Maclilie as western manager. Mr. Maclilie comes from Kansas City, but he is no stranger in Chicago, and we apprehend that in his hands the interests of the *World* will be well looked after.

The Western Electric Company have secured contracts, of which they feel very proud, for a complete electric outfit for the mammoth new wholesale dry-goods house of Marshall, Field & Co. They will light the building throughout with 180 of their arc lights, and will introduce a telephone system with thirty stations, arranged so that any one station can call up and converse with any other station without disturbing the rest, no central switch-board or operator being required. Each floor will be protected by the electro-mercurial fire alarm, and will have electric call bells and other signals in abundance. The same company have recently fitted up the excursion steamer "Ivanhoe" with their electric lighting apparatus.

Your correspondent called attention in a previous letter to a proposed city tax on telephones, many members of the council putting themselves on record as in favor of taxing each instrument $25 per annum. The matter was referred to the corporation counsel, and he has settled it by submitting his opinion that the proposed ordinance is illegal.

It would be gratifying to be able to give your readers some exact information about the "telautograph," the latest invention of Prof. Gray, but he is not ready yet to have his process made public. Inasmuch as he has shown some of the results of its work to his friends, however, and they all express themselves as astonished at the invention, there can be no doubt but that the professor has something very interesting, if not revolutionizing. The writing is done upon a plate, with any kind of sharp-pointed instrument, and, by an electric current, is reproduced in fac-simile at a distance. There are old and well-known processes for accomplishing such work, but they have all been in the realm of the impracticable. What Prof. Gray claims is that his process is practical for every day use, and he is reported as saying that he is inclined to think the machine will be required in all cases where absolute accuracy in the delivery and filling of an order is required, and that it will eventually supersede the present system of telegraphic communication. Some interesting correspondence in the daily papers has been called forth by the published accounts of this invention, some writers seeming to think it worth while to put themselves on record already as knowing that there can be nothing original about Gray's invention, in spite of the fact that his process has not yet been made public.

The following is from an incisive reply by J. E. McKibby to a letter recently published under the title of "Gray's Invention a Chestnut":

The article headed "Gray's Invention a Chestnut," signed "Coates," does not reflect in the least on Gray's ability as an inventor, or upon his invention, neither of which need any defense nor laudation from any man's pen. In 1850, before Gray had completed the carpenter trade, F. C. Bakewell, of London, brought out his "Copying Telegraph," for transmitting anything that could be put on paper, by means of a pen, and reproducing it at the distant end. In 1856, Abbe Casselli, of Florence, Italy, introduced his pantelegraph (autographic), which before its final abandonment attained a speed of sixty messages per hour, averaging 20 to 25 words each, on the Paris-Lyons circuit. Then came Meyer, of Austria; Lenoir, of France; W. E. Sawyer, of Washington, D. C.; Amos E. Dolbear, Smith, Edison, *et al.*, up to 1879, when E. A. Cowper, of London, acquired United States patents for his invention. In 1881 Leggo gave his invention to the world, upon which was formed the American Autographic Telegraph Company, now the Postal Telegraph and Cable Company. In 1886 Robinson, of New Jersey, acquired United States patents for a machine very similar to Cowper's, who also acquired fresh patents in 1886. Except Robinson's, they are all housed where the public won't mistake them for O'Donovan Rossa's "missionaries." The history of the telephone is analogous. Borseul, 1858; Reis, 1867; Yeates, Varley, 1865; Meucci, Cushman, Drawbaugh, Vanderweyde, Pickering, Cross, etc., all had "telephones," "talking telegraphs," etc., but Bell made it commercially practicable in '76 and '77, twenty-five years after Cushman, in Racine, Wis., claims to have talked yards and yards of talk over miles and miles of wire. The dates and names on the autographic telegraphs herein given are from well-known electrical text-books treating of telegraphy, and are to be found in all electrical libraries and the Chicago public library.

Prof. Gray has consented to deliver a course of lectures at the Lake Forest University the coming collegiate year. His subject will be electricity and magnetism.

The Central Union Telephone Co. are having no end of trouble in their efforts to make a living in Indiana. Their change from rental to toll system is meeting with a great deal of opposition, and they have been obliged to close a number of small exchanges. At Lafayette the city council has passed a resolution depriving them of all privileges unless they conform with the law of the state; at Goshen they were ordered the first of this month to remove all of their poles and wires from that city within sixty days, and at Indianapolis there has been continual trouble. The plan of the Central Union Co. is to make each subscriber a toll station, the charge to subscribers to be three cents per connection, and to others five cents, but each subscriber is required to purchase four dollars' worth of tickets per month, with the stipulation that all tickets unused at the end of each quarter will then become void. And the only alternative the company offers is the removal of the instruments. To illustrate the temper shown in opposition in some places, some facts about South Bend, where the C. U. company has had a flourishing exchange with over 200 subscribers, are of interest. As soon as the change was made an agreement was signed by most of the subscribers that they would go without telephone service rather than accept the toll system, and a meeting was held in the council rooms, with Mayor Loughman in the chair, at which the following resolutions were adopted:

Resolved, That we regard the toll system offered by the Central Union Telephone Co. as one which to accept would require us to abandon dignity, forget truth, lay aside business principles, and array ourselves as in fact aiding to violate law; abandon dignity by making our offices and our homes public stations, agreeing to neglect our business and serve the public on demand, and have our homes ever ready with open door, all for the compensation of 5 per cent. of 60 per cent. of a nickel, equal to 15-100 of a cent for each service, an estimated aggregate probability of ¼ of a cent per day, for rent, fuel, light and personal attention—a proposition so clearly a farce and so impractical that to agree to it would be to consent and obligate to do that which we know we would not, and hence untruthful, and because undignified and untruthful and meaningless upon our part, unbusiness-like to sign such a contract, as it may have its full meaning and carry its full obligation in the hands of those to whom given; aiding to violate law, as there is now in force upon our statute books an act forbidding the taking of more than $3 per month for the use of a single telephone, and the requirement that $4 worth of tickets must be taken per month as a condition upon which a telephone may be had, as in fact but a rental of $4 per month as a minimum with a probability of much more.

Resolved, That the common council of South Bend be respectfully requested to notify the Central Union Telephone Co. to comply with the laws of the state limiting the charge for one telephone or instrument to $36 per year or $60 for two instruments, or remove their instruments and wires from the streets and alleys of the city by July 15, 1887.

The request to the common council was complied with, and on the 11th inst. the Central Union company were ordered to remove all their poles and wires from the city by the 10th of August. The cry for a competing telephone was heard by the American Cushman Telephone Co., who offered to open an exchange if they were given such a city franchise as the old company were losing, and could open with not less than 150 subscribers. The result of the agitation at this writing is that the Central Union company have about 12 lines in operation and the Cushman company have not secured the requisite number of patrons, and the people are getting along as best they can with messenger boys and the telegraph.

The American Cushman Telephone Co. have their headquarters in Chicago, and are doing a lively business. They sell telephone instruments, similar to the Bell, to whoever will buy them, and a good-sized exchange at Findlay, Ohio, is operating with their instruments. The Bell company appear to be somewhat inactive now in chasing infringers, but it is expected that they will take hold of such matters vigorously as soon as their case in the Supreme Court is decided.

CHICAGO, July 19, 1887.

SAN FRANCISCO.

The Postal Telegraph Company's Pacific Lines.—Canadian Obstruction.—Mr. N. S. Keith Supplying Dynamos and Motors.—Electric Railway Notes.—Contention Over Electric Light Bills in San Francisco.—Mr. F. B. Converse and the American Electric Light Co.—An Old Time Telegrapher.—Unjust Aspersions on the Course of Mr. Frank Jayres.—An Operator Under Charges of Misbehavior in Connection with Pool Sellers.

A RIPER field for a healthy competition than California was and is, has never been presented to an opposition company. Yet, considering the fact that the Western Union is doing an unprecedented business, and the Postal people know it, no move is being made nor contemplated, apparently, toward extending their lines south or east by some other and more reliable route. Mr. Robeson is concentrating all his energy upon a local business northward and is doing well, but his American energy is handicapped by Canadian apathy. He cannot place any reliance on an eastern connection *via* Canada; nor does he make any effort to secure eastern business save to notify the friends of the Postal once or twice a week "that the Postal is O K east." Do the

Digitized by Google

Canadians want to boycott American despatches as they do American ships from getting bait? Or are they so strongly entrenched in their ante-deluvian isolation that such an outlet to civilization is not desirable?

The agency of the Canadian Pacific railway has had photographic views of the scenery along that route on exhibition in this city. "The apparatus don't lie." We see a telegraph pole with one small cross-arm; one insulator holds a wire the other is empty, but about three feet below the cross arm is a cleat nailed to the pole, and a wire is loosely and slovenly attached. One soliloquizes: "No wonder the Postal have no wire east." Mr. Robeson has secured the Rocky Mountain Telegraph Co.'s wire from Medicine Hat, on the Canadian Pacific, to Salt Lake. This will pass through Spokane Falls, Helena, Butte and Northern Utah towns, and if it stands it will be a valuable local connection.

By the way, your correspondent is in receipt of several notes asking him to criticise the local management of the Postal and others. His criticism of the management of the Postal last February stands good, and he has had no reason to change it, but would remind the gentlemen that he is not, and never will be, the tribune for personal malignity, and he would remind them that vilification is not criticism. Were he that way inclined he could "unpack his heart with words and fall a cursing like a bawd" on his own account.

N. S. Keith has an office in the Nevada building and a factory in the Pacific Tool Company's establishment, where he superintends the construction of his dynamos. He is manufacturing many for various trades and enterprises, and it is believed he may furnish the San Jose electric railway with dynamos and motors.

The road-bed for the above road is being built, and it is now only a question of a month before the second electric road in California will be in operation. I have heard nothing authentic lately of the Sutro experiment, but I am told that it will be all right soon.

E. P. McCarthy, the city gas inspector, and a man who owes his place to the influence of the gas company, refused to audit the bill of the California Electric Light Co. for outside lighting because he claimed a 7-16 carbon was used instead of ½-inch and ⅝. Mr. Roe had N. S. Keith and others as experts, who demonstrated to the satisfaction of the supervisors that the diameter of the carbon had nothing to do with the brilliancy of the light, influencing only its duration, as the intensity of the light depended on the force of the current. Mr. McCarthy wants the writer to loan him "Prescott on the Electric Light." The bill was paid.

The American Electric Light Co. were sending Mr. F. B. Converse to Australia. He was here with his wife and son about to embark when he received a telegram canceling the engagement, thus throwing him back considerably. Pending a satisfactory explanation for this sudden change, he is working with the Western Union company.

It is a pleasure to meet a representative old-time operator, one who, at least, had the benefit of a common school education, and by his deportment demonstrated that he had associated with gentlemen. It was a pleasure of this kind a few days since to meet Mr. T. S. Davidson, ex-chief operator of Buffalo, N. Y., for the Western Union. Mr. Davidson is to be sent to Los Angeles to fill an important position, where a man of his calibre has been very much needed for some time.

Again the malignant shaft of disappointment, envy, hatred, or jealousy—call it what you will—has been hurled at Mr. Frank Jayres through the operators' organ. If it contained the truth, as regards Mr. Jayres, it might be allowed to pass unnoticed, but it says "he withheld the extra for two months after Col. Clowry allowed it." This is a base falsehood, and does the man—who paid salaries of $90 and $100 per month, and endeavored to keep it up, when eastern superintendents were only paying $60 to $75—a gross injustice. He may have faults, and one of them may be a blind confidence in men who abuse it through an insatiable desire to exhibit their ephemeral prominence, but that he is not the friend of the operators, or that his superior in executive ability holds a similar position in the Western Union, may be emphatically denied, and 25 years experience ought to qualify the writer to judge correctly. That the operators have many grievances in San Francisco must be admitted—their service is akin to slavery. Who is to blame? Mr. Jayres has no reports save the daily reports submitted to him by self-interested chief operators. Is there an office in the world where men working press wires for 6 to 10 hours a night would during a "let up" be taken from thence to clear up a city wire? It seems quite certain that if Mr. Jayres knew the actual state of affairs, redress would surely follow; but, no, being harshly treated by a chief operator and lacking the courage to go beyond him, the operators must resort to misrepresentation, and sometimes vilification and slander.

The newspapers and the bookmakers are making a great hubbub about one of the bookies being fleeced of $400 on "Kingdom," and an operator was suspended because he held the "post" message for a correct check. When the matter is thoroughly investigated it seems likely that the operator will be reinstated. If a skillful flank movement had not been made and suspicion directed towards him, it might have been towards some of the "favored few" who hug these wires and boast of their winnings. It is hardly fair to all parties for operators who work at "bucket-shops" in the day time to be employed as operators at night, having access to all "tips," etc. It has a greedy aspect at best, even if they were honest, but flesh is weak and money is enticing.

SAN FRANCISCO, July 21st, 1887.

ELECTRICAL NEWS AND NOTES.

RAILWAY TELEGRAPH SUPERINTENDENTS' ASSOCIATION.

SIXTH ANNUAL MEETING AT BOSTON, JULY 13TH AND 14TH.

THE sixth annual meeting of the Association of Railway Telegraph Superintendents was held at the Tremont House, Boston, on Wednesday, July 13th.

The following members were present:—

Benjamin, F. H., N. & W. R. R., Lynchburg, Va.
Blair, S. K., N. Y. C. & St. L. R. R., Fort Wayne, Ind.
Boyd, L. A. L. D. & S. R. R., Indianapolis, Ind.
Bogart, S. S., N. Y. W. S. & B. R. R., Weehawken, N. J.
Chevalier, C. M., N. Y. & N. E. R. R., Boston, Mass.
Cohen, I., H. & T. C. R. R., Houston, Tex.
Darlton, C. A., R. & D. R. R., Washington, D. C.
Davison, C. B., C. St. P. M. & O. R. R., St. Paul, Minn.
Drew, P. W., C. & E. I. R. R., Chicago, Ill.
Goode, J. B., Moberly, Mo.
Hill, J. H., Southern Kansas R. R., Lawrence, Kas.
Hilton, C. E., N. & W. R. R.
Higgins, T. J., C. C. C. & I. R. R., Cleveland, O.
Holmes, W. J., N. Y. L. E. & W. R. R., New York, N. Y.
Kinsman, G. C., Wabash R. R., Decatur, Ill.
Lang, G. L., N. Y. & N. E. R. R., Boston, Mass.
Lattig, J. W., L. V. R. R., Mauch Chunk, Pa.
Leonard, M. B., N. N. & M. V. R. R., Richmond, Va.
Morley, W. K., C. & A. R. R., Bloomington, Ill.
Magiff, M., Central Vt., R. R., St. Albans, Vt.
Reynolds, C. C., I. & St. L. R. R., Mattoon, Ill.
Ross, J. N., N. Y. & N. E. R. R., Boston, Mass.
Robinson, H. C., B. & L. R. R., Boston, Mass.
Rowell, H. N., B. & M. R. R., Boston, Mass.
Selden, Charles, B. & O. R. R., Baltimore, Md.
Swift, A. R., C. R. I. & P. R. R., Chicago, Ill.
Shaw, J. B., N. Y. P. & O. R. R., Jamestown, N. Y.
Sheldon, L. F., M. P. R. R., Sedalia, Mo.
Smith, N, E., N. Y. N. H. & H. R. R., Hartford, Ct.
Simpson, G. E., C. M. & St. P. R. R., Milwaukee, Wis.
Torrey, E. E., M. C. R. R., Detroit, Mich.
Topping, C. E., L. I. R. R., Long Island City, N. Y.
Williams, G. T., N. Y. C. & St. L. R. R., Cleveland, O.

The meeting was called to order at 10:30 A. M., by President A. R. Swift, of the Chicago, Rock Island & Pacific railroad, who expressed great satisfaction at the full attendance. The fact that so many had traveled long distances in order to attend, was, in his opinion sufficient evidence of the interest that was being shown in the work of the association.

The report of P. W. Drew, secretary and treasurer was read and accepted. On motion of Mr. Lang it was voted that invitations to participate in the meeting be extended to the superintendents of the Western Union, Mutual Union, Baltimore & Ohio, and United Lines companies, who were located in Boston. Mr. Lang also announced that the committee on electrical railway appliances appointed at the last meeting had secured a few such devices which were on exhibition in an adjoining room. Among them was a very complete exhibition of telegraph and signaling instruments from the factory of Albert L. Russell, of Boston, the Waters-Sweeny Telegraph and Telephone Switch, manufactured at Terre Haute, Indiana, also the magneto signaling apparatus of the Pennsylvania Steel Co.

Mr. Kinsman, from the committee on an automatic recorder for railway telegraph lines, reported that the committee had met and experimented a little with a view to the solution of the problem of keeping a complete record of the business of a line, but they had not been able to satisfy themselves. In the opinion of the committee a register operated by a clock might be arranged to answer the purpose.

Mr. Sheldon said that he considered the matter of such importance, that he hoped to hear it thoroughly discussed. He believed that in the experience of all present there was no more important object to be attained in railroad telegraphy than the securing of a record of everything that passes over a circuit. In all cases of error there is a dispute which could be at once settled if a record existed showing what had actually passed over the line. If nothing better could be done, he should be in favor of going back to the use of registers. Upon motion of Mr. Leonard, Mr. R. W. Pope, was given the privilege of the floor, as Secretary of the American Institute of Electrical Engineers, and invited to describe the system adopted by the Gold and Stock Telegraph Co., for accomplishing a similar purpose.

Mr. Pope stated that in the process of distributing stock quotations, the plan originally adopted had been continued to the present time, which was briefly the transmission of quotations from the stock exchange over a Morse wire to the central office where they were received by sound, and read off from the

Digitized by Google

operator's manuscript by the transmitting operator of the printing system. At an early stage in the experience of the company, it had been found impossible to locate the errors which arose in the transmission of these quotations over the Morse wire. A self-starting register was first introduced, which was placed in charge of the operator in the superintendent's office. A spring circuit closer was so arranged under the register weight that an alarm was rung when it had nearly run down. At intervals of half an hour, the time of day was marked on the tape. This arrangement was satisfactory when the register was in perfect order, but the proper adjustment of the mechanism had become one of the lost arts, and it was frequently found that the record was incomplete through failure of the stylus to give a smooth and regular impression. By reason of other duties the operator could not give it continual attention, so that with the growth of the business, and the corresponding importance of a perfect record, it had been found advisable to run the register continually, and entrust its care to an operator whose chief duty it was to keep it in order. The complete record of the day's business is thus preserved and filed away for reference.

Mr. S. S. Bogart suggested the use of an ink register for such a purpose as being more reliable in its operations.

Mr. M. B. Leonard proposed using paper having lines marked across it, to indicate the time at which any communication might have passed.

Mr. C. Sheldon said that some of his circuits were idle a considerable portion of the time. It was important to know whether wires were worked to their full capacity. Lines were sometimes constructed uselessly at great expense. Such a record would also show how many unnecessary messages were sent. He was satisfied that 33 per cent. of the business sent over the Missouri Pacific lines was telegraphed unnecessarily. He had introduced blanks which the operators were instructed to enclose with such messages as they might consider unnecessary, which were sent to headquarters for examination. He had had as many as 150 messages returned that finally had to pass. Mr. G. C. Kinsman agreed with Mr. Sheldon as to the evil spoken of, and had found the system as adopted of returning unnecessary messages very satisfactory. Such a message was sent to the head of the department from which it emanated, and if it was finally decided that the message could have gone by train mail without detriment to the service, the sender was called upon to pay the tolls.

Mr. S. S. Bogart inquired where the operator was to be found who could decide as to the importance of a message by merely reading it.

In his opinion the adoption of such a rule would make more trouble than it would prevent. He suggested that the gentlemen should call at the Western Union main office in New York, and witness the operations of the chronograph register which showed the minutest variation in the record of seconds of time, and had never failed to operate satisfactorily during years of service.

On motion of Mr. W. K. Moreley, it was voted that a committee of three be appointed to visit New York, and examine the apparatus mentioned at 16 Broad street and 197 Broadway. The president appointed Messrs. C. Topping, S. S. Bogart and M. Magiff, as such committee.

The discussion again drifted into the question of unnecessary telegraphing, regarding which a committee had been appointed at a previous meeting.

Mr. Sheldon was of the opinion that the highest officers were at fault, but although their names were signed to the telegrams it usually proved to be the officer's clerk who had prepared the message. Many messages referred back to him as useless had upon investigation proved to be important. If it was known that messages were liable to examination he believed that it would tend to lessen the number offered.

Mr. Charles Selden said that he had kept careful watch of this class of business over his lines, and was satisfied that four-fifths of it originated with the general officers of the road, and one-fifth with himself. The exercise of judgment in endeavoring to discriminate in this matter was liable to lead a person into deep water. As an instance he might mention a message to the general passenger agent, saying that "Miss Louise will meet you at train." This was considered as foreign to the management of passenger traffic, but upon investigation it was proved to him that the lady mentioned was the principal of a large female seminary, and that the object of the appointment was the fixing of a reduced rate of transportation west for the students at the close of the term. He was heartily in favor of the introduction of such a recorder as had been mentioned upon all train wires. The introduction of such an instrument was merely a question of time. It could be driven either by a weight, spring, or motor. It was his desire to introduce every possible protection against error or delay in the service.

Upon the suggestion of a member the president added Messrs. W. J. Holmes and Charles Selden to the committee, making five in all.

Mr. J. W. Lattig considered it a very simple matter to introduce the proposed recorders. It was merely a question of expense. Where several lines concentrated a good operator could attend all of the registers. His practice was to select a relay office where good men were employed. They examined the files and selected such messages as were considered useless.

Mr. Sheldon said that he had one office where eleven lines centered where the business handled amounted to 2,500 messages daily. Many messages were referred to him, but he believed 1,000 of the messages were of so little importance that they might be held, and they never would be inquired for. Although he had paid considerable attention to this subject he had not succeeded in stopping more than 5 per cent. out of the 33⅓ which he had mentioned.

Mr. Selden said that on the Wabash system business became very heavy by reason of messages regarding line freight being sent over their wires, because they worked better than the others. He was being continually called upon to reduce expenses. At one time they handled 150 messages regarding a shipment of tea, and the Chicago, Burlington and Quincy road finally secured the freight.

Mr. Holmes believed that all had met with varying success in connection with this matter. He had been at it for 30 years. It was his opinion, however, that the railroads needed more telegraphing rather than less, and that facilities should be provided for handling the increasing volume of business. What prospect was there of stopping any of the telegraphing of the general traffic agent? They should make the best possible use of their facilities, and if necessary, ask for more wires.

Mr. Sheldon agreed in the main with Mr. Holmes, but mentioned a case where the general passenger agent sent a message of about 400 words, regarding an excursion, and after the bargain had been closed, he sent another of the same length, arranging for the train, although the date of the excursion was two weeks in the future.

Mr. Simpson remarked that the expense of this unnecessary business was not the only point to be considered, but also the burdening of the wires and the consequent delay of more important business.

After some further discussion of the subject, Mr. Lang announced that an excursion to Nantasket Beach had been arranged for the afternoon, and as the heat of the room was oppressive, and many of the members were fatigued from their long journeys, an adjournment was taken until the following morning at half-past nine o'clock.

THURSDAY, JULY 14TH.

The meeting was called to order by President Swift at 9.45 A.M. After the election of several new members, Mr. Lang, chairman of the Committee on Symbols, was called upon to report. He stated that the committee appointed a year previous to the one which he represented, in undertaking to propose a substitute for the existing Morse character for the cipher—a long dash—had bitten off more than they could chew, and that in this respect he agreed with the old committee. They had held several meetings and consulted with representatives of the commercial lines as well as nine-tenths of the railroad lines centering in New York and Boston. From several letters which he had received from different managers and superintendents the various opinions were given that the old character was no more productive of error than a new one would be; that operators should be required to space properly; that there is no necessity for a change. General Superintendent Leslie suggested the character — — - — and objected to the character - - - which had been mentioned by the previous committee, believing as he did, that additional spaced letters should be avoided.

Mr. Selden believed that a change should be made, and remarked that the United Press had introduced several new characters which were gradually coming into general use. If necessary, he could upon his return make any change recommended, which would go into use from Philadelphia to Chicago. He was heartily in favor of the adoption of some symbol by the association.

Mr. Sheldon inquired what objection there was to the adoption of the Continental alphabet.

Mr Bogart said that in a test of four days made by the Western Union Telegraph Company some years ago, the Morse alphabet came out 1,728 words ahead. The ratio of speed was as 42 to 38 words per minute in favor of the Morse.

In reply to an inquiry from Mr. Sheldon as to the Continental alphabet being less liable to error, Mr. Bogart replied that it was not, and that he considered himself a good operator with either alphabet.

Mr Topping remarked that the efforts of the committee had arrived at naught. They had found no desire on the part of the Western Union Company to do anything in the matter.

Mr. Lang added that there was but one opinion in the association as to the desirability of a change, but no person has stepped forward and presented a symbol that will stand. Each one appears to have an opinion of his own as to how the reform should be made. This was the third meeting at which the subject had been discussed and nothing had been accomplished.

Mr. Drew believed that the trouble did not arise from the

Digitized by Google

use of the long dash for a cipher but where the letter L is used as an abbreviation.

Mr. Selden observed that it occurred elsewhere, as for instance where a car might be numbered as 0094 according to a system in vogue upon some railroads.

Mr. Sheldon said that an alphabet was like a language, it was not built up but it grew. The united authorities of the world had tried to introduce a universal pronoun but it could not be done. He knew of but one instance in which a word had been deliberately and scientifically coined which had proved a success, and that was the word "telegram."

Mr. Selden said that Mr. Walter Phillips, of the United Press, had taken this subject up and made it a special study. He talked it over with his men, and when they were satisfied with the desirability of a new character it was introduced and used wherever their wires ran.

Mr. Sheldon stated that in 1853 a telegraph convention was held at Washington. As one result of their deliberations it was recommended that the characters C and K of the Morse alphabet be transposed. An attempt was made to carry this idea into practice, but so many serious errors occurred that it was finally abandoned. He remembered a single instance where a message addressed to E. W. Klarc & Co., was undelivered for several days because no one knew the address which was intended for E. W. Clark & Co.

Mr. Topping thought it rather humiliating for the association to confess that they could not substitute a symbol for either the cipher or letter L, but he believed there ought to be a change. The committee had labored faithfully in the work. The confession of all who were interviewed was to the effect that an attempted change would merely make matters worse.

Mr. Sheldon said his operators worked with the Western Union offices, and that the contract between the companies required that the Western Union regulations should be complied with, which rendered it still more difficult to make the proposed change.

Mr. Selden believed that the Western Union officers recognized the strength they derived from their alliance with the railway lines, and that they were inclined to be progressive, and would adopt the new symbol as soon as it was convenient. It was his opinion that if a suitable character was introduced by the association it would come into general use within six months.

Mr. Lattig stated that the Western Union company had about 11,000 offices, of which 9,000 were railway offices, therefore if any considerable number of railroads introduced the new symbol as suggested, it would go into use. On the Lehigh Valley road blanks are used, designated by such numbers, for instance as Q 053. It was frequently found impossible to designate such blanks by telegraph without error.

Mr. Holmes felt certain that the Western Union company would co-operate in the work. The Erie people had made some attempts at innovations, but Prof. Morse had constructed his alphabet upon such scientific principles that they had not been able to improve it.

Mr. Sheldon remarked that he had instructed his operators to send whatever was written. All kinds of abbreviations were used on the Missouri Pacific, but he believed a universal system of abbreviations would be an improvement

It was finally voted that a committee of three be appointed to devise a symbol for the cipher to take the place of the present long dash, and submit the same to the members for approval. The president appointed Messrs. Selden, Topping and Holmes to serve as such committee.

Messrs. J. B. Shaw, G. T. Williams, and G. E. Simpson were appointed a committee on resolutions.

Upon motion of Mr. Selden, it was voted that the next meeting of the association be held at New York city, on July 14th, 1888.

Mr. Topping extended an invitation to the members to visit Manhattan Beach at that time, offering transportation for each of them, and space in the sea.

The association then proceeded with the election of officers for the next year, the result of which was announced as follows:

President, G. L. Lang, of Boston, Mass.; Vice-President, G. C. Kinsman, of Decatur, Ill.; Secretary and Treasurer, P. W. Drew, of Chicago, Ill.

A general discussion on signals led Mr. M. B. Leonard to remark that electricity was becoming a most important factor in railway service. It was used for lighting, and signal connections with locomotive cabs, and for other purposes. The Chesapeake and Ohio company was using electric signals at two or three tunnels. He believed that it was for the interest of the telegraph superintendents to enlarge their field of usefulness. While abroad we find telegraph superintendents rated as electrical engineers, and giving their attention to various electrical appliances in connection with the railway service, we were not extending our knowledge beyond the realm of the telegraph.

Referring to the use of electric signals, Mr. Lang stated that the New England company had about nine miles of continuous signals in operation which had operated satisfactorily until the road-master had ballasted the track with cinders which caused trouble.

Continuing, he announced that the Boston & Maine railroad company had extended the association the courtesy of a complimentary trip to Point of Pines in the evening.

A committee of three, consisting of Messrs. Bogart, Selden and Shaw, was appointed to examine and report upon various electrical appliances in connection with the railway service.

At the request of ex-president Swift, President Lang then took the chair, receiving from the hands of Mr. Swift the gavel of the association, a miniature telegraph pole of mahogany fitted with cross arms and pins, supported in a silver standard. It was originally presented to Mr. Swift by B. R. Verbyck, master car builder of the Rock Island railway.

In accepting the gavel, President Lang said that, although proper attention to the duties of the office required considerable work, he considered it a compliment, and believed that the holding of such an office should be properly appreciated by the incumbent as it was looked upon as giving a standing that was not only beneficial to the person accepting the position but to the company by which he was employed. He stated that the New England roads had given very little attention to their telegraph service, some of the most important companies depending upon the Western Union. He promised to continue as he had begun in doing all in his power to promote the welfare of the association.

Mr. Swift called the attention of the association to the existence of an operators' union which had been organized in the west, and although he had no knowledge of the extent to which it had been developed in the east, he believed that its growth was detrimental to the interests of the companies. The organization had been in existence about two years. Its headquarters are at Laporte, Iowa, where the officers devote their entire time to the interests of the order. The ritual of the order was read by Mr. Swift, and a general discussion followed, during which it appeared that organizing officers were working in the east, and that there appeared to be a considerable amount of ability shown in extending its operations. No definite action was taken but it appeared to be the sense of the meeting that upon their return to their homes, the members would look over the ground, and possibly step on the head of the animal, to see at what distance his tail would wiggle. The fact that it had been asserted that the order included some superintendents in its ranks led to a mutual glance about the room, and a felling that the absence of some of the members might be thus accounted for. The principal objection raised to the formation of such an order, was the fact that it entirely prohibited the teaching of telegraphy to any person without permission of the Grand Chief Telegrapher.

A discussion then ensued as to the advisability of placing the time service of railroads under the jurisdiction of the telegraph superintendent.

The committee on resolutions reported the following:

Resolved, That the thanks of the Railway Telegraph Superintendents' Association be returned to the Old Colony Railway Co. for an invitation to visit Nantucket and Martha's Vineyard, and to the Boston & Maine Railway Co. and to the New York & New England Railway Co. for courtesies extended; also that thanks be extended to the proprietors of the Tremont House for the hospitalities extended

Resolved, That the thanks of this association are hereby extended to G. L. Lang, for his unremitting efforts in making this meeting pleasant and profitable, and one long to be remembered.

Upon the adoption of the above resolutions the meeting at 1:30 P. M. adjourned.

Twenty-two new members were added to the association during the two sessions. The untiring efforts of Mr. Lang to provide for the entertainment of the members while in Boston, were so heartily appreciated that a large proportion of them devoted Friday to an excursion to old Plymouth, on the steamer Stamford, which was thoroughly enjoyed by all. A day on the salt water was quite a treat to many of the gentlemen, and the briny waves were calmed down so that there was not the slightest drawback to the enjoyment of the occasion, beyond a mild application of prohibition, which is naturally looked for in the land of the Puritans. There was a larger proportion of ladies in attendance than is usually seen at electrical gatherings, and they were profuse in their appreciation of the attention shown them by Mrs. Lang and her daughter, who devoted themselves to the skilful piloting of the visitors on various shopping and sight seeing trips through the intricacies of Boston's streets, squares, alleys and courts.

REGULATING POLE LINES IN NEW YORK.

RULES TO BE IN FORCE UNTIL CONDUITS ARE READY FOR THE WIRES.

The Board of Electrical Control (the re-organized Subway Commission) met July 15th, and began work by adopting the following rules governing the erection of telegraph and telephone poles and wires, which had been approved by Gen. Newton, Commissioner of Public Works:

No two lines of poles shall be on the same side of any street or avenue.

Digitized by Google

No two lines of poles bearing conductors for similar electrical service shall be on any street or avenue.

Electric light poles shall be of iron, at least 26 feet in height, with a diameter of not more than eight inches at the base, and having cross arms of wood, with glass, porcelain, or rubber insulators, and painted a uniform color.

Poles for telegraph, telephone, and other similar wires shall be at least 60 feet in height.

Poles shall be placed upon the sidewalk, as near the curb as possible, and no pole shall be placed within 10 feet of any lamp post or other pole.

All existing regulations of the local authorities in regard to the placing of poles and stringing of wires are to continue in force.

All wires shall be fastened upon poles or other fixtures with glass, porcelain, or rubber insulation.

No wires shall be stretched within one foot of any pole without being attached to the same with glass, porcelain, or rubber insulation.

No wires shall be stretched within 20 feet of the ground, or within four feet of any building, except when attached thereto with glass. rubber, or porcelain insulation.

No arc electric light or power wires shall be stretched over any part of any house or other building.

The companies or persons owning or controlling poles in any street or avenue shall allow the same to be used by other companies or persons operating conductors for similar electrical service when authorized so to do by the board on tender of proper compensation, to be determined by agreement between the companies or persons interested. In default of such agreement, the amount of such compensation shall be determined by the board. This rule imposes a contract on the part of each company or person owning or controlling the poles in any street or avenue, not only with the board, but also with each company or person who shall under its terms be qualified to demand the privileges it confers.

All permits of the board for overhead wires and fixtures are granted only pending the providing of underground accommodations in the neighborhood of the street or avenue for which the permit is granted.

Any member or officer of the board, and every inspector employed by it, as well as every member of the police force of the city, shall be entitled to examine permits under which work of any kind is being done.

No permit shall be granted for the erection of any overhead structure nor for the renewing of any lines already existing in any street, avenue, or highway in which underground accommodations for the service have been provided or are being provided.

All poles now standing or to be hereafter erected, shall be branded or stamped with the initials of the company owning them, at a point not less than five or more than seven feet from the street surface.

When an old pole is taken down, it must be removed from the street the same day.

New poles must not be brought upon any street more than two days in advance of their erection.

Any pole that shall be on any street more than two days shall be removed by the Bureau of Incumbrances of the Department of Public Works at the expense of the party owning it.

All electrical companies or persons having poles in the public streets shall give a bond to the city, in a reasonable amount, to be determined in each case by the board, conditioned for the payment of the cost of renewing dangerous and abandoned poles, and also for the payment of the expense of restoring the sidewalks and pavements where the same have been disturbed or injured in consequence of the erection or removal of any poles owned by them.

The violation of any of the rules and regulations of the board shall operate *ipso facto* as a revocation of the permit held by the company or person guilty of such violation.

A resolution was adopted requiring the chief engineer to furnish reports concerning the condition of poles and wires as to safety, and to suggest such changes as will conduce more to the safety of life and property. The engineer is given the power to appoint eight inspectors for this work at $4 each per day and a chief inspector at $250 per month. Acting Mayor Beekman voted against the salaries, as he considered them extravagant.

Chief Engineer Kearney submitted plans for the digging of conduits, which, he believed could be dug at from three to seven feet from the curb.

JOHNS HOPKINS UNIVERSITY.—COURSE IN ELECTRICITY AND MAGNETISM.

The programme in physics at Johns Hopkins University for 1887–88 includes the following announcement:—

SPECIAL COURSE IN ELECTRICITY AND MAGNETISM.

This is intended for advanced students, who have already completed their general education, and who are willing to devote two years to the study of electricity and of subjects connected with it. A knowledge of mathematics through the differential and integral calculus is necessary, and the instructor must be satisfied that the student is otherwise in a position to benefit by the course. An acquaintance with French and German is most desirable.

While a knowledge of the theory is important in every branch of applied science, this is especially the case with electricity, in which the applications increase so rapidly and the practice so frequently changes, that without sound theoretical knowledge it is impossible to keep abreast of the advance of the science, or even to understand the inventions which are daily made public. Yet theoretical knowledge is unfruitful without knowledge of the means of its application, such as can only be obtained by experimental work.

The course, then, is intended to teach the theory of electricity with a special view to its practical application, to familiarize the student with electrical instruments and methods of experiment, and to give him a knowledge of the theory and practice of those applications that are in successful use and with which he will probably work.

Dr. Duncan will give the following courses:

Electricity and magnetism. First year's course.

Three times weekly through the year.

The lectures for the first year are intended to give clear physical ideas of general principles, with the mathematical interpretation necessary to enforce and apply them.

The laboratory work will include measurements of resistance, currents, potential, capacity, etc., with voltameter and calorimeter work, and the student will be familiarized with the instruments used in electrical measurements, galvanometers, electo-dynamometers, resistance coils, condensers, etc. On finishing this work, the student will be given experiments, such as the construction and measurement of standard cells, the determination of the magnetism of iron, the determination of specific inductive capacity, etc., which will bring into use the methods he has already studied.

Besides the work in electricity, lectures on mathematics and such other subjects as the student requires, will be given.

There will be a weekly meeting for the purpose of discussing articles of interest appearing in the electrical journals.

Electricity and magnetism. Second year's course.

Twice weekly through the year.

In the second year will be given the theory of dynamos, motors, the transmission and distribution of energy, the telegraph, the telephone, storage batteries, etc.

The laboratory work will include the tests and running of dynamos and motors, the efficiency and practical working of secondary and primary batteries, photometer work, testing of telegraph lines, experiments on the electrical transmission of energy, telephone work, etc., with such original investigations as the student is able to undertake. There will be a weekly meeting for the discussion of the current literature of the subject.

The student will have time for other selected studies, and in either the first or the second year of this course he must take the second year's undergraduate work in general physics or its equivalent.

At the end of the second year an examination will be held, and on passing it the student will be given a certificate stating that he has taken the course in applied electricity and has passed the required examinations.

NEW YORK ELECTRICAL SOCIETY.

1887.

ELECTRICAL EXHIBITION OF THE AMERICAN INSTITUTE OF THE CITY OF NEW YORK.

September 28th to December 3d.

GENERAL COMMITTEE:

Prof. A. M. Mayer.	W. A. Vail.	M. M. Davis.	A. G. Holcombe.
J. M. Pendleton.	Dr. Van Der Weyde.	Ed. C. Davidson.	Sam'l Insull.
G. M. Phelps, Jr.	Geo. G. Ward.	T. A. Edison.	F. W. Jones.
L. J. Phelps.	G. Worthington.	Francis Forbes.	A. A. Knudson.
R. W. Pope.	Jos. Wetzler.	A. C. Fowler.	C. L. Levey.
Dr. M. J. Roberts.	T. Wolcott.	Jabez Feary.	Dr. Otto A. Moses.
J. A. Seely.	C. W. Hull.	D. R. Garden.	W. Maver, Jr.
Alf. Shedlock.	Dr. Bartlett.	H. R. Garden.	W. Marshall.
C. S. Shivler.	D. H. Bates.	Dr. Norvin Green.	T. C. Martin.
H. A. Sinclair.	C. S. Bradley.	H. D. Hall.	Robt. Grimshaw.
W. C. Temple.	F. B. Crocker.	Jas. A. Hamblet.	C. O. Mailloux.
H. C. Townsend.	C. A. Cheever.	Geo. A. Hamilton.	

SPECIAL COMMITTEES:

Committee on Finance,

Francis Forbes. Frank W. Jones. Geo. G. Ward.

Committee on Space.

A. C. Fowler. Geo. M. Phelps. Jr. W. C. Temple. C. G. Curtis. R. W. Pope.

Committee on Transportation.

G. Worthington. W. A. Vail. C. L. Levey.

Committee on Electrical Installation.

C. O. Mailloux. Geo. A. Hamilton. J. A. Seely. C. L. Edgar. C. S. Bradley. J. A. Barrett. A. A. Knudson. C. L. Clark. Dr. Waite.

Committee on Entertainment.

A. A. Knudson. Dr. O. A. Moses. Dr. Van Der Weyde. E. C. Davidson. H. A. Sinclair. Prof. A. M. Mayer. T. A. Edison. Jas. A. Hamblet.

Committee on Exhibits.

Dr. M. L. Roberts. C. O. Mailloux. Dr. O. A. Moses. S. S. Wheeler. Geo. A. Hamilton. W. B. Vansize. M. M. Davis. J. F. Kelly. T. Wolcott. F. B. Herzog. Alf. Shedlock. Wm. Hochhausen A. Knudson. Leo Daft.

Committee on Correspondence and Publication.

Dr. Van Der Weyde. Alf. Schedlock. C. E. Stump. G. M. Phelps, Jr

Committee on Historical Apparatus.

Dr. Van Der Weyde. A. G. Holcombe. J. A. Hamblet.

RULES AND CONDITIONS.

Classification.

The Electrical Exhibition will be divided into Six Sections, as follows;

Section I.—Production of Electricity.

1.—Dynamo and Magneto Electric Machines.
2.—Primary Batteries.
3.—Thermo Electro Apparatus.
4.—Static Electric Apparatus.

Digitized by Google

Section II.--Apparatus Requiring Powerful Currents.

1.—Electric Motors and Transmission of Power.
2.—Electric Railways.
3.—Storage Batteries.
4.—Electric Illumination.
5.—Electro-Metallurgy and Electro Chemistry.
6.—Miscellaneous Applications of Powerful Currents.

Section III.—Apparatus Requiring Comparatively Weak Currents.

1.—Fire and Burglar Alarms, Annunciators, Watchman's Time Detectors, Electric Bells, etc.
2.—Electric Telegraphs, Telephones, Microphones, Photophones and Radiophones, and other Apparatus for Electrical Communication.
3.—Electric Registering and Signaling Apparatus.
4.—Applications of Electricity to the Mechanic Arts.
5.—Applications of Electricity to Heating and Ventilation.
6.—Electric Clocks and Time Telegraphs.
7.—Electric Medical Apparatus of all descriptions.
8.--Applications of Electricity to Writing and Printing.
9.—Electrical Toys.
10.—Miscellaneous Applications of Small Currents.

Section IV.—Electric Conductors.

1.—Electric Light and Power Conductors.
2.—Telegraph and Telephone Wires and Cables.
3.—Insulating Materials, Electrical Joints and Connections.
4.—Electric Underground Wire Systems.

Section V.—Electrical Measuring Apparatus.

1.—Voltmeters and Ammeters.
2.—Galvanometers, Rheostats, etc.
3.—Condensers, Switches, Keys, etc.

Section VI.

1.—Historical and Miscellaneous Exhibits.
2.—Educational and Bibliographical.

Duplication of articles will not be permitted, except by written consent.

The Managers of the Institute do not agree to allot any special amount of space until the articles for which space has been desired are *within the building*, unless agreed to in writing.

Delay in Occupying Space Granted.

In cases where space has been allotted to an exhibitor, and the exhibitor has delayed in fully and properly occupying said space for twenty-four hours, then said space may be forfeited by the Board of Managers of the Institute, and assigned to another exhibitor on the same conditions.

Changes in Location—And Space Granted.

Changes as to position and space granted, will be made as often as may be required to properly group and classify the goods, or for the better apportionment of space; which change shall be entirely within the duties and power of the General Superintendent of the Institute.

Charge for Space in Main Building.

The *Minimum* charge for space *granted* on floor or table will be *Ten* dollars, this for space not in excess of *sixteen square feet*. If the exhibit for which this amount of space has been granted should not properly use or cover the same, then so much of said space as in the opinion of the General Superintendent of the Institute is not properly utilized, may be allotted to another exhibit; in such an event no deduction will be made in the original charge of ten dollars.

For space granted in excess of sixteen square feet on floor or table, the charge will be as follows: for the first *sixteen square feet, Ten dollars;* for *each additional square foot ten cents.*

The above applies to all floor and table exhibits excepting spaces granted in Machinery buildings, in which *Machinery is operated;* The following schedule shows the rates:

16	Sq. Feet	of	Space	or	less,	(minimum charge)	$10.00
20	"	"	being	4	additional	feet at 10c. per ft.	10.40
30	"	"	14	"	"	" "	11.40
40	"	"	24	"	"	" "	12.40
50	"	"	34	"	"	" "	13.40
60	"	"	44	"	"	" "	14.40
70	"	"	54	"	"	" "	15.40
80	"	"	64	"	"	" "	16.40
90	"	"	74	"	"	" "	17.40
100	"	"	84	"	"	" "	18.40
125	"	"	109	"	"	" "	20.90
150	"	"	134	"	"	" "	23.40

For any other number of feet same proportionate charge.

Charges for Space in which Machinery is Operated in Machinery Building.

For spaces granted in which machinery is *operated* the charge will be as follows: For space not in excess of *Fifty square feet* the charge will be *Ten Dollars*, if in *excess* of said amount the charge will be *Fifteen Dollars.*

If space granted be not fully utiiized, and space is needed for other exhibits, the General Superintendent of the Institute shall re-apportion so much space granted as he may consider equitable to other applicant or applicants, charging only for space in actual use on terms as above stated.

Foreign Manufactures.

Exhibits of goods of foreign manufacture can only be admitted upon special application, approved by the Board of Managers of the Institute.

Payment at Time of Making Application.

A check or money order for Ten Dollars should be sent at time of making application, the balance of charge for space will be due and payable when space is granted.

Arrangement of Goods.

The arrangement of all goods, *as to height to which they may be piled, as well as to space occupied*, shall be under the charge of the General Superintendant of the Institute, who shall have power to direct the arrangement of all goods, in such manner that the safety of visitors or the harmony of the exhibition may not be interfered with.

Steam Power.

Steam power will be provided to operate machinery only when approved by the management.

The management shall also determine upon the hours when said machines are to be in operation, and may, in all cases, regulate the amount of fuel to be supplied to boilers or other apparatus.

Shafting, Pulleys, Gas and Water Pipes.

The Managers will erect the main line of shafting, and provide the main line of water and gas pipes. All pulleys upon main shafting must be approved by the General Superintendent of the Institute, both as to size and method of fastening to shaft.

All pulleys, counter-shafting and belting must be furnished by exhibitor. No connections will be permitted with the steam, gas or water pipes, except by consent of the General Superintendent of the Institute, and then only at the expense of the exhibitor, and upon his agreement to pay weekly in advance for such gas or water as he may consume. In event of any dispute, the General Superintendent of the Institute may order the connection with said steam, gas and water pipes to be severed, without any liability for loss or damage to the exhibitor.

Rules and Regulations for Electric Wiring.

All electrical conductors for lighting or power purposes shall be installed according to the rules and regulations of the New York Board of Fire Underwriters. The disposition of these conductors, as well as all others, for whatever purposes required, shall be under the direction of the General Superintendent of the Institute, or his accredited representative, whose decision shall be final in all cases. The General Superintendent of the Institute shall have the right to make such changes in the disposal of wires, and require such tests as in his judgment will conserve the best interests of the exhibition.

Reception of Goods.

The buildings will be opened on 2d avenue for the reception of machinery on the 12th day of September, and for the reception of other goods on the 20th day of September, at the 3d avenue and other entrances.

Shipment of Goods.

All articles must be directed to "The American Institute Electrical Exhibition, Third Avenue, 63d and 64th Streets, New York." The name and residence of the exhibitor and the list of contents must be given on the package, freight and other charges on which *must be prepaid.*

Opening and Closing.

The exhibition will be formally opened to the public at 2 P. M., Wednesday, the 28th day of September. It will be opened each secular day thereafter at 10 A. M., and close at 10 P. M., finally closing at 10 P. M., Saturday, December 3d.

Correspondence.

Letters relating to the exhibition should be addressed to "Joseph Wetzler, Secretary, P. O. Box 3265, New York," who will send blanks and give any desired information to parties intending to become exhibitors.

We call the attention of exhibitors to the rules and regulations of the American Institute, in addition to the foregoing under which exhibits are accepted.

Tables.

Tables on main floor will be furnished, without charge, which will be of the uniform width of four feet. Tables other than these must be furnished by the exhibitor and approved by the General Superintendent of the Institute. Should an exhibitor desire to furnish his own table, notice must be given at time of making application for space.

Signs.

Signs shall only be allowed at place of exhibit. One sign only will be allowed exhibits on floors, if against walls or between arches, or if more than one is wanted, written consent must be had. Signs must be on a dark ground; where practicable they may be painted on both sides. Signs on *white ground* will not be allowed. Signs against walls, shall not exceed six feet in length by three feet in width. Signs between arches, or against sides of arches shall not exceed four feet in length by one foot six inches in width. Signs on floors of either of the buildings may rest on exhibits, or on show cases containing exhibits, *not elevated above*, and shall not exceed three feet in length by one foot in height. In cases of exhibits of furniture, machinery, and such other articles as are not placed in show cases, or piled up, the height of signs from floor shall be regulated by the General Superintendent of the Institute. Signs on show cases forming part thereof, if not of greater size than 400 superficial inches, or if in any way violating these rules, must be approved in writing. Signs will not be allowed to hang or project over passage ways. Under no circumstances will signs be allowed to obstruct the view or interfere with the harmony of the exhibition. The regulation of all matters relating to signs shall be within the powers of the General Superintendent of the Institute.

Circulars and Cards.

Circulars, Cards or Notices can only be distributed from the place assigned to the exhibitor, and then only such as relates to the goods there exhibited. None shall be distributed except they are approved by the Board of Managers of the Institute. The Managers reserve the right to prohibit the distribution or display of any circulars, cards, notices or signs, which they may consider objectionable. The exhibit of any person who refuses to comply with this rule will be removed from the exhibition.

Sales.

Sales may be made and orders taken for goods without charge, provided delivery is not made on the premises.

Sales and Delivery on Premises.

Goods can only be sold and delivered in such parts of the Exhibition Buildings as shall be set apart for said purposes by the Board of Managers of the Institute, excepting when goods are manufactured by machinery on the premises; then, if agreed to in writing with the General Superintendent of the Institute, they may be sold at the place where manufactured.

The fee charged for license to sell and deliver on premises must be paid at the time when application is made for the privilege, *it will not be accepted in installments nor will licenses be granted to sell on a percentage of sales.*

Licenses to sell and deliver on premises, when article to be sold has been approved may be had on application to the General Superintendent of the Institute, and payment of fee of $200 for such right; this for goods *not made on premises.* Licenses for goods *actually made on premises*, if approved, may be had on payment of fee of $50, this reduction in license fee, being made to encourage actual processes of manufacture. Solicitations to purchase which may annoy visitors, or other exhibitors, will not be permitted. The Managers of the Institute reserve the right to cancel any license to sell and deliver which may have been granted, upon tendering the pro-rata proportion of fee paid, estimating from the date of such tender to date of closing of exhibition; estimating such time in the proportion to the whole term of the exhibition, which tender whether accepted by the

Digitized by Google

licensees or not, shall abrogate and annul any rights to sell and deliver which licensee may have had; for which act neither the Institute, or any Manager, officer or employé shall be liable to said *licensee* for any loss or damage whatever.

Removal of Goods.

No article shall be removed from the building during the exhibition, unless by authority of the Board of Managers of the Institute.

Fires, Lights and Drapery.

Neither fires nor lights will be allowed except on written consent of the General Superintendent. Drapery used by exhibitors for the decoration of their spaces must be approved by the General Superintendent of the Institute.

Tickets.

Exhibitors' and employés, tickets are issued without charge and are not transferable. If transferred or loaned, the doorkeeper is instructed not only to refuse admission but to retain the ticket, which by this violation of the rule is forfeited. Admission may be had upon an exhibitor's ticket by an employé, provided the exhibitor sends with said ticket a note requesting admission for bearer, and certifying that the bearer is charged with the care of his goods. In case of the loss of a ticket, the loser is required to give immediate notice in writing to that effect to the Secretary of the Board of Managers of the Institute.

Employés' tickets will be issued upon an order of the General Superintendent of the Institute to such exhibitors only, who, in his opinion, require the constant services of an attendant. In no case shall he issue more than one employé's ticket, unless the exhibitor is engaged in operating machinery, or conducting some process of manufacture within the Exhibition.

Receipt for Goods.

A receipt will be given for goods when received and in order, which receipt will be accepted as evidence of ownership at close of exhibition, and upon which *only* goods will be delivered. In the event of the loss of this receipt immediate notice must be given in writing to the Secretary of the Board of Managers of the Institute and his acknowledgement of said notice taken in writing, that delivery may not be made upon presentation of the lost receipt.

Goods at Risk of Exhibitor.

All goods and cases in which they were packed are at the risk of the exhibitor; and it is expressly understood that the American Institute, Board of Managers, or any Committee, officer, or member thereof, is in no degree liable for any loss by fire, theft, or damage of any kind whatever.

Care of Exhibits.

Exhibitors will be required to keep their spaces and exhibits clean and in good order, and in cases when they are covered at night, to remove such covering by 10 o'clock, A. M., and not to cover same earlier than 10 minutes before closing hour.

All sweeping and cleaning of exhibitors' spaces must be done before 10 A. M.

Goods—When to be Removed.

All goods must be removed within one week after close of the exhibition, or they will be placed on storage at expense and risk of the owner or exhibitor.

Failure to Hold Exhibition.

Should the Exhibition Building be destroyed by fire previously to the date fixed for the reception of goods, or should it be impossible from any other cause, to hold the Exhibition, no exhibitor shall have any claim whatever against the American Institute, save and except for the return of any moneys he may have paid for entrance fee, or license to sell.

The Board of Managers of the Institute reserve the right to make such other "Rules and Conditions" as may serve to better regulate and govern the Exhibition.

Penalty for Violation of Rules.

Any Exhibitor or his representative who shall violate either of the foregoing rules or conditions, will be liable to the penalty of having his exhibit removed from the Exhibition, and his ticket of admission canceled. In case of the removal of an exhibit for cause above stated, the entrance fee paid will be returned, *the tender of which fee at any time* it is hereby agreed, shall be in full settlement of any and all damages, and all claims for loss arising from the removal of the exhibitor's goods, and cancellation of tickets of admission issued on his account. It is further agreed between the Board of Managers of the Institute and the exhibitor, that the said Board of Managers shall have sole power and right to interpret these rules and conditions upon which the exhibition has been accepted.

Improper Exhibits.

Any exhibit of goods which in the opinion of the Board of Managers of the Institute is of an improper or objectionable character, may at the option of said Managers, be removed at any time.

Improper Persons.

The Board of Managers of the Institute reserve the right to refuse admission to any exhibitor or employé whom they may consider an improper person, and also to remove the goods of such exhibitor.

ANOTHER TELEPHONE INFRINGEMENT SUIT DECIDED.

Judge Wallace, in the United States Circuit Court, Southern District of New York, handed down a decision July 21st, in the suit of the American Bell Telephone Co. against the Globe Telephone Co., to restrain the defendant from infringing the patent granted to Alexander Graham Bell, on March 7th, 1876. Judge Wallace granted the permanent injunction asked for by the Bell Telephone Co. His opinion is a long one, in which he says: "The Massachusetts courts held that Bell was the discoverer of the new art of transmitting speech by electricity, and in view of all the facts produced there is no reason why a permanent injunction should not be granted." In the answer to the complaint the defendant averred that they owned the patents of A. Meucci, who, they claimed, was the first inventor of the telephone. They claimed that so far they had never sold any telephones or manufactured them. The capital stock of the Globe Telephone Co. was $10,000,000, but from the evidence of witnesses very little of this was paid in. The directors of the company avowed that the reason they had not commenced business actively was because they did not wish to interfere with the Bell patents.

INSULATED RAIL-JOINTS FOR ELECTRIC SIGNALS.

In a communication to the *Railroad Gazette*, Mr. G. W. Blodgett, electrician of the Boston and Albany railroad, states that the wooden blocks formerly used for insulating the track sections for the automatic electric block signals, were abandoned on the Boston and Albany several years since, because they did not keep the rails well in place, and were not durable. Experiments with vulcanized fibre gave but little better results. The method now in use, consists in placing behind the fish-plate, a strip of "leatheroid" one-eighth inch thick, and moulded to fit the rail. The bolts are insulated from the rails by bushings of the same material, and a piece one-quarter inch long, of a size and shape corresponding to the cross-section, is placed between the ends of the abutting rails. The fish plates are planed off to allow for the space taken up by the leatheroid strip.

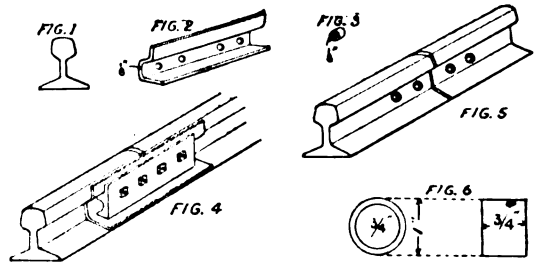

Figure 1, shows the piece of leatheroid between the ends of the rails and figure 2, the plate which insulates the splice-bar from the rail, figure 3, is the bushing which surrounds the bolt of which an enlarged section is shown in figure 6. Figure 4 shows the completed joint and figure 5 shows the joint before the splice-bar is put in place. Mr. Blodgett states that these joints hold the rails well and have proved to be very durable.

ELECTRIC ALARM SIGNALS ON THE BERLIN METROPOLITAN.

The Metropolitan railroad of Berlin has adopted the apparatus of Siemens Bros. for signaling from trains between stations. The stations being very near together the nature of the help required by a train signaling from an intermediate point it is not necessary to specify. In the case of a call the terminal station sends a locomotive at once, and it is sufficient to notify this station of help wanted, and to warn all other stations that a locomotive is to pass, coming from the extremity of the line. At each station, placed on a single wire, is an apparatus which consists of an electro-magnet, with the necessary mechanism, enclosed in a wooden case, below which are the call bells. On the face of the box is a dial, divided in two parts, one part having the names of the stations in black, the other the same names in red. Under the dial are two buttons, one below the other, and a crank which serves to set in motion the magnet. Turning the crank from left to right and pressing on the upper button, the index of the apparatus moves to the right; by turning the crank in the other direction the movement of the index is reversed. Pressing on the lower button, and turning the crank, sounds the bells. In calling for aid, therefore, the upper button is pressed, the crank is turned from left to right, until the needle is at the extreme point to which it can go, the lower button is pressed and the bells are sounded. Then by pressing the upper button and turning the crank from right to left the index is brought to the point on the dial containing the name of the station which calls for help. That is, the dial announces an accident, the index indicates the name of the station where help is required, as well as the terminal station from which it has been called, and the same signal appears all along the line.

ELECTRICITY "AS SHE IS TAUGHT" IN THE NEWSPAPERS.

The following is from a recent issue of a leading New York daily newspaper:—

TO RUN BY ELECTRICITY.

The Jersey City and Bergen Railroad will on Wednesday next move their cars with electric motors. President Thurston says that it will prove less expensive and bothersome than horse locomotion. The new motive power, contrived by Joseph Weiss, of Jersey City, has already been tested on the lines with the heaviest grades and found to work satisfactorily. A series of electric cells placed under the car seats feed batteries underneath the car. Three wheels are connected with the latter contrivance, two flanged or rail wheels, and a centre wheel which is flangeless. The rail wheels are charged with electricity, and are connected by a belt. The power is distributed by a small gear wheel, which makes 500 revolutions in harmony with a larger one of 250 revolutions, which in turn is connected with the friction or centre wheel, which makes 50 revolutions. With 30 cells the car can be driven 100 miles an hour, or as much slower as desired. The batteries will run it 15 hours and do the work of 12 horses. The cars will be lengthened five feet. It is proposed to employ the present drivers to run the new motors. At the opening, Wednesday, a number of distinguished guests will be in attendance.

THE BALTIMORE AND OHIO DEAL DECLARED OFF.

Mr. Garrett has published the following:—

ELBERON, N. J., July 20th, 1887

The Hon. William M. Singerly, Editor of the Record, Philadelphia:

DEAR SIR: In reply to your courteous inquiry as to the real status of the negotiations called by the press "the Baltimore and Ohio Deal," I beg to say that all such negotiations are terminated. The syndicate which was to acquire a

Digitized by Google

large block of the stock of the Baltimore and Ohio Railroad Co., in such a way as was believed would be beneficial to all the parties and railroads concerned, did not at the appointed time comply with their engagements, and all arrangements or negotiations with them are now absolutely at an end.

I have not purchased the stock of the Johns Hopkins University, as stated in some of the newspapers. I had an option on that stock, and also upon that of several other holders, but I have not exercised these options, nor do I intend to do so. The statement in some of the papers that I purchased large blocks of the Baltimore and Ohio stock is a mistake. As I have stated, I had options, but circumstances rendered it unnecessary to close them. The Baltimore and Ohio Railroad Co., its properties, including its large telegraph system and the ownership of its stock, remain now as they were at the opening of the negotiations.

The widespread public interest which these negotiations have excited and the many false and foolish rumors to which they have given rise justify me in departing from my usual course, and making this formal statement of their final termination. Thanking you for the kindly terms in which you have been pleased to refer to the Baltimore and Ohio Co. and its future, and acknowledging the correctness of your judgment and that of many other friends as to the propriety of making public this letter, I am, as ever, yours, very truly,

ROBERT GARRETT.

ELECTRIC LIGHT AND POWER.

The Sheboygan Gas Co. will erect an electric light plant at Sheboygan, Wis.

The Edison Electric Light Co. will erect a plant at Kansas City, Mo.

The Old Dominion Electric Light Co. will erect a plant at Manchester, Va.

The American Electric Manufacturing Co., of New York, are extending their business to Australia. A complete plant with engines, dynamo machines, lamps, boilers, wires and other apparatus was shipped last week for Sydney. An American plant is to be immediately installed there. A company has been organized with a capitalization of half a million of dollars to control the American apparatus in Australia.

The Columbus Electric Light Co. will make improvements to their plant at Columbus, Ohio.

The Badger Electric Light Co. is making improvements to its plant at Racine, Wis.

The Brush Electric Light Co. is building a new plant at Detroit, Mich.

The St. Cloud Water and Power Co. will erect an electric light plant at St. Cloud, Minn.

The Edison Electric Light Co. will build a station at Columbus, Ohio, to cost $15,000.

The Tuscaloosa Coal, Iron and Land Co. will erect an electric light plant at Tuscaloosa, Ala.

The Racine Gas Light Co. will erect an electric light plant at Racine, Wis.

Durgin & Merrill contemplate erecting an electric light plant at Quincy, Mass.

An electric light plant is contemplated at Augusta, Ga. W. A. Wright, agent.

An electric light plant will be erected at Grand Rapids, Mich. Address, Jno. L. Shaw.

Foreign.

Austria.—An electric railway is projected for Karlsbad, and a concession for this undertaking has already been obtained by a company from the minister of commerce. Messrs. Siemens & Halske will probably install a central electric lighting station at Graz. The central station in Salzburg, and a great portion of the distributing plant are already finished, and it is expected that regular work will begin in August. The first trial run of the central electric light station in the Schenkenstrasse, in Vienna, was made with perfect success a few days ago. When this installation is in regular work, it will bring up the total number of glow lamps running in Vienna and suburbs to 32,000.

Belgium.—The Societe Industrielle de l'Electricite of this town have established, under the direction of M. Goffin, a central station for the lighting of the commune Berchem-Antwerp. In this case the area over which the lighting extends is so large and the lights are so scattered that it would not have paid to put down a gas supply, and direct electric lighting on the parallel system would have been still less feasible. The company have, therefore, adopted the distribution by means of transformers placed at the principal lighting centres in the district, and all supplied from a central station, the distance to which varies between two and two and one-half miles. The potential maintained at the station is about 1,000 volts, the slight increase of pressure necessary to compensate for the loss through resistance if the current sent out is augmented being performed automatically. All the transformers are in parallel connections, and the lights are quite independent of each other.

France.—The Compagnie Francaise d'Eclairage Electrique inaugurated, late in June, their station Drouot, the first central station for the supply of electricity erected in the heart of Paris. The present capacity is reckoned for 1,500 lamps fixed, and the current is supplied by four compound wound Gramme machines, the distribution being on the three-wire system for 100 volts Swan lamps of 10, 16 and 32 c. p. The pressure will be kept on the mains night and day, and a battery of 120 accumulators has been provided in order that the machinery need not be kept running continuously. The Cauderay meters are employed, and the consumers will be charged according to the number of ampere-hour[8] supplied. Motive power at the station is derived from two steam engines.

Spain.—The municipality of Leon offers a monopoly of fifty years for lighting the town with 260 glow lamps of 20 c. p., burning each on an average 2,200 hours per annum, for the sum of £720. The contractor will be the only person allowed to fix cables or wires for the purpose of electric lighting, whether for public or private lights. No price is stipulated for private lighting. Tenders, which will be opened on the 6th August, are to be on the basis of a diminution of the number of years of the monopoly. Besides the lighting of the streets, the municipal offices are to be lighted by glow lamps of 20 c. p., to be paid for at the rate of about 0.4 pence per hour. The total number of lights likely to be used, including the theatre and private houses, will not exceed 600, but a price of 0.6 pence per lamp hour would probably be obtainable.

NEW INCORPORATIONS.

The Jamestown Electric Light and Power Company, Jamestown, N. Y., Millard White, Boston, Mass., and others, incorporators.

The Thomson-Houston Electric Light and Power Co., Buffalo, N. Y. Capital stock, $500,000. Richard K. Noye, and others, incorporators.

The Ridley Electric Light and Power Co., Ridley Park, Pa. Capital stock, $10,000. Robert Craven, incorporator.

The Palmer Electric Co., Palmer, Mass. Capital stock, $30,000. John F. Herry, and others, incorporators.

The Jerseyville Electric Light and Power Co., Jerseyville, Ill. Capital stock, $20,000. John G. Schwarz, and others, incorporators.

The Pittsfield Illuminating Co., Pittsfield, Mass. Capital stock, $25,000. William Stanley, Jr., and others, incorporators.

The Woburn Electric Light and Power Co., Woburn, Mass. Capital stock, $18,000. N. J. Simonds, and others, incorporators.

The Farrington Electric Light and Power Co., Farrington, Me. Capital stock, $5,000. Austin Reynolds and H. H. Rice, incorporators.

The Hyde Park Electric Light Co., Hyde Park, Ill. Capital stock, $250,000. Hugo Hoffman, and others, incorporators.

The Edison Electric Light and Power Co., of Petoskey, Mich. Capital stock, $13,000. H. O. Rose, and others, incorporators.

The Philadelphia Lighting Co., Camden, N. J. Capital stock, $3,000,000. Thos. Cochran, and others, incorporators.

G. F. Card, H. K. Lindsey, George W. Howell, Thomas F. Corry, W. A. Detrick, W. H. Mackoy, and others, have incorporated the Card Electric Brake Co., at Covington, Ky. The authorized capital stock is $1,000,000.

MANUFACTURING AND TRADE NOTES.

The Westinghouse Electric Co. has orders ahead to keep its full force of 775 men working steadily until November 1. Among the electric plants under construction are those for Colorado Springs, Easton, Md., Sheffield, Ala., Beaver Dam, Wis., Denver, Portland, Me., Charlestown, W. Va., Galveston and Austin, Tex., and a number of others. Work has been commenced on the new eight-story addition to the plant on Garrison alley, and will be pushed as fast as possible, as the company need more room. The electric plant put in by this company to light Hoosac tunnel is completed and doing its work satisfactorily.

The Standard Underground Cable Co., one of the numerous Westinghouse industries, closed on the 11th inst. a contract with the city of Denver for $40,000 worth of underground wires. The order will be filled at once. Nearly as large a contract was made by the Union Switch and Signal Co., with the Kings County (N. Y.) Electric Railway for interlocking and other appliances which this famous institution turns out for scientific railroading.

The old railway and telegraph machinery and supply house of E. S. Greeley & Co., successors to L. G. Tillotson & Co., has reorganized as a corporation under the name of The E. S. Greeley & Co., dating from July 1st. Messrs. Greeley and Parker retain their interest and position in the management. Mr. W. M Goodyear, in charge of the electrical department; Mr. Joseph Bailey, western sales department; Mr. E. S. Riggs, home office, railroad department, and Mr. J. W. Sands, accountant and cashier, are admitted as members of the corporation, and will retain the management of their respective divisions of the business.

The Capital Gas Co., Sacramento, California, are buyers of a 50 light plant of the Waterhouse system.

The Willimantic Electric Light Co., of Willimantic, Conn., operating the Waterhouse system, have doubled their dynamo capacity, and are adding lamps daily, running both the arc and incandescent on same wire.

The Pennsylvania Steel Co., at Steelton, Pa., made during the month of June (25 working days) 1,005 frogs, 722 switches and 553 switch stands, besides a large number of magneto crossing signals.

Digitized by Google

ELECTRIC RAILWAYS IN AMERICA.

Now in Operation.

APPLETON, WIS.—Appleton Electric Street Railway.
BALTIMORE, MD.—Union Passenger Railway Co.
DENVER, COL.—Denver Tramway Co.
DETROIT, MICH.—Detroit Electric Railway Co. Highland Park Railway Co.
KANSAS CITY, MO.—Kansas City Electric Railway.
LOS ANGELES, CAL.—Los Angeles Electric Railway Co.
MONTGOMERY, ALA.—Capital City Electric Street Railway Co.
PORT HURON, MICH.—Port Huron Electric Railway Co.
SCRANTON, PA.—Scranton Suburban Railway Co.
WINDSOR, CAN.—Windsor and Walkerville Electric Railway Co.

Constructing or Under Contract.

Ansonia, Conn.
Binghamton, N. Y.
Harrisburg, Pa.
Ithaca, N. Y.
Lakeside, O.
Lima, O.
Los Angeles, Cal.
Mansfield, O.
New York, N. Y.
Pittsburg, Pa.
Richmond, Va.
San Diego, Cal.
St. Catherines, Ont.
St. Joseph, Mo.
Woonsocket, R. I.
Wilmington, Del.

New Roads Projected.

Asbury Park, N. J.
Allegheny, Pa.
Atlanta, Ga.
Bangor, Me.
Biddeford, Me.
Boston, Mass.
Bridgeton, N. J.
Brookline, Mass.
Bayonne, N. J.
Brooklyn, N. Y.
Butte, Mont.
Birmingham, Ala.
Carbondale, Pa.
Chicopee, Mass.
Cincinnati, O.
Coney Island, N. Y.
East Cambridge, Mass.
Findlay, O.
Gratiot, Mich.
Flushing, N. Y.
Fort Smith, Ark.
Jacksonville, Fla.
Lincoln, Neb.
Middletown, Conn.
Muncie, Ind.
New Brunswick, N. J.
Newton, Mass.
Newton, Kan.
Orange, N. J.
Pelham Park, N. Y.
Philadelphia, Pa.
Plainfield, N. J.
Pensacola, Fla.
Port Chester, N. Y.
Reading, Pa.
Rockaway, N. Y.
Scranton, Pa.
San Francisco, Cal.
San Jose, Cal.
Selma, Ala.
St. Louis, Mo.
So. St. Paul, Minn.
Tiffin, O.
Wichita, Kas.
Worcester, Mass.
Winston, N. C.
Westfield, Mass.

INVENTORS' RECORD.

Prepared expressly for THE ELECTRICIAN AND ELECTRICAL ENGINEER, *by* Pope, Edgecomb & Terry, *Solicitors of Patents for Electrical Inventions*, 11 *Wall Street, New York city.*

CLASSIFIED LIST OF UNITED STATES ELECTRICAL PATENTS.

From June 21st to July 12th, 1887 (inclusive).

Alarms and Signals:—*Temperature-Alarm System*, A. E. Morrison, 365,069, June 21. *Signal Box*, F. W. Cole, 365,365. *Thermostat*, H. E. Jacobs, 365,438. *Electric-Alarm Clock*, M. Stecher, 365,493, June 28. *Electro-Magnetic Annunciator-Drop*, J. J. O'Connell, 365,935. *Signal-Box*, H. A. Chase, 366,154. *Police Telephone System*, W. H. Eckert and J. A. Seely, 365,911. *Thermotic Circuit-Closer*, J. C. Mackey, 366,176, July 5. *Electrical Alarm*, J. A. Galvin, 366,212, July 12.

Clocks:—*Electric Controlling and Regulating Device for Pendulums*, W. S. Scales, 366,513, July 12.

Conductors, Insulators, Supports and Systems:—*Composition of Matter for Insulating Material*, J. B. Williams, Re-issue 10,846, June 21. *Junction-Box for Electric Conductors*, J. Kreusi, 366,173. *Electrical Conductor*, same, 366,174, July 5. *Underground Way or Conduit*, S. W. Arnold and W. C. Cranmer, 366,195. *Underground Cable for Telegraph Wires*, R. F. Silliman, 366,263. *Conductor Support*, W. P. Zimmerman, 366,289. *Compound for Covering Electric Wires*, H. W. Merritt, 366,336. *Semi-Elastic Compound for Covering Electric Wires*, same, 366,337. *Electric Conductor*, G. Westinghouse, Jr., 366,361. *Laying Continuous Electrical Conduits*, A. C. Chenoweth, 366,457, July 12.

Distribution:—*System of Electrical Distribution*, T. A. Edison, 365,978; J. F. McElroy, 366,124, July 5. *System or Circuit for Electrical Distribution*, H. M. Byllesby and O. B. Shallenberger, 366,376. *Automatic Regulator for Electrical Distribution*, W. Stanley, Jr., 366,523, July 12. *Apparatus for Transforming Electric Currents*, L. Bollmann, 365,116, June 21. *Electrical Convertor*, A. Schmid, 366,347; G. Westinghouse, Jr., 366,362 and 366,544, H. M. Byllesby, 366,375. *Circuit Controller for Electric Circuits*, H. M. Byllesby and P. Lange, 366,374, July 12.

Dynamos and Motors:—*Electro-Magnetic Motor*, H. M. Paine, 366,021, July 5. *Automatic Regulator for Electric Motors*, W. Stanley, Jr., 366,267. *Regulator for Self-Exciting Alternate-Current Electric Generators*, O. B. Shallenberger, 366,349, July 12.

Galvanic Batteries:—*Electric Battery*, P. Germain, 365,359, June 21. *Galvanic Battery*, C. Seiler, 366,034, July 5.

Lamps and Appurtenances:—*Electric Arc Lamp*, E. Thomson, 365,553, June 28; A. G. Waterhouse, 366,613 and 366,614, July 12. *Incandescent Electric Lamp*, J. Smith, 365,351, June 21; P. O. Jenkins, 365,384; E. P. Thompson, 365,495, C. G. Anderson, 365,499, June 28. E. P. Thompson, 366,352, July 12. *Incandescent Lamp-Socket and Cut-Out*, M. J. Wightman and H. Lemp, 365,159 and 365,189, June 21. *Hanger for Electric Lamps*, F. Thompson, 365,414. *Electric Lighting of Railway Cars*, C. E. Buell, 365,460. *Globe for Electric Lamps*, G. L. Abbott, 365,498. *Filament for Incandescent Electric Lamps*, T. A. Edison, 365,509, June 28. *Process of Making Incandescents*, E. P. Thompson, 366,353. *Mast-Arm for Electric Lights*, F. H. Parker, 366,603. *Key-Socket for Incandescent Electric Lights*, F. L. Pope, H. M. Byllesby and P. Lange, 366,606, July 12

Measurement:—*Galvanometer*, H. B. Cox, 366,305; P. Lange, 366,409; P. Lange and O. B. Shallenberger, 366,410. *Electric Meter*, W. Stanley, Jr., 366,268, July 12. *Apparatus for Measuring Electricity*, J. Caudery, 365,702, July 5, and 366,202, July 12.

Medical and Surgical:—*Electric Belt*, R. E. Williams and T. G. Hammer, 366,058. *Electrolytic Vaporizer for Medical Purposes*, M. M. Gillam, 366,164, July 5.

Miscellaneous:—*Electric Valve Mechanism for Water-Mains*, G. B. Bassett, 365,040. *Printing Shell*, O. J. Smith, 365,352. *Coin-Operated Electrical Weighing Scale*, W. R. Smith and A. L. Washburn, 365,353, June 21. *Valve Gear*, T. A. Edison, 365,465. *Electrical Contact-Changer*, D. Davis, Jr., 365,585. *Electric Temperature-Controlling Device*, H. E. Jacobs, 365,600. *Fire-Extinguisher*, C. H. Shaffor, 365,639. *Electric Circuit-Testing Apparatus*, G. F. Bulen, 365,726, July 28. *Electric Block System for Pneumatic Dispatch*, A. Bryson, Jr., 365,787. *Electrical Cartridge*, E. A. Monfort, 365,842. *Electrical Breech-Loading Fire-Arm*, same, 365,843. *High Temperature Thermometer*, W. F. Brewster, 365,905. *Electric Rock Drill*, L. J. Phelps, 366,184, July 5. *Automatic Electric Temperature Regulator*, W. S. Johnson, 366,324. *Safety Strip for Electric Circuits*, O. B. Shallenberger, 366,350. *Electric Switch*, P. Lange, 366,407. *Core for Electro-Magnets and Method of forming the same*, same, 366,408. *Shaking Apparatus*, C. Collins, 366,460. *Electric Switch*, R. McRae and C. F. Tavener, 366,634, July 12.

Railways and Appliances:—*Guide Truck for Electric Railways*, B. F. Hamilton, 365,339. *Swivel Truck for Electric Railways*, same, 365,340. *Tramway for Elevated Electric Railways, with Means for Insulating the Rails*, same, 365,341. *Electric Railroad-Signal*, M. W. Long, 365,345, June 21. *Electrical Conductor for Railway Trains*, A. L. Duwelius, 366,209. *Car-Lighting Apparatus*, C. R. Arnold, 366,292, July 12.

Telegraphs:—*Printing-Telegraph*, S. V. Essick, 365,059, June 21; G. B. Scott, 365,705, June 28; C. L. Healy, 365,994, July 5; J. P. Hurley and G. F. Perkins, 366,319, July 12. *Transmitter for Printing Telegraphs*, S. D. Field, 365,982; C. L. Healy, 366,166. *Printing Telegraph Receiver*, H. Manken and C. L. Healy, 366,178, July 5. *Type-Wheel for Printing-Telegraph Receivers*, C. L. Healy, 366,628, July 12. *Automatic Telegraphy*, C. Selden, 365,103, June 21. *Polarized Relay*, G. T. Woods, 366,192, July 5. *Telegraphy*, L. Maiche, 366,229. *Telegraph Key*, A. S. Keating, 366,400, July 12.

Telephones, Systems and Apparatus:—*Telephone Transmitter*, J. W. Bonta, 365,776, 365,777, 365,778, 365,779, 365,780 and 365,781, July 5. *Mechanical Telephone*, J. Lauhoff, 365,525, June 28. *Angle-Hanger for Mechanical Telephone Lines*, A. W. S. Davis, 365,708. *Mechanical Telephone Switch*, G. F. Shaver, 365,868. *Electric Telephony*, A. G. Safford, 366,190, July 5.

The India-Rubber and Gutta-Percha Insulating Co.

MANUFACTURERS OF

ALL KINDS OF INSULATED WIRES AND CABLES.

Guaranteed to give satisfactory service under ground and over head. Specially adapted for CHEMICAL WORKS, PAPER MILLS, DYE WORKS, COAL MINES, Etc., Etc. Prices and Samples on application.

W. M. HABIRSHAW, General Manager.

No. 159 FRONT STREET. NEW YORK CITY.

H. M. RAYNOR,
25 Bond Street,
New York.
Established 1859.

PLATINUM FOR ALL PURPOSES

Wholesale and Retail.

Carbon Plates FOR **Electrical Purposes.**

NEW YORK CARBON WORKS,
HENRY MÜLLER, Jr., Prop., 39 Dey Street, New York.

Digitized by Google

THE ELECTRICIAN
AND
ELECTRICAL ENGINEER.

Conducted by F. L. POPE. G. M. PHELPS, JR., Associate Editor.

PUBLISHED MONTHLY BY

THE ELECTRICAL PUBLISHING CO.,

115 Nassau Street, New York city.

European Agent, F. H. WEBB, 4, The Sanctuary, Westminster, London, S.W., Eng.

TERMS OF SUBSCRIPTION.

United States and Canada, - - -	per annum,	$3.00
Four or more Copies, in Clubs (each) - - - -	"	2.50
One Copy, Four Months, - - - - - -		1.00
Great Britain and other Foreign Countries within the Postal Union	"	4.00
Single Copies, - - - - - - - - - -		.25

[*Entered at the Post Office at New York, N. Y., as second class mail matter.*]

EDITORIAL ANNOUNCEMENTS.

Addresses.—*Business letters should be addressed and drafts, checks and post-office orders made payable to the order of the* ELECTRICAL PUBLISHING CO. *Communications for the attention of the editors should be addressed,* EDITOR OF THE ELECTRICIAN AND ELECTRICAL ENGINEER, *115 Nassau Street, New York city.*

Communications *suitable for our columns will be welcomed from any quarter. Discussions of subjects relating to all branches of electro-technical work, by persons practically acquainted with them, are especially desired. Unavailable and rejected manuscripts will be returned only when accompanied by the necessary postage.*

Advertisements.—*We can entertain no proposition to publish anything for pay, or in consideration of advertising patronage, except in our advertising columns. Our editorial columns will express our own opinions only, and we shall present in other columns only such matter as we consider of interest or value to our readers*

NEW YORK, SEPTEMBER, 1887.

THE SEMI-CENTENNIAL OF INDUSTRIAL ELECTRICITY.

IN a learned work on the subject of atmospheric electricity put forth some years since by one Major Parnell, of the Royal Engineers of Great Britain (apparently a gentleman of Celtic extraction), it is maintained that "the lightning rod was the earliest instance of the useful application of electricity." Notwithstanding this dictum, we, in common, we are persuaded, with the majority of our readers, are still inclined to regard the electric telegraph as the one discovery which above all others, is entitled to that particular distinction.

While our transatlantic cousins have been celebrating, in their customary generous and hospitable manner, the jubilee of the electric telegraph in England, we on this side have apparently overlooked the fact that the present year of grace, 1887, is also the proper semi-centennial anniversary of the electric telegraph in America.

It is fifty years ago this present month, since Morse, having completed the rude working model of his conception of the recording electro-magnetic telegraph, exhibited its working in the presence of a number of scientific friends at his rooms in the University Building in Washington square. Here it was first seen by Alfred Vail, who in a manuscript found among his papers after his decease, now printed for the first time, has graphically recorded his first impressions of the electro-magnetic telegraph, and has accompanied it with a most interesting narrative of the early history of its practical development. It was on September 2, 1837, that this memorable interview occurred, and on the 22nd of the same month, a contract was executed by which Vail, in consideration of a share in the patent rights, agreed to construct a practical form of apparatus, and to supply the necessary means for exploiting the invention. By November 13th, the original instruments had been so improved as to be capable of working through 10 miles of wire, and on January 6, 1838, the new instruments having been completed, the first public exhibition to invited guests was given at the Speedwell Works in Morristown, N. J.

The apparatus was soon after exhibited to large audiences in New York, Philadelphia, and Washington, eliciting the unqualified admiration of every one who had the mental capacity to appreciate the inevitable revolution which the invention was destined to create in the business methods of the world.

But a long and weary season of discouragement was yet to follow. Year after year passed away, while government and private capitalists, in spite of every appeal, alike remained incredulous of the value and the importance of that which was perhaps the most extraordinary, if not the most useful, discovery of the nineteenth century; a fact, however, which is in part accounted for by the widespread and continuous financial exhaustion which followed the disastrous panic of 1837. But darkness is always followed by the dawn, and at length, in 1844, Congress voted the historical appropriation which placed the struggling infant upon its feet. From this time forward, for a quarter of a century, telegraphy stood almost alone as the exponent of applied electricity. Other applications, however, gradually followed; and in the last decade its field broadened year by year. Now, upon the fiftieth anniversary of the first exhibition of the telegraph in the University of New York, it would be difficult to name a single branch of science, art, or industry which does not owe at least something to the potent aid of electricity. Truly the electrical record of the past half century has surpassed the wildest flights even of such vivid imaginations as those which gave us the wondrous tales of the Arabian Nights.

THE PROGRESS OF ELECTRIC LIGHTING.

TEN months ago, in an article on the progress of domestic electric lighting, speaking of the inductive system of electrical distribution, then recently patented in the United States, we ventured the prediction that if this method proved practically successful, the problem of economical distribution over any area required in electric lighting, had received its final solution. While the article referred to was written in view of a knowledge of the results which had been obtained in the running of an experimental plant for over a year, yet we should scarcely have felt ourselves justified in looking forward to the making, within so short a time, of such a remarkable exhibit as that of the Westinghouse company, with its accompanying facts and figures, which we publish in another part of the present issue.

If any further evidence were needed that we have entered upon a new era in domestic illumination, the fact that other prominent electric lighting interests have apparently determined to adopt substantially the same sys-

Digitized by Google

tem as that of the Westinghouse company would be sufficient to establish the truth of the assertion. Of these, the Sun company and the Thomson-Houston company are the only ones who have as yet made actual installations; but the United States company have given notice that it also is about to enter the field, and it is fair to presume that the Edison company will, in due time, be heard from to the same effect.

As noticed in our news columns some months since, suit has been instituted against the Sun company by the Westinghouse company, alleging infringement by the latter of the Gaulard-Gibbs patent. It is said that the United States company will adopt substantially the same ground of defense against the Gaulard-Gibbs patent as that already taken by the Sun company, which, in substance, is, that the whole system was well known, and was public property, before the date of the invention of the patentees. If this be a fact, it is only fair to say that the further fact that no one seems to have thought it worth while to take up the system commercially until a comparatively recent period becomes somewhat difficult of explanation. One thing is certain, that with the well-known ability of the counsel engaged both against and in behalf of the patent, the question of the novelty of the invention can scarcely fail to be pretty thoroughly sifted, whatever may be the final result.

THE NATIONAL ELECTRIC LIGHT ASSOCIATION.

Each semi-annual meeting of the National Electric Light Association develops greater interest and usefulness than its predecessor. The convention at Boston, August 9th–11th, excelled all previous meetings in point of numbers, and was inferior to none in the quality of papers read and of the ensuing discussions.

The entire proceedings, including the papers read and the discussions, are given in our columns for this month. All the topics treated were of immediate interest and significance.

The progress of alternate current distribution since the last semi-annual meeting was well set forth by Mr. M. M. M. Slattery, followed in discussion by Dr. Moses, Mr. Smith, Mr. Duncan and others; from whose united testimony it is quite clear that sufficient experience has accumulated to dissipate the somewhat tentative, not to say timorous, feeling towards the system that prevailed in the last convention.

Mr. Garratt, as chairman of the wire gauge committee, presented as a report a very comprehensive table of the mathematical properties of wires, based on a scale of diameters increasing by tenths of a millimeter from one to one hundred millimeters. The publishing of this table by the association as useful information for all who are accustomed to designate wires by diameters, and as an aid in extending the use of metric in place of inch fractions, rather than as a new wire gauge, seems a judicious proceeding. Mr. Garratt and his co-adjutors on the committee performed a huge task, at much sacrifice of time and personal convenience, in computing the tables, and well deserve the hearty thanks of the association.

Mr. Weeks's paper on "Electrical Education," was timely and to the point. We were pleased to learn, during the convention, from the superintendent of one of the large electric motor companies, that systematic instruction of employés in electrical science had been commenced in the works under his supervision, somewhat in a line suggested by the lectures of Dr. John Fleming, to electrical artizans, provided by the Messrs. Crompton, of England, for their workmen a year or so ago.

Mr. Arthur Steuart, in his report for the legal committee, not only *discussed* patent office reform, but presented his views in the tangible shape of a bill for presentation at the next session of Congress. It is to be hoped that the members of the association will do all in their power in furtherance of the plans outlined by Mr. Steuart.

Lieut. Murdock's paper on electric light requirements for the new cruisers, offered much valuable suggestion to makers of dynamos; particulary on the point of low speed dynamos for direct connection to engines.

Storage batteries received much attention at the hands of the convention, the subject being presented in suggestive papers by Messrs. C. O. Mailloux and A. Reckenzaun, the former treating of the applications of electrical storage in general, and the latter chiefly of its application to electric locomotion.

There was no paper on electric motors. The ample exhibition of many motors in operation upon electric light circuits, made by several enterprising manufacturers, in connection with the meeting of the association, constituted an object lesson quite as useful as papers and discussion would have been.

SOME PROPHETIC ELECTRIC LIGHT FIGURES.

Now that modern improvements in the methods of distributing electricity for incandescent lighting have rendered it practicable to establish and maintain central station plants at a profit, even in towns of not more than 4,000 inhabitants, it has become possible to ascertain with some approach to accuracy the dimensions of the field which is open to be occupied by this incomparable illuminant.

Experience shows that when house-to-house lighting has been thoroughly worked up in any town, the capacity of the central station plant will need to be equal to an average of about one 16 c.p. lamp for each inhabitant.

According to the census of 1880, of the 50,000,000 inhabitants of the United States, 13,000,000, or 26 per cent., resided in 580 towns and cities having a population in excess of 4,000 each.

At the normal rate of increase, we shall have, in five years from the present writing, a population of nearly 70,000,000, of whom some 18,000,000 will be gathered within the limits of towns of 4,000 inhabitants and upwards. Each of these individuals will represent one incandescent lamp, and the necessary power for operating the same. Even after deducting the lamps which have already been installed, there will be required a total output of more than 11,000 lamps and over 1,000 h.p. each of steam-engines, boilers and dynamos, every working day for the next five years, to supply the demand which from all present appearances will inevitably arise. This is entirely aside from the additional number of lamps which will be required for renewals—itself an enormous item. The change from gas to electricity which is now going on in connection with domestic lighting, will be not a little accelerated by the action of the gas companies, who are everywhere evincing an increasing disposition to take up electric lighting themselves; and a very sagacious policy it is too, in view of the present outlook for gas illumination.

THE ELECTRICAL EXHIBITION OF THE AMERICAN INSTITUTE.

The Electrical Exhibition to be opened September 28th by the American Institute and the New York Electrical

Digitized by Google

Society, will, undoubtedly, offer a very comprehensive display. Over 18,000 square feet of space have been already allotted by the committee.

Electric lighting will be represented by extensive exhibits by prominent companies. In this department a dynamo of 100 arc light capacity is engaged to be shown. A variety of incandescent light systems will be on exhibition, including a display of low-resistance lamps in series.

Electric motors will form a leading feature of the exhibition, nearly all the principal companies engaged in their manufacture having applied for space. One electric motor company expects to undertake not only an exhibit of their machines, but their manufacture in the exhibition building. Electric locomotion will be exemplified by a model street railway and by an elevator, both in operation. Mr. Edison will exhibit his pyro-magnetic motor.

The electric-welding process of Prof. Elihu Thomson will be shown.

An ocean cable recorder in operation will be a very interesting feature to the general public.

A great variety of minor applications of electricity will be on exhibition. The working exhibits, together with the historical collection of apparatus which the New York Electrical Society is preparing, will constitute a very instructive display of the history and progress of electrical industry in America.

In coming down-town on the Sixth Avenue line of the Manhattan Railway, a few days since, we noticed near Chambers street a number of mechanics suspended in the air in various uncomfortable and more or less dangerous positions, engaged in slowly and laboriously boring with hand-drills a large number of rivet-holes in the transverse girders, in view of some contemplated enlargement or strengthening of the existing structure. If a single man were provided with a drill run by an electric motor, receiving its current either from the electric light wires or from a portable steam engine and dynamo, which might stand anywhere in the vicinity, he could do the work in a tenth of the time, and at a hundredth of the expense of the primitive method actually employed. The number of labor and time-saving applications of the electric motor which suggest themselves to the well-informed practical electrician, whenever he takes his walks abroad, are literally without number. The above is but one instance of a thousand that might be suggested. As another fruitful field, take, for example, the distribution of power in large manufactories by the ordinary appliances of gearing, shafting and belting. We have been told by large manufacturers that instances are not infrequent in which 50 or 60 per cent. of the total coal-bill is properly chargeable to the friction of the power-distributing appliances. The wear and tear of belting and gearing is in itself no inconsiderable item. All this work will in time be done by electric motors, with much less expense and with an incomparably greater degree of convenience, efficiency, and safety. We saw a machine shop belonging to a wealthy amateur in England, a year or two since, which was fitted up in this way, each lather, planer, or other tool having its independent motor, which was really a model in its way; and there should be no obstacle to the general application of similar methods in all branches of manufacture. One great advantage is that the connections consume no power, except when the machines are in service—a most important consideration.

Now that currents of high potential are coming into increasing use for incandescent lighting and street-railway service, as well as for arc lighting, more attention should be paid to the character of the insulating supports used. Glass insulators and wooden pins are a miserable makeshift, and ought to be no longer tolerated. When coated with the carbonaceous deposits of a city atmosphere, and subjected to the effects of a driving rain, their non-conducting properties are pretty nearly *nil*. Heavy double-bell porcelain insulators, such as are used in France and Germany, mounted on substantial malleable iron brackets, would serve the purpose admirably, while a well-designed paraffine insulator would be still better. This warning ought to be heeded, but we fear it will not be,—at present.

A street railway electric conductor fell from its supports a few weeks since, in Montgomery, Ala., and killed a horse. It might have been a man, and a colonel, or even a brigadier-general, at that. This will doubtless be used for all it is worth as an argument against electric street railways, whereas, in fact, it is only an argument against cheap construction and earth circuits for high potential currents. If a double conductor is used, and the whole circuit kept under constant test, as it easily might be, the falling of a conductor could not possibly harm anybody. Our electrical engineers are enterprising, but they are much too prone to take risks,—or rather to subject other people to them. Accidents like these, which can perfectly well be avoided, do great harm in inciting the prejudices of the average citizen against electrical systems and appliances. Let us have a reform.

The misguided combination of electric light carbon manufacturers came to a speedy collapse. Captain Scott's coon was hardly quicker in coming down than were the carbon men when they descried the improvised gun of the carbon consumers aimed in their direction. Every one having now enjoyed his laugh over the affair, congratulations are in order on both sides. With or without the counter-combination of consumers, the attempt to monopolize the production of carbons was hardly less absurd than a like undertaking in brick-making, or say the manufacture of clothes-pins or slate-pencils. A survey of the constantly-increasing competition in the far more difficult manufacture of dynamos and electric lamps should have sufficed to indicate the hopelessness of the carbon-makers' project. Let their superfluous energy find employment in improving the quality of their wares and, if possible, reducing the cost of their manufacture.

A fuel-gas plant, having a capacity capable of producing one million cubic feet of gas per diem, from coal, is now being erected in Pittsburgh, for the purpose of exhibiting the new patented processes and appliances of the Fuel Gas and Electric Engineering Co. of that city. It is confidently expected that the operation of this plant will conclusively demonstrate the practicability of wholly displacing, by cheap fuel gas, the use of coal for manufacturing, domestic and metallurgical purposes. The ingenious contrivances for controlling and regulating gas, at high pressures, which are in use in the natural gas service in Pittsburgh, will be employed by the new company, so that the present illuminating gas plants, when displaced, as they soon must be, by the electric light, may be utilized, without reconstruction, for a low pressure domestic fuel gas service.

Mr. Edison's description of his pyro-magnetic generator, read before the American Association for the Advancement of Science during its meeting at New York, in August, has attracted much attention in electrical and other scientific circles. An abstract of the paper is printed in another column of our present issue. We re-print also, from the *Journal of the Franklin Institute*, for January, 1879, the description, with illustration, by Profs. Edwin J. Houston and Elihu Thomson, of a thermo-magnetic motor, devised by them while investigating the changes in the coercitive force of iron and steel caused by changes of temperature.

Digitized by Google

ARTICLES.

THE WESTINGHOUSE ALTERNATING SYSTEM OF ELECTRIC LIGHTING.

BY F. L. POPE.

It is not yet two years since the first plant for electric lighting from a central station, making use of a system of distribution in which alternate currents of high potential are converted by induction into consumption currents of low potential, was established in the United States by William Stanley, Jr., now electrician of the Westinghouse Electric Co. of Pittsburg, Pennsylvania. A comparatively short experience with this plant was sufficient to demonstrate its many advantages over direct current systems with lamps arranged either in multiple arc or multiple series—or as Prof. Forbes prefers to say, parallel or parallel series—having either two or three mains or distributing wires, which had, up to that time

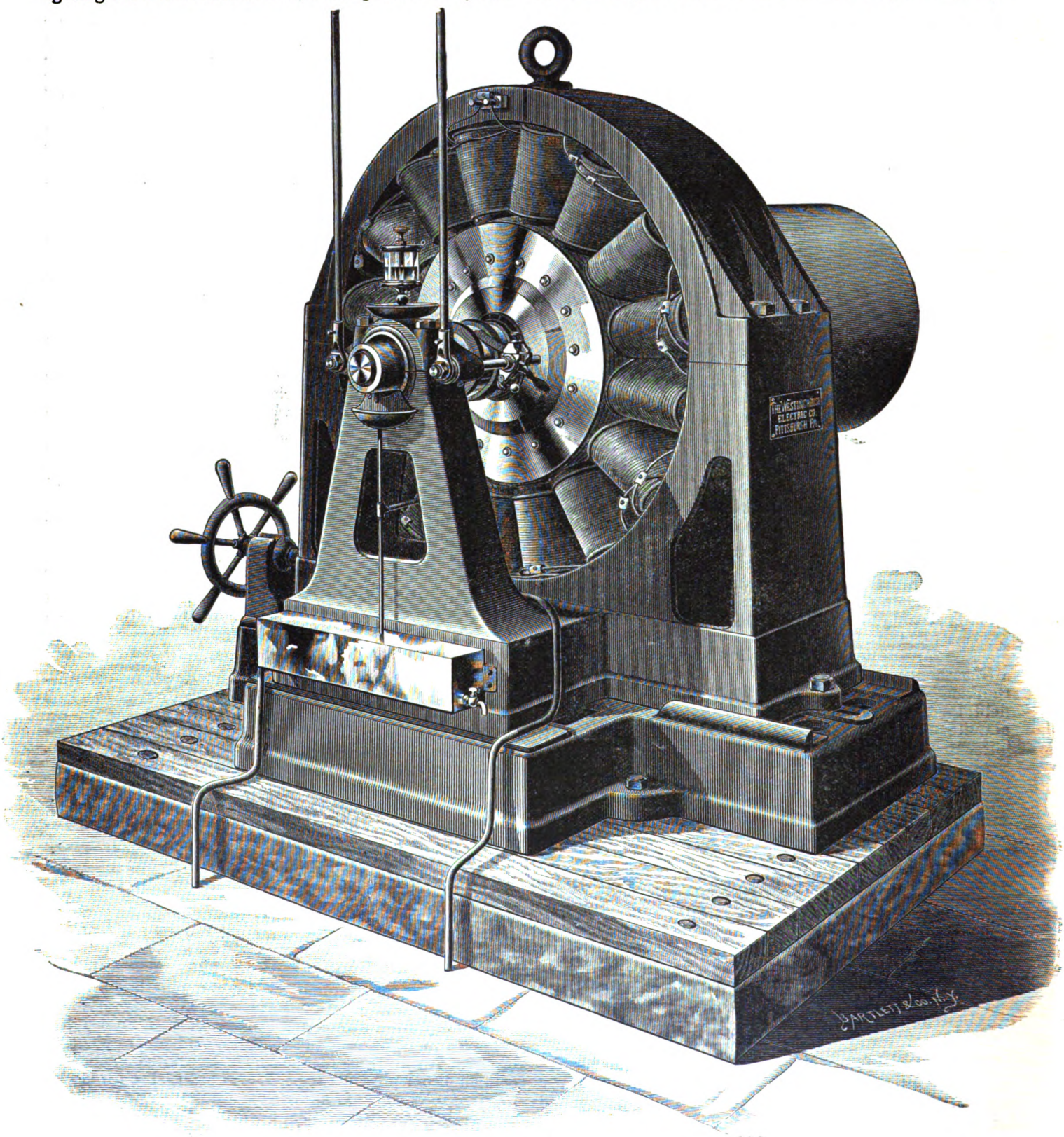

FIG. 1.

Digitized by Google

been in universal use in this country for incandescent lighting.

Not only does the alternating system in its present form dispense with the complicated apparatus of feeders, regulators, and the like, pertaining to the old systems, and with the accompanying multiplicity of wires at the central station, but it admits of a more simple and effective construction of the dynamo-electric machine, and what is of more importance, the plant as a whole may be installed at a vast saving in first cost, which is due principally to the comparatively small amount of copper required for the main conductors. The operating expenses are also materially reduced, as the conversion system has been found by experience to be capable of giving more light per horse-power, or per pound of coal consumed, than the direct system.

It is in lighting from central stations that the advantages of the alternating system are most strikingly manifested, and it is accordingly not a matter of surprise that the growth of the business of the Westinghouse company in this particular field during the past year has been quite unprecedented, the number of stations completed and in operation at the present moment being no less than 27, equipped with more than 75,000 c. p. of incandescent lamps.

The alternating system of the Westinghouse company is based upon the well-known secondary generator system of Messrs. Gaulard and Gibbs, which was first commercially introduced in London in 1883.[1] Although the fundamental principles of the Gaulard-Gibbs system have been retained in the Westinghouse apparatus, the manner in which these principles are applied has been considerably modified, while most of the details have undergone a radical and complete transformation at the hands of many skilfull and intelligent inventors, engineers, electricians and mechanics, the results of whose researches and labors have been utilized by the Westinghouse company. Especially important in this connection has been the work of William Stanley, Jr., one of the most talented of the younger electricians of the country, who has been connected with the company from the time of its first organization, and whose labors in developing and perfecting the present highly efficient methods and apparatus are deserving of special recognition.

While the ordinary system of direct distribution with lamps arranged in parallel is undoubtedly the most suitable for small isolated installations, both theory and practice have shown that except in very special cases, any considerable extension of the territorial area to be lighted necessarily entails an extravagant expense, either in installation or in subsequent operation, or both. If too small a main conductor is used with a view to economy in the cost of copper, the amount of energy wasted in heating the conductors becomes enormous; if, on the other hand, too large a conductor is employed, then capital is uselessly buried. A certain size should be selected with a view to offsetting one of these sources of loss against the other, in such a manner as to arrive at the maximum economy which circumstances permit.[2] The ingenious three-wire system of Hopkinson and Edison was regarded at the time of its introduction as an important improvement, as it effected a considerable saving in the quantity of copper required in any particular case, and thus correspondingly extended the area of profitable station lighting. The question as to the actual extent of this saving gave rise at one time to much discussion, but Professor Forbes has shown, by computations apparently conclusive, that assuming a two-wire system laid down under the conditions of the utmost possible economy in accordance with the law of Sir William Thomson, the maximum saving capable of being effected by the use of a third wire is 25 per cent.[3] In cases where the most distant lamp of the district to be illuminated is not more than 600 or 800 feet from the central station, the parallel or three-wire system is admirably adapted, but as soon as this distance is exceeded the cost of installation begins to mount up at a most alarming rate. A central station cannot be worked to the greatest advantage unless the engineer and firemen are fully employed, and hence it results that the maximum economy in steam plant, taking into account the cost of attendance, can hardly be reached with less than 1,000 h. p. It is clear, therefore, that the direct system can only be economically and advantageously applied in central station lighting in localities so densely populated as to require say 10,000 16 c. p. lamps within a radius of 800 feet; but in any such district space is usually very valuable, and the cost of the real estate required for the station becomes an important, if not a determining factor in the cost of the installation.

The controlling feature in all systems of direct distribution in which the lamps are individually regulable, is the resistance of the lamp filament. This is a necessary consequence of the law which governs the production of heat in a circuit traversed by an electric current, first enunciated by Joule, namely, that the heat developed by a current in any section of an electric circuit is in proportion to the resistance of that section.[4] In every system of electric lighting the problem is simply to develop the greatest possible amount of heat in the lamp filaments, and the least possible in the remaining portions of the circuit. Hence it is necessary to augment the resistance of the filament to the utmost practicable extent, which is effected by making the carbon of as small a cross-section and as great a length as is compatible with sufficient mechanical stability. It has not been found possible to increase the filament resistance of the ordinary 16 candle incandescent lamp, when alight, much beyond 200 ohms, without rendering it too fragile and delicate for ordinary use. Being thus limited in this direction, the only course remaining is to reduce the resistance of the remainder of the circuit to the lowest possible point; and in doing this, as already pointed out, it only remains to make the best available compromise between two antagonistic sources of expense, one represented by interest and depreciation calculated upon the first cost of the plant, and the other based upon the cost of power in each particular case, which will vary according as steam or water-power is used, and with the cost of coal. Thus the possible economy of the direct system is, in the present state of knowledge, strictly limited in every direction by natural laws, and can only be increased by increasing the resistance of the lamp filaments, a desideratum thus far sought for in vain. Moreover, should a means be hereafter discovered of increasing the efficiency of the lamp in this particular, its advantages would not be confined to the direct system of distribution but would be equally shared by the alternating system.

It has long been recognized that the commercial solution of the problem of electrical distribution from central stations must be sought for in the direction of a system of conversion by which the general distribution might be effected at a high potential permitting the use of small conductors, and the local distribution by currents of low potential adapted to supply incandescent lamps of ordinary resistance. Under these conditions the central station may be located at any convenient point where land is cheap, and where power can be economically obtained, without reference to its distance from the centre of consumption, and the station may be of any size, so that all the works may be concentrated in one place as they are

1. *Engineering*, March 2, 1883, xxxv, 205; ibid. Nov. 23, 1883, xxxiv, 480.

2. Vide Thomson's law, Martin & Wetzler's *Electric Motor and its Application*, p. 46.

3. Forbes, *Cantor Lectures*, ELECTRICIAN AND ELECTRICAL ENGINEER, iv. 254. See also Prof. Carhart's discussion of same subject, *Science*, iv, 477, and ELECTRICIAN AND ELECTRICAL ENGINEER, iv, 103.

4. Joule, *Phil. Mag.*, 1884, xix, 263; Tyndall, *Notes on Electricity*, § 271, 272, 273.

Digitized by Google

in gas distribution. Apparently all these conditions are successfully met by the alternating system, a circumstance due for the most part to its great flexibility. However great may be the area over which the system is extended, each lamp may be lighted, extinguished or regulated, without interfering with others, while the consumption of fuel remains proportional to the number of lamps alight, whether few or many.

The essential features of the Gaulard and Gibbs system are, first, a dynamo-electric generator producing alternating positive and negative currents of high potential, which are sent through a main circuit extending to the

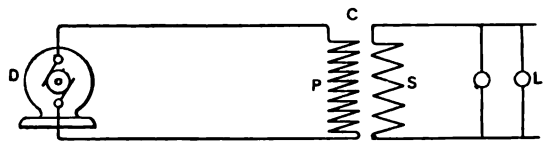

FIG. 2.

point of distribution; second, a reversed induction coil, that is to say, one having a greater number of convolutions given to its primary than to its secondary conductor, and third, electric lamps included in the closed secondary circuit of the induction coil. The general organization will be understood by reference to figure 2, in which D represents an alternate-current dynamo, C an induction-coil having a greater number of convolutions in its primary than in its secondary wire, and L an electric lamp. The extent to which the potential is reduced in transferring a given amount of energy from the primary to the secondary circuit depends mainly upon the ratio of the number of convolutions of the primary to those of the secondary. Thus, for example, if it were required to reduce the potential from 200 to 100 volts, it would be necessary to so construct the induction coil that the number of convolutions in the primary would be twice as great as the number in the secondary, and so for any other ratio of reduction. Such an induction coil has been termed by Gaulard and Gibbs a secondary geneaator. In the Westinghouse system it is more usually termed a converter.

The potential ordinarily employed in the main circuits of the Westinghouse installations is about 1,000 volts, and that in the lamp circuits 50 volts, the ratio of conversion being, therefore, as 20 to 1. The action of the apparatus will be readily understood in view of the foregoing explanation. The dynamo-electric machine D sends out rapid alternations of positive and negative polarity of high potential, and these induce other alternations of current of corresponding rapidity of succession, but of lower potential and increased quantity, in the secondary circuit

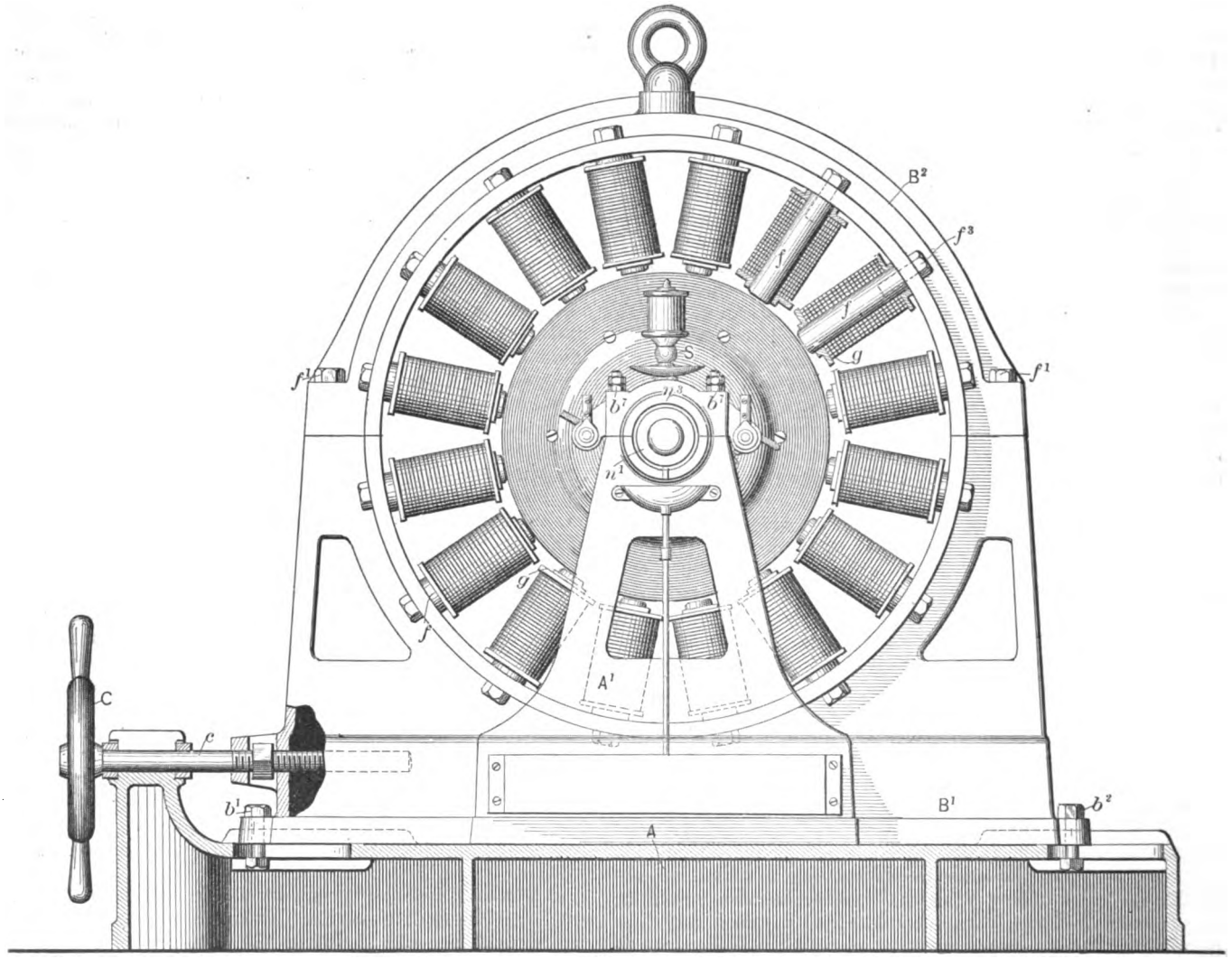

Fig. 3

of each converter. The rapidly alternating current has precisely the same heating and illuminating effect upon the filament of a lamp as the direct and continuous current, although experience has shown that the life of the lamps is considerably greater with the alternate than with the direct current.

The dynamo constructed by the Westinghouse Electric Co. for use with this system, was especially designed for this service by Mr. Stanley, and is of the separately excited type. It is at present manufactured in three sizes; No. 1 having a rated capacity of 650 16 c. p. incandescent lights, and Nos. 2 and 3 having a rated capacity respec-

Digitized by Google

tively of 1,300 lights and 2,500 lights. The engraving, figure 1, is an excellent representation of the external appearance of the No. 1 dynamo. The details of the construction of the machine will be best understood by reference to the sectional drawings, figures 3, 4 and 5. The foundation of the machine is a heavy cast-iron bed-plate A, having lateral projections upon which the standards A^1 and A^2 of the armature shaft K, are supported. These standards are an integral portion of a single casting B^1, which rests upon the bed-plate and is held in position by bolts b^1 b^2, passing through slotted holes, by the aid of which the lateral position of the entire machine may be adjusted by the hand wheel C and adjusting screw *c*, an adjustment which is necessary when several machines are belted to a single driving-shaft. The cores, *f*, *f*, of the 16 inwardly projecting field-magnets surrounding the armature are fixed to a circular yoke, the lower half of which is formed by the casting B^1, while the upper half constitutes a separate piece, B^2, the two parts being bolted together at f^1 f^1. The field-magnet coils are each wound separately, and afterward slipped over the pole-pieces, and secured in position by screws *g*.

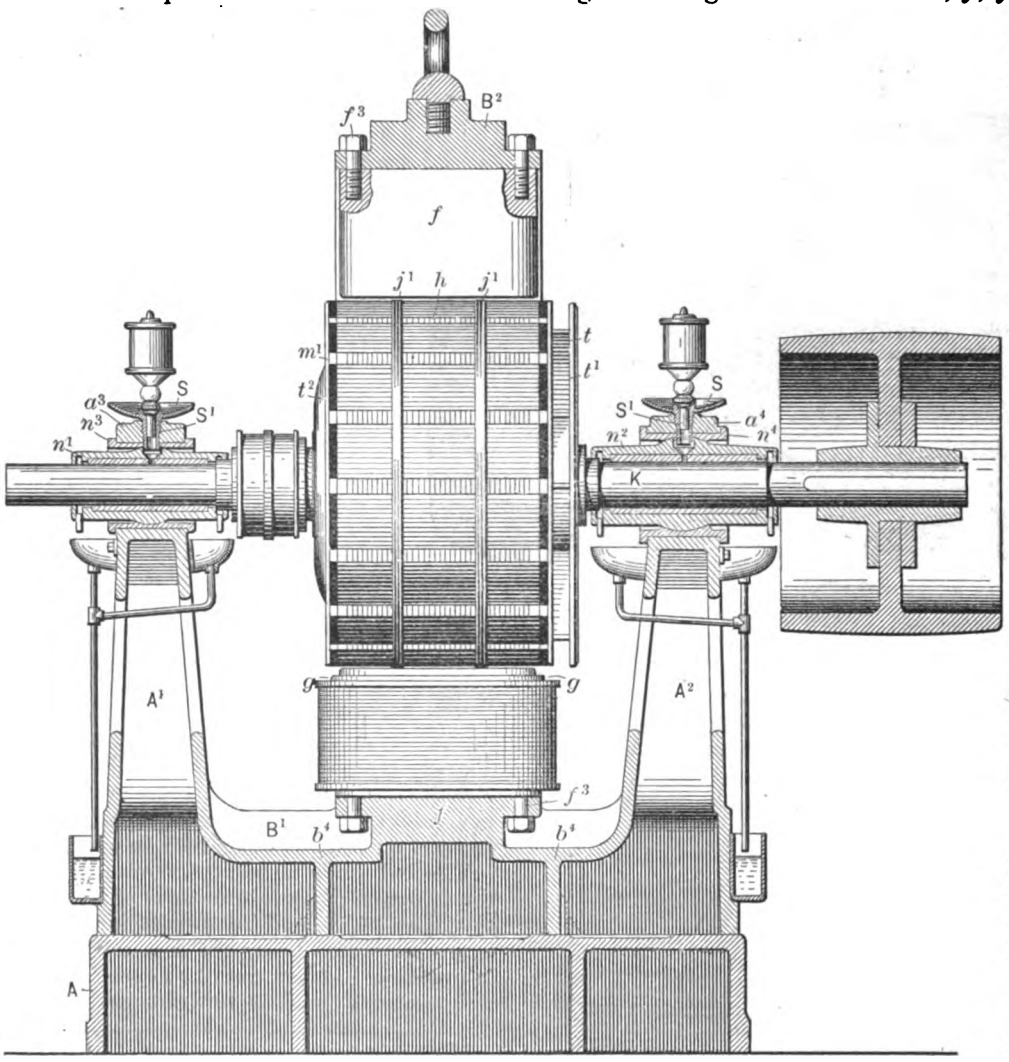

Fig. 4

The armature is cylindrical in form, and is made up of a great number of discs of thin rolled iron placed side by side and insulated from each other by paper. Each plate is stamped out with holes as indicated at *i* *i*, which serve to cool the armature when running as well as to diminish its weight. In putting the armature together, the holes in the several plates are made to register, so that they form openings ex-

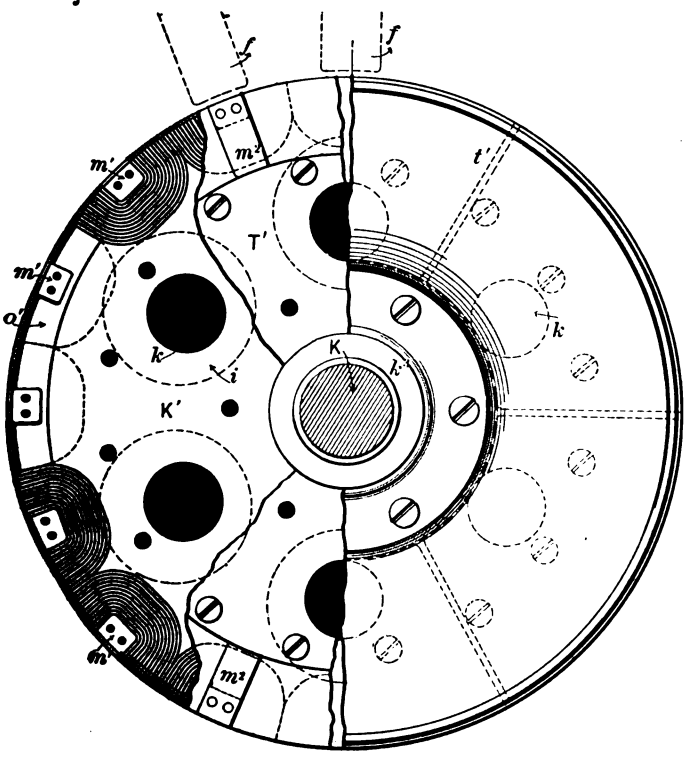

Fig. 5

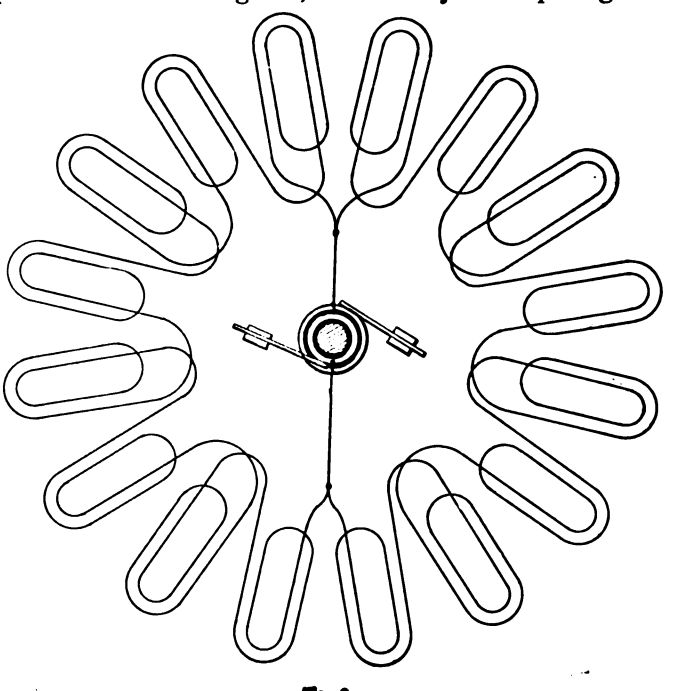

Fig. 6

Digitized by Google

tending through the entire length of the cylinder. The discs are clamped together by thick end-plates or heads, κ^1, κ^1, perforated with ventilating holes, k k, and provided with reinforcing plates, t^1, t^2.

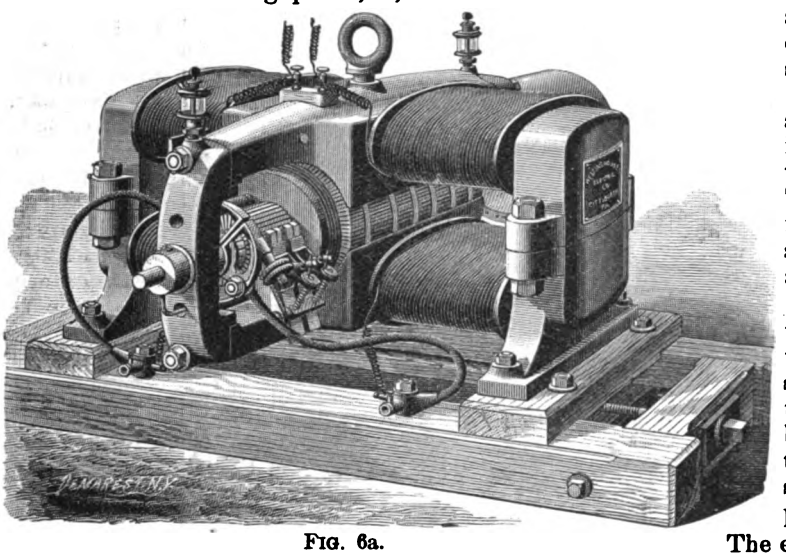

FIG. 6a.

The armature coils are wound as follows: Non magnetic plates or strips are secured to the periphery of the armature, at the ends of which are overhanging plates, m^1 m^1, secured to the ends of the armature. The wire is then wound across the face parallel to the axis, and over the corner of the armature, passing around the insulating strips and under the ends of the plates m^1, filling the spaces between them. In order to shield the wire from

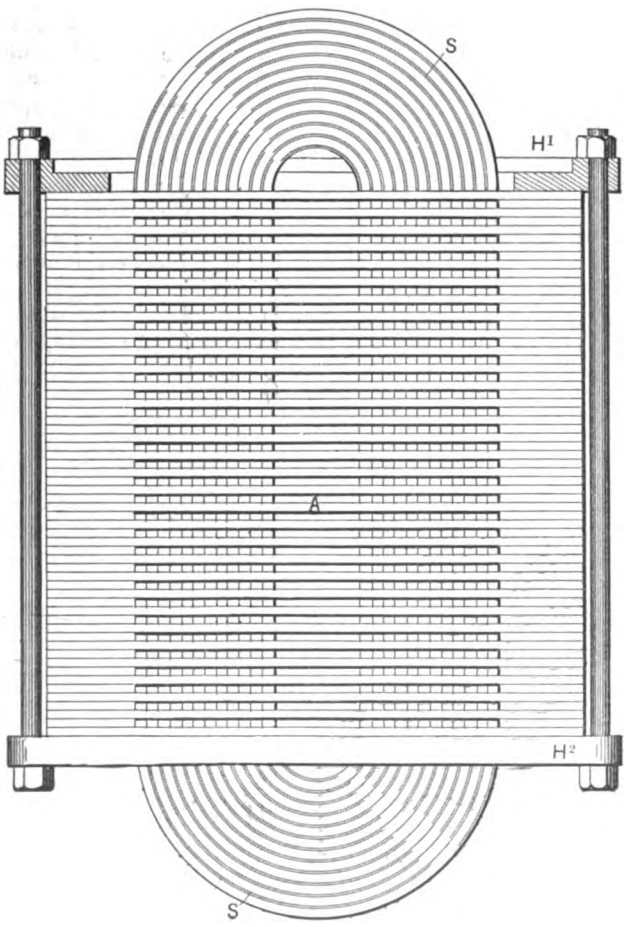

Fig. 7

the edge of the plates, and to avoid bringing the binding plates to the corner of the armature, rings o^1 o^2 are fixed at the edges of the armature, flush with its periphery and having their corners rounded so as not to produce too sharp an angle in the wire. In order to more effectually insulate the wire from the body of the armature, the surface of the latter is covered with sheets of mica, and again after the wire is in position, the whole is covered with mica. The parts of the armature are secured by belts of wire j^1, wound circumferentially.

In the larger machines, instead of winding the armature wire in a continuous circuit, it is divided in parallel in such a manner as to effectually separate the points of maximum and minimum potential. This method of winding is shown in diagram figure 6, and needs no detailed explanation. The smaller, or No. 1 machine, is usually wound in a continuous circuit.

The journals of the armature shaft are of the type known as "ball bearings" which serve to centre the armature automatically. These are designed in a very convenient manner, by making the ball-bushes, n^1 n^2 separate from the split bushes, n^3 n^4. The oil pipe, s^1, extends through the upper section n^2, of the split-bush and into the section n^1 of the ball-bush, and thus serves to prevent the latter from revolving.

The exciter employed for the field circuit of the Westinghouse dynamo is an ordinary Stanley direct current shunt-wound dynamo of the pattern shown in figure 6a.

The weight of the No. 1 alternate machine is 5,000 pounds; No. 2, 7,550 pounds, and No. 3, 13,500 pounds.

The first two are run at a normal speed of 1650 revolutions, and the latter at 1175 revolutions per minute. The electromotive force ordinarily employed in the main circuit is from 1000 to 1100 volts. Not more than an equivalent of two per cent. of the total energy developed in each machine is consumed in energizing the field.

The induction apparatus, commonly called the converter, is ordinarily made in three sizes, respectively adapted to supply 40, 30 and 20 50-volt incandescent lamps of 16 c. p. each, these being the dimensions generally called for in practice. Other sizes however are made, some having a capacity as small as 10 lights and others as large as 80

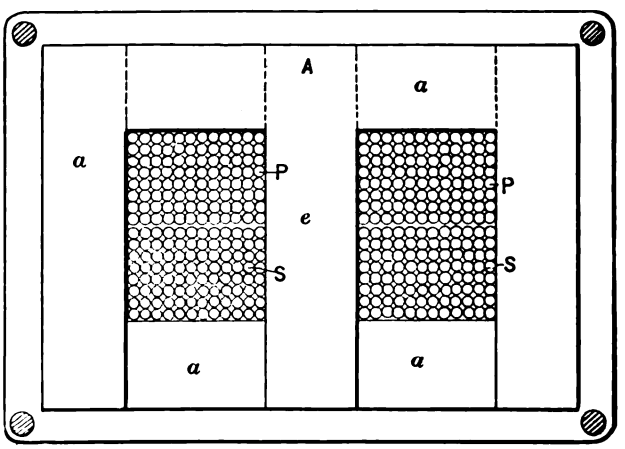

Fig. 8

lights. A 40-light converter contains about 85 pounds of iron and 25 pounds of copper, so that the total weight of metal in this converter is less than three pounds per lamp, while the same proportion holds good with trifling variation in the larger and smaller sizes. In the converters as now made, the efficiency of electrical conversion exceeds 95 per cent., when the potential is reduced from 1000 volts in the primary to 50 in the secondary.

The form of converter used, as originally designed, is shown in elevation in figure 7, and in cross-section in figure 8. The primary and secondary coils are separated and insulated from each other and are disposed side by side as shown at P and S. After these have been wound upon a form into suitable coils and wrapped with insulating

Digitized by Google

material, the inductive plates A, which are in the form of a capital letter E, as shown in figure 9, of thin sheet-iron

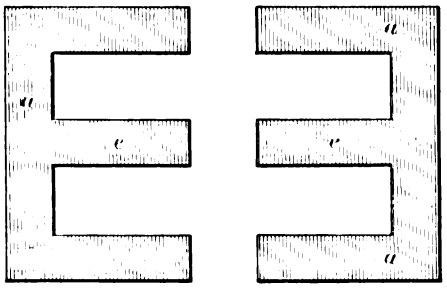

Fig. 9

with an insulating layer of paper applied to one surface, are slipped over the coils alternately from opposite directions, the alternate plates being interleaved with each other as shown at A. Thus the inductive core is composed of a mass of detached plates, each of which of itself constitutes a discontinuous magnetic circuit. The plates are insulated from each other by the paper, and as alternately arranged about the coiled conductors the mass of the core becomes symmetrically disposed about the mean axis of the conductors, a necessary condition for effective work. The iron plates are securely bound together in a solid mass by end frames or heads, H¹, H², which are connected together by longitudinal bolts. A more recent and in some respects preferable form of plate for the

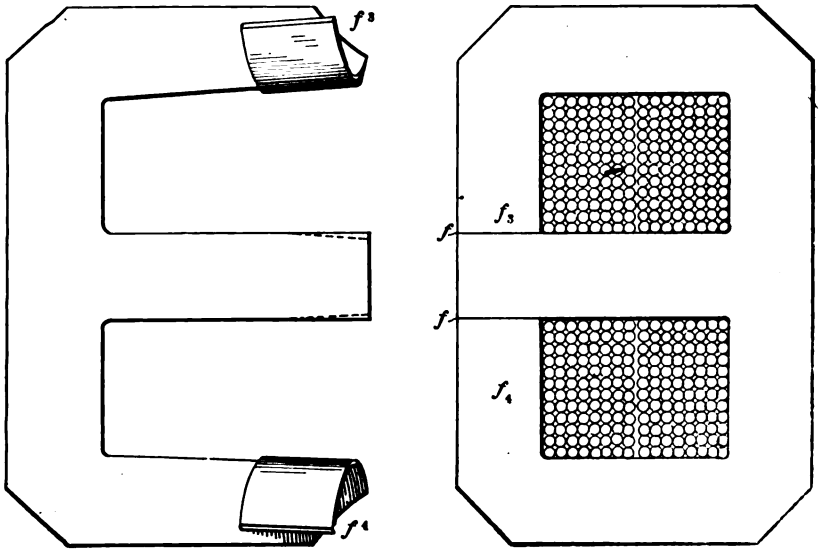

Fig. 10

cores is shown in figure 10, and for convenience of construction is the one now generally preferred. Each plate is in one piece, but is cut at *f f*, the ends f^3 and f^4, being readily bent back as shown to permit the plate to be slipped over the coils.

In order to protect the converter from mechanical injury, as well as from dampness, and also to avoid the possibility of contact with wires carrying currents of high potential, it is enclosed in a cast-iron case or box, made in two parts, and adapted to be secured to any convenient vertical support. Figure 11 is a front view, and figure 12 a transverse vertical section of such a converter-box, with the converter in position. The terminals of the primary coil P of the converter are led into the compartment D¹, and the terminals of the secondary coil into the compartment D². The terminals are secured to bolts or couplings *f f*, mounted upon insulating plates e^1 and e^2. Fusible strips *g*, and switch-plates *h* and *i*, with plugs *k*, are provided for protecting, and connecting and disconnecting the circuits. The fusible strips and their connected conductors are effectually insulated from each other by a plate of fibre r^3. The open fronts of the compartments D¹ and D², are

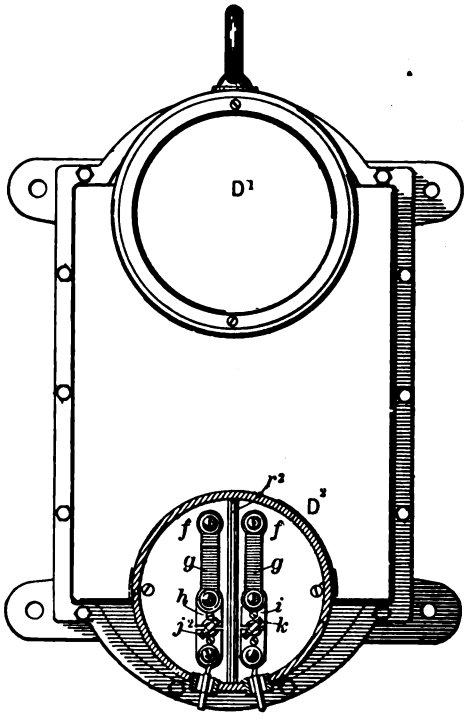

Fig. 11

closed by glass plates T, which permit inspection of the connections without entering the box.

The converter-box occupies but little space, and may be placed in any convenient situation in or about the premises to be lighted, much the same as a gas meter. It is usually preferred, where overhead conductors are used, to mount the converter-box upon a pole in the vicinity of the premises to be lighted, as shown in figure

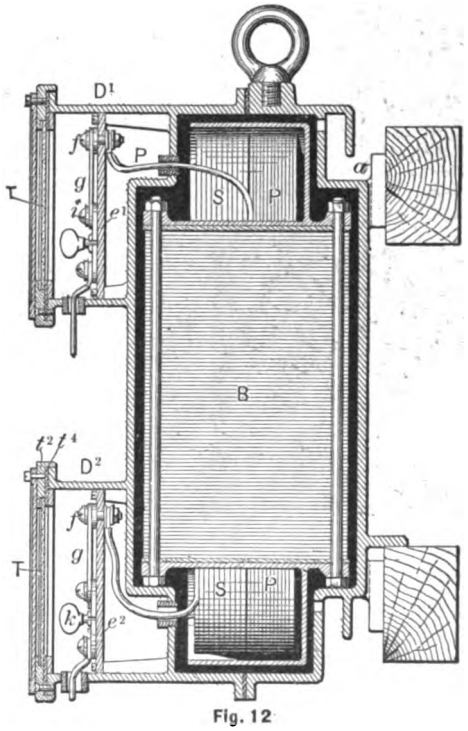

Fig. 12

13, and thus it is only necessary to lead the secondary or low potential wires into the building, the high potential wires remaining in an inaccessible position upon the pole. Figure 13 is a view in North street, Pittsfield, Mass., en-

Digitized by Google

graved from a photograph, showing a very neat form of tubular wrought-iron pole with its converter-box, designed by Mr. Stanley, and employed in the installation recently carried out by him in that town. These poles were manufactured by Robbins, Gamwell & Co., a local firm.

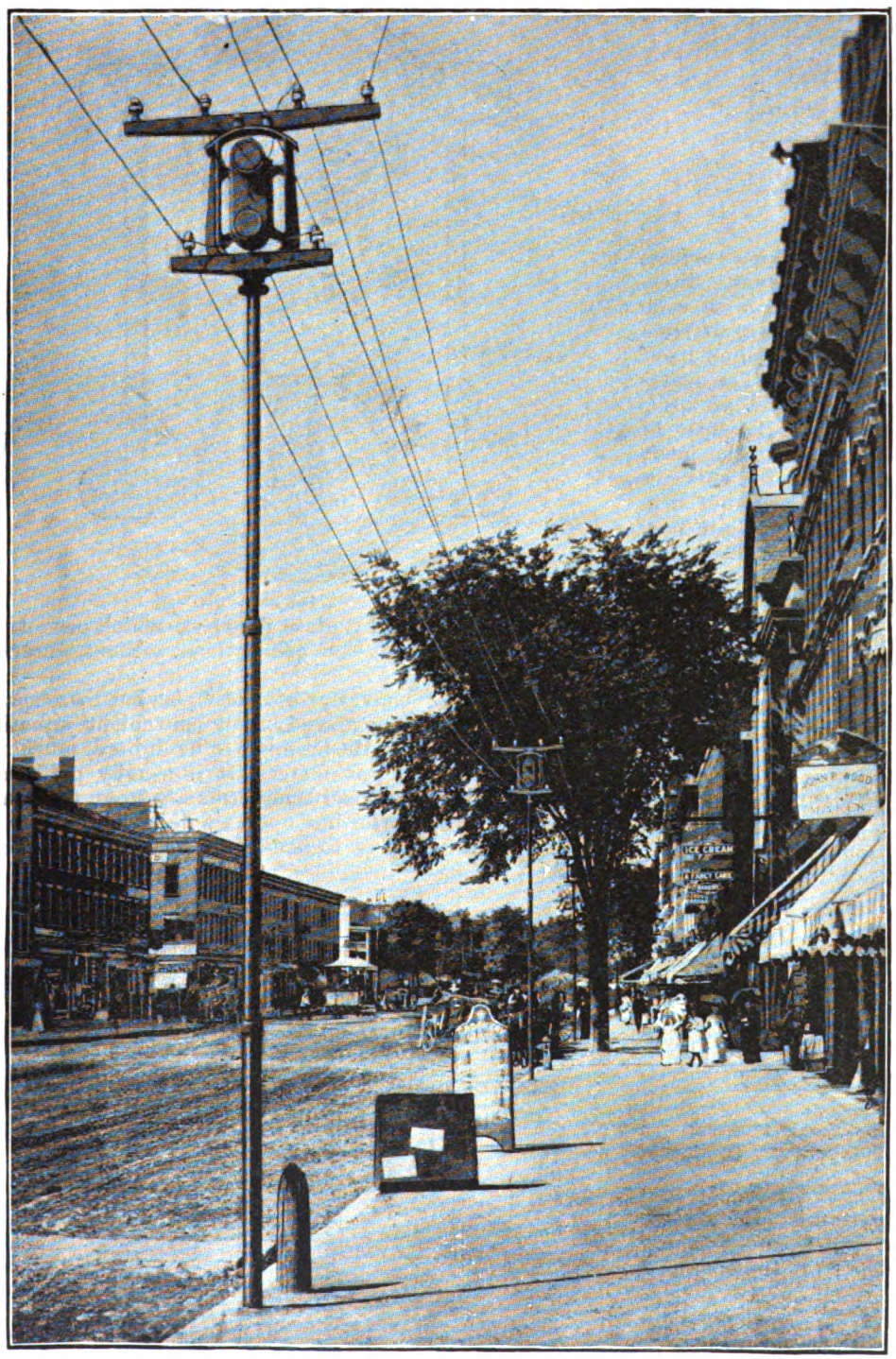

FIG. 13.

The incandescent lamps supplied by the Westinghouse company are made in four standard sizes, of 16, 25, 50 and 150 c. p. respectively. The greater number of lamps required are of course of the 16 c. p. grade, of which figure 14 is a correct representation in its natural size. The filament is of carbonized silk, a material which has been found to serve the purpose admirably when properly prepared and treated. The fittings of the 16 c. p. lamp are neat in design, ingenious in construction and arrangement, and extremely convenient and efficient in practical use. One of the terminals of the lamp is connected to the insulated brass tip shown in figure 14, and the other to the thimble or cup of sheet brass into which the neck of the lamp is inserted. The thimble is provided with a semi-circular circumferential groove at the end next the tip of the lamp for a purpose hereafter to be explained.

Figure 15 is a full sized perspective view of the lamp socket and key, of which figure 16 is an elevation, the outer casing being shown in section. Figure 17 is a plan of the socket, the cap being removed, and figure 18 is a section in the plane of the line $x\,x$ in figure 17. Figure 19 is a perspective view of the same. A perspective view of the socket showng the key and switch is given in figure 20. The various parts are supported upon a block of insulating material, A, upon one face of which is secured a cylindrical cap, B, having flexible resilient arms, b, adapted to grasp the semi-circular groove upon the lamp fitting, before referred to, when the lamp is shoved into its socket. The opposite face of the block A, carries a metallic conducting bar, D, provided with a spring-jack device d^1, d^2, adapted to receive and grasp the central contact tip of the lamp. The contact-spring e is brought into electrical connection with another similar spring, e^2, by means of a moving contact-piece, e, whenever it is desired to complete the circuit between the terminals B and D, for the purpose of lighting the lamp. The contact-piece e, is a metallic pin extending through the pivoted plate K, but insulated therefrom. The standard K^1 to which the plate K is pivoted, is affixed to a crank axis, k, provided with a thumb piece, k^3. The plate K receives its motion through the intermediary of a spiral spring, s, attached at one end to the elbow of the crank axis, k, and at the other to an arm, s^2, projecting from the plate K. When the crank-arm k is turned by the key, the end of the spring s is carried to one side or the other of the fulcrum of the plate K, and thus the tendency is to pull the latter suddenly in the corresponding direction the instant it is over the centre. This snap-movement effectually prevents the formation of an arc between the terminals when the circuit is broken. A tube K^1, of insulating material surrounds the switch mechanism, and secures it against accidental electrical contact with the metallic case T. The cap is secured to the case by small set-screws, o, o, which enter slots forming bayonet joints on each side of the cap, as seen in figure 15. It will be observed that the principle of the adjustable contact between the lamp and the socket in the Westinghouse lamp is precisely the same as that of the spring-jack device which has

Digitized by Google

been so long in successful use in the telegraphic service, the simplicity and continued efficiency of which has been well established.

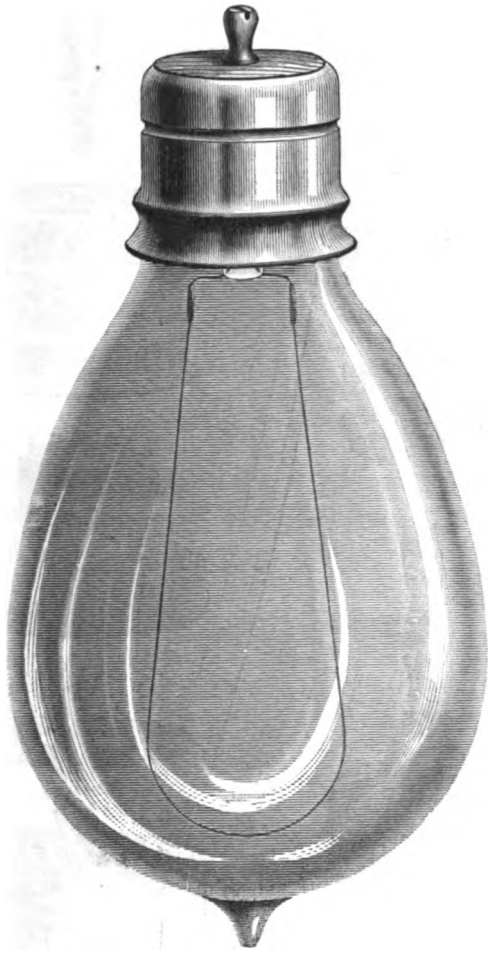

FIG. 14.

Figure 21 shows a fitting designed to be attached to a reading or other portable lamp, and connected therewith by a flexible cord conductor. This is adapted to be inserted into any convenient socket from which a lamp has

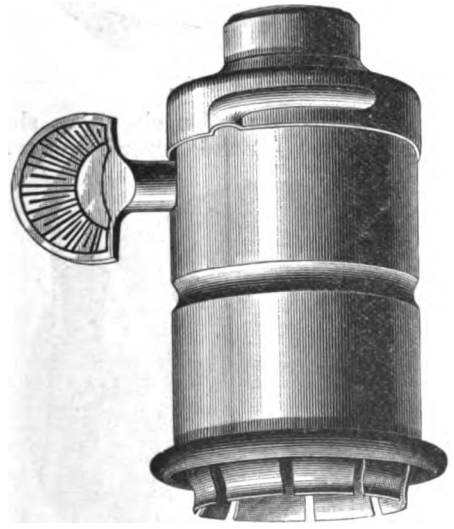

FIG. 15.

been removed, and will readily be understood without detailed explanation by referring to figure 22, which shows the same device with its component parts separated in order to more clearly exhibit its internal construction.

Figure 23 shows the external appearance of the switch which is designed to be placed in a building for turning off and on groups of lamps, either in the entire building or in any particular room.

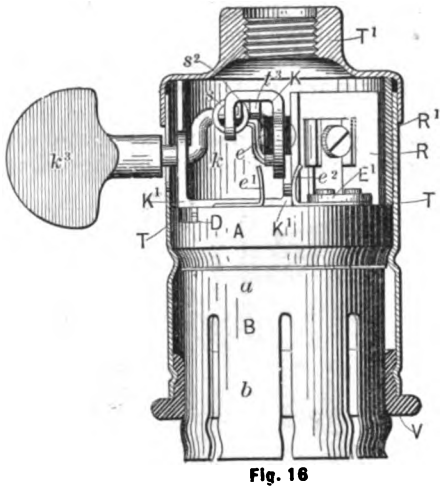

Fig. 16

The question of the arrangement of the converters in circuit for practical work is a very important one. The original plan of Gaulard and Gibbs was to extend a single main primary conductor throughout the district to be served, in which the primary wires of the secondary generators or converters were placed in series, in the manner

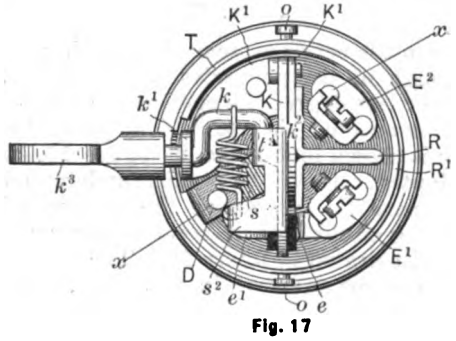

Fig. 17

illustrated in figure 24. In the installation erected in 1885, in the vicinity of Regent street, London, a double or looped wire was used in order not to interfere injuriously with the telephone service, and the converters were alternately put in one wire and the other all round the district, each pair of wires ending in a loop at a point remote from the station.

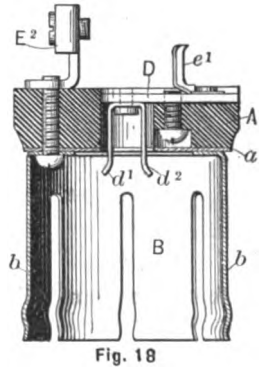

Fig. 18

When the converters are thus arranged it is necessary to maintain a constant current in the circuit. No especial difficulty has been experienced in doing this, as the problem is substantially the same as that encountered in arc lighting, but another difficulty in the series system has always been to maintain a constant potential in the individual lamps. To effect this automatically turned out to be no very easy matter, and many ingenious devices designed for that purpose failed to accomplish their end, largely for the reason that, up to a very recent period, the theory of the action of converters had been but little

Digitized by Google

studied except by specialists, and was not generally very well understood. A simple and effectual solution of the difficulty was found, by arranging the installation so as to bring the primaries of the converters in parallel arc with the generator. When thus situated any fluctuations in the strength of the primary current caused by variations in the amount of consumption in one or more of the secondary circuits, necessarily reacts upon the generator only, without traversing the primaries of any of the other convert-

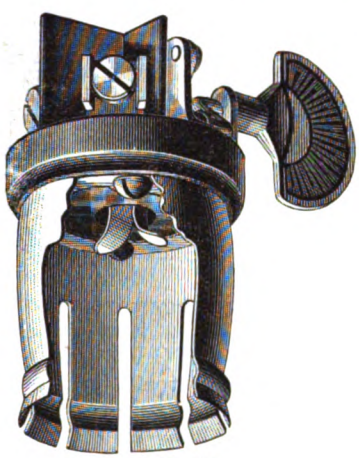

FIG. 19.

ers, whereas in the series system every such perturbation, passing through all the primaries in the system, affected in a greater or less degree the current in every one of the secondaries connected thereto.[5] The parallel system of distribution is shown in diagram in figure 25, and is the one now adopted. It will be readily understood without further explanation. In practice the method of running the distributing circuits where aerial lines are employed is usually that illustrated in figure 26. The poles are fitted with two cross-arms as shown in figure 13, leaving room

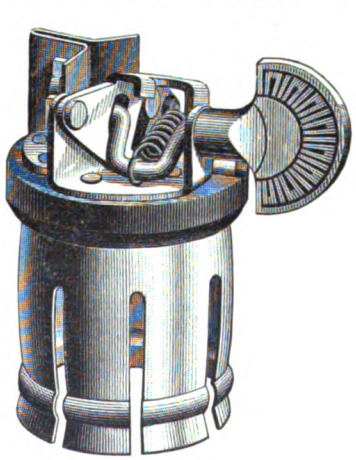

FIG. 20.

for the converter box between them. The upper cross-arm carries the main distributing conductors L^1 and L^2, upon insulators b^1 and b^2, while the secondary or consumption circuits are similarly carried upon the lower cross-arm. Instead of leading the secondary conductors directly to the point of consumption, the converters c^1, c^2, c^3, etc., upon the poles are connected directly to the consumption circuits on the lower cross-arm in parallel, and from these circuits the service wires 11 and 12 for supplying the lamps d^1 and d^2 in the adjacent buildings, are taken off as required. It is of course essential that an approximately equal difference of potential between the secondary conductors s^1 and s^2 should be maintained at all points, and this is effected without difficulty by locating the converters c^1, c^2, etc., at such points and at such distances apart

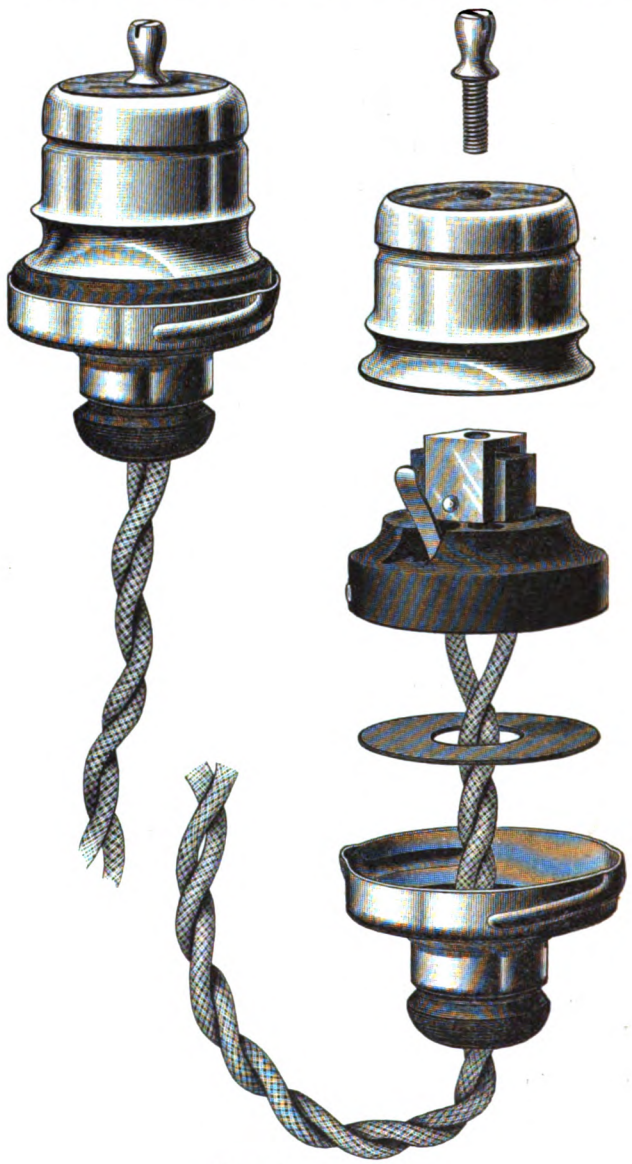

FIGS. 21 AND 22.

with reference to the consumption circuit as shall effect this result. Each one of the several converters (as

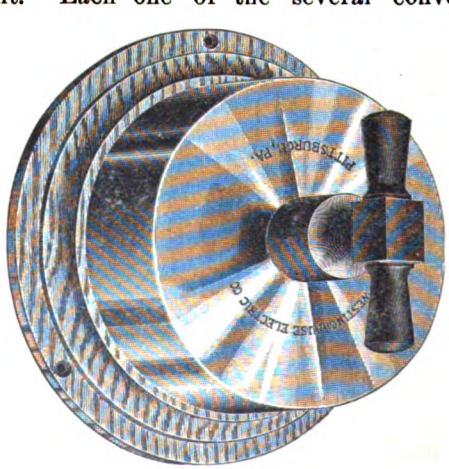

FIG. 23.

explained in connection with figures 11 and 12) is provided with a cut-out plug switch, so that it can be con-

5. This arrangement was first pointed out, though possibly not first tried, by Rankin Kennedy, of Glasgow. His communications were published in the London *Electrical Review*, June 9 and June 16, 1883, vol. xii, 486, 506.

Digitized by Google

nected to, or disconnected from the consumption circuit at a moment's notice, when required.

It is not difficult to understand the reason of the economy in the cost of electrical distribution which is effected by the use of an alternating system worked at a high potential. Considering first the cost of installation, not only is the alternating dynamo much less expensive in its construction than the direct current machine, but the cost of the necessary auxiliary appliances at the central station is comparatively small, and above all the expense of the conductors throughout the system is enormously diminished, as will be readily seen in view of the fundamental law that the electrical energy traversing a conductor of given sectional area is directly as the square of the difference of potential at its terminals; and hence in working at a mean potential of 1,000 volts, as

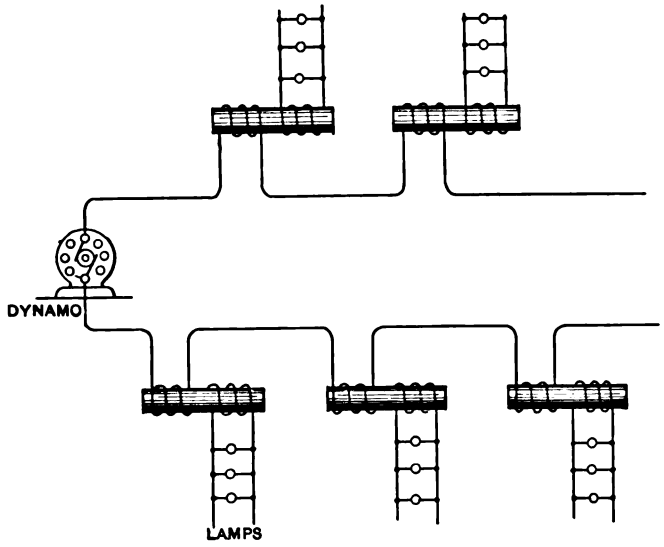

FIG. 24.

is ordinarily done in the Westinghouse system, only about one-thirtieth of the total weight of copper is required in the mains that would be necessary at the potential to which the direct current three-wire system is practically limited, namely, 200 volts. The diagrams, figures 27, 28 and 29, exhibit this difference in a forcible manner, showing as they do, the actual areas of cross-section of the total mass of copper necessary to supply 5,000 16 c.p. incandescent lamps situated at a mean distance of 4,000 feet from the dynamo. Figure 27 refers to the three-wire system, working at a potential of 200 volts with a fall of potential or loss of energy in the feeders of 10 per cent., the usual conditions under which this system is worked. Figure 28 shows the conductor required for the same work in a Westinghouse installation wired for a loss in the feeders of 2.5 per cent., only one-fourth as much as the direct system. If this loss were increased to 10 per cent. to equal the loss in the direct system, the same work might be done on a wire of the size shown in figure 29, but this would lessen the economy of working to an undesirable and unnecessary extent. It will of course be understood that the diagrams show the aggregate cross-section of all the feeders in each system, and not that of any single one.

The graphic diagram, figure 30, shows in an equally striking manner the saving in the cost of the conductors which is effected by distributing at a high potential under the above conditions.

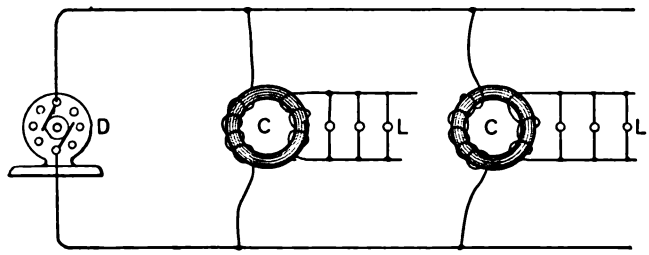

Fig. 25

The gain in economy of operation in the conversion system, though less apparent than in cost of installation, is nevertheless of great importance. The current in the consumption circuits is adapted to meet the requirements of a 50 volt lamp, which, by reason of its thicker filament, has a much longer life, and will bear a much higher energy of light conversion than the 100 volt lamps used in the direct system, so that it consumes 15 per cent. less energy per candle-power, a most important consideration. By reducing the fall of potential in the main circuits to two and one-half per cent., the feeder equalizers, pressure in-

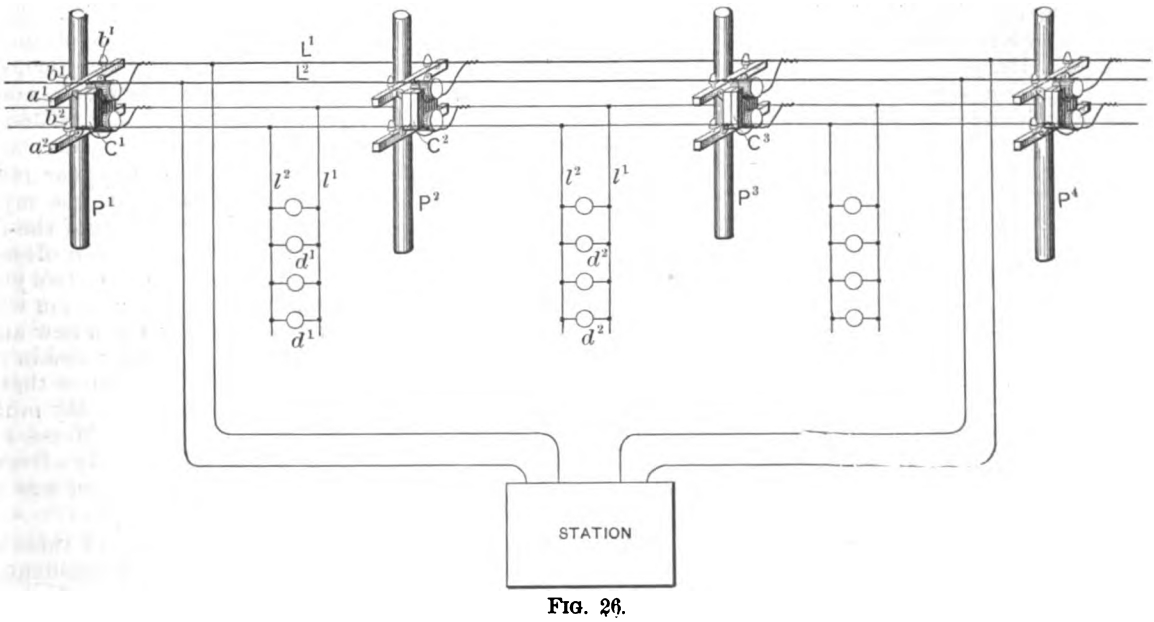

FIG. 26.

dicators and complex wiring of the direct system are altogether dispensed with, together with the services of

Digitized by Google

the special attendant required to manipulate these appliances.

Direct Current
MULTIPLE SERIES
or "THREE-WIRE" SYSTEM.
Potential 200 Volts.
CROSS-SECTION of WIRE required for
5000 16 c. p. Incandescent Lamps.
Average Distance from Dynamo 4000 feet.
Loss of potential 10 per cent.
Diameter 4000 mils.
Weight 50 lbs. per foot.

Fig. 27

Experience has demonstrated that the trifling loss of energy in conversion from high to low potential at the point of consumption is so much more than offset by the gain at other points, especially in the increased efficiency of the lamps, that an alternating plant may be counted on to give ten 16 c.p. lamps per indicated horse-power, as against six to seven lamps per indicated horse-power by the direct system, which is equivalent to a saving of about 25 per cent. in the quantity of fuel necessary for operating the station.

Recent experiments have proved that the arc lamp may readily be adapted to work on the 50 volt current from the secondary of the Westinghouse converter, which renders the alternate system peculiarly well adapted to fulfill the requirements of a mixed incandescent and arc plant, such as is sometimes required in towns of moderate size.

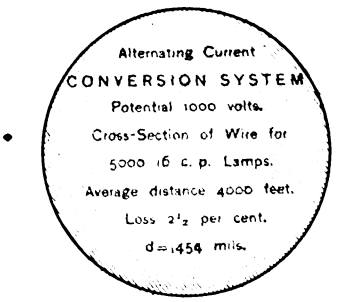

Fig. 28

Alternating current conversion system.
Potential 1000 volts.
Cross section of wire for 5000 16 c. p. lamps.
Average distance 4000 feet.
Loss 10 per cent.

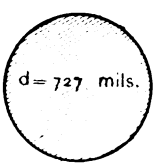

Fig. 29

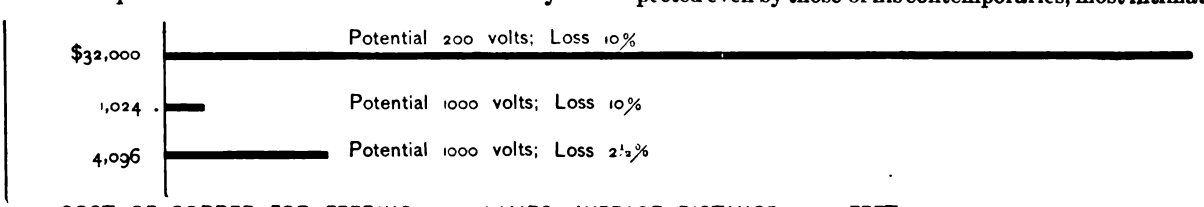

COST OF COPPER FOR FEEDING 5000 LAMPS; AVERAGE DISTANCE 4000 FEET.

Fig. 30

AN UNPUBLISHED CHAPTER IN THE HISTORY OF THE ELECTRIC TELEGRAPH.

THE following interesting account of the early development of the American electro-magnetic telegraph, was written by Alfred Vail, the partner and associate of Prof. Morse, its date, according to his diary, being January 15th, 1848. The manuscript is in his own handwriting throughout, and has never before been printed. The true history of the part taken by Alfred Vail in the invention and development of the invention known to the world as the Morse telegraph, is but faintly indicated in this hasty sketch, and in its entirety is yet to be written. The remarkable abilities and tireless industry of Vail, were only surpassed by his exceeding modesty, and thus it happened that the true greatness of his character was scarcely understood or suspected even by those of his contemporaries, most intimately associated with him in the ordinary concerns of life. The telegraph of modern times, though bearing the name of Morse and unquestionably suggested by his original conception, contains in its essential features scarcely a trace of Morse's work. It is in fact as it stands to day, an invention of Prof. Joseph Henry, adapted to commercial uses by Alfred Vail.—[ED.]

SOMETIME during the early part of the year 1837, having called at Professor Morse's studio (it was my habit to make him occasional visits, being a student of the University of the City of New York of which he was a professor, having had a previous acquaintance of some one or two years boarding at the same house), during a conversation with him he told me that he was about to bring out a new and important discovery which would make some noise in the world. I expressed a wish to see it, and he replied that he would apprise me and send me an invitation. My mind became deeply impressed with what Professor Morse had stated, and I called upon him the more frequently afterwards, but do not now recollect that anything further was said about the invention.

However, it so happened that on one of these occasional visits, prior to September 4th, 1837, I accidentally, without invitation, called upon him at the University and found Professor Torrey and Professor Daubeney in the mineralogical cabinet and lecture room of Professor Gale in the University, where Professor Morse was exhibiting

Digitized by Google

to these gentlemen an apparatus which he called his "electro-magnetic telegraph."[1]

There were wires suspended in the room, running from one end to the other and returning many times, making in all 1,700 feet. The two ends of this wire were connected with an electro-magnet fastened to a vertical wooden frame. In front of the magnet was its armature and also a wooden lever, or arm, fitted to hold at its extremity a lead pencil. This lever was supported upon an axis which permitted it to work freely. There was also a spring connected with the lever to carry the armature from the magnet when the wires were broken (separated) at the ends. To these vertical supports were also fixed a train of wheels, similar to those of a wooden clock, which with rollers drew off a strip of paper wound round a pulley by means of a weight. This paper passed over a roller directly under the point of the lead pencil in the end of the armature lever. The magnet and lever were so placed in the vertical frame that the movement of the pencil, always touching the paper, was across it and not parallel with its length.

There was another apparatus made of two long flat pieces of wood, so fastened together by their sides that the space between them would admit of pieces of metallic plates of type-metal, some of which were thick spaces, commonly used by printers for spacing lines, and had notches in them. There were others also which appeared to be cast. These types with their notches and spaces were used for breaking the circuit by raising the wire out of a cup of mercury and thus letting the battery into action or taking it out, producing magnetism in the electro-magnet and then divesting it of magnetism.

This instrument I saw work and produce that peculiar kind of marking which appears like the letter **V** or **W**, and described, page 75, in the work on the American electro-magnetic telegraph.[2]

I became thoroughly acquainted with the principles of its operation and I may say struck with the rude machine, containing, as I verily believed, the germ of what was destined to produce great changes in the condition and relations of man. I well recollect the impression it then made upon my mind. I rejoiced to think that I lived in such a day, and my mind contemplated the future in which so grand and mighty an agent was about to be introduced for the benefit of the world. Before leaving the room in which I beheld for the first time this magnificent invention, I asked Professor Morse if he designed to make an experiment on a more extended line of conductors. He replied that he did so intend, but desired assistance to carry out his plans. I then promised him assistance for a share in the invention, to which he assented. I then returned to my boarding house, locked the room door and threw myself upon the bed, and gave myself up to the reflection of the mighty results which were to follow the introduction of a new agent in meeting and serving the wants of the world. With the atlas in my hand I traced the most important lines that would certainly be erected in the United States, and calculated their length. The question arose in my mind whether the magnet could be made to work through great lengths, and after much reflection I came to the conclusion that, provided the magnet would work at a distance of eight or ten miles, there was no risk in embarking in the enterprise. And upon this I decided in my own mind *to sink or swim with it.*

An agreement was soon thereafter entered into, dated 23d September, 1837, in which for certain considerations and services a certain interest in the invention was to be made over to me. And upon the execution of these papers, Professor Morse and myself left the city for the Speedwell Iron Works[3] for the purpose of constructing suitable instruments for exhibition before the members of Congress. Immediately was the work set about. Ten miles of copper wire and a quantity of ribbon wire were ordered. The frame, wheels and drums of the register instrument were made, for then it was designed to put a sheet of paper upon a drum which slid upon a square bar of cast steel about 18 inches long. This drum had a single spiral on one end made of steel plate which projected beyond the surface of the drum. Between each drum there was a long brass bar containing teeth of the same gradation as the spiral and into which the spiral worked, so that at every revolution of the drum it would move on the steel bar the distance of one spiral on the end of the drum. The drums were placed horizontally and side by side, and the machinery was so constructed that when the paper of one drum was entirely filled with the markings of the pen it could be stopped and the other cylinder commence its movement. The pen was placed midway between each end of the steel shaft, whose length was nearly twice that of the drum.

This machine was never entirely completed as it was thought to be too cumbersome, and also on account of a better mode having been devised, so as to dispense with one of the drums. This improvement consisted of a single drum about three inches in diameter which opened through its centre. When it was designed to put paper on these two half drums the paper was inserted into a clasp on the side of each half drum, which shut down, holding the paper fast. The two half drums were then taken, one in each hand, and placed on the square cast-steel shaft, and when brought together a catch secured both half drums together and drew the paper tight to the outer surface of the drum. When on the shaft, the spiral on the end of the drum moves in a toothed rack below, and thus carries the paper along, making a sort of spiral written line on the paper. When one drum was about to be filled another was put on the shaft, and by a peculiar catch fastened to the one before it until the first was entirely filled, when it was taken off, the paper removed and new paper put on. There were two machines of this kind.

Dr. Gale, in the meantime, was engaged in superintending the construction of two batteries of the Cruikshank kind, of 60 plates, each 6 inches square.

During the construction of the register and magnets there was also constructed a machine for holding the type in convenient rules about three feet long, called port-rules, and also apparatus for carrying it along at an equal speed, so as to close and break the circuit.

There was also another instrument made for changing the poles of the electro-magnet, so that the current should pass through the helices of the magnet, first in one direction and then in another, the object of which was to counteract the effects of permanent magnetism which it was apprehended would increase to such a degree, from long use of the current in one direction, as to destroy its electro-magnetism by producing permanent magnetism. It was, however, found, after a short trial without it, that it was useless and could be dispensed with.

During the time these things were in progress it was a common question with those who visited the works to see our progress, and with whom we met at other places, how far the current could be transmitted through a length of wire. This question was always answered by Professor Morse and myself, that if the current would traverse the wire but ten miles it could be used for a hundred or more.

So clear was it to my own mind and so well did I understand Professor Morse's ideas upon the subject, that we were fully persuaded of its necessity, and so spoke to each other. It became a part of his plan and one supposed to

1. The original instrument which Mr. Vail saw on this occasion is preserved in the office of the Western Union Telegraph Co., at 195 Broadway, New York. An engraving and description of it is in Reid's *Telegraph in America*, pp. 54, 55.—[Ed.]

2. Vail's *American Electro-Magnetic Telegraph*, Philadelphia, 1845.—[Ed.]

3. These works are near Morristown, N. J., and were at that time owned by Judge Stephen Vail (the father of Alfred) and his son George Vail.—[Ed.]

Digitized by Google

be indispensable, since believing that the current would diminish in power as the distance increased, it was admitted by him that although such an instrument might not be required for twenty or thirty miles or more, yet nevertheless it would be necessary to use it at the end of a line of such length as should reduce the current down to a very feeble power. The construction of such an instrument as the relay magnet was not deemed at the time as necessary for the object in view, and its construction was therefore delayed until it was required by a more extended experiment. The design was to try the instruments with a coil of wire of ten miles and with such a battery as should work the magnet through the whole ten miles without a relay or receiving magnet. Had Professor Morse stopped short of this, the plan of making a suitable exhibition before Congress would not have been complete. The object of using ten miles at least was, that the new discovery might satisfactorily demonstrate that the current could be transmitted through ten miles of wire, and at that extremity be made to operate an electro-magnet, since visual telegraphs are usually at that distance apart, and were Professor Morse's plan capable of working at no greater distance it had this superiority over the semaphore, that it could be worked during the night and during fogs, rains, or any kind of weather.

These preparations having been completed at Speedwell Iron Works, the two instruments were put up in a vacant room connected with the works, and exhibited to the ladies and gentlemen of Morristown. On this occasion only two miles of wire were used, the remaining portion of eight miles not having been brought out from the city. A few days after this exhibition the instruments were taken to the City of New York and set up in the mineralogical lecture room of the University. Here three days of exhibition were given to invited ladies and gentlemen. The instruments were worked through ten miles of wire.[4] At this time the pencil was used for marking the paper fastened on the cylinders, as previously stated. After this exhibition the instruments were taken to Philadelphia and by invitation exhibited in the great hall of the Franklin Institute, Philadelphia. After a stay of a few days at Philadelphia the instruments were taken to Washington and set up in the room of the Committee on Commerce,[5] where they were exhibited for several weeks to members of Congress, President Martin Van Buren and his Cabinet (among whom was the Hon. Amos Kendall, the present agent for three-fourths of the patent interest), and also to such persons as were desirous of seeing the invention.

On the — of April, Professor Morse, Hon. F. O. J. Smith and myself set out for the north, the two former with the intention of preparing to sail at an early day for Europe, and myself to Speedwell Iron Works to prepare suitable instruments for them to take with them, in order to secure patents in European countries. On my arrival at Speedwell two instruments were commenced on a different plan from that so recently exhibited at Washington. The paper was to be ribbon-paper and the pens to hold ink instead of using the pencil as in the former case. New devices were also made for the port-rule, one of which was a groove in which the punctured type were to slide down an inclined plane until they came in contact with a brass wheel surrounded with small wire projections that matched the holes in the type. This wheel was driven by clockwork and gave a uniform motion to the type. Another plan was that in which the type were to descend vertically in contact with the wheel, as described in figure 17 in the "Description." The pen was made by taking a piece of plate brass about the 1-16 and $\frac{1}{2}$ thick and $\frac{3}{4}$ of an inch long and $\frac{1}{2}$ inch broad, slitting the plate into two plates for about half its width with a saw $\frac{1}{16}$ or less in thickness, and then sawing with a fine saw at right angles the opposite edge in four equally distant places until the cut reached the parallel division. The spaces were filed to a point so as to form pen points, and the wider saw-cut was then stopped at its two ends so as to form a reservoir for the ink. This, soldered to the end of the magnet lever, was used as a pen for making four dots or lines on paper instead of a pencil as in the former case. The paper was made to pass over a cylinder directly under the pen, so as to make the proper marks. The paper was driven by a clock train as in the other cases.

An alteration to some portions of the instruments was made in New York by Professor Morse after they left the Speedwell works, and on the 16th of May, Professor Morse and Hon. F. O. J. Smith sailed for England for the purpose of securing patents in Europe. Their first visit was to England, afterwards to France, and then back to England. During their stay in France they took out a patent for the electro-magnetic telegraph for the transmission of intelligence and also its application to railroads. Professor Morse also entered into a contract with the Russian minister at Paris for the construction of lines in Russia, and which required the approval of the Emperor to make it good. He also commissioned an agent traveling through various European countries to effect any arrangement which might be made for its introduction. He returned to England, and the fate which his application for a patent there met with is stated at large in a paper written by Professor Morse respecting Sir John Campbell.

On his return to America he applied himself occasionally to perfecting his invention, and as I occasionally called upon him at his office I was made acquainted with his improvements. He was also engaged at this time with the new discovery of Daguerre.[6] One of his improvements (so considered at that time) was the correspondent for the purpose of transmission by means of separate keys for each letter of the alphabet, by which he could, on pressing down a key, wind up a weight over a pulley, then releasing his finger from the key, the type for breaking and closing the circuit representing a letter would slowly return to its former position, producing the required marks and spaces for making the letter. He was also much engaged in producing some mode of marking, better suited to the purpose of marking on paper than lead pencils or pens supplied with ink. In this his modes were numerous, such as marking upon metallic plates, upon different kinds of prepared paper. All these were in turn thrown aside for some better device.

Being called upon by the American Institute to make an exhibition of his invention before them, Professor Morse prepared two instruments which were put up and exhibited at the Fair in the fall of 1842.

Alfred Vail

4. This was on January 4, 1838.—[Ed.]

5. The wire was placed on two reels of five miles each. In the Capitol were used numbers entirely and a dictionary.

6. This discovery was the well-known daguerreotype process, of which all the modern photographic processes are the outgrowth.—[Ed.]

DISTRIBUTION BY ALTERNATING CURRENTS.[1]

BY M. M. M. SLATTERY.

REPORT OF COMMITTEE ON ELECTRICAL DISTRIBUTION BY ALTERNATING CURRENTS.

One short year ago the commercial success of the branch of electric lighting in which induction coils are used was by some of our best authorities considered very problematical, but practical use of the induction system has not only succeeded in commercially converting high tension

1. Read by Mr. Slattery, as Chairman of Committee on Electrical Distribution by Alternating Currents, before the National Electric Light Association, at Boston, August 9th, 1887.

Digitized by Google

electricity to low tension for electric lighting purposes, but also high tension theoretical opponents by practical demonstration of facts.

Upon the occasion of the last convention, the extensive use of the induction system received its first authoritative indorsement by our esteemed friend, Dr. Otto A. Moses, and although he was by some considered over enthusiastic in his statements, time has served to prove the correctness of his views and the realization of many of his anticipations.

We will go back six months, and, mentally, what do we see in this business from here. A few experimental plants scattered about in various parts of the country struggling for public recognition, and with the innumerable detail difficulties which dog the footsteps of every new departure; difficulties, the magnitude of which are usually in proportion to our ignorance of their nature, and therefore more frequently than not, unduly magnified.

Now, what have those difficulties been, and has the past six months' experience enabled the manufacturing companies engaged in this branch of business to eliminate them?

We find there were three factors in the induction system that required all the ability of the electrical engineer to work out and place upon a proper footing, namely, the dynamo machine, the induction coil, and the disposition of the external circuit to take the best advantage of the use of the induction coil.

Of course there were alternating dynamos in existence, as were also induction coils before this branch of business had acquired any prominence, but they were not such as would meet the new requirements.

We will first take the dynamo. It will be familiar to all of you, that no matter how intimately acquainted you may be with the construction of dynamo machines, when you start in to build a new type, your previous experience, however valuable it may be, does not enable you to foresee innumerable detail difficulties which will assuredly develop with practical use, and which take time to ascertain and remedy.

Well, so far as we have been able to learn the weaknesses which developed in this apparatus were first, the liability of the current to jump across the coils in the event of the field being excited with the armature circuit open. This open circuit sometimes happened by a dead cross occurring in some place in the mains, blowing the fuse at the dynamo, thus opening the circuit, and then the field being fully excited, the armature would generate an exceedingly high electromotive force for an instant; the current under the circumstances would be very liable to jump across the coils of the armature, and other hurtful effects to the machine would ensue; the remedy for that was inserting at every branch in the external circuit a junction fuse, and at various points along the mains and sub-mains section fuses to such an extent as to make an open main a remote contingency. It was also found that the armatures heated excessively owing to the presence of the plaguey Foucault currents. It was found that this evil could be almost wholly suppressed by building the armature without iron, and avoiding as much as possible the use of masses of metal in proximity with the armature coils. In this connection Siemens' early type of alternating dynamo, slightly modified to meet the new requirements, might read us a lesson.

It was a bold step when the alternating dynamos were constructed with iron cores, and those who make this class of machine for this high tension incandescent business might give us some interesting information. To my mind this iron core construction speaks of disagreeably high temperature. I do not say that they will not be able to present a rational theory why this evil may not be, or has been, greatly modified, but the fact existed in the past, and as far as we have been able to ascertain stands unrefuted at present. One thing, however, is pretty evident, that just now this type of machine appears to be finding a rather extensive use, evidencing that it must be doing good work. So much for the alternating current dynamo, a machine destined to play a most important part in the future electric lighting business, and in the light of the past experience no doubt should exist in the minds of anyone here that these dynamos in practical use are now almost, if not quite, as reliable as any other dynamo; while coupled with this is the important factor of a pretty close self-regulating property attainable in this system, without the necessity for any particular method of winding, that property following chiefly as the result of the use of the induction coils. It is satisfactory to know that during the probation of this system every accident of any importance which has occurred to the dynamos has been of a purely mechanical nature, and our mechanics have reduced them to a minimum.

No doubt the induction coils have been the source of considerable anxiety, not because there was any obstacle in the way of obtaining high electrical efficiency, as this latter appears not to have been by any means a difficult problem to solve. The source of greatest trouble has been, as far as I can learn, that of insulation. In what form will the weakness appear has been a question often asked himself by a timid electrician, and as usual the most unlooked for troubles developed. At one time an unaccountable defect in the insulation of the secondary coil would occur, cutting out a number of convolutions, thereby causing annoyance by reducing the incandescence of the lamp in its circuit; the remedy was simple—increase the insulation of the wire and exercise still greater care. The same accident would still more frequently happen to the primary coil; the same remedy applied overcame it; sometimes a number of the layers of the primary coil would thus be suddenly cut out, resulting in the passage of a much heavier current than the fuse in the coil box had carrying capacity for; the fuse would then melt and possibly draw an arc that you had a great deal rather do without if you could; the remedy for that was, keep on insulating the primary coil layers from each other until the trouble ceased, and increase the distance between the ends of the primary fuse to such an extent that when the latter melted, an arc, no matter how great its volume, would not be able to bridge over the distance which, after all, was calculable because the E. M. F. was constant. Then again metallic contact would take place between the induction coil and the iron box in which it was mounted, and if that box happened to be placed anywhere near a ground, possibly unpleasant electrical experiences might be related in wet weather. It was again only a question of looking out for the insulation to reduce such defects to a minimum; well, the insulation appears to have been looked out for, as the smooth and safe working of that branch of the business would now seem to testify, and to-day that part of the system can be made as reliable, simple, and as easily disposed of as any other part of an incandescent system.

Thus the two new and troublesome factors have gradually and surely been strengthened for their future work.

The next in the system, viz., that method of distribution which would enable you to utilize the induction coil to the best advantage, although apparently presenting the simplest problems at the outset, has required a great deal more thought than was anticipated. It was found that no particular rule, as in the case of low tension distribution, could be carried out, the methods of distribution varying with the condition of the district in which you had to distribute. In some cases the wires were run out from the central station through the centre of distribution, and tapped at any point along the route where lights were required. This was the earliest and simplest form of distribution, and answers perfectly well for comparatively small installations, it being desirable to keep the loss in the mains down to about two per cent. and perhaps about two or three per cent. in the induction coils, so that the incan-

Digitized by Google

descence of the lamps should not vary appreciably throughout the system—this arrangement of the circuit may be carried out in small and very scattered towns, where it has been found to answer admirably. In other cases, where the district is more densely populated and a large installation is required, the inductoriums are placed in the centres of distribution and used like so many stationary dynamos, the high tension primary current with comparatively small conductors feeding each of these centres, the secondary or distributing circuit being taken where lights are required; still other methods of distribution are carried out, but what has been stated in this connection will serve to show that again the past year's familiarity with the business has given an opportunity to perceive and profit by many advantages the system offers.

One of the last, but by no means the least, points that I shall touch upon in this interesting subject is the question of comparative cost of the main conductors required in installation of an induction and low tension incandescent plant. Not at all infrequently we shall find ourselves called upon to figure upon a plant like this:

From the source of generation to the point of distribution is one mile and a half, making a three-mile circuit; at the point of distribution you are required to distribute some 400 16 c. p. lamps, at say 5 per cent. fall of potential, which appears to be about the limit allowed the induction system. The conductors for this purpose in the induction systems now in use would be No. 2 Brown & Sharpe, which will cost about $230 per mile. In the case of the low tension installations upon the low tension system, you would require a conductor costing about $1,050 per mile.

Should you be required to distribute throughout the whole of the length of the circuit, the wire such as is used for ordinary arc lighting purposes would be amply sufficient for the induction, and of course a proportional reduction may be made in the low tension.

Now, a great many exaggerated statements are made with regard to the dangerous shocks to be expected from this alternating current, and while I am not prepared to say that the physiological experience of a shock from a thousand volt dynamo is the most agreeable thing in the world, I am prepared to say that the shock is by no means as severe as that received from a continuous current dynamo of the same voltage. A few weeks ago a man showed me his hands, which were horribly burned. He had received a shock from an eleven hundred volt dynamo, and he said with a visible tremor in his arms, as if the recollection of that shock was still vividly impressed upon his mind, that he experienced the effect of that shock for more than a week afterward. A friend of mine was testing a 400 light 1,050 volt alternating dynamo, fully loaded, only a few days ago, and going towards the machine his foot slipped and he fell quite close to it; in his confusion he quickly reached out his hands and unfortunately placed them directly upon the poles of the dynamo. He said from where he fell to the wall behind him was about fifteen feet, and it seemed to him as if that dynamo was suddenly converted into an electrical gun, and he got shot across the room until the velocity of his movement was interfered with by the wall. There was scarcely the appearance of a burn on his hands, merely a pin's head matter, while the effect of the shock was felt by him only for a few hours. It might be said that the difference of effect of the shock was owing to the difference in the temperament of the two men; that may be so, but I have received three pretty severe shocks from a 1,000 volt alternating machine, and however much I may have felt inclined to dispense with the shaking up it gave me, the experience has been of value to me—one cannot have everything.

One word more in conclusion. The induction system has evidently come to stay, not because enthusiastic advocates think or say so, but because the expert public, the central station public, have practically indorsed it, because it more nearly than anything else meets their immediate and anticipates many of their future requirements. More especially is its advent doubly welcomed just now with this misconducted overhead conductor warfare pressing on every side, and which is every day acquiring seriousness in proportion to the increase of copper wire in the air, and I think that this system, with its comparatively small mass of conductors, will postpone for a considerable time the necessity of going underground with the electric light wires until more extended experiments shall have given us the confidence in underground systems that experience in the past has materially shaken.

ELECTRIC LIGHT FOR THE NEW CRUISERS.[1]

BY LIEUT. J. B. MURDOCK.

THE question of how to best install the electric lights in the new men-of-war has been considered in detail, and it seemed advisable to bring the matter before the National Electric Light Association, that the manufacturers of the country might have the problem presented to their consideration in advance of the time when they would be asked to act upon it. In conversation with managers of various companies, it has been impressed on my mind that the peculiar conditions existing on shipboard are but imperfectly understood, and as a natural consequence they have not as yet been as satisfactorily met in this country as abroad. I am confident that American ingenuity and skill can fully meet our requirements, and hope that the number of dynamos, about sixty, which will be needed for the vessels already authorized by Congress, may be considered as meriting the experiments necessary for their successful installation.

I am authorized to present in a general way the views of the bureau of ordnance of the navy department on the peculiar conditions to be met and on the best method of meeting them.

In men-of-war the prime requirements of all kinds of apparatus are compactness and lightness. Neither of these is of any material consequence in electric light installations on shore, and both are generally ignored. Attention has there been given mainly to the question of efficiency of conversion, and a glance at the advertising columns of any of the electrical journals shows that the maximum efficiency and best system of electric lighting is possessed by each of a dozen companies. Our conditions, so far as the dynamo is concerned, may be summarized as wishing the greatest electrical output for a given weight and bulk, and although at first thought this may seem to be essentially the same thing as efficiency of conversion, it is widely different.

The following figures of well-known American dynamos illustrate this point. The comparison is made on the basis of "watts of output per pound of dynamo." The weight, speed and electrical output have been obtained in general from the manufacturers, and are given, of course, only approximately. In this comparison it is of course necessary to consider also the sizes and the number of revolutions, the watts per pound increasing with large machines and high velocities:

The next consideration is that of the connection of the dynamo to its engine. A starting point is afforded in the rule that belting should never be used on a sea-going vessel. Nothing so radically violates our condition of economy of space as the use of belting. When space is saved by the use of a short belt, the working conditions are comparatively unsatisfactory. Belts are liable to be thrown off by the sudden change of load to which our dynamos are subject, and become a source of danger to the attendants if the ship is rolling heavily. The adoption of friction gearing between engine and dynamo has been sugges-

1. Read before the National Electric Light Association, Boston, August 10, 1887.

Digitized by Google

ted, and is probably practicable, but its durability on shipboard, when the motion of the vessel must cause work-

TABLE I.

DYNAMO.	Revolutions.	Watts in external circuit.	Watts per pound.
Edison, No. 20	800	50,000	6.0
Brush, H. 3	850	66,000	9.4
American, 50 lights	875	21,600	5.7
Westinghouse, No. 18	900	30,000	5.4
Hochhausen, No. 8	1000	35,200	8.8
Mather, 500 lights	1050	35,250	7.4
Weston, 6 W. I	1050	11,500	4.1
Brush, G. 4	1050	28,300	9.3
American, 16 lights,	1075	6,480	4.8
Weston, 7 W. I	1100	20,125	6.5
Westinghouse, No. 12	1100	18,000	4.
Brush, F. 5	1100	19,000	8.5
Thomson-Houston, H. I	1150	25,600	6.1
Edison, No. 12	1200	30,000	6.9
Hochhausen, No. 6	1200	17,600	8.
Thomson-Houston, E. I	1250	13,200	5.8
Mather, 400 lights	1300	28,100	7.0
Edison, No. 8	1400	20,000	6.9
Thomson-Houston, C. I	1500	6,000	5.6

ing of the two shafts, may not be great. In the navies of Europe, the practice of direct connection is universal, the dynamo shaft being coupled to that of the engine. This calls, of course, for either a great reduction of the speed of the dynamo, or a corresponding increase of that of the engine. It is easy enough to procure an engine running 1,500 revolutions per minute, but it is a very different matter to find one which will govern satisfactorily at so high a speed. So far as I can ascertain there is no automatic engine manufactured in the United States capable of indicating 30 h. p. which is designed for a higher speed than four hundred. I have been informed, however, that some of the type now in the market could be modified so as to operate well at five hundred. I am not aware of any dynamo in the United States absorbing 30 h. p., which would yield its normal output at even the higher speed. It is much easier to reduce the speed of the dynamo while preserving its electrical output than to raise the speed of the engine. Admitting the desirability of direct connection on shipboard, the problem proposed is the best method of obtaining the same output in watts per pound, at speeds below 500, that are now commonly obtained between 1,000 and 1,500.

The following figures of European dynamos obtained in the same way as those already given for American machines, and probably equally accurate, will show how this problem has been met abroad:

It is necessary only to refer incidentally to a few of the methods by which these results have been obtained. The principal are the elimination of all iron not needed for the magnetic circuit of the dynamo, and the adoption of a type in which the circuit furnishes a framework of necessary rigidity. The magnet core should be of the best wrought iron, this single condition frequently reducing the weight twenty-five per cent. while preserving the output. Armatures of large diameter give high peripheral velocity at low speed, and this seems to recommend the Gramme ring, a large drum armature being cumbersome. The Gramme form has another advantage for ships' use, that it can be repaired or even re-wound with the facilities existing on shipboard, although I believe a Siemens winding has recently been perfected, which admits of equal facility of repairs. The use of multipolar machines contributes to lightness, and the Siemens and Halske machine referred to in the preceding table has four field magnets inside a Gramme ring. Flattened ring armatures and multipolar magnets also give large output for the weight.

Every ship, aboard which the electric light is a necessity, should have two similar dynamos, that either may be used

TABLE II.

DYNAMO.	Revolutions.	Watts in external circuits	Watts per pound.
Manchester, No. 6	350	9,000	3.6
Victoria, H. 3	350	36,000	9.7
Siemens & Halske	350	16,000	8.1
Edison-Hopkinson, 10 in. L	350	16,800	2.9
Manchester, No. 7	400	22,500	4.6
Victoria, F. 3	400	21,600	8.6
Siemens & Halske	400	20,000	10.2
Edison-Hopkinson, 15 in. S	420	39,600	3.4
Gramme, H. 2d 225	450	23,600	8.3
Elwell-Parker	450	50,000	5.6
Crompton $\frac{40}{110\ J.}$	460	45,100	6.7
Edison-Hopkinson, 8 in. L	525	15,400	3.3
Manchester, No. 5	525	6,500	4.7
Crompton, $\frac{22}{110\ J.}$	550	24,750	6.0
Manchester, No. 6 A	550	25,000	6.75
Edison-Hopkinson, 10 in. L	550	25,200	4.4
Victoria, D. 2 S	600	8,400	6.7
Gramme, H. I. c 200	600	14,000	6.4
Ganz	670	50,400	9.2
Crompton, $\frac{60}{110\ J.}$	675	66,000	9.8
Goolden-Trotter	765	16,000	6.2

at will. At present this precaution is not observed in the navy. The lighting of the ships by incandescent lamps is under the control of the bureau of navigation, and the installation for this purpose consists of an ordinary plant of an engine driving a dynamo by belting. The electric search lights, two of which are furnished to each large vessel, are supplied by the bureau of ordnance, the installation for this purpose consisting of a Brotherhood engine driving two "C" Gramme's connected direct on the same bed plate. In case of accident the incandescent dynamo will not work the search lights to advantage, nor will the Gramme's operate the incandescent lights well. This is of course most unsatisfactory, and the need of the service is for a dynamo which will perform either work well, and, if necessary, both at once. Our search lights require about fifty volts and fifty amperes for ordinary work, the current being sometimes increased to one hundred. The lamp is operated by hand in order to fully utilize the radiation from the crater of the positive carbon. The hand lamp and Mangin projector are in use in nearly every navy in the world, for projecting a condensed beam of light to a distance. Automatic lamps do not admit of continuous adjustments as readily as the hand lamp, and are not so thoroughly under the control of the operator. In any search lights the arc may sometimes fail, and it is sometimes advisable to cut the lights out without notice. Large and sudden variations of load are thus liable to occur, and these should not affect the dynamo. It is unquestionable that incandescent lights can be worked from a series dynamo, and search lights operated by a shunt machine, but most of these proceedings are make-shifts. It is undeniable that both search lights and incandescent lights can be worked satisfactorily by a compound dynamo. I have been called upon to work all these kinds of dynamos for each purpose, and the compound dynamo works incandescent lights as well as the shunt machine, and search lights better than does the series machine applied for the purpose. I have also worked two search lights and fifty incandescent lights simultaneously from one compound dynamo. Each search light had three-tenths of an ohm dead resistance in circuit to bring the difference of potential down to about fifty volts. There is nothing new in this, but I have so frequently been asked what advantage the compound dynamo possessed, that I have trespassed somewhat on

Digitized by Google

the time of the convention to give reasons for the opinion that all naval dynamos should be compound wound for a constant potential.

It is probable that many fine new vessels will require electric motors. Some of our gun carriages may be worked in this way, on account of the advantages that an electric motor offers in small weight and bulk, and in the important fact that it is so much easier to splice a broken main than to patch a leaky pipe when steam or compressed air is used for power. Electric motors will be useful for shell hoists and ammunition whips, reducing the number of men employed for these purposes. Here, also, light weight and compactness are absolutely essential, and nine-tenths of the motors in commercial use would be barred out as too heavy. A 10 h. p. motor, the largest we would probably use, should not weigh over five hundred pounds.

The potential at which the main should be kept, must be determined from the relative importance of the three uses to which our dynamos will be put. As we are not bothered by the question of long-distance transmission, we can well use a low potential for incandescent lights and motors, while search lights require only fifty volts, although it is advantageous with any dynamo to have a little dead resistance in the search light circuit. For these reasons I think seventy volts is about the best point for a compromise. This is the voltage used in the French navy, the English working at eighty. If two search lights can be successfully worked in series, the potential at the dynamo might advantageously be raised to one hundred and ten, or even one hundred and twenty volts. Experiments have been made to test this point, but it is not decided as yet. Should there, however, be any material advantages secured in the working of either incandescent lights or motors by the use of a high potential, the search lights could be operated with sufficient resistance to give them their proper potential.

The same requirements of small bulk and weight must control in the choice of engines. The adoption of a compound dynamo throws extra responsibility on the engine,

TABLE III.

DYNAMO.	Revolutions.	Watts in external circuits	Watts per sq. inch floor space.
Manchester, No. 6	350	9,000	4.9
Edison-Hopkinson, 10 in. L.	350	16,800	6.9
Manchester, No. 7	400	22,500	6.0
Edison-Hopkinson, 15 in. S.	420	39,600	9.1
Crompton, $\frac{40}{110\ J.}$	460	45,100	20.3
Edison-Hopkinson, 8 in. L	525	15,400	6.5
Manchester, No. 5	525	6,500	4.6
Ganz	670	50,400	20.9
Crompton, $\frac{60}{110\ J.}$	675	66,000	26.4
Edison, No. 20	800	50,000	8.8
Brush H 3	850	66,000	23.5
Westinghouse, No. 18	900	30,000	5.8
Hochhausen, No. 8	1000	35,200	15.0
Mather, 500 lights	1050	35,250	8.5
Weston, 6 W. I	1050	11,500	4.4
Brush G. 4	1050	28,300	17.7
Weston, 7 W. I	1100	20,125	5.4
Westinghouse, No. 12	1100	18,000	4.7
Brush F. 5	1100	19,000	15.3
Thomson-Houston H I	1150	25,600	9.0
Edison, No. 12	1200	30,000	7.7
Hochhausen. No. 6	1200	17,600	13.3
Thomson-Houston, E. I	1250	13,200	8.2
Mather, 400 lights	1300	28,100	7.3
Edison, No 8	1400	20,000	6.0
Thomson-Houston, C. I	1500	6,000	5.9

as without constant speed the advantages of the dynamo are not apparent. American automatic engines can easily meet this demand, but most of them are too heavy, rigidity of frame being secured by the use of unnecessarily large masses of cast-iron. One hundred pounds weight per indicated horse-power, with 80 lbs. steam, is a liberal allowance. In many European engines steel and phosphor-bronze have been largely used to obtain lightness.

It may be interesting to compare a few well known dynamos as to compactness, the comparison being made on watts of output per square inch of floor space.

The preceding show a general average of about forty pounds dead weight of dynamo and engine for each sixteen candle lamp, whether high or low speed dynamos are used. In the following special attention has been paid to the manufacture of light and compact apparatus:

As illustrating the advantages of direct connection in economy of floor space and also of weight when care is taken, I have a few statistics of ship installations.

TABLE IV.

PLANT.	Connection.	Total weight.	Floor space.	Weight per 16c. lps.	Sq. in. of floor space per 16c. lamps.
1-200 light Brush compound 1-8 in. Brotherhood engine	Direct.	5,500		27½	
Steam yacht "Restless." 1 Arnold dynamo (30 lights) 1 Vertical engine	Friction.	600	6 sq. ft.	20	29
1 Goolden-Trotter dynamo (75 lights). 1 Tower engine	Direct.	900	5¼	12	11
1 Victoria dynamo (60 lights) 1 Brotherhood engine	Direct. 765 revs.	800	4⅛	13	11
Italian cruiser "Dugali." 1 Parson's dynamo (150 lights) 1 Parson's steam turbine (8 plants like above.)	Direct. 9,000 revs.	900	6¼	6	6

It is noticeable abroad, that with the type of slow-speed dynamos established in the markets, the system of direct connection is adopted in many isolated plants on shore. The tendency throughout Europe is to reduce the speed of dynamos, preserving the electrical output by a careful study of details. Few recent machines built abroad are designed for higher speeds than 800, while an American

Digitized by Google

company, operating at and above 850 advertises slow speed as one of the advantages of its dynamos.

In this country the naval demand for slow-speed dynamos will be comparatively small, but if it serves to introduce the type into the market, I am satisfied from what has taken place in Europe that the system of direct connection will create a field for itself, as soon as the apparatus can be procured without the heavy expense attendant on special work. It recommends itself in any installation where either weight or floor space is be economized. I believe it can be successfully utilized in lighting railway trains, especially if, in the near future, railroad companies have to furnish steam for heating purposes. Plants could be furnished small steamers and yachts, in which a common installation could not find room.

TABLE V.

	Plant.	Connection.	Total weight.	Floor space.	Weight per 16c. lps.	Sq. in. of floor space per 16c. lamp.
U. S. Steamer "Chicago."	2 Edison No. 8 (200 lights) 2 Armington & Sims engine	Belting.	16,000		40	
U. S. Steamer "Boston."	1 Brush compound (150 lights) 1 Straight line engine	Belting.	10,400		70	
U. S. Steamer "Atlanta."	1 Weston 7 W. I. (150 lights) 1 Armington & Sims engine	Belting.	6,500	105 sq. ft.	43	101
Steam yacht "Alva."	1 Siemens compound (160 lights) 1 Willans' engine,	Direct. 450 revs.	6,700	27	43	24
French ironclad "Indomptable."	2 plants each 1 Multipolar Gramme (160 lights) 1 Vertical compound engine	Direct. 350 revs.	7,040	29	44	26
Torpedo station.	1 Brush No. 7 special (100 lights) 1 Westinghouse engine	Direct. 700 revs.	4,000	17	40	25
Torpedo station.	1 Weston No. 8 special (270 lights) 1 Westinghouse automatic,	Direct. 390 revs.	9,800	75	43	41

There are one or two other considerations governing ship installations. The principal is the absolute necessity of high insulation. The bureau of navigation has, in its recent contracts, called for an insulation resistance of 1000 megohms per nautical mile, after twenty-four hours immersion in salt water.

Lead covering is also required as a protection against mechanical injury. We are so exposed to short circuiting and corrosion from salt water that the high standard called for is most wise. All switches, junctions and safety boxes, and in fact all parts of the circuit, should be thoroughly insulated. Difficulty has been experienced from salt water running along the wires into lamp sockets, short circuiting the lamps. The insulation of the whole circuit is sometimes required to be at least 1000 ohms for each volt at the terminals of the dynamo.

STORAGE BATTERIES FOR ELECTRIC LOCOMOTION.[1]

BY A. RECKENZAUN.

THE idea of employing secondary batteries for propelling vehicles is almost contemporaneous with the discovery of this method of storing energy. To Mr. Planté, more than to any other investigator, much of our knowledge in this branch of electrical science is due. He was the first to take advantage of the action of secondary currents in voltaic batteries. Planté is a scientist of the first grade, and he is a wonderfully exact experimenter. He examined the whole question of polarization of electrodes, using all kinds of metal as electrodes and many different liquids as electrolytes, and during his endless researches he found that the greatest useful effect was produced when dilute sulphuric acid was electrolyzed between electrodes of metallic lead.

A set of Planté's original cells was exhibited for the first time, in March, 1860, before the Paris Academy of Sciences; scientists admired and praised it, but the general public knew nothing of this great discovery, thus brought to notice. Indeed, at that period little commercial value could be attached to such apparatus, since the accumulator had to be charged by means of primary batteries, and it was then well known that electrical energy, when produced by chemical means in voltaic cells, was far too expensive for any purpose outside the physical laboratory or the telegraph office.

It was twenty years after this exhibition at the Academy of Sciences, in Paris, that public attention was drawn to the importance of storage batteries, and that Mr. Faure conceived the idea of constructing plates, consisting of lead and oxides of lead. At that time the advantages accruing through a system of electrical storage could be fully appreciated, since electrical energy was already being produced by mechanical means through the medium of dynamo-electric machines.

It was the dynamo machine which created the demand for the storage battery, and the latter was introduced anew to the public at large and to the capitalist with great pomp and enthusiasm. One of Faure's accumulators was sent to Sir William Thomson, and this eminent scientist in the course of experiments ascertained that a single cell, weighing 165 lbs., can store two million foot-pounds of energy, or one horse-power for one hour, and that the loss of energy in charging did not exceed 15 per cent. These results appeared highly encouraging. There we had a method of storing that could give out the greater part of the energy put in. The immense development which the electric transmission of energy was even at that early day expected to undergo, pointed to the fact that a convenient method of receiving large quantities of transmitted energy, and of holding it in readiness until wanted, must be of the highest importance. Numerous applications of the Faure battery were at once suggested, and the public jumped to the conclusion that a thing for which so many uses could be instantly found must necessarily be a profitable investment, and plenty of money was provided forthwith, not with the idea of commencing careful experiments and developing the then crude invention, which would have been

1. Read before the National Electric Light Association, Boston, August 11, 1887.

Digitized by Google

the correct thing, but for manufacturing tons of accumulators in their first and immature form.

I need not describe the disappointments which followed the first unfulfilled hopes, nor repeat the criticism that was heaped upon the heads of the early promoters. Those early hopes were untimely and unreasonable. A thousand difficulties had to be overcome — scientific difficulties and manufacturing difficulties. This invention, like most others had to go through steady historical developments and evolution, and follow the recognized laws of nature, which are against abnormal and instantaneous maturity. The period of maturity has also been retarded by injudicious treatment, but the ultimate success was inevitable. Great advances have been made within the last few years, and I propose now to offer a few facts and figures relating to the present state of the subject with reference to the application of storage batteries to locomotive purposes. It is not within the province of this paper to discuss all the different inventions of secondary batteries, nor to offer any suggestions with regard to priority, therefore, I will confine myself to general statements. I am aware of the good work that was done in the United States by Kirchhof 26 years ago, and of the more recent work of Mr. Brush, of Cleveland, Mr. Julien, and others, but I am more particularly acquainted with the recent achievements of the Electrical Accumulator Company, who own the rights of the Electrical Power Storage Company, of London. I have used the batteries of the latter company for propelling electric boats and electric street cars. The first of the boats was the "Electricity," which was launched in September, 1882, and which attained a speed of seven miles an hour for six consecutive hours. Since then a dozen electric boats of various sizes have been fitted up and worked successfully by means of storage batteries and motors of my design. The most important of these were the launch "Volta," and another similar craft, which is used by the Italian government for torpedo work in the harbor of Spezzia. On the measured mile trial trips the Italian launch gave an average speed of 8.43 miles an hour with and against the tide. The hull of this vessel was built by Messrs. Yarrow and Co., and the motors were manufactured by Messrs. Stephens, Smith & Co., of London. The "Volta," which was entirely fitted by the latter firm, is 37 feet long and 7 feet beam. She draws 2 ft. 6 in. of water when carrying 40 persons, for whom there is ample sitting accommodation. There are 64 cells in this boat; these are placed as ballast under the floor, and actuate a pair of motors and a screw coupled direct to the armature shaft running at 700 revolutions a minute. We crossed the English channel with this boat in September of last year, leaving Dover at 10:40 in the morning, arriving at Calais at 2:30 P. M.; stayed about an hour in the French harbor for luncheon, and floated into Dover docks the same evening, at 6:30, with full speed. The actual distance traversed without entirely discharging the cells was 54 miles, the current remained constant at 28 amperes until 5 P. M., and it only dropped to 25 amperes at the completion of the double voyage between England and France. Several electric launches are now being constructed in London, and one in New York by the Electrical Accumulator Co.

Mr. Trouvé exhibited a small boat and a tricycle, both worked by Planté accumulators, at Paris, in 1881.

The first locomotive actuated by storage batteries was used at a bleaching works in France in 1882. During the same year I designed an electric street car for the Storage Company, and this was tried on the lines of the West Metropolitan Tramways in March, 1883. It had accommodation for 46 passengers. This car had many defects, and I reconstructed it entirely, and ran it afterwards in its improved form on the South London Tramways, and also on a private track at Millwall, where it is now in good condition, and I have a similar car in Berlin. M. Phillipart exhibited a car in Paris, and M. Julien made successful experiments in Brussels, Antwerp, and Hamburg. Mr. Elieson is running storage battery locomotives in London. Mr. Julien has also been experimenting with a car in New York, and I believe one is in course of construction for a line in the city of Boston. Messrs. W. Wharton, Jr. & Co. have a storage battery car running at Philadelphia on Spruce and Pine streets, and this energetic firm is now fitting up another car with two trucks, each carrying an independent motor, similar to my European cars.

I have mentioned all these facts in order to show that there is a considerable amount of activity displayed in the matter of storage batteries for street cars, and that continued and substantial progress is being made in each successive case. The prejudices against the application of secondary batteries are being rapidly dispelled, and there are indications everywhere that this method of propulsion will soon take a recognized place among the great transit facilities in the United States. I feel convinced that this country will also in this respect be far ahead of Europe before another year has passed over our heads

There are several popular, and I may say, serious objections to the employment of storage batteries for propelling street cars; these objections I will now enumerate and endeavor to show how far they are true, and in what measure they interfere with the economical side of the question.

First objection: The loss of energy, which amounts in practice to 20, and sometimes 30 per cent. Now, every method of storing or transmitting energy involves some waste, but in saying this we need not condemn the system, for after all the term efficiency is only a relative one. For instance, a 10 h. p. steam engine consumes three times as much fuel per horse-power hour as a 1,000 horse-power engine does, yet this small engine must be, and is regarded as, one of the most economical labor saving appliances known to us. Considered as a heat engine the efficiency of the most economical steam motor is but 10 per cent.—90 per cent. of the available units of heat contained in coal being lost during its transformation into mechanical energy. Thus, if we find that the storage battery does not return more than 70 per cent. of the work expended in charging it, we ought not to condemn it on that account until we have ascertained whether this low efficiency renders the system unfit for any or all commercial purposes. It is needless to go into figures in order to show that, when compared with animal power, this objection drops into insignificance.

The second, more formidable objection, relates to the weight of storage batteries—and this involves two disadvantages, viz.—waste of power in propelling the accumulator along with the car, and increased pressure upon the street rails, which are only fitted to carry a maximum of 5 tons distributed over 4 points, so that each wheel of an ordinary car produees a pressure of 1¼ tons upon a point of the rail immediately under it.

The last mentioned objection is easily overcome by distributing the weight of the car with its electrical apparatus over 8 wheels or 2 small trucks, whereby the pressure per unit of section on the rails is reduced to a minimum. With regard to the weight of the storage batteries, relatively to the amount of energy the same are capable of holding and transmitting, I beg to offer a few practical figures. Theoretically, the energy manifested in the separation of one pound of lead from its oxide is equivalent to 360,000 foot pounds, but these chemical equivalents, though interesting in themselves, give us no tangible idea of the actual capacity of a battery.

Repeated experiments have shown me that the capacity of a secondary battery cell varies with the rate at which it is charged and discharged. For instance, a cell such as we use on street cars gave a useful capacity of 137.3 ampere hours when discharged at the average rate of 45.76 amperes, and this same cell yielded 156.38 ampere hours when worked at the rate of 22.34 amperes. At the commencement of the discharge the E.M.F. of the battery

Digitized by Google

was 2.1 volts, and this was allowed to drop to 1.87 volts when the experiment was concluded. The entire active material contained in the plates of one cell weighed 11.5 lbs., therefore the energy given off per pound of active substance at the above high rate of discharge was 62,225 foot pounds, and when discharging at the lower rate of 22.34 amperes the available useful energy was 72,313 foot pounds, or nearly 2.2 electrical horse-power per pound of active matter. But this active substance has to be supported, and the strength or weight of the support has to be made sufficiently great to give the plate a definite strength and durability. The support of the plates, inclusive of the terminals above referred to, weighs more than the active material, which consists of peroxide of lead and spongy lead; so that the plates of one cell weigh actually 26.5 pounds; add to this the weight of the receptacle and acid, and you get a total of about 41 pounds per cell when in working order. Seventy of these cells will propel an ordinary street car for four hours and a half, while consuming the stored energy at the rate of 30 amperes, or over 5.6 electrical horse-power. The whole set of seventy cells weighs 2,870 lbs., which is barely one-fifth of the entire weight of the car when it carries forty adult passengers, therefore the energy wasted in propelling the accumulator along with a car does not amount to more than 20 per cent. of the total power, and this we can easily afford to lose so long as animal power is our only competitor. From numerous and exhaustive tests with accumulators on cars in this country and abroad, I have come to the conclusion that the motive power for hauling a full sized street car for fifteen hours a day does not exceed $1.75, and this includes fuel, water, oil, attendance, and repairs to engine, boiler and dynamo. We have thus an immense margin left between the cost of electric traction and horse traction; and the last objection, that relating to the depreciation of the battery plates, can be most liberally met, and yet leave ample profits over the old method of propulsion by means of animals.

The advantages of storage battery street cars for city traffic are self-evident, so that I need not trouble you with further details in this respect, but I would beg those who take an interest in the progress of the electric locomotive to give this subject all the consideration it deserves, and I would assure them that the system which I have advocated in this brief but very incomplete sketch is worthy of an extended trial, and ready for the purposes set forth. There is no reason why those connected with electric lighting interests in the various cities and towns should not give the matter their special attention, as they are the best informed on electrical engineering and already have a local control of the supply of current needed for charging.

THE PRESENT STATUS OF THE STORAGE BATTERY.[1]

BY C. O. MAILLOUX.

In one of his masterly newspaper interviews, a well-known American electrician once said of the storage battery that it was chiefly remarkable for its power of stimulating the propensity for lying which is inherent in some natures. This sweeping assertion naturally makes me realize very fully the possible risk of compromising my reputation which I run in undertaking to make a few observations relative to the storage battery.

Under the circumstances an apology might seem to you to be a suitable preface, but I trust that a simple explanation will suffice to dispel all doubts on your part as to my good faith in the premises. This explanation rests upon the fact that the storage battery, like the dynamo, the arc lamp, the incandescent lamp, and many another thing, has grown and progressed. Only a year ago I would have hesitated, perhaps refused, to say anything before you in favor of the storage battery. My reason would not have been a lack of confidence, but rather a feeling that the era of the storage battery was not yet at hand. I felt that this youthful offspring of the great and powerful family of electrical applications promised to play as important an industrial role as any of its colleagues, but I also knew that it had already made one debut some years ago and failed to draw, because it was too young. I would have been sorry to see its chances of success forever spoiled by a second premature attempt. The child seems, however, to have now had sufficient time to mature and perfect its training, and after an interval of some five years it has reappeared upon the scene, this time with a fair and encouraging success. Within a few months there has been in America a great revival of interest in the storage battery, as you are aware. Many of us practical men, who were once disposed to be skeptical, begin to regain confidence. Certainly the applications which have been made of the storage battery in this brief period prove beyond dispute that this time the storage battery is coming to stay. In some cases it found a new and profitable field waiting for it, as for instance in railroad car lighting. In many other cases it opened an entirely new range of possibilities by its playing a secondary role. In a word, it has a wide sphere of usefulness to cover, through many devious paths, some of which it alone can tread over, and many of which it will compass with the help of other applications of electricity. It does not presume to fill all these parts at once. In the case of some of them it may prove wise to permit the process of evolution to go on for some time to come, before they are considered.

It is not necessary, however, for the storage battery to wait until it can accomplish *everything* before accomplishing *something*. There are many applications where it is now entirely competent to give satisfactory results; and while doing what it is at present capable of, it can learn what it does not know. The dynamo was not at first what it is now, nor was the lamp, nor indeed were the details of lighting systems. Electric lighting was limited at first to isolated installations. The range of adaptability compared with what it now is, was limited greatly. It was necessary to confine the applications of the light to isolated cases of fitness, since the apparatus was too limited in every respect to admit of doing more. But while we were doing what lighting could be done with these facilities—and making money too, even then—we were learning to do more. Invention, and the yet greater force, evolution, were hard at work to give us better ideas and more practical devices. In time came the central station, such as it was—and I might emphasize the *such*. Many are here present, doubtless, who were operating these pioneer arc light stations, with long rows of dummy lamps, to be shifted in or out of circuit for the purpose of balancing the work in the circuit itself. Then came the current regulator, and, following in its wake, a succession of devices and improvements, of methods, of systems. The evolution of the incandescent light is also of equal interest, and from the useless platinum wire lamp to the very useful alternating system of to-day, the steps are so numerous and strange that the mind finds itself in a regular museum in attempting to retrace them. I need not tell you that the evolution of the electric light is not complete. The very existence of our organization proves that, since our object is to promote and further the process of development. Each year we have found electric lighting advancing a few steps. Ten years from to-day we may have made so many of these steps that our present systems may seem obsolete, yet these very systems in their time were good enough to earn dividends with. This is precisely the case with the storage battery. Its application can even now play a brilliant part in electric lighting, but it can be very useful even if intrusted with a more modest part. In a word, it has arrived at that age and condition of development which fit

1. Read before the National Electric Light Association Boston, August 11, 1887.

Digitized by Google

it to enter the active service of civilization and begin the race for promotion. If I may judge by the very favorable attention which the storage battery has received from the public, and particularly from those who are dispensing electricity to the public, I think I can venture, like our very genial friend and learned colleague, Dr. O. A. Moses, to prophesy that the storage battery is going to be the next great step of progress. It has already taken its place in line, and I believe it will speak for itself inside of a year.

With regard to the storage battery itself, it may be said that in following its development since the days of Planté one meets with an already large and interesting collection of ideas and devices. It is outside of the scope of the present paper to enter into the study of the steps by which the art has arrived at the present stage. The number of patents relating to storage batteries in this country and in Europe is already quite large; nevertheless the number of good storage batteries is exceedingly small. In this respect history repeats itself. The large and constantly increasing number of patents on dynamos, lamps, regulators, converters, and what not, when contrasted with the small number of those inventions which are really useful, suggests that a large proportion of inventors must have been engaged too deeply in taking out patents, and pay altogether too little attention to the work of reducing their inventions to practice. Passing by the history of the secondary battery and the theories of its action, which properly have no place in a paper like this, it might be of interest to dwell briefly on the objections urged against the storage battery. The two chief objections are limited life or durability and low economy. I shall frankly admit at the start that in many cases these objections are sufficiently valid to throw the storage battery out of competition. The final commercial test of the storage battery, however, is the prospect of gain which it offers under the circumstances of any given case. Viewed in this light, the above objections to the storage battery lose some of their force. I can cite as an example the case of a Philadelphia hotel which it is proposed to light by electricity. A practical electric light man, who has been engaged in the business of establishing and operating central station plants ever since the beginning of electric lighting, went over the case very carefully and came to the conclusion that the storage battery would be preferable. So well satisfied is he of the fitness of the storage battery that he submitted detailed propositions for furnishing light. The present cost of lighting the hotel by gas is $7,500 per annum. For the sum of $6,500 per annum, this practical man is willing to assume the responsibility of furnishing light for a term of years. Being a careful and shrewd business man he has made a wide allowance in his calculation. He does not count upon the two years' guaranteed life of the battery plates, but assumes a necessity for their entire renewal in one year. He calculates, nevertheless, to make 15 per cent. on his investment, and I may say that he seldom makes mistakes in his ventures. In this case, the fact that light must be on "tap" for every moment of the 24 hours becomes an important consideration, and the evident advantages of the storage battery outweigh the questions of durability and economy. Now, taking up the question of durability by itself, I may say that it is greatly dependent not only upon the kind of battery, but even upon the use to which it is put.

Then perhaps one may neglect to put in more than the quantity necessary for a normal capacity. The result is that the battery is not fully charged, and to furnish the usual capacity it must be discharged by drawing upon its residual charge. He soon finds his battery giving symptoms of disease, and in a short time both the positive and negative plates will require doctoring.

It must be said, however, that improper care is not solely responsible for all the troubles that affect the life of the storage battery, Some difficulties, like the scaling off of the active matter, the buckling and stretching of plates, are largely inherent in the battery. They are natural consequences of the manner or method of making the battery. So it may be said here that the storage battery has a personal equation depending on the make, the care, skill and knowledge of the maker. This amounts to saying that some kinds of storage battery are more troublesome to keep in order than others.

The life of the storage battery plate must not be regarded as doomed to remain compassed within the term of a couple or three years. The limit is gradually being extended, and it may be said that each succeeding batch of the product of a factory is slightly better than the preceding. The same may be said of the cost, which, of course, is an important consideration, in view of the necessity for repairs or perhaps renewals at certain intervals. The cost of manufacture has been reduced 30 per cent. inside of one year, and it is even expected that it will be brought down to 50 per cent. before the year is up. The prices have not been reduced because the demand is great even as it is. This of itself shows that the storage battery has already a good field of usefulness, where it can command to a great extent its own price.

The weight of the battery is another of the objections to be met, particularly for street cars. This objection is one which is of particular rather than of general application. It depends on the battery. We know, however, practically, that with 27 lbs. of active matter, it is possible to provide a supply of energy for 6 lamp-hours or over 10 watt hours per pound of matter. This result will no doubt be improved upon greatly.

Last but not least among the objections used against the storage battery is that of reduced economy. My esteemed friend and colleague, Mr. Anthony Reckenzaun, whom you will have the honor of hearing after me, will give you very clear and precise information on this question of economy, more particularly as regards the use of storage batteries for power. I will leave this portion of the subject to him because I know he is a most competent authority. I will permit myself also to commend his very intelligent work in Europe during the last five years in the application of accumulators to electrical traction and propulson.

The question of economy considered in relation to the storage battery does not present such difficulties as might at first be supposed. Considered as an apparatus for transforming energy for electric lighting by incandescence, the storage battery has an efficiency so much below that of the dynamo, or the transformer, that it cannot hope to enter into direct competition with these in many cases. Of the electrical energy produced by the charging dynamo, probably not more than from 65 to 70 per cent. finds its way into the lamps. With direct lighting, as we know, we may obtain as much as 90 per cent. But just here there is a question of great interest and importance which arises, namely: the proportion of energy appearing in the lamp as light. In an incandescent lamp probably not five per cent. of the energy expended is utilized as light. This five per cent. of rays represents the proportion of heat rays which are visible. The other rays are invisible. Now it is also well known that this very proportion of the useful light-giving heat increases with the absolute temperature of the filament. This means that the higher we raise the incandescence of the filament, the more light it gives for a given amount of electrical energy. But when the filament is brought to an excessive temperature its life is not so great. Just here I will note the fact stated by authorities, that alternating currents have been found to increase the life of the filament as compared with continuous current. Now I can supplement this with the statement that the storage battery current gives yet much longer life to the lamp. It permits the raising of the filament to a higher degree of temperature, and consequently it leads to a gain in the economy of energy.

Digitized by Google

We have found in practice that we can obtain the same average life of 600 hours with a lamp of 2½ watts per candle-power, while direct currents would require lamps of 3½ to 4 watts per candle-power. In our early work, realizing the great disadvantage at which we are placed, we resorted to the use of lamps of higher economy, so called. The makers of these lamps refused absolutely to give any kind of life guarantee. They were themselves yet more surprised than we to learn of the remarkably long endurance of these lamps, even on board cars, where the filament is subjected to the wearing effect of mechanical vibration.

Of course I cannot pretend to say what is the cause of this increased life of lamps with the storage battery current. It is probably related in some manner to the fact that the current of a storage battery is continuous in the strict sense of the term, while the current of dynamos and transformers is wavy in character.

It would seem, therefore, that so far as electric lighting by incandescence is concerned, while the storage battery is open to the objection of wasting at the spigot, it can claim some saving at the bung-hole, which quite nearly equalizes the difference between the results obtained by the direct and the storage method. Taking our 65 per cent. of energy, or in round numbers 485 watts, we can obtain twelve lights per electrical horse-power of 746 watts produced in the dynamo, using lamps of 51 watts, which is the most economical yet heard of with a continuous current, we have the following results: Out of 746 watts, taking 90 per cent. as available at the lamps, which is a liberal proportion, we have 671 watts, or less than 12 lamps of 51 watts. If we consider the fact that in practice, lamps of 60 to 70 watts per 16 candle-power are the rule, the difference would be yet greater in favor of the storage battery. Taking another view of the question, we can calculate what is the lowest per cent. of efficiency permissible in the storage battery.

Taking 11 lamps as the result of the direct application from the dynamo, we find that the storage battery must, at 40 watts per lamp, supply 440 watt hours out of each 746 watt hours given to it, or somewhat less than 59 per cent.

I need not dwell at length upon the uses of the storage battery and the services which it can render in connection with electric light plants, for these are quite generally understood, and new ones suggest themselves all the time. The present rate of demand shows that the uses are at least equal to the rate of supply and sometimes in excess. One application of special interest in this connection, however, is that in connection with incandescent lighting, both from isolated and central station plants, the incandescent light is growing in favor so rapidly that where it is already in use for a certain number of hours during the evening, there is an objection to the use of gas at other times. In small installations it would evidently not pay to run constantly for a few lights. The storage battery would here be very useful, if not indispensable, and a number of local companies who could sell electricity for power in limited amount are also turning to the storage battery. Since they are compelled to run during the day to supply electricity for a few lamps and motors they find it would be as well to run to full capacity, using the balance of power to charge storage batteries from which the energy can be drawn later in the evening, to supply incandescent lamps.

In conclusion, I hope I have succeeded in making a fair presentation of the storage battery case, so far as it concerns the uses and purposes of electric light men. As I have intimated, the storage battery is as far from being perfect as were the first dynamos with which some of the enterprising men of this very body first paved the way to the great industry that now interests so many minds and enlists so much capital. But it is so far perfect, however, that it is ready to help enlarge this great industry to push further ahead in its wonderful development.

A SIMPLIFICATION OF THE NEW WEATHER SIGNAL CODE[1].

BY PROF. EDWIN J. HOUSTON.

In the new code of weather signal flags recently adopted by the United States Weather Bureau, approaching changes in the weather, as is well known, are indicated as follows, viz.:

The triangular black temperature flag indicates, by its position above or below the clear weather (a white square flag) or the precipitation flag (a blue square flag), a higher or lower temperature, respectively; thus, figure 1, indicates clear weather, higher temperature; while figure 2, clear weather, lower temperature; figure 3, rain or snow, with higher temperature; figure 4, rain or snow, with lower temperature. The cold-wave flag, figure 5, a square black centre on a white ground, is displayed whenever a

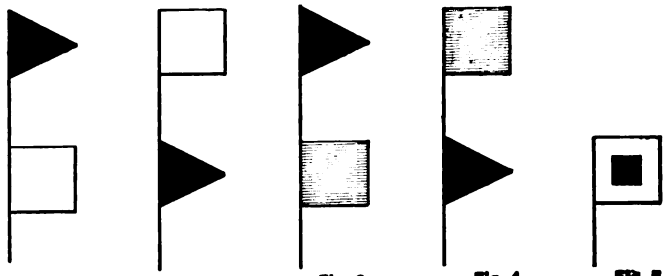

Fig. 1 Fig. 2 Fig. 3 Fig. 4 Fig. 5

decided fall in temperature is indicated. It is usually displayed at least twenty-four hours before the fall in temperature is expected to come.

The cold-wave flag, of course, is never displayed along with the temperature flag. The other three flags, however, may be displayed simultaneously. In this case, when displayed from poles, the indications of the upper flag are to be taken first. When displayed horizontally (see figure 6), the left-hand flag is to be taken first, indicating rain or snow, followed by fair but colder weather.

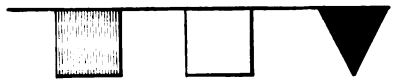

Fig. 6

The author proposes a simple modification of the above code, which, while it will do away with the cold-wave flag entirely, will, nevertheless, permit the indications both of a cold and a hot-wave when it is so desired.

This modification is, briefly, as follows: while the triangular temperature flag is employed as before to indicate warmer or colder weather, respectively, according to its position above or below the clear weather, or the precipitation flag, the extent of the change towards heat or cold is indicated by the distance it is placed above or below these flags.

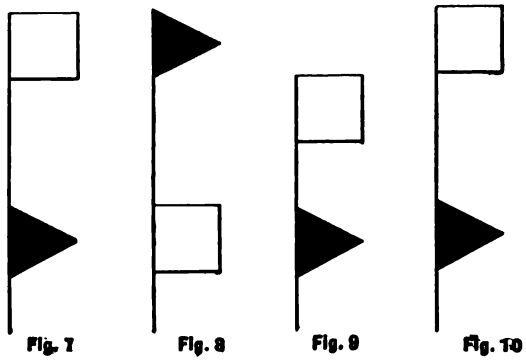

Fig. 7 Fig. 8 Fig. 9 Fig. 10

1. Abstract of Remarks made at the Stated Meeting of the Franklin Institute, held Wednesday, May 18th, 1887.

Digitized by Google

According to the code as now employed, the separate flags are displayed separated from one another a distance equal to once their diameter. In the code as modified, it is proposed to do away with the cold-wave flag and replace it by the triangular temperature flag displayed below the clear weather or the precipitation flag, a distance equal to at least twice the diameter of any of the separate flags. Thus, figure 7, indicates clear weather; cold wave.

In the same way the triangular temperature flags, when displayed above the other flags, at a distance equal to at least twice the diameter of a single flag, indicates an approaching hot wave. Thus, figure 8, indicates clear weather; hot wave.

Since the poles or horizontal supports for the signal flags, as now employed, provide sufficient space for the simultaneous display of three flags, no difficulty will be experienced in obtaining the distance of twice the diameter of a single flag as required by the proposed modification.

No difficulty need be anticipated in distinguishing between the lower temperature indicated, and that of a cold wave as indicated in the two flags (figures 9, 10), since whatever the distance of the observer, the apparent size of the flags will always readily permit a ready decision as to whether they are at a greater distance apart than once their diameter.

It is evident that, when so desired, the severity of the hot or the cold wave can be indicated by displaying the temperature flag a distance above or below the other flags greater than twice their diameter. Or, should such refinement become desirable, distances equal or proportional to the diameter of a single flag might be marked off on the support, to indicate differences of 5°, 10°, or 20°.

The author believes that the excellent code now in use would be greatly improved and simplified by the modifications he proposes.

CENTRAL HIGH SCHOOL,
Philadelphia, June 24th, 1887.

DYNAMIC ELECTRICITY.

BY CARL HERING.

(Continued from page 308.)

CHAPTER VIII.—FIELD MAGNET COILS.—(CONTINUED.)

SERIES MACHINES.

FOR the purpose of calculating the coils for the magnets, a series machine may be regarded as a separately excited machine whose exciter has a fixed, definite current and a potential which may be made as great as is required for the coils. Most of what was said above regarding separately excited machines in general, and this class in particular, applies, therefore, to series machines as well.

In making the test with temporary coils for determining the required ampere-turns, the magnets should be excited until the armature generates, not only the current and potential required for the external circuit, but in addition that which will be required by the magnets of the finished machine. This additional energy can readily be determined prior to testing the machine, it being a certain definite proportion of the whole output, as described above, depending on the size and desired efficiency of the machine. In a series machine the main current passes through the magnet coils, a certain amount of potential will therefore be absorbed in the coils; in making the preliminary test for determining the ampere-turns, the armature should therefore be made to generate this additional potential by increasing the excitation of the temporary coils. For instance, if the external circuit requires 1,000 volts. and 10 amperes, and if 5% of the energy be allowed for the magnets, the exciting with temporary magnets should be continued until the potential at the brushes is 1,000 + 5% = 1,050 volts. when the current is 10 amperes.

The number of turns, being the quotient of the ampere-turns and the current, is readily determined. The diameter of the wire is then calculated, as described from the limiting conditions, namely, the limited coil space, the heating, the desired efficiency and the cost of the wire. In shunt magnets certain values of the diameter of the wire would make it impossible to generate the required ampere-turns, and it is therefore necessary to guard against this in such cases by careful calculations and by assuming a comparatively large factor of safety in the allowable resistance or potential; but in series machines the whole current must pass through the magnets, no matter what the size of wire; therefore such impossible cases do not occur, and these precautions are therefore not as necessary, while the factor of safety may either be omitted altogether or taken much smaller than in shunt machines, the latter being preferable as it is always more satisfactory to the constructor to find the final results to be inside of the limit placed than beyond it. If for any reason the diameter of the wire has been taken smaller than it should be it will merely decrease the efficiency of the machine and increase the heating, but it will not prevent the machine from being used for generating the required output as would be the case in shunt machines.

The most important quantity to allow for in the factor of safety is probably the self-induction in the magnet coils, which acts to increase their apparent resistance. It is a question, however, whether this absorbs energy as a dead resistance would, or whether it acts more like a spring or a cushion, in which case no allowance in the factor of safety is necessary. With the usual solid iron cores it is probable that it acts like both. Its value depends on a number of quantities, such as the number of windings, the current, the number of armature coils, the speed of rotation of the armature and the nature of the iron cores; for ordinary machines 5 to 10% of the potential lost in the magnet coils will probably be a sufficient factor of safety to cover all contingencies in series machines.

As it is impossible to calculate such a complex machine as a dynamo with the same accuracy as is attainable in simpler apparatus, it may be found upon testing the finished machine that its output differs slightly from what was required. If the test described above for the empirical determination of the required ampere-turns has been made, almost all the errors and indefinite or indeterminate factors which enter into the calculation of a dynamo, have thereby been eliminated, as the chief elements of error occur in the calculation of the magnetism, (which depends, among other things, on the quality of the iron, on the relation of the ampere-turns to the magnetism induced, and on the magnetic leakage), also in the calculation of the induction in the armature, in the self-induction, and in the adjustment of the brushes to the position of least sparking. These chief causes of inaccuracy having been eliminated by the test for the ampere-turns, any differences which may be found to exist after the machine is completed, should be inappreciable or at least very small.

If it is desired to correct such differences, and if there is no regulator attached to the machine by which this can be done, the speed may be altered accordingly. To determine this correction for series machines, run the finished dynamo and adjust the resistance in the external circuit until the current is the required strength after the machine has been running with full load for a number of hours and has attained its highest temperature. Measure its speed, S, and the potential V, at the binding posts when thus running, then if the required potential is V^1, the speed at which it should be run, to correct for this potential, is

$$\frac{S\,V^1}{V}.$$

(To be continued.)

Digitized by Google

ABSTRACTS AND EXTRACTS.

A CURIOUS THERMO-MAGNETIC MOTOR.

BY PROFS. EDWIN J. HOUSTON AND ELIHU THOMSON.

DURING investigations by the authors, concerning the increase in the coercitive force of steel by changes of temperature, the following curious thermo-magnetic motor was devised. This motor, though devoid of practical value, will, no doubt, be of sufficient scientific interest to warrant a short description.

In the figure, a disc or ring of thin steel, D, is mounted on an axis, so as to be quite free to move. The edges of the wheel are placed opposite the poles N and S, of a magnet. In this position, the wheel of course, becomes magnetized by induction.

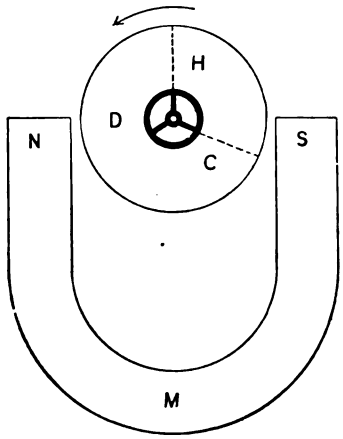

If now, any section of the wheel, as H, be sufficiently heated, the disc will move in the direction of the arrow. The cause of this motion is as follows: The section H, when heated, has its coercitive force thereby increased, and being less powerfully magnetized by the induction of the pole s than the portion C, immediately adjacent to it, the attraction exerted by the pole s on the latter portion is thereby sufficient to cause a movement of the disc in the direction shown by the arrow. If a constant source of heat be placed at H, a slow rotation in the direction shown is maintained.

To insure success, the disc must be sufficiently thin as to prevent its acquiring a uniform temperature. If the source of heat be at the same time applied at diametrically opposite portions of the disc, as at H and D, adjacent to the poles, the same effect will be produced. Since the amount of heat expanded in producing motion of the disc is so enormous when compared with the force developed, it will be readily understood that this motor is of no value as such, but must be regarded as an interesting example of the interconvertibility of force.—*Journal of the Franklin Institute*, January, 1879, p. 39.

EDISON'S PYRO-MAGNETIC GENERATOR.[1]

As a heat engine, the thermo-cell appears to follow precisely the law of Carnot, and hence can have at the most no higher efficiency than the reversible engine of this eminent philosopher. If, therefore, the result hoped for is to be attained at all, it must be looked for in some other direction. It has long been known that the magnetism of the magnetic metals, and especially of iron, cobalt, and nickel, is markedly affected by heat. Since, whenever a magnetic field varies in strength in the vicinity of a conductor, a current is generated in that conductor, it occurred to me that, by placing an iron core in a magnetic circuit and by varying the magnetizability of that core by varying its temperature, it would be possible to generate a current in a coil of wire surrounding this core. This idea constituted the essential feature of the new generator, which, therefore, I have called a pyro-magnetic generator of electricity.

1. Abstract of paper read before the American Association for the Advancement of Science, New York, August 15, 1887, by Prof. G. F. Barker, from Mr. T. A. Edison.

The principle of utilizing the variation of magnetizability by heat as the basis of electric machines, though clearly applicable to generators, was first applied to the construction of a simple form of heat-engine, which I have called a pyro-magnetic motor. A description of this motor will help us to understand the generator subsequently constructed. Suppose a permanent magnet, having a bundle of small tubes made of thin iron placed between its poles, and capable of rotation about an axis perpendicular to the plane of the magnet, after the fashion of an armature. Suppose, further, that by suitable means, such as a blast or a draught, hot air can be made to pass through these tubes so as to raise them to redness. Suppose it by a flat screen, symmetrically placed across the face of this bundle of tubes and covering one half of them, access of the heated air to the tubes beneath it is prevented. Then it follows that if this screen be so adjusted that its ends are equidistant from the two legs of the magnet, the bundle of tubes will not rotate about the axis, since the cooler and magnetic portions of the tube-bundle (that is, those beneath the screen) will be equidistant from the poles and will be equally attracted on the two sides. But if the screen be turned about the axis of rotation, so that one of its ends is nearer one of the poles and the other nearer the other, then rotation of the bundle will ensue, since the portion under the screen, which is cooler, and therefore magnetizable, is continually more strongly attracted than the other and heated portions.

This device acts, therefore, as a pyro-magnetic motor, the heat now passing through the tubes in such a way as to produce a dissymmetry in the lines of force of the iron field, the rotation being due to the effort to make these symmetrical. The guard plate in this case has an action analogous to that of the commutator in an ordinary armature. The first experimental motor constructed on this principle was heated by means of two small Bunsen burners, arranged with an air-blast, and it developed about 700 foot-pounds per minute. A second and larger motor is now about finished, which will weigh nearly 1,500 pounds, and it is expected to develop about 3 h. p. In both these machines electro-magnets are used in place of permanent magnets, the current to energize them being derived from an external source. In the latter machine the air for the combustion is first forced through the tubes to aid in cooling them and then goes into the furnace at a high temperature.

The generator consists of eight electro magnets, radially arranged around poles, connected with two discs of iron, through which pass, opposite these poles, eight rolls of thin corrugated wire. When the magnets are charged, these rolls are magnetized, and the current is generated in the coils. The apparatus being placed on a furnace, and hot air passing through these rolls, called interstitial armatures, they become non-magnetic by heat. Beneath the lower disc a semi-circular plate is made to revolve, so that it cuts off heat from one-half the armatures, four being heated and four cooled continually. The current of electricity being generated in them all, the direction in the four under the guard plate is opposite to that of the four without. The separate coils are then so connected that the currents so generated are given a common direction by a commutating device.

The entire machine now described is placed upon the top of any suitable furnace, fed by a blast, so that the products of combustion are forced up through those interstitial armatures which are not covered by the guard plate, and raise them to a high temperature. The field magnets, when charged, magnetize, of course, only those interstitial armatures which are cold; that is, those beneath the guard plate. On rotating this plate, the interstitial armatures are successively uncovered on the one side and covered on the other; so that continually during the motion four of the eight armatures are losing heat and the other four are gaining heat. But those which are losing heat are gaining magnetism, and vice versa.

The potential difference developed by this dynamo will obviously depend (1) upon the number of turns of wire on the armature coils, (2) upon the temperature difference in working, (3) upon the rate of temperature variation, and (4) upon the proximity of the maximum point of effect. No advantage will be gained, of course, by raising the temperature of the interstitial armature above the point at which its magnetizability is practically zero; nor will it be advantageous, on the other hand, to cool it below the point where its magnetism is practically a maximum. The points of temperature, therefore, between which, for any given magnetic metal, it is most desirable to work, can easily be determined by an inspection of the curve showing the relations between heat and magnetism for this particular metal.

The results thus far obtained lead to the conclusion that the economy of production of electric energy from fuel by the pyro-magnetic dynamo will be at least equal to, and probably greater than, that of any of the methods in present use. But the actual output of the dynamo will be less than that of an ordinary dynamo of the same weight. To furnish 30 16-candle lights in a dwelling house would probably require a pyro-magnetic generator weighing 2 or 3 tons. Since, however, the new dynamo will not interfere with using the excess of energy of the coal for warming the house itself, and since there is no attendance required to keep it running, there would seem to be already a large field of useful-

Digitized by Google

ness for it. Moreover, by using the regenerative principle in connection with it, great improvement may be made in its capacity, and its practical utility may very probably equal the interesting scientific principles which it embodies.—*Electrical World.*

CORRESPONDENCE.

NEW YORK AND VICINITY.

Electric Railways in New York.—Subway Work Down-Town.—Railroad Accidents and Electrically Actuated Brakes.—Necessity for Thorough Work in Electrical Engineering.—New Jersey Electric Railway Notes.

WHERE can I go in this vicinity to see an electric railway in operation, was the very natural question propounded by a civil engineer a few days ago. The gentleman thus accosted, who was considered pretty well posted in such matters, hesitated a moment, and finally replied that he could not positively name one nearer than Baltimore, although various experiments had been made on the elevated and surface railroads in this city. Some of these may be in operation, but the chances are that a visitor would find the car laid up for good reasons, and with all our agitation of this subject during the past three years there appears to be nothing for us to show. For this reason, every person having faith in the future of electrical transportation should hope for the success of Mr. Stephen D. Field's motor, which has just been placed on the 34th street branch of the 3rd avenue elevated railroad. Mr. Field has given this problem conscientious study, and was one of its earliest investigators since the advent of the successful dynamo. If there are any further obstacles to overcome he will strive to remove them; and his skill and ingenuity have already produced an electric locomotive which has at least the most business-like appearance of any yet brought out.

Down-town people are now being given an opportunity to inspect contractor Crimmins's "Subway Works," as the inscription on his new tool boxes designates the holes in the ground which are creeping up Broadway from Courtlandt street. The character of the work is the same as the conduit on Broadway above 14th street, and it starts from the new telephone building with 104 iron ducts, each 2½ inches in diameter. The disturbance of the soil has not given rise to such a variety of odors as characterized the up-town work, but the opening of Broadway at one of its busiest sections is quite an obstruction to traffic.

Recent railroad accidents in various parts of the country have attracted attention to the occasional failure of air brakes, and the use of electricity in combination with them will doubtless be considered of more importance now that practical tests have demonstrated its usefulness. Nothing that can be devised, however, should permit the slightest relaxation of vigilance in the care of passenger trains. An occasional unexpected call for brakes might be profitably indulged in for the sake of proving that brakemen understand the signal. There is an existing impression among all classes, that occasional failure is a weakness of electrical devices, but experience will show that careful construction and intelligent supervision will lead to the same reliability with the electric current as is popularly supposed to prevail in the use of steam, water, air or gas,

Temporary and careless work has been too prevalent a feature of electrical engineering, and now that the safety of life and property depends upon this new profession to such a great extent, every precaution should be used to raise the standard of construction.

There are some electric railway rumblings from various parts of New Jersey, which may settle down to the hum of business before winter sets in. The triangular fight for a franchise in Elizabeth has not yet ended; but the authorities in New Brunswick have granted permission to the street railway to use electricity if the property holders are willing. The Jersey City and Bergen horse railway continues its experimental trips with a storage battery car. The sea-shore railway at Asbury Park has received its first daft motor, and the indications are that the line will be ready for business by the first of September, rather too late, however, to avail itself of the summer traffic.

NEW YORK, Aug. 3, 1887.

PHILADELPHIA.

Comprehensive Plans of the City Authorities for Electric Lighting.—The Electric Railway Experiments of Messrs. Wm. Wharton, Jr. & Co.—Gathering of "Old Time" Telegraphers in Philadelphia.

THE entire city lighted by arc electric lights and the wires supplying the currents laid underground! The very suggestion will take the breath of Philadelphians. Yet this is the aim and object of chief Walker of the electrical department, and one that is looked upon favorably by director of public works, Wagner and Mayor Fitler, and in consequence its consummation is being pushed with all the energy that is desirable in so great a project and one so fraught with complications and weighty considerations. It is intended also that the lighting shall be done by plants owned and operated by the city and not by private corporations, as most of it is done now. For a long time chief Walker has been working on the project. He has made numerous experiments with underground wires, and has consulted the plans of the city with respect to the location of plants, the laying of conduits and wires, until he could almost draw a correct map of Philadelphia with his eyes closed. While he has been working long and hard, he has still been working secretly, and has given no sign to the public of the good things that are in store for them.

Although the main points of the great project have leaked out, the chief is still reticent. "Until I have completed all my plans and submitted them to my superiors," he said, "I will not give anything out. I can assure you that there will be a good deal in the way of news in this connection before long, but just now I do not care to give it out.

Some practical experiments that the chief has been making are seen on North Broad street. Ever since the scheme of placing the disfiguring and dangerous electric light and other wires underground has been broached, the companies owning such wires have set up as an excuse for not complying with the wishes of the people the statement that it is impractical to put electric light wires underground.

Chief Walker has been experimenting largely with underground wires and with complete success. On Broad street, between Fairmount avenue and Tioga street, he has laid conduits in which he has put wires, and has been operating with them for some time arc lights in all that territory. The light surmounting neat slim poles has filled that wide and pretty thoroughfare with the brilliancy almost of day, and there has been no hitch or halt of any kind. This clearly demonstrates what can be done with underground wires.

The gloom and darkness that has filled Front street from Vine to South, will very shortly be dispelled forever. That district will be lighted with twenty-four two thousand candle-power lights, the current for which will be supplied by underground wires. This portion of Front street will then be the best lighted thoroughfare in town.

It is no longer a secret that the city officials desire to secure the wharf at Otis street, Delaware river, which is now used as a pumping station to the Kensington reservoir, for the purpose of establishing there one of the electric light stations from which the entire city will eventually be lighted.

The conduit companies have obtained the right from the city to use at least 100 miles of streets in the best paying and most populous sections of the city, and to obtain control of these conduits the municipal government would be compelled to indemnify the companies in large sums of money. So far as Chestnut street is concerned, there is no room that is not already held by private concerns. One of these companies, and the principal one—the Penn—reserves one compartment in its conduit for the use of the city.

The electric storage battery motor, as applied to an ordinary street car, under the direction of William Wharton, Jr. & Co., had a practical test a few days since in the presence of a number of gentlemen, who made a trip on one of the new motor cars from the Wharton works to Third and Walnut streets and return to Gray's Ferry, and thither to the works again, the trip having been again repeated later in the afternoon. Among those present were president Fox, of the Second and Third streets line; president Noblit, of the Fifth and Sixth streets road; president Parsons, of the People's line, and president Brooks, of the Spruce and Pine streets line; superintendent Cooper, of the Thirteenth and Fifteenth streets line; G. W. Blabon, E. C. Knight, councilman John Bardsley, Samuel R. Shipley, president Tyler, of the Fourth street national bank, and Wharton Barker. William Wharton, Jr., was master of ceremonies, and was assisted by his superintendent, G. Herbert Condict, who ran the car, and Anthony Reckenzaun, C. E., who has run cars with the same accumulators, or storage batteries, in London, Berlin and Vienna. Eighty-four accumulators are used in each car, being ranged along the side and on the bottom under the flooring, which is slightly raised to give the needed room. Sprague motors were used.

On Wednesday and Thursday of the present week a very interesting convention is to be held in this city, that of the Old-Time Telegraphers' Association. Many of the delegates will be telegraph operators who were in the military service during the war. Their headquarters during this, their seventh reunion, will be at the hotel Lafayette, with parlor C as the office and reception room. The officers of this body are: William R. Plum, Chicago, president, and George C. Maynard, Washington, vice-president, of the United States military corps, while the "Old Timers" are officered by Charles C. Hine, president, of New York, and Charles E. Taylor, vice-president, of Frankfort, Ky.

Digitized by Google

The Old-Time Telegraphers' Association was organized seven years ago. Charles E. Taylor, of Frankfort, Ky., a veteran Morse operator, seems to have been the originator of a reunion of Old-Timers at Cincinnati, on September 7, 1880. The association was formed there, and the custom of holding annual reunions is one of its principal features. The members to be eligible are required to have been in the business of telegraph operating twenty years prior to their application for admission, and to have been connected with the business at least two years.

There are quite a number of old time telegraphers in this city, and the man who is generally accredited with being the oldest Morse operator in the United States is captain Louis Chasteau, of the Park Guard. He was engaged on the earliest telegraph line between Baltimore and Washington, in the days when they had electro-magnets to work the current almost as big as a man's body. Among the old Philadelphia telegraphers are Henry Bentley, president of the Philadelphia Local Telegraph Co., Samuel A. Plush, general manager and George W. Snyder, superintendent of the Bell Telephone Co., and David R. Walker, superintendent of the electric bureau of the city.

The Bell Telephone Co. has raised its price for connections from Camden with South Jersey towns from 25 to 35 cents. To several towns this is in excess of the railroad fare.

Philadelphia, Aug. 19, 1887.

BOSTON.

Midsummer Dullness.—Business Reports of Telephone Companies.—Lighting Private Carriages by Storage Batteries.—Electric Railway Privileges.—Severe Damage by Storms in New England.—The Electric Light Association.

THIS is the season of the year when the local correspondent, with two or three rivals in the field, contending in the search for early worms, almost despairs of picking up fresh information. Moneyed men are out of town, so that the busy middleman or promoter who sets up a "syndicate" on the "ground floor," for the poor inventor of electrical apparatus, is out of employment; the "lambs" are out on mountains or fields, or are listening to what the wild waves are saying, at the sea-shore. The manufacturing concerns have had their little say, in the cooler months of the year, and wait over the heated term, before they bring out new devices, notions, or advertisements.

The American Bell Telephone Co.'s statement of the output of telephones for the month ended July 20, and the year to date is as follows:

July—	1887.	1886.	Increase
Gross output	4,345	3,279	1,066
Instruments returned	3,196	1,382	1,814
Net output	1,149	1,897	*748
Dec. 1 to July 20—			
Gross output	33,008	24,914	8,094
Instruments returned	14,310	10,644	3,666
Net output	18,698	14,270	4,428

*Decrease.

The usual quarterly dividend of 75 cents a share, was declared by the directors of the New England Telephone Co., July 27. The gross receipts of the company for three months ending June 30, were $251,781.99; expenses, $178,587.72; net receipts, $73,194 27. The comparative statement for the quarter ended June 30, is herewith tabulated:

Quarter ended June 30—	1887.	1886.	Increase
Gross receipts	$251,782	$228 043	$23,739
Gross expenses	178,588	168,858	9,730
Net earnings	$73,194	$59,185	$14,009
Construction		1,170	*1,170
Surplus	$73,194	$58,015	$15,179
First half fiscal year—			
Gross receipts	$491,690	$448,787	$42,903
Gross expenses	344,049	325,695	18,354
Net earnings	$147,641	$123,092	$24,549
Construction	3,550	2,069	1,481
Surplus	$144,091	$121,023	$23,068

*Decrease.

Mr. John G. Low, of the Chelsea Art Tile Works, is probably the first man in these parts to utilize the storage battery for lighting a carriage. He has a small battery and two incandescent lamps of five candle lights each. The cost is trifling and the convenience very great. He gave the Boston agent of the Julien storage battery quite a surprise, by springing the lights on him when calling on him at his cottage in Winthrop, the other evening. It is likely that this use of the storage battery will soon become general, being particularly convenient for hacks and other city vehicles.

The Edison company are extending their underground system through Boylston street, to the Back Bay residence district.

The following was presented to the board of aldermen, July 25th:

CORPORATION COUNSEL'S OFFICE,
14 Beacon Street, Boston.
June 30, 1887.

J. H. O'Neil, Esq., City Clerk:

Sir—I return herewith, without approving them the agreement and bond of the American Conduit & Construction Company. As the Board of Aldermen cannot authorize the company to lay and maintain pipes and conduits in the highways for the purposes named in the order referred to in said agreement and bond, the city would be liable to indictment for any obstruction of the street by said company. Very respectfully,

E. P. NETTLETON, *Corporation Counsel.*

The matter was referred to the committee on bonds.

The aldermen passed an order to allow the Cambridge Horse Railroad Co. the right to experiment with electric street cars on North Harvard street, Brighton, between Western avenue and the Cambridge line.

During the past six weeks, nature has been actively engaged in electrical business in New England. On the 25th ult., at Great Barrington, Mass., a striking feature of the storm was a cloud burst, accompanied by electrical phenomena, a huge gaseous ball descending and bursting with a loud report, the explosion blowing out a huge hole in the ground, and scattering debris in all directions. The appearance was sudden and startling, only a few rolls of thunder preceding the burst. Rain fell in sheets and the rise of water was unprecedentedly rapid. In Alford, Egremont, Great Barrington and Sheffield, selectmen were out with gangs of men endeavoring to save the roads by turning the swollen streams that dashed down the hillsides. The torrent that rushed through the banks of Green river and then swelled the Housatonic was terrific and destructive, tearing embankments, stone walls and bridges along its path. A reconnoitering locomotive on the Housatonic road was cut off by washouts before and behind, and ignominiously stranded. At least twenty-five bridges were swept down the stream, while cattle were caught in the overflowing tide and drowned.

The semi-annual convention of the National Electric Light Association, held at the Parker House, August 9th to 11th, was largely attended by representatives of electric lighting interests in all parts of the country. Five sessions were held. The papers read and discussed were upon topics of immediate interest, and brought out much interesting and useful information. The members of the association were handsomely entertained by the city authorities, the Boston Electric Club, and the Thomson-Houston Electric Co., in an excursion to Lynn via Nahant, an inspection of the Thomson-Houston works, and a banquet at Point of Pines.

BOSTON, August 16, 1887.

CHICAGO.

Lively Trade and Short Vacations.—The Electric Light Convention at Boston.—Electrical System for Directing the Movement of River Traffic.—Successful Forgery in the Office of the Central Union Telephone Co.—The City Contract for River Front Lighting Plant Awarded to the Western Electric Co.—Trade Notes.—The American Cushman Telephone Co. Sued for Injunction and Damages by the American Bell and Central Union Companies.—The Chicago Electric Club.

BUSINESS in Chicago this summer is so active that, in spite of hot and disagreeable weather in the city, short vacations are the rule. Fortunately there are within a few hours ride of the city a number of delightful resorts, on the shores of great and small lakes, where a day or two of rest may be spent. The longest trip is that made by Mr. E. M. Barton, president of the Western Electric Co., who for health and pleasure is making an extended tour in the Northwest. We understand that he is now among the glaciers and perpetual snows of Alaska.

Speaking with some of the gentlemen who represented western electric light interests at the Boston convention, we find them unanimously of the opinion that this was one of the most profitable conventions that have been held, and that the time there was spent most pleasantly too. Every one was delighted with Boston and with the courtesies shown there to the visitors.

Within the past month there has come into practical use in Chicago a system for controlling the movements of vessels in the river, by means of electrical communication, that has already shown itself to be a remarkable success. There are twenty-five bridges spanning the river, bridges over which myriads of people pass daily, and through which vessels, empty and loaded, must be constantly passing on the way between their docks and Lake Michigan. Heretofore the custom has been for a vessel moving in the river to whistle at each bridge, as a signal for it to turn and let her through. This simple plan caused considerable inconvenience for several reasons. In the first place, the noise was a public nuisance, the shrill whistles of tugs and lake steamers sounding almost without cessation. Then the delay on the streets was aggravated by the continual turning of the bridges, and the fact that they were often kept open for an unnecessary length of time; for instance, a bridge-tender instead of closing his bridge

Digitized by Google

after one vessel had passed would wait for another that he saw coming in the distance. But the noise and the unnecessary delay have been almost entirely done away with by the simple system planned and put into execution by city electrician Barrett. Telephones on each bridge are connected with a switch-board in a small building at the foot of LaSalle avenue, where a vessel despatcher is always present, who alone is responsible for the turning of the bridges. The bridge-tenders are in constant communication with him and act only by his instructions. He does not allow two large boats to block the river by trying to pass each other in a narrow place, and he reduces the number of turns of the bridges about one-half, by holding vessels until he has several bound in the same direction. When the fleet moves it moves without delay and without noise, the bridges opening one after another at the vessel despatchers' request. This seems to be the best solution of the bridge problem, as it is much more just to the shipping interests than the plan proposed of allowing vessels to move only at night.

The Central Union Telephone Co. have had an adept forger among the employés in their central office. It was recently discovered by accident that A. J. Whitman, a young man who has held a position of trust with them for several years, has been in the habit of taking blank checks and forging the names of president Phillips and treasurer Chapman so skillfully that he was easily able to obtain money on them. He collected some $18,000 in this way and squandered the money.

The Brush, Western Electric, American, Fort Wayne Jenney, Excelsior, Ball and Sperry electric light systems were represented in the competition for the city contract for river lighting mentioned in last month's letter. When the bids were opened by the commissioner of public works they were found to range from $39,840 down to $29,295, the Western Electric Co. putting in the lowest bid, and the Ball Electric Light Co. the highest These figures include the steam as well as the electric plant, with some six miles of armored submarine cable. The Chicago Arc Light and Power Co. offered to rent the lights at 45 cents per night, but it was deemed desirable for the city to own its own plant, and so the contract was awarded to the Western Electric Co. as the lowest bidder. It is expected that the lights will be burning in about 60 days.

The Western Electric Co. have a number of other large arc light contracts; they have orders from the Grand Pacific hotel, Chicago, and for street lighting at Lawrence, Kansas, and Stevens Point, Wis. They will also furnish about 280 lights for the illumination of the large buildings in which the Chicago and St. Louis expositions will be held this season.

The Central Electric Co. have established a factory at Columbia City, Indiana, where white oak timber of the finest quality abounds, and are making pins and brackets which they claim to be the best in the market. They call this branch of the business their specialty; but they also handle almost everything electrical, and have a growing trade. The Messrs. McKinlock say that they made no mistake in coming to Chicago to establish their new enterprise.

The Electrical Supply Co. are giving particular attention to the requirements of the multitude of electric lighting companies in the west. They keep on hand a large supply of insulated wires and carbon points, the wire being of their own make, and the carbons those manufactured by the Standard Carbon Co. of Pittsburgh. Manager Terry reports business this summer as most satisfactory.

The American Bell Telephone Co. and the Central Union Telephone Co have commenced action against the American Cushman Telephone Co. by suing for damages and perpetual injunctions against 40 users of the infringing instruments at Findlay, Ohio.

The next meeting of the Chicago Electric Club is appointed for Monday evening, August 22d, at the club rooms, 225 Dearborn street. Dr. Badt will read a paper on "Dangers to Human Life from Electricity."

CHICAGO, August 19, 1887.

LETTERS TO THE EDITOR.

Notice to Correspondents.

We do not hold ourselves responsible for the opinions of our correspondents.
Anonymous communications cannot be noticed.
The Editor respectfully requests that all communications may be drawn up as briefly and as much to the point as possible.
In order to facilitate reference, correspondents, when referring to any letter previously inserted will oblige by mentioning the serial number of such letter, and of the page on which it appears.
Sketches and drawings for illustrations should be on separate pieces of paper.
All communications should be addressed EDITOR OF THE ELECTRICIAN AND ELECTRICAL ENGINEER, 115 *Nassau Street, New York city.*

THE REIS "BORED-BLOCK" TELEPHONE.—A CORRECTION FROM DR. THEO. STEIN.

[73].—I have just received No. 67, July, 1887, of "THE ELECTRICIAN AND ELECTRICAL ENGINEER," which contains a translation of my open letter to Prof. Houston, sent you in German. An erroneous rendering of one paragraph therein, would give rise to misunderstanding. The passage mentioned was written by me in German as follows:

"Ich will zu Ihren Gunsten und zu Ihrer Ehre annehmen, dass Sie selbst von jenen, an dem von mir durch Vermittelung des Herrn Silvanus P. Thompson, in London nach den Vereinigten Staaten gekommenen Original Bored-Block Telephone, vorgenommenen Veränderungen Keine Kunde gehabt haben."

Owing to the German method of placing the words your translator did not apprehend the correct meaning of this sentence and has given it an entirely different significance. Below I give you the same sentence in German, arranging the words differently to make it more easily intelligible.

"Ich will zu Ihren Gunsten und zu Ihrer Ehre annehmen dass Sie selbst von jenen vorgenommenen Veränderungen an dem von mir durch Vermittelung des Herrn Silv. P. Thompson, in London nach den Vereinigten Staaten gekommenen Original Bored-Block Telephone Keine Kunde gehabt haben."

The sentence in the July No. (67) of the ELECTRICIAN AND ELECTRICAL ENGINEER, reads as follows:

"I will in your favor and to your honor believe, that you had no knowledge of the changes which *I made* on the original Bored-Block Telephone, which went to the United States through the agency of Prof. Silvanus P. Thompson, of London."

Changes I have never made on the apparatus; in fact the apparatus reached America through Mr. Thompson, as originally made by Reis. The mistake of the translation can be seen from the context following it. The passage in question (on page 282 of your July No.) should read as follows:

"I will in your favor and to your honor believe, that you had no knowledge of the changes which WERE *made* (in America) on the original bored-block telephone which went to the United States, through Prof. Silvanus P. Thompson, of London."

Begging you to make this correction if at all possible in the August number of the ELECTRICIAN AND ELECTRICAL ENGINEER, under the heading of "Letters to the Editor," I am, very respectfully, Yours truly, DR. THEO. STEIN.

Frankfort-on-the-Main, July 25th, 1887.

[Dr. Stein's letter reached us too late for insertion in August number.—EDITOR.]

THE ALTERNATING SYSTEM OF ELECTRICAL DISTRIBUTION.

[74.]—The publication of the interesting series of articles by Mr. Rankin Kennedy in the current volume of THE ELECTRICIAN AND ELECTRICAL ENGINEER, urge me to relate my own part in the development of the transformer system in the United States.

While Mr. Kennedy's articles are admirable expositions of the art, yet it would appear from them that all the credit of developing this system has been due to our English friends, and I question whether he is fully informed respecting the work which has been done in this country. It is not my purpose to write of the electrical problems which have been solved, but simply to narrate the practical developments in which I have been interested. Nor do I wish to claim for myself all the credit for what has been accomplished.

In August, 1884, while measuring the vacua of my incandescent lamps with an induction coil, I noted the relation between the quantity of current absorbed by the primary circuit, and that abstracted from the secondary coil, when the external resistance of the secondary circuit was varied. I found that the ohmic resistance of the primary coil (a thick short wire) was insufficient, in itself, to account for the difference of potential maintained at its terminals, and that the *apparent* resistance of this coil varied coincidently with variations of resistance in the secondary circuit.

As these phenomena were analogous to the counter E. M. F. developed by an electric motor, and as they varied in a precisely similar way, I used the term counter E. M. F. at that time to express the reactive effects observed. The relation of this counter effect to the applied E. M. F., and particularly its value as an immaterial variable resistance, I explained at the time to a number of my friends, and shortly afterwards undertook the formation of a system of distribution, having a high difference of potential in the main circuit and induction coils, or converters, as I called them, with which to reduce this difference of potential. My first endeavors were to apply a direct current to a converter wound with a double primary circuit, having an automatic switch to shift the applied E. M. F. from one coil to the other, together with various short-circuiting devices, intended to produce a variable field around the primary and secondary circuits; all these devices proved to be impracticable. My next endeavor was to employ an alternating generator and converters arranged in series in a manner similar to the system of Messrs. Gaulard and Gibbs, of which, however, I knew next to nothing. These coils at first caused much trouble from want of regulation, but I found that, *by saturating the core*, that is, by making the number of ampere-turns sufficiently great and the self-inductive capacity relatively small, I could obtain excellent self-regulation on a constant current circuit. This system, however, wasted a large percentage of the energy applied, and was, therefore, abandoned.

In my next experiments I used the parallel system of distribution, and immediately found all the previous obstacles removed.

Digitized by Google

The parallel system, the usefulness of which appears to have first been suggested by Mr. Kennedy (although his experiments were unknown to me when I began work in the same direction), is the natural sequence of any experimental work with the series system; for, as I found, if all the converters had their primary circuits in series, and their secondary circuits connected in parallel. then applying a constant E. M. F. to the primary circuit, a constant difference of potential was obtained from the secondary circuit. The experimental proof of this proposition at once developed the utility of such a system, and the construction of the necessary apparatus for generating and transforming currents of high potential required but the application of previously acquired knowledge.

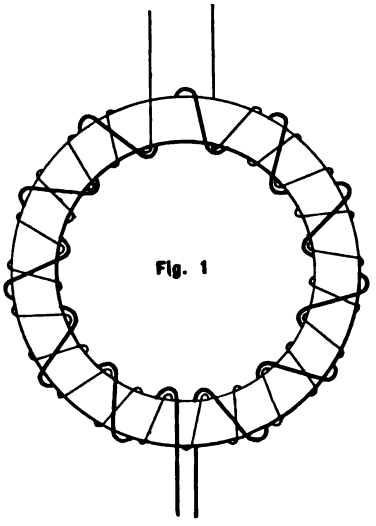
Fig. 1

In working out a commercial transformer, I began with the Faraday ring type, figures 1, 2 and 3. By adding projecting lugs or teeth, as in a Gramme armature, figure 4. I somewhat reduced the magnetic resistance. I then applied internal and external rings (see figure 5), to reduce the length of the magnetic circuits; this form, however, was inconvenient to construct, and was abandoned almost immediately in favor of the type at present used, figures 6 and 7, which is a development of the Gramme ring type of converter, for it is simply one coil of a Gramme ring with its inner and outer sheathing of iron.

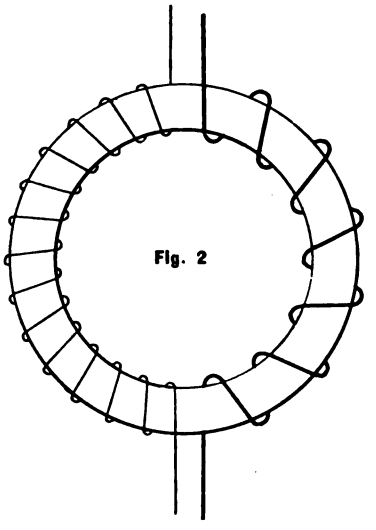
Fig. 2

Figures —— show one of my converters as manufactured by the Westinghouse Electric Company, and figure —, the outer case, for protecting it from the weather.[1] In the fall and winter of 1885 I established a central lighting station, employing these converters, at Great Barrington, Mass. This, I believe, was the first station in America operated on the induction system. We fed about 150 incandescent lamps on a circuit of No. 6 (B. & S.) wire, the circuit being nearly a mile in length. The lamps were largely used in the village stores and for general lighting. So successful was this attempt, that the Westinghouse Electric Company immediately undertook the construction and installation of a large number of stations upon the same general plan.

The advantages obtained by a double conversion system are very great. In such a system the cost of the conductors and, more important still, the loss of potential in the line, even for very long distances, may be substantially disregarded. In order to do away as nearly as possible with the loss in conversion that

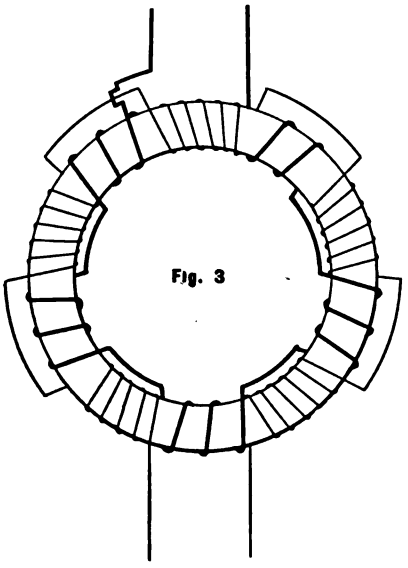
Fig. 3

is due to what may be termed magnetic friction, I have designed a system, which, I believe, to be entirely novel. In this I employ what I term "auto-converters," viz.: converters or transformers, each consisting of a single coil only.

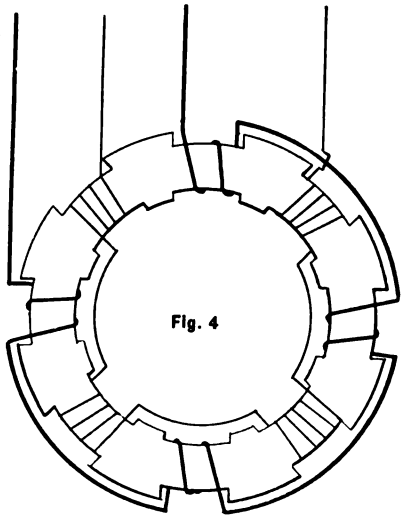
Fig. 4

Figure 8 shows one method of raising the potential by means of the "auto-converter." A-B is a converter consisting of a single coil. It is evident that one-half of the coil acts to the other half

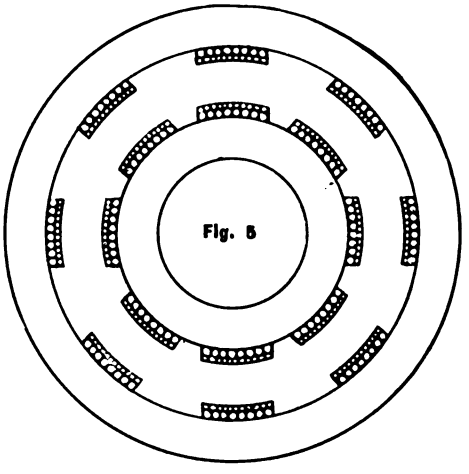
Fig. 5

as the primary of an induction coil to its secondary, and the potential between A and B is constant and is double that of A-C. Figure 9 shows an auto-converter for reducing the potential

1. These figures, being essentially the same as figures 7, 8, 9, 11, 12 and 13, on pages 336 and 337 of the present issue of the ELECTRICIAN AND ELECTRICAL ENGINEER, are not repeated here, but will serve to explain fully Mr. Stanley's reference.—[ED.]

Digitized by Google

economically, *i.e.*, with less loss than with a double coil transformer. At intermediate points, C′ D′ E′, of the single coil, A′ B′, loops are left out from the coil, and from these loops service wires are run, between which translating devices are connected in parallel in the usual manner.

Fig. 6

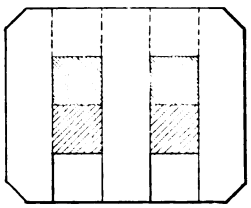

Fig. 7

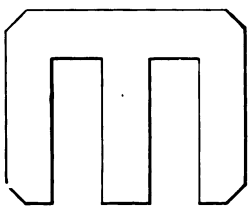

It is evident, that if the resistance between adjacent loops is equal, the arrangement becomes a series multiple coupling, and the coil, A′ B′, has no work to do, and consequently there is no loss due to conversion. If, however, the resistance between any two adjacent loops is varied, say for instance, increased, then that portion of the coil, A-B, included between those loops acts as a primary to the rest of the coil, and the potential difference between all the loops remains constant. From this it will be seen

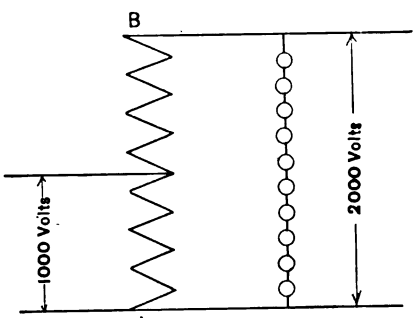

Fig. 8

that the coil acts to supply an induced current only to such resistances in any loop as are less than the resistance of the neighboring loops, and, therefore, the loss due to conversion is simply that due to the conversion of the current flowing through the algebraic sum of the resistances of the separate loops.

This form of converter possesses the same merit in potential distribution that the three-wire system does in the direct system. The real value of the induction system lies in the fact that by it

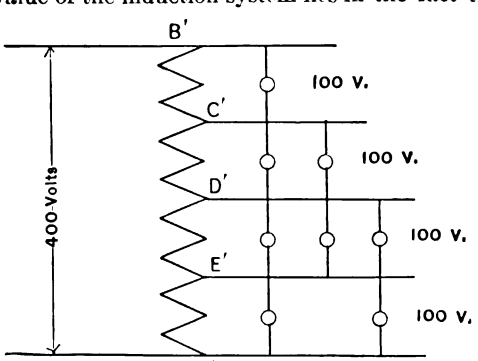

Fig. 9

potentials may be varied, raised or lowered at will, in the majority of cases with an accompanying loss of less than 2 per cent., and in many cases with no loss at all. If it were generally understood that the potential applied to a coil is simply distributed over its entire length at an equal voltage per unit of length, and hence that to obtain any desired E. M. F., it is simply necessary to tap off an equivalent length from the coil, the practical applications of the self-induction coil would be far more numerous than they now are.

There is a general misunderstanding to the effect that the alternating system of distribution in this country is, in its details, the invention of Messrs. Gaulard and Gibbs. None of the apparatus now used, however, was either designed or invented by them, nor is the system of distribution employed in connection with two or more converters, the series system employed by these gentlemen.

But while the credit of the alternating inductive system, which has now become a commercial success in the United States, cannot be given entirely to Gaulard & Gibbs, their labors have, nevertheless, been most valuable, in that by their persistent efforts toward the practical application of induction coils in electric lighting, they have drawn the attention of electricians generally to the subject, and thus paved the way for the new departure in electric engineering.

WILLIAM STANLEY, JR.

Great Barrington, Mass., August 20th, 1887.

THE REPORT OF THE COMMITTEE ON INSULATION AND INSTALLATION OF THE ELECTRIC LIGHT ASSOCIATION.

[75.]—I notice in the reports of the sixth meeting of the National Electric Light Association, several statements concerning the report of the Committee on Insulation and Installation, to which as chairman of the committee I take exception.

Not having been able, through press of business engagements, to attend the meeting of the association, I desire through your columns to call attention to the following statements made concerning the above committee, viz.:

1st. The statement made by Mr. De Camp that he understood the committee did not wish to be responsible for their report.

I am unable to comprehend how anything in the report itself, or anything I may have said personally to Mr. De Camp could be construed into an expression of unwillingness to assume the responsibility for anything to which I was willing to append my signature, and this I am sure can be said for the other members of the committee who signed the report.

What the committee did wish understood, as they stated in their report, was that they recognized the fact that some additions or alterations would probably be necessary in the code of tests proposed, when such code came to be subjected to actual trial.

2d. The statement made by the president, Col. Morrison, that "this committee, either all six, or one of its members, perhaps more, wrote to me asking, &c.," for an appropriation to meet expenses in carrying out tests. If Col. Morrison will refer to the letter in question he will find that it was written by the secretary of the committee, at the request of the committee itself, all of whom were present with the exception of Mr. Robinson.

The letter referred to, contained the following phraseology in reference to the expenditures; viz.: that the committee be authorized "to expend a sum for express charges. stationery, incidentals and alterations, not to exceed $1,000; and, further, that the responsibility of accidental injury to the machines or instruments be assumed by the National Electric Light Association."

3d. The statement of the president, that from the date of receipt of the above letter "nothing more was heard from the committe until this paper, with quite a column of printed matter, was sent in yesterday or the day before to the National Electric Light Association."

As chairman of the committee, I notified Mr. F. A. Gilbert, chairman of the executive committee, some ten days or two weeks before the meeting of the association, that the committee on insulation and installation would submit an incomplete report. This information does not appear to have been communicated to the president of the association by the chairman of the executive committee.

In conclusion, permit me to express my regrets that the earnest effort of the committee to give to the association the best of what they had been able to accomplish should not have met with a more courteous treatment than that of having their report laid on the table.

Very respectfully yours,

EDWIN J. HOUSTON,
Chairman of the Committee.

PHILADELPHIA, August 22, 1887.

THE LATE ALVAN CLARK.

THE advancement of science has probably received no greater impulse in this country than has been given by the genius of Alvan Clark, the celebrated telescope maker, who died at his home in Cambridgeport on August 19th, at the advanced age of 84 years. For more than thirty years that home and the unpretentious building in which he has done his famous work, has been a place of interest and the Mecca of pilgrimage to the astronomers of every nation of the world who wanted better instruments than they could obtain elsewhere; and it is safe to say that

Digitized by Google

none ever made the visit without carrying away a feeling of the highest admiration, not only for his genius, but for his simple and lovely character. In exceeding modesty, in love of truth, in his infinite patience to arrive at perfection, he closely resembled the greatest of English astronomers, and he should be called the Herschel of America.

Each of these men was about forty years old, when he was led, with no idea of the ultimate result, to undertake the construction of telescopes. Herschel, the musician of Bath, having found great enjoyment in reading a book upon music, was led to read another by the same author upon optics. A new interest was thereby awakened, a new field opened to his imagination, and from the book he looked up to the heavens; then he wanted a telescope. The loan of a small one from a friend whetted his appetite; the cost of a larger one was beyond his means, and he resolved to make one for himself. Then followed years of labor, but at the end the king sent for him to bring his telescope to London and show the new planet which he had added to the solar system.

Clark, the artist, while painting portraits in Boston, often passed his leisure hours in rifle shooting, his fine mechanical genius enabling him to make the most perfect weapon, while his accuracy of eye probably justified his claim to being the "best shot" in his native state. While thus amusing himself he wanted a better telescope for his rifle than any one could make for him, and he determined to make it for himself. The almost minute lenses for this instrument were the natural precursors—for there his spirit found its work—of the enormous glasses, the work of his hands and which have revealed siderial objects far beyond the ken of Herschel's mirrors.

The successive increase of the size of his glasses was achieved only during years of patient toil; nor did recognition begin at home. Having once finished a fine glass, but one that would now be considered of very moderate size, he set himself the task of plotting down all the stars it could reveal to him in the great nebula of Orion. He desired to verify some of his observations, and craved permission to look through the large telescope of a venerable institution situated not far from his home. The request was granted with some hesitation, and probably some indications of annoyance on the part of those having charge. A little time passed, and the director of the same institution learned that the great "Fraunhofer" which was under his charge had been surpassed, both in size and in definition, by a telescope made by his modest visitor, and that by means of it the long suspected companion of Sirius had been discovered. And so the director asked permission to come and look through Mr. Clark's telescope, a request not only granted but followed by a life-long friendship.

The first recognition came from England. The Rev. W. R. Dawes, a lover of telescopes, and a keen sighted observer, learned of his work, and ordered a large glass. He found it better than the best work of the European artists, and the publication of its performance fixed the fame of Clark.

When he began working it was difficult to obtain glass of sufficient purity to make a telescope of even eight inches in diameter. It is probably safe to say that the remarkable progress of the glass makers of Europe in producing pure discs, finally up to 36 inches in diameter, is in part due to the avowed ability and willingness of this American artist to work to a perfect figure, object glasses of any size that could be produced.

Clark went to England in 1858, and visited his patron Dawes. While there he called upon old Admiral Smyth, the Nestor of amateur astronomers, who said of him, "There is no end of the findings of such an ardent gazer as this American is; divers proofs of his prowess will be found in the monthly notices of the Royal Astronomical Society."

Herschel's name is popularly associated with the "forty-foot telescope" which he erected at Slough, under the patronage of the king; but astronomers well know that this was far from a perfect instrument, and that his fame and his discoveries were due to the delicate precision of his smaller telescopes. So Clark's genius is probably more generally recognized by astronomers on account of the great beauty and perfection of the telescopes he has made of moderate size, than of the gigantic and almost unwieldy tubes that look upward from the antipodal regions of Russia and California.

It would be too much to say that Clark leaves no successor. His sons are possessed perhaps of all his marvelous practical skill; still there are those who affirm that object glasses by his hands will command a premium in time to come on account of their intrinsic merit—that "something" which the touch of genius only can give—which steers the light aright and makes them instruments of discovery.

D. W. E.

LITERATURE.

REVIEWS.

Die Wrkungsgesetze der Dynamo-Elektrischen Maschinen. By DR. F. AUERBACH. Published by A. Hartleben, Vienna, Pesth and Leipzig.

THIS little book on the laws of the action of dynamos, constitutes the 38th and latest volume of the electro-technical library issued by the same publisher. It treats chiefly of elaborate mathematical and physical theories of the dynamo, under the latter term in German, being understood self-exciting machines only. The author compiles, compares and discusses the various theories advanced, chiefly by German physicists, and among these more particularly the theories of Clausius and those of Froehlich, to which he adds experimental data and theories which are presumably his own. The theories of Clausius and Froehlich, which have been published within the last few years in the *Elektrotechnische Zeitschrift*, are given here more concisely; in which form they will no doubt be better appreciated by the average reader. To students and others who are interested in purely mathematical discussions, this book no doubt presents a fair and brief summary up to its date of publication; but for those who are practically engaged in designing and building dynamos there is little that will assist them which is not contained in any good work on the subject. For example, after discussing the theories the author concludes from them that for low external resistance series machines are the best, and for high external resistance shunt machines are best; this, as is well-known to any one practically engaged with machines and plants, is exactly the reverse of what is found best in actual practice, shunt machines being almost invariably used for incandescent lighting in multiple arc, and series machines for arc lighting in series.

The theories as advanced here are in general based on the action of the dynamo as a whole. Although this may be a safe way of attacking such a problem, we venture to predict that this is not the way in which it will ultimately be solved, at least not if the theory is to be in such a form as to enable the designer to deduce therefrom the best and most economic proportions of all the parts. A dynamo consists of two separate parts, the armature or inductor, and the electro-magnet or field, and as these may be of such widely different forms and combinations, general formulæ applying to all alike, would naturally be too complicated, and would contain too many unknown and widely varying "constants" to be of much practical value to the designer. The problem will probably be solved most satisfactorily when the armature is considered alone as an inductor pure and simple, and the field alone as a magnet, the best combinations will then no doubt present less difficulty than if both are considered together. It is gratifying to be able to say that a departure in this direction has already been made.

The book contains 84 neat illustrations, mostly diagrammatic representations, characteristics of dynamos, and curves showing tabulated results. Among the most interesting and instructive of these, are some of the apparently original ones in chapter ii, showing very clearly the induction in a loop moved in different parts of various fields, by the number of lines of force cut. He describes the measurement of magnetism and magnetic intensity by the unit lines of force, and states that the latter evidently make complete circuits closed in themselves, as an electric current. In several chapters are contained numerous tabulated results of series of experiments on dynamos. Neither alternating current nor unipolar machines receive particular mention. The volume concludes with a chapter of "special problems."

On page 245 there is a numerical error; to reduce volt-amperes to kilogram-meters per second, the former must be multiplied by .1019 and not 6.12 as stated; the latter number reduces them to kilogram-meters per minute.

C. H.

Digitized by Google

ELECTRICAL NEWS AND NOTES.

THE NATIONAL ELECTRIC LIGHT ASSOCIATION.

SIXTH SEMI-ANNUAL MEETING.

THE sixth meeting of the National Electric Light Association was held in Boston, Aug. 9–11, in the large dining room of the Parker House.

The meeting was called to order by President Morrison, at 10.30 A.M., on August 9th.

The President read an opening address, as follows:

Gentlemen of the National Electric Light Association:

I have again to congratulate you upon the success of your organization, which the large attendance to-day from all over the country evidences. Inventive ability and irrepressible energy of the most pronounced character still farther encourages us in the belief that if electrical business does not achieve a phenomenal success, it shall not be for want of intellectual activity, energy and integrity.

Great progress has been made in the last six months in electric lighting generally, but especially in the development of incandescent systems. The induction system, which permits of low tension lamps, at a great distance from the station, is a branch of lighting that has greatly increased since the last convention, and is now successfully conducted in numerous places. This system, more than any other formerly in use, is designed to find its place in the illumination of private houses. Its flexibility is very great. Its farther development is encouraging.

Lighting by storage batteries has also received a great impetus within the last three months, and while there are still some difficulties to overcome in certain branches of illumination, it is fast superseding the dangerous oil lamp on railway trains.

Dynamos have been perfected so as to give greater efficiency per pound of metal used, and our electricians are constantly working to reduce the cost of the machines, and thereby insure a large market for the same.

The perfection of the arc lamp has increased, and the demand for the same in the last six months exceeds the output of the previous eighteen months.

Mill owners and others are beginning to realize the enormous advantages of the electrical illuminant, not only in the more healthful condition of the operative, but also in the greatly decreased fire risks. The underwriters throughout the country recommend the introduction of incandescent lights to their patrons in all factories where inflammatory fabrics are made.

Abroad, the introduction of electrical installations has been slow and unsatisfactory, but of late our brethren across the ocean have taken up the subject with vigor, and to-day are becoming formidable rivals in the enterprising spirit of this country in the adoption of electric energy for all uses.

The patent office question, perplexing and unsatisfactory as we are well aware it is, is now receiving attention through the agitation of the subject by the association, and we intend to keep this matter before the world until legislation shall be compelled to furnish what is needful.

As suggestive of the multiplicity of uses to which electricity may be put, Lieut. Murdock submits a paper setting forth and explaining the electrical requirements for the new government cruisers; and although this especial electrical application would necessarily be limited, it would no doubt be useful, and still farther evidences the desire and demand for the applications of electrical devices in every branch of industry.

The perplexing wire gauge matter will again be placed before you, and if the work of the past six months of the committee on this subject corresponds with the exhaustive and excellent report made at the last convention, we may expect something definite enough this time to decide the attitude of this association in relation thereto.

I regret to have to announce the absence of the report of the committee on insulation of wire and the proper installation and construction of plant. This committee requested the association to provide the necessary means to enable them to carry out their investigation. But, as the association was in no condition to render them the pecuniary aid they required, they determined not to pursue their work any further. I believe this to be a loss to the association; as from the statements they have made or what they intended to do, if they only had the means, I can easily foresee the loss of a great deal of valuable information to ourselves and to the world at large.

I have now the honor of introducing to this association one of the most popular mayors that the city of Boston has ever had, a gentleman who represents public interests more than the interests of any particular party or clique, and who under the most trying circumstances has shown his fidelity as a public representative to such an extent as shall make his official administration one of the most memorable landmarks in the history of Boston's progress.

On the conclusion of his address Mr. Morrison introduced the Hon. Hugh O'Brien, Mayor of Boston, who said:—

Mr. President and Gentlemen of the National Electric Light Association: You almost overcome me, Mr. President, by your very flattering remarks; but it gives the Mayor of Boston great pleasure to welcome so many distinguished gentlemen to the city who are engaged in a very important work. I hope your visit will be a pleasant one, as well as a profitable one, and if you can show us any way whereby we can light our streets and dwellings better than the work is now done, we shall be very thankful to you, Mr. President, and your association.

I read in the papers a few weeks ago that immense fortunes were made in the electric lighting business. It must be a very attractive business, and I suppose now that I am addressing not only men engaged in electric lighting work but millionaires of various degrees (laughter). Our experience in Boston does not, I am sorry to say, corroborate that supposition. Electric lighting so far has been introduced by the energy, the ability and the intelligence of men who have been engaged in local lighting. I believe it is their intelligence that has scattered the electric light over the country in such large proportions in every city and many of the country towns. So far, I believe, profits have not been very equally divided. Some few men, I have no doubt, have grown rich in the electric lighting business; but I am satisfied that every man who has started a local company either in this city or in any other city of the country has been more a public benefactor than a successful money maker through his work. I do not intend, gentlemen, to advise you or say anything about the work which you are engaged in. I have no doubt your discussions will be interesting, and I hope that your visit to Boston will be a pleasant and agreeable one. I know it must be very satisfactory to many of you coming from cities and towns where the thermometer ranges up to the hundreds to visit so delightful a city as we have here in Boston where you can enjoy good fresh air at about 65. And if you have time, it would give me pleasure to take you down our beautiful harbor and into our beautiful suburbs, and I hope you will not leave Boston before you visit these attractions.

If you can give us any advice about the electric motor we should be very much obliged to you. We have street car lines running in all directions and we would like to run them by electric motors; but the experience of electric lighting men in these parts shows that experiments are very expensive, and we hope that some of you who are running electric railroad motors in other sections of the country will give us some intelligent advice on that subject. We also believe in the motor business here. Boston has neglected small industries. I believe if you establish a motor that will do the work that you will enable us to build up a great many small industries that have been neglected in our city.

I will not detain you any longer, gentlemen, but I again hope that your visit to Boston will be a pleasant one to you all. (Applause.)

The secretary made a brief report, embracing the treasurer's account which was referred to the executive committee for verification.

The president then called for the report of the Committee on Patent Legislation.

Mr. Arthur Steuart—I have the honor to make the report of the Legal Committee as well as the report of the committee appointed at the February meeting in Philadelphia—a special committee on patent legislation. At that meeting I had the honor to read a paper upon necessary reforms in the patent system, particularly with reference to those reforms that were needed in the patent office, and I pointed out at that time numerous changes that were thought necessary in the patent office. The principal among them was the establishment in the patent office of a court that would embody in itself the jurisdiction that is now divided up among half a dozen different officers all of whom are acting to a greater or less extent at cross purposes with one another. The second subject which was considered was that of an increased calibre of the personnel of the office, and some systems were suggested. The third was the increase of space in the patent office and the establishment of a laboratory for the conduct of experiments, principally electrical, which are very much needed, and we had the pleasure of having a few words from Mr. C. J. Kintner, who was at that time the examiner-in-chief of the electrical division—since resigned—in which he set before you very clearly the very great need of the office in that particular, there being absolutely no laboratory or any apparatus of any consequence—he said not over five hundred dollars worth, in all—to test the inventions which are constantly increasing in number, and which require to be tested in order to be understood. The committee now submit the following report:

REPORT OF LEGAL COMMITTEE ON U. S. PATENTS.

At the February meeting of this association, your legal committee made a report in which were set out some of the present needs of the United States Patent Office; and suggested a means by which the needs might be met and the defects remedied.

The subject being one of great importance, a special committee

Digitized by Google

upon patent legislation was appointed, consisting of Mr. J. F. Morrison, Baltimore; Mr. Walter C. Kerr, New York; Mr. Frank Ridlon, Boston; Mr. F. J. Sprague, New York, and Mr. Arthur Steuart, Baltimore, the chairman of the legal committee, to further consider the questions presented, and make a full report to this convention. Your committee has given the matter careful consideration and report that they are convinced that that branch of the patent system which relates to the granting of patents is based upon a law which was formulated at a time when the mass of business to which it was applicable was one-fiftieth part of what it is at present, and that the law needs revision in the following particulars among others:

I.

The statute law of the United States relative to the granting of patents has very few provisions which determine the rights of the applicants. The result is that nearly all the vital questions both of law and fact by which the rights of applicants for patents are to be determined now lie within the jurisdiction of the various branches of the patent office. The examiners have nearly all questions of fact to determine primarily as well as many questions of law, and their jurisdiction is divided up among a number of junior examiners who are overburdened with work. The examiner of interferences sits as a court to determine the question of priority between contestants for patent on the same invention. From the primary examiners cases go on appeal to a board of examiners in chief and from there to the commissioner, and appeals from examiner of interferences go to the commissioner. The personnel of the office is constantly changing, the commissioners more often than others. Then too, the persons who are appointed to the position of commissioner are generally chosen from some reason that has no connection with patent law, so that as a general rule the highest appellate tribunal knows less about the law and practice of the patent office and the rules by which patent cases are to be decided than the examiner from whom the first appeal is taken. This being true, it is not surprising that the examiners pay comparatively little respect to the decisions of the commissioner, and also that one green commissioner following another in quick succession should make rulings which result in a hopeless chaos in the practice. In addition to this fact the commissioner is burdened with executive duties which demand so much of his time, that with the greatest experience and power of work it is impossible for him to properly consider the numerous important cases presented for his decision.

In order that the legal rights of the patentees may be fully defined and secured, it is necessary that those rights should be understood and a settled method of obtaining them established; for this reason it is desirable that some means should be adopted to make clear and uniform the practice of the patent office.

All authorities seem to agree that the best method of accomplishing this result is to establish a strong court in the patent office that shall have jurisdiction of all legal questions arising in relation to the issuance of patents as well as all questions of fact which arise in interference proceedings, and on appeal from the examiners.

II.

The work required of the examiners in the patent office is of such a technical nature and so important to the public, that it seems to be desirable that the patent office should be put on the same footing as the army and navy. That the examiners should be educated for the service, should receive compensation equal in corresponding positions to officers of the army and navy, should have the same system of admission and promotion upon examination, and retirement on pay equal to that of those departments of the public service.

III.

The patent office is now cramped for space, the employés are crowded into quarters half large enough for them, and the patent office building, built with money paid the government by patentees, is more than half occupied by the interior department, which should have separate accommodations Additional space would enable the patent office to have a laboratory, so much needed, for the demonstration of electrical and other scientific discoveries and inventions.

To accomplish these reforms, the most cautious, expeditious, and at the same time intelligent way, seems to be a creation of a commission to be appointed by the President which shall carefully examine these and all other questions relative to the subject and report an act to Congress which will provide for their solution. We suggest the following bill which we propose shall be submitted to Congress this winter for passage:

A BILL CREATING A COMMISSION TO EXAMINE AND REPORT TO CONGRESS NEEDFUL REFORMS IN THE PATENT LAW.

Whereas, The Patent Laws of the United States are deemed to be in such a condition as to require revision; therefore,

Be it enacted, by the Senate and House of Representatives of the United States, in Congress assembled:

Section 1. That a commission be, and the same is hereby created, to consist of three suitable persons to be appointed by the President of the United States, who shall hold office until a final report of this commission is submitted to and accepted by Congress, and who shall receive for their service a compensation of $5,000 each per annum.

Sec. 2. It shall be the duty of this commission to examine thoroughly the patent laws of the United States, and those of other countries, and their practical operation and effect, in meeting the needs of the public and fulfilling the purposes for which they were created; to formulate a report to be submitted to Congress which shall set forth the results of this investigation and their conclusions therefrom, with reference to changes in, or additions to, the present law, pertaining to patents The report shall also contain a draft of an act which will provide for the changes found necessary by the investigations of the commission.

Sec. 3. The commission is authorized to employ such clerical force as may be necessary for the proper conduct of its work and to incur such other expenses for stationery, printing, etc., as may be found expedient.

Sec. 4. The salaries of the members of this commission as well as all expenses legitimately incident to its work, shall be paid from the surplus in the United States Treasury to the credit of the patent office. All expenditures by or for said commission, other than the salaries of the members, shall, however, be under the control of and authorized by the Secretary of the Interior.

And now a duty devolves upon the members of the association. It is one thing for your committee to make this report, but a totally different thing to have it passed by Congress. That result can, however, be accomplished if the members of the association will intelligently and faithfully support the hands of their committee, by themselves, each one of them, doing the part of the work assigned him to do. This association represents twenty-four states, and members of this association are fellow townsmen with eighty members of the House and Senate, while the members of the House and Senate from the states represented in the association are 61 per cent. of all the members of Congress. The committee have divided up the members of Congress among you, and assigned to each the duty of seeing the members of Congress from his state, and urging upon them the importance of the passage of this bill. Its passage lies in your hands.

The committee think it very desirable that the next meeting of the association be held in the city of Washington. The location is central and Congress will be in session at that time. The members of Congress will have an opportunity of seeing how large and important an interest is calling upon them for action, and the members of the association can take the opportunity of waiting upon their representatives in Congress and urging the passage of the bill we present for the appointment of the commission.

Present at the meeting of committee, July, 21, 1887, New York:

J. F. MORRISON,
FRANK RIDLON,
WALTER C. KERR,
F. J. SPRAGUE,
ARTHUR STEUART, *Chairman.*

Mr. Steuart supplemented his report by remarks as follows:—

I have only one other word to say and that is to submit the written report of the legal bureau. I shall not read it. It simply gives a statement of work being done by the legal bureau, of which I have the honor to be the custodian, in reference to a digest of the literature of electric lighting. We have at our command at present a set of journals and books which I suppose are not to be found anywhere in this country save in Baltimore, and we are now preparing an analytical digest of the literature of the subject, which we feel sure will be useful to the association.

Mr. Frank Ridlon offered the following resolution:—

Resolved, That the report of the Committee on Patent Legislation be accepted and the committee continued and authorized to take such steps not involving expense to the association that they may find necessary to have the bill as presented passed by Congress.

The resolution was seconded by Mr. Lynch, and adopted.

The President—The report of the Committee on Revision of the Constitution will be presented by Mr. DeCamp.

Mr. DeCamp—In looking over the reports of the various meetings it appears that several amendments have been made to the constitution, as printed, that change it entirely. Therefore we have thought fit to submit an entirely new constitution as a substitute for that which was originally adopted, and I now lay it before you.

The report of the Committee on Revision of the Constitution was read by the secretary:—

After some discussion on the propriety of making the office of secretary and treasurer one of appointment with the president, the report was recommitted, with instructions to the committee to report at a later session. Mr. Duncan was added to the committee.

REPORT OF WIRE GAUGE COMMITTEE.

The committee on wire gauge, Mr. Allan V. Garratt, chairman, presented as its report a carefully prepared table

Digitized by Google

of "Mathematical Properties of the Metric Wire Gauge," printed and distributed among the members of the association. In presenting it, Mr. Garratt said: A year ago in Detroit, a committee was appointed to consider the matter of wire gauge, which at that time was in an almost hopeless condition. After six months of constant correspondence with the largest users and makers of wire in this country and abroad, and the leading scientists in the speciality of electricity, I reported at Philadelphia that this association should do two things—first, that it vote that the British standard gauge be no longer the recognized gauge of this association, and secondly, that the metric system be made the basis of measuring wire. Both of those propositions were accepted. The honor conferred upon me in accepting my report was not less than the honor I received in being again placed at the head of the committee to elaborate this subject. The committee was considerably increased by the addition of some valuable members. During the six months we have taken up the subject of measuring wire in simple diameter in tenths of a millimeter, and have elaborated it into a mathematical table. This table is not of necessity a gauge, although the first column to the left represents a series of even numbers—integral numbers, which agree with the tenths of millimeters which appear in the next column or column No. 2. The object of doing that, is this: in sending telegraphic messages I find it is almost impossible to make a telegraph operator use a decimal point. It is almost impossible also in hasty writing to get the decimal point in the right place. For common purposes, in speaking of wires in ordinary business parlance a simple number is more convenient than a number with a decimal point, for this reason, a column of figures is used with simply the decimal point removed. That, however, is not the gauge, if there is any gauge. The gauge, if there be one, is simply the measuring of wires in diameter of tenths of a millimeter. That appears in column 2. As we have in this country a unit which is much more familiar—the inch—it seemed wise to this committee to convert those diameters into inches for the purpose of referring to tables which are already constructed, and with which many electricians are thoroughly familiar For that reason, table No. 2 was multiplied by a constant which represents tenths of millimeters in the denomination of inches. That converts the tenths of millimeters into inches, so that though unfamiliar with the metrical properties of wires, one can readily refer to these tables and see just what they are. There are three properties of wires which enter into the work which we have to do—the tensile strength of the wire—that I shall not touch upon; it is a subject by itself and does not directly interest us; the static capacity of wires—that I shall not touch upon, because in electric lighting wires it is entirely a negligible quantity in the present state of the art. The third property, is the conductivity, and it is necessary for us to know the ratios of conductivity to weight, to size in diameter and to length of conductor. The first thing we want to know about a wire to determine its physical properties is its sectional area. In this particular table, to insure almost absolute accuracy, the mathematical work was done independently by two members of the committee; Mr. P. Keilholtz, of Baltimore, independently calculated tables 4 and 5. Mr. Herbert H. Eustis, calculated the same tables. They were both submitted to me; I compared them and found some differences. Where differences occurred, I independently made two calculations upon different days, and if those two calculations agreed, I submitted them to the other gentlemen and the alteration was made in their calculation. Virtually then, columns 4 and 5 have been independently calculated by three persons. The likelihood of error has been reduced to a minimum by not calculating by ordinary arithmetic, but by logarithms, and the logarithm used was that employed in fine astronomical calculations—the seventh place logarithm compiled by Vega. I will say that carries the accuracy so far that even in calculations as to the solar system very slight errors are found. In that calculation comes in the property of the π ratio. The section area was calculated by these two gentlemen from different formulæ. Mr. Eustis calculated it from the square of the radius multiplied by this ratio ($r^2\,\pi$). Mr. Keilholtz calculated it by the square of the diameter multiplied by π and divided by 4; $\left(\frac{d^2\,\pi}{4}\right)$ two entirely independent calculations. Probably the tables here of area in square millemeters and square inches is about as correct as it is possible to make a table of figures.

Before I go on to the other details, I will say here why we put this question of sectional area so conspicuously on this table and so near the beginning. The conductivity of wire is directly proportional to the sectional area. It is, however, proportional to another property, which is entirely independent of the π ratio, and which is extremely simple in practical use. The conductivities of wires are directly proportional to the squares of their diameters. You will find, in column No. 16, squares of diameters. Wires have to be used by a great many men who are too hurried in life to familiarize themselves with mathematics and electrical formulæ, and who want to get quickly at what wires may be expected to do. From this simple table, No. 16, by simple arithmetic, you can arrive at almost any physical or electrical property of a wire. For instance, if I have a small wire or if I have 20 small wires, and I wanted to have a large wire of the same conductivity, I would simply have to take that square of diameter multiplied by 20 and look in the table and find the nearest corresponding number in column No. 16, and I would have the wire which would give the same conductivity.

All the columns in the table were figured independently by two members of the committee. The units were taken from Matthiesen's last determination—the British Association unit—multiplied by the constant which converts that resistance into the legal ohm. Hence that resistance, and also the physical properties against the resistance, such as feet per ohm, and pounds per ohm, correspond to the legal ohm.

Many gentlemen will take exception to the fact that the calculations are made at zero centigrade. This convention, if it sends out this circular, commits itself to the scientific world as doing a thing which no trade body in the United States has heretofore done. It is a scientific matter. It will be studied. Those calculations will be gone over by scientists and mathematicians. Zero centigrade is now recognized the world over as the unit of temperature. There is no probability of its being changed in the immediate future. I have corresponded with leading professional electricians in this country and without a single exception they replied to me—by all means determine your gauge on zero. The zero centigrade is that on which all scientific work is based when the question of temperature is involved.

As to the question of making these determinations of resistance, etc., on commercial copper or on pure copper, the committee found it utterly impossible to determine what commercial copper was; hence, this table has been calculated upon the basis of chemically pure copper. If any manufacturers adopt and use this, it will be very easy for them to append a constant at the bottom of their tables, which you can multiply into any one of these properties and convert your weight, your resistance, etc., directly into the degree of purity which they claim to put out commercially.

There are two other columns here which may not be of much interest, but which this committee has seen fit to tabulate to enable electricians generally to make calculations in fine electrical work; that is, a table of logarithms of area. We have appended seven place logarithms which have been calculated by three members of the committee—a logarithm of the square millimeter and a logarithm of the square inch. That, of course, is not a commercial figure; I don't know that it will ever appear in a trade statement; but it is valuable for us to use and put out.

Columns 17 and 18 contain the numbers nearest corresponding in the Birmingham, and Brown and Sharpe gauges. The Brown and Sharpe gauge I have taken from a manuscript copy sent to a member of the committee by Messrs. Brown and Sharpe, and I will say here that very few of the wire drawers who publish Brown and Sharpe tables, agree as to the actual size of Brown and Sharpe numbers. I examined one table in which, out of 40 numbers of Brown and Sharpe, 28 were wrong, and that was from one of the best wire makers in the country.

In regard to the Birmingham gauge, I will say there are 14 independent Birmingham gauges in use at the present time. I have taken Mr. Gordon's figures of the Birmingham gauge for the purpose of comparing it with the metric. Mr. Gordon has spent a great deal of time upon the question of the physical and electrical qualities of wires. He has compiled the largest tables on the properties of wires which have ever been made, expressed in the old ohm.

This committee has been very glad to do this work. All of the work other than the first five columns has been calculated by Mr. Eustis and myself. It has occupied every evening for three or four weeks until past midnight most of the time. We have put our best work and energy into this. We have based it upon the best information that we could get inside and outside of this association, and we have not failed to consult with any one from whom we could get assistance. We have corresponded with the Smithsonian Institution at Washington, and although they were unable for want of apparatus to give us any direct aid, they gave us their most hearty assurance that the deliberations of this assembly should receive proper recognition before the government of the United States, and if in their opinion it was wise, it would be adopted as the governmental measure of wire. I will say here that by act of Congress the metric system is already the legal system of measuring of the United States government. Every scientist works in it and every chemist, and it is simply a question of time, no matter whether we adopt this particular gauge or whether we discard it as useless—it is simply a question of time when the properties of everything that can be measured will be determined in the metric system. We have this now in this form. It is useless for any body of men to attempt to legislate what other men shall do. If this association should vote to adopt and use any other gauge than the metric gauge they never would be able to enforce it among their members unless those members found it for their advantage so to do.

Digitized by Google

Personally, I do not anticipate that everybody is going to lay aside thousandths of an inch, the Brown and Sharpe gauge and the Birmingham gauge and immediately take this up. I know, however, it is only a question of time when some such system of measuring will be used that will do away with all arbitrary numbers, which in themselves convey no idea as to the quantity which you are expressing.

The question of bringing this commercially before this country is a very grave one, and one to which I have not given the attention that I have given to the mathematical properties of the gauge. Of course I have corresponded with all of the wire makers in regard to it, and at the last convention I read a voluminous correspondence from them, the majority approving of this and hoping that it would be carried out.

I propose this afternoon to have this table electrotyped. It will then be the property of the association in electrotype. It can then be cut up, and such portions of it furnished to manufacturers as is thought fit. This gauge goes from the tenth of one millimeter to 10 millimeters which means from about a 38 wire to a No. 00 or No. 000 wire of Brown and Sharpe. It gives a much finer division than either of the other gauges in the larger sizes; in the finest sizes it does not give nearly so fine divisions. In the sizes which would be used in incandescent wiring, it gives much finer properties, and electricians are getting to work finer and finer on the properties of their wires all the time. It is a tendency of the times to do so. As you go up into the larger wires it becomes very marked. In the larger portions of this gauge there are seven, eight or nine numbers instead of the single number of Brown and Sharpe or the Birmingham gauge. I received a number of letters from well meaning persons calling attention to the fact, that in a small portion of this gauge there is too great a variation between the numbers. That is very true; but nobody can tell just what size of wire anybody wants in those small sizes. To tabulate it would be to make a book as big as the dictionary almost; but from the figures given any electrician can calculate the electrical and physical properties of any wire varying in hundredths of a millimeter. All of the data here is necessary for making such computations. I presume in those fine wires if this system is adopted, you will find in the course of a short time that manufacturers will be publishing odd numbers; instead of No. 2 gauge it might be 2.23, which might meet the particular requirements of somebody. Those first 10 numbers will probably receive considerable addition. This will be the basis for determining their physical and electrical properties. In the use of expensive wires—in platinum for example—no man drawing expensive wires can afford to adhere to any particular gauge, because the requirements are so nice in regard to it; but from these tables there is no difficulty in any one determining just what the resistance will be, or the size shall be, or the weight of any wire he wants determined in terms of a hundredth of a millimeter, which is about three times as small a difference as you will find in the thousandth of an inch

I don't know that I have anything more to say. I have made myself extremely disagreeable to a great many people by making them work so much. I have troubled a great many people in regard to it. I called in the best expert testimony which I have been able to get in this country. I have worked the members of the committee night and day. I have put the matter in type. I bring the matter to the association. What will you do with it, gentlemen?

Mr. Eustis—In order to give the association some little idea of the work that has been undertaken by the committee in tabulating this gauge I would mention that on a rough estimate of the number of figures necessary to calculate, it comes out in the neighborhood of 30,000—probably rather more than less; that is, for each separate calculation. Now, as the whole thing has been done three times it would make a nice little figure, very close toward a round 90,000.

Mr. Mailloux—A few friends of mine I see beginning to smile as I get up to say something on the wire gauge question, and probably what makes them smile is the remarkable slowness with which we have been arriving at any sort of conclusion relative to any wire gauge. The committee of the American Institute of Electrical Engineers has had the subject of wire gauge under consideration for a long time—it must be two or three years. There has been more or less interest taken in it by the members of the committee, and efforts to arrive at a determination as to what is proper and expedient. I was very much interested, as being a member of another committee, in the report made by Mr. Garratt, and I think that we should appreciate the care, the precision and the assiduity with which that committee has carried on its work. But at the same time I feel that I must emphasize a point which he himself has alluded to. I am brought to this consideration by remembering that while a gauge may be particularly suited to the requirements of one individual or set of individuals, yet it is of the utmost importance that a gauge in order to become universal, should have the elements of usefulness to all parties who are using gauges. I notice that between the size corresponding to No. 38 of Brown and Sharpe gauge and No. 32, he has only one number; there is only a difference of a tenth of a millimeter. Now, those who are in the telegraph business and the telephone business and many other cognate industries would see at once a very grave objection. It is true, as Mr. Garratt proposes, that we may have several sizes—smaller sizes in tenths of a tenth of a millimeter; but if we begin to introduce the sub-division of the scale it seems to me that we might just as well have no scale at all and revert to the principal of determining the diameter by the thickness in the first place, irrespective of any number or of any gauge for that matter. As you all know, it is a common practice in this country and there seems to be a large preponderance of sentiment in favor of determining the size of wire by thousandths of an inch. The difference in the use of systems of measurement is one which has full weight, of course. At the same time we must not forget that in this country we are, so to speak, married to the old system of the inch, and that there is only a very small proportion of the people who really understand the metric system or could use it intelligently; and therefore it looks to me, that while the system is very well adapted indeed to the requirements of the electric light industry insomuch as it affords a long range of sizes differing from each other by very much smaller differences than the gauges at present in use, yet, as we get to the small end of the scale it is as far deficient as it is redundant at the large end.

After due consideration of all these points, the wire gauge committee of the electrical engineers, which include a celebrated engineer, an officer of the United States army, in the engineering corps, a trained mathematician, has come to the conclusion that no gauge in which the sizes are defined by equal increments of diameter can ever hope to meet the requirements of the general body of electrical industry, and if we look into the matter closely, we shall find that the gauges at present in use have after all a great deal of convenience, and that a rational gauge based on the principle now imperfectly carried out in existing gauges would at least be entitled to some consideration before voting to adopt definitely and inflict upon the community another gauge of any kind. I say inflict, not because I wish to disparage the very able work that has been done by our committee, but because to add another official gauge to the number already existing would be to increase the perplexity with which we are now so greatly troubled in trying to make calculations regarding wire.

The basis, I think, of a proper gauge would be an asymptotic one—a gauge in which the sizes of wire vary with the resistance or the sectional area as a function, as a variable quantity, so that the ratio would be represented by a curve which is hyperbolic, somewhat like the curve of the present Brown and Sharpe gauge. In that case, as it will readily appear, it would be possible to represent all the numbers of gauges by formulæ.

Mr. Garratt—Will the gentleman kindly give an example in gauge calculation which an unintelligent man could make on the Brown and Sharpe gauge or the Birmingham gauge, which he could not make by measuring wire by the diameters in tenths of a millimeter? He made the statement that the metrical system was unfamiliar to the general run of people, and therefore they could not use it with the facility with which they could use the Brown and Sharpe gauge. Will he kindly give me such an example, or will he state one off the board himself.

Mr. Mailloux—I think that in practice the men that Mr. Garratt refers to, the linemen, would not go to the trouble of multiplying, because a great many of them could not multiply two quantities of two figures each.

Mr. Garratt—I will say in regard to an asymptotic gauge that I corresponded as far as I could with every maker and user of wire in this country and abroad, and I found just one gentleman who advocated it, and he was a distinguished mathematician in the United States army—Captain Michaelis, of Troy. I corresponded with him on the subject and we could not come to any very good understanding. The asymptotic curve is the property of a tangent to a parabola at infinite distance. I did not find any other man in the United States—I have now found another—who advocates such a gauge.

Mr. Mailloux—I think the question bears more on what people have been doing and on what we can make them do. I have no doubt it is easy enough to make a far more scientific gauge than people could use. We have the experience of this country in the slowness with which it has adopted the metric system. I prefer the metric system to all others and use it a great deal. I believe that in chemical work it is the only system by which satisfactory work can be done. But at the same time I note that it is not going into use with very great rapidity. I note on the other hand that it is being adopted in this country with great slowness, and I doubt if the present generation will ever see the metric system in use in this country. What I have reference to is that as people are accustomed to gauging thickness by a certain method we must not give them something which is so radically different that we shall make people object to it

Mr. Garratt—I did not understand that the work of this committee was to consider the peculiarity of men's minds. I was instructed six months ago that the reports of the last committee

Digitized by Google

was accepted. That report embodied the proposal that we lay aside the British standard gauge and accept the metric measuring of wire. The work of this last six months has simply been to put that into a suitable mathematical shape. I understand that that is the report of this committee. I am not reporting on what I think people will do. I am reporting on the mathematical properties of the system of measuring which was adopted six months ago. As I say, the United States government has adopted the metric system. As a professional chemist I agree with Mr. Mailloux in his statement that it is the only system for use in chemistry. If he had calculated as much in connection with wire as I have he would realize the extreme facility of making such calculations. The unit of a hundredth of a millimeter seems peculiarly adapted to fine instruments of precision. The ten thousandth of an inch is too fine, but the hundredth of a millimeter seems to be just about the limit of ordinarily fine measuring apparatus like the micrometer screw, which all electricians use in their calculations.

Dr. Moses—I feel a certain diffidence in speaking on this subject from the fact that my name appears on that committee as a member of it. I would say that though I am a member all of the credit of the work is due in varying proportions to the other members on the committee. The honor of being put there was one that I appreciated, and when called upon to do my share of the work I was unfortunately sick, and since then I have been abroad and have not been able in the last few weeks to participate in the labors of the committee. I feel, too, as if I ought to give the meed of praise to my co-members on that committee for the very comprehensive and laborious work that they have accomplished. I also feel as if I should say in view of the probable adoption of the report, that the metric system is one so well known and so generally used at present that there is no necessity for us to advocate it as a standard. The government has done so already. Other governments, even the German government, opposed as they are to the French, have in a certain disguise adopted the metric system; they were forced to do it; so that we must for the present not consider the advisability of adopting the metric system, because it forces itself upon us, and if we acknowledge it we simply acknowledge the inevitable. But there is some weight in a remark made by Mr. Mailloux that I would like to call attention to, and Mr. Garratt sounded the key-note for it when he said it was impossible to consider any standard of conductivity because it was something that varied with all of the commercial makers of wire. It is a very important thing that there should be some standard always, but where you have the essential standard always varying it is very difficult to fix it. But we have in the use of the units themselves the adoption of the metric system. We are employing them constantly for all the varying moods and tenses of the current, and why may we not adapt them to the uses of the consumers of wire since, ultimately, what is to be determined is the resistance of the wire—since it is the resistance of the wire, entirely independent of the material, that has to be calculated by the electrician, it is of the utmost importance that we should be able to calculate the resistance rapidly. Now the resistance varies in any two specimens of wire. I take a wire; it measures such and such resistance; I twist it accidentally—it measures a different resistance. So we have to take something as we find it and determine what we have or what we want. Now I do not like to speak always in prophetic mood; but I think the day is not far distant when we shall have measures of resistance that will be as portable as a Brown and Sharpe wire gauge. I think that we will be able to take an ordinary lineman and give him this instrument and let him say such and such is the resistance measured on a dial, if you please, of such and such a length, measured for him and in the nature of the instrument itself constant and independent of his erroneous observations. He takes a certain resistance of a certain unit, and if he can multiply—and he has probably been taught how to multiply, though he has not a very extended mathematical knowledge—he can multiply that, and let the unit be an inch a yard a metre—anything you please, he simply multiplies it by the number of units that he wishes to multiply by, and he has his result accurately given. Now I do not say that that machine is invented, but I say that it is possible to invent such a machine and to make it most exact and very portable. Now it is immaterial to me whether my wire is iron or gold, or silver, or whether it has a conductivity of A, B, C or D, as long as I get the greatest amount of conductivity for the least amount of resistance reciprocally for a given weight in hard cash. That is all I want to determine. When once that is determined, why, I give my order to Tom, Dick or Harry, and the man who gives me the most conductivity for the least money gets my order. It is quite immaterial to me whether it is No. 38 or No. 32. The question is—What is the resistance and what is the cost? Now those things will settle themselves the instant we have a little piece of apparatus by which we can take a unit of length and determine its resistance, and let that be done by the most uneducated person.

Mr. Mason—If I understand Mr. Garratt rightly, he states that one matter was decided at the last annual meeting of the association—namely, that the association adopt this system.

Mr. Garratt, accepted it.

Mr. Mason accepted this system—I would like to ask the chair to inform us where it leaves us now. As I understood from Mr. Garratt the committee was continued to perform certain clerical work. If that is so, it is simply for us to determine whether or not they have done their work. If I understood him correctly, we are not called upon now to discuss the question of this or that gauge, but of the quality of this work and whether we will accept these tables.

The President—(Reading from the minutes of the last convention). "Mr. Powers, of Troy, made a motion that the matter should be left in the hands of the committee for a further term, and that the committee be increased to five, with instructions to report further at the next semi-annual convention, and that in the meantime the report of the committee be accepted (the report was accepted and placed on file), and such suggestions as they made be carried out in regard to printing copies, so as to enable the members of this association to familiarize themselves with the new gauge in case it should be adopted at the next meeting." Now, is the case thoroughly understood? The fact is, the matter was referred back to the committee, and it has come up in the shape of a report.

Mr. Lynch—I would like to suggest that Mr. Garratt add to his already very excellent report a column showing the safe current carrying capacity of the wires at different temperatures. It would be a feature for our country members that would be very acceptable to them.

Mr. Garratt—I would simply say it is necessary to multiply the figures in the table of areas by a sinple constant. I believe that Sir William Thomson found that in the British navy the safe limit should be one-and-a-half amperes to the millimeter in section.

Mr. Steuart—I have heard what has been said for and against the report of this committee, and I would add my voice to what Dr. Moses and others have stated in commendation of the admirable work done by the committee. They have gone into the subject most laboriously and intelligently, and I think the least we can do under the circumstances is to adopt the report of the committee. They were appointed a year ago; they have gone through the subject as thoroughly and laboriously as possible; they have given us the benefit of the work done, and they have produced it here in a most intelligent and thorough way, and I would, therefore, move that the report of the committee be adopted.

Mr. Lynch—I second the motion.

Mr. Phelps—I would like to ask what the significance would be of adopting the report. Will the association be committed to promulgate this as a wire gauge and recommend its adoption as a wire gauge or not? Much has been said, but too much can not be said, of the value of this work. Mr. Garratt and his co-adjutors have completed their——

The President—I will answer that question of yours first. If this report be adopted, then this association pledges itself, and its members pledge themselves, or each one pledges himself individually, to carry out the law laid down by this report. You may call it whatever you please; but this committee reports a method for measuring wire which we will adopt if we adopt the report.

Mr. Phelps—The key to what I was going to say was furnished by Mr. Garratt in his remarks a little while ago when he said, "There is no gauge." It is an infinitely useful compilation. A useful system is here provided for ordering wires by diameter, and a great step, in my judgment, is taken and gained in using metric diameters instead of inch diameters. But I should hesitate to assist in promulgating a wire gauge I think if we look the matter well over, in view of Mr. Garratt's remark that there is no gauge, unless you choose to call it so, but an almost infinitely useful aid to the manufacturer and orderer of wire, that if the association can promulgate this information in a way to make it useful to everybody having to make, buy or use wire, and by so doing put a peg in towards the further use of the metric system, that, it seems to me, will be a useful thing to do; but do not let us call it a new wire gauge. We have more wire gauges than we want. You see my idea, Mr. President? I would like to hear from Mr. Garratt.

Mr. Garratt—There is no wire gauge about it. If I understand the matter right, the electric arc light men will use a definite number of wire, perhaps; the incandescent men will use a certain other definite number; the men who make hairpins will use another number. They will have those sizes, and it doesn't make any difference whether you express them in tenths of a millimeter, in thousandths of an inch, or any other measure you see fit. All that I advocate is that we express the size of the wire we use in the metric system and not by an arbitrary number which means nothing.

Mr. Phelps—It is very gratifying to know that the practice of ordering wire by diameter has been constantly growing of late years. It has been found a sort of a necessity by people who require wire of any accuracy. Part of the work has already been

Digitized by Google

done. We are accustomed to ordering by diameter, but mostly use thousandths of an inch. This information will enable people to use a better unit of diameter, and that is the main function of it, and the information supplied here of the mathematical properties of wires, based upon their diameters in metric units, is something we have not had before, and should prove infinitely useful.

Mr. Garratt—If you introduce an asymptotic curve, you are introducing the question of high mathematics again, you are plunging us again into a new gauge, you are plunging us into something that is purely arbitrary. It will be a laborious thing for thousands of people in the United States. We measure ground by feet and rods; we measure length by thousand feet; why not express our wires in diameters and by the metric system.

The President—I suggest to the association that you make this the special order for a fixed hour on Thursday, and that will give the gentlemen an opportunity of studying the details and coming intelligently up to the work again.

Mr. Mason—I move that this matter be laid on the table and be the special order for the opening of Thursday's session.

The motion was carried.

The President—In the absence of Mr. Slattery, who was to have read a paper on electrical distribution by means of alternating currents, we will take up the partial report made by the committee on insulation and construction of plant.

Mr. Robertson—I would like just a word here in reference to that report as a member of that committee. I have read a rough draft of the partial report the committee has made, and not being able to endorse the report before it is presented to the convention, I would say that the committee as a whole have resigned from the work, and as I could not endorse what they said, I would not resign with them. Finding myself in a small minority, not even a fighting minority, I would ask you to accept my resignation.

The President—Gentlemen of the association, you have the verbal resignation of Mr. Robertson before you. He begs to tender his resignation as a member of the committee on proper insulation of wires and proper installation and construction of plant. The reason he gives for that is that he is unable to subscribe his name to the contents of this partial report. Therefore, he tenders his resignation. What will you do with the resignation?

A Member—I move that the resignation be accepted.

The president put the question, but no one voted.

The President—Gentlemen of the convention, you are here to perform whatever duty is assigned to you in the regular order of the work. No man need be ashamed to vote on anything. Every man should have an opinion of some sort, and he should be able to express that fearlessly. Again I put the question.

Mr. Garratt—We do not understand what Mr. Robertson resigns from.

The President—He offers his resignation from the committee on proper insulation of wires and proper installation and construction of plant.

Mr. DeCamp—Mr. Robertson is in a very awkward position. He is in so small a minority that he feels it would be presumptuous for him, I suppose, to make a report——

Mr. Robertson—No, sir; I would like to reply to Mr. DeCamp in that matter, and say that I received a rough draft of the partial report late on Monday, and therefore could only study through it hastily, and supposing they were going to make a report, until yesterday I was totally unprepared to make any report whatever. I beg that you will accept my resignation and let me out of the scrape.

The President—I think it is only fair that the resignation be accepted or rejected. Again I place the question before you.

The motion to accept Mr. Robertson's resignation was then carried.

The President—Before placing this paper in the hands of the secretary to be read, I beg to say that on a date which I am unable to find in the correspondence this committee, either all six or one of its members, perhaps more, wrote to me, asking that the National Electric Light Association furnish them with a fund of $1,000 to carry on their investigations, guaranteeing the cost of repair to any apparatus that might be damaged in the course of their investigations—apparatus which was to be supplied to them from the University of Pennsylvania—also, that an assistant be furnished at $3 a day. I laid that correspondence before the executive committee which met in Boston on June 9th. The committee found only one course open to them. The funds of this association are applied to its running expenses, with which you are all familiar. There was no such sum on hand to be turned over to the committee. Nothing more was heard from the committee until this paper, with quite a column of printed matter, was sent in on yesterday or the day before to the National Electric Light Association. Now, this paper is signed by Edwin J. Houston, chairman, William D. Marks, Carl Hering, and M. M. Garver, and is not signed by Mr. Robertson, and the reason he gave for his resignation, independently of this paper, was that he could not subscribe to the subject-matter contained in this report.

The report was then read by the secretary as follows:

REPORT OF THE COMMITTEE "ON PROPER INSULATION OF WIRES AND PROPER INSTALLATION AND CONSTRUCTION OF PLANTS."

The committee appointed by your honorable body hereby respectfully submit the following report:

The rapid growth of the electric lighting interests during the last decade, the large investments already made in such interests, together with the still greater growth that is probable in the near future, have strongly impressed your committee with the important nature of the work entrusted to them.

Your committee fully recognized the fact that any report to an association that represents the leading electric interests of the country, would naturally be expected to be of a thorough character; they therefore determined as far as lay in their power to spare no labor in the performance of their work.

The duties charged on the committee naturally divide themselves into two general classes, viz.:

First. The proper insulation of the wires or leading conductors.

Second. The proper installation and construction of the plant as far as relates to the insulation and protection of the machines, lamps, conductors and accessories, and to the safety of consumers, attendants and buildings

The first branch necessitates an exhaustive and carefully planned series of practical tests as to the insulation of the leading wires; the second, the preparation of a code of rules, based on actual experience for the general installation of the plant, both so far as concerns the insulation thereof, and for its protection, as well as that of the consumers, attendants and buildings; or, in other words, to provide for such an installation of the plant as will best insure the protection of life and property.

Referring to the first branch of its work, your committee appreciate the fact that a mere theoretical discussion of the subject would prove of but little value to an association composed of men practically engaged in electric lighting.

They are aware that considerable valuable data have already been accumulated concerning the high insulation required for telegraphic cables, especially submarine. They are also aware that laboratory tests have been made of ordinary electric wires. These data, however, either refer to conductors not included in the scope of your committee's investigations, or though referring to electric light conductors, have been made under conditions that would render them of but little practical value in this connection.

Your committee therefore planned to make a careful series of practical tests under conditions as nearly as possible similar to those to which the conductors are actually subjected in existing installations.

The committee determined to limit the investigations chiefly to the leads that are ordinarily used in arc and incandescent lighting, subjecting them during such tests, as nearly as possible, to the various disturbing or other conditions that are met with in actual practice. They hoped by these means not only to obtain data by which the relative commercial efficiency of the different wires in the market could be determined, but also possibly to lead to the determination of the best conditions to be observed in the manufacture of insulated wire, in order to insure the production of the most serviceable material.

Tests, such as those contemplated, and of necessity required by the character of the work, not only called for excessive labors on the part of the committee, but also for the use of specially designed apparatus. Although the committee had the use of the well equipped electrical laboratory of the University of Pennsylvania, kindly placed at their disposal by Prof. Marks, one of the committee, and the use of valuable apparatus belonging to other members of the committee, additional apparatus was required, which, if specially designed, must be purchased, or if of existing types, must be borrowed. Then, too, the services of an assistant were required to start and look after the fire for the steam engine, clean out the boiler, run circuits, and do such other work as the committee could not be expected to do.

In order to obtain for these tests currents similar to those used in actual practice, various dynamo-electric machines would necessarily have to be borrowed. In view of these facts, the committee deemed it but fair to request the association to guarantee a sum sufficient to meet actual expenditures; and, further, to assume responsibilities for apparatus loaned to the committee, feeling sure that the association could hardly expect the committee to assume such expense in carrying out work of the character intrusted to them. This request, the committee were informed by your representatives, could not be entertained. The committee are therefore forced to resign.

Desiring, however, to give to the association such incomplete parts of their work as represented the results of their labors up to this time, they beg leave to submit the following incomplete report:

1st. On the preliminary code proposed for the tests on insulation of the conductors, etc.

2d. On an incomplete draught of a preparatory code of rules and regulations for the installation of an electric plant intended

Digitized by Google

to serve as a basis of experiment by the committee, and to be sent in printed form to the various electric companies and insurance interests for comment and criticism, before finally being submitted to the association.

As regards the preliminary code of tests, however, your committee wish it to be distinctly understood that they recognize the fact that preliminary tests on such code would, in all probability, show the code to be impracticable in certain portions, or at least to need modifications or additions.

In the preparation of the following preliminary code the committee bore in mind that leads possessing the requisite durability and efficiency for electric work should possess as far as possible, the following requisites, viz. :

1st. High insulation.
2d. Impermeability to moisture.
3d. Incombustibility.

In this view we submit the following preliminary code for tests, subject to the changes, modifications or extensions already referred to.

PRELIMINARY CODE.

(1.) *Leakage Tests.* (*Arc Wires.*) A definite length of insulated arc light wire to be immersed all but the ends in water. The water is connected to one pole and the copper to the other pole of a machine giving 3,000 volts, which is assumed to be the highest electromotive force ever used in practice. The leakage from the copper through the insulation to be continuously measured by a suitable ampere meter, the measurements beginning immediately on the immersion of the wires, and the tests to be stopped when the leakage reaches a certain definite amount. The greater or less rapidity of increase of leakage may then be assumed to indicate the less or greater value of the insulation.

(*Incandescent Wires.*) Incandescent wires will be subjected to similar tests, differing only in the voltage to which the insulation is to be subjected which will be in the neighborhood of from 100 to 150 volts, since, as it is known, at a voltage of say 60 volts moisture does not seriously interfere with ordinary underwriters' wire, while a somewhat higher voltage will set fire to wood through underwriters' insulation.

(2.) *Absorption Tests.* Coils of wire of definite length are immersed in water, and their ability to resist penetration or absorption thereof, will be measured by the increase in weight after equal duration of immersion.

(3.) *Frost Tests.* The ability of the insulation to resist the disintegrating effects of frost, on the alternate freezing and melting of the absorbed moisture, will be tested by the similar effects produced by the alternate absorption and crystallization of a solution of some chemically inert salt, such as magnesium sulphate. After the wires have been subjected to the frost tests (3), the leakage tests (1), and the absorption tests (2) will be repeated.

(4.) *Flexibility of Insulation.* A definite length of wire will be wound around a small cylindrical rod, say one inch in diameter, after which the leakage and absorption tests (1) and (2) will again be repeated.

(5.) *Abrasion Tests.* A definite length of wire will be bent in the form of an inverted U, having a given radius of curvature, and will be hung over a wheel, such for instance as a gear wheel having polished teeth with rounded edges, and heavy weights will be attached to the two ends of the wire. The wheel will then be turned and the number of turns noted before electrical contact is made between the copper of the wire and the metal wheel.

(6.) *Adhesion of the Insulation.* A definite length of wire is bared of its insulation at one extremity, and the bared end passed through a closely-fitting hole in a die plate. A measured pull is then exerted on the bare end of the wire until a definite length of the insulation is stripped off the wire.

(7.) *Refractory Qualities of the Insulation.* The current will be passed through given specimens of the wire and increased in quantity until the insulation is destroyed and the nature of the destruction noted, whether in the form of flame, charring, etc., etc.

(8.) *Igniton Tests.* The ability of the insulation to resist ignition by some external source of heat similarly applied to all the wires, and the rapidity with which the flame, started at one point, travels along the wire, will be carefully noted.

Besides the foregoing tests as to the quality of the insulation, the committee also proposed testing the conductivity and flexibility of the copper, as follows, viz. :

(9.) *Conductivity Tests.* The conductivity of the copper will be measured, assuming the wire to have the diameter claimed by the makers.

(10.) *Flexibility Tests.* A given piece of wire will be bent repeatedly backwards and forwards around a templet, curved to a quadrant of say one inch radius, the number of bendings required to break it being noted. In order to procure wire of the same quality as that commercially sold in the open market, it was proposed to purchase the specimens tested in the open market direct from the makers.

The second duty charged on the committee was, as already stated, the preparation of a code of rules, based on actual experience, for the general installation of plants, both so far as concerns the insulation thereof, and for the protection of the plant, consumers, attendants and buildings. The importance of a code of rules of this character, relating as it does to the better protection of life and property, is generally recognized, both by electric lighting and insurance interests. It is to the true interests of the electric lighting companies to assure the public that not only can they through electricity furnish a steady, reliable and cheap illuminant, but that such illuminant if intelligently employed under certain well considered regulations, is as safe, indeed far safer, than any other artificial illuminant. While, therefore, electric lighting companies should not hesitate at the adoption of the most stringent regulations that experience has found necessary for the protection of either life or property, it is of course advisable that all arbitrary and meaningless regulations should be carefully considered before their adoption by the National Electric Light Association. It has, therefore, been the aim of your committee to obtain a code acceptable alike to electric lighting and insurance interests.

As preparatory to the framing of such a code of rules, the committee planned the following work, viz.:

1st. The preparation of a compilation of existing rules.

2d. Obtaining the opinions of the principal electric light and insurance companies, as to the practicability of existing rules, and requesting suggestions of such changes or additions, if any, their experience might suggest.

3d. Conducting a series of experiments so as to determine, as far as practicable, reliable data on which a code could be deduced affording the widest latitude to electric light and power companies consistent with absolute safety to life and property.

4th. From the above to deduce a code to be regarded as a preliminary code.

5th. To have printed copies of such preliminary code sent to all electric light and insurance companies for comment and criticism.

6th. To prepare, finally, a code to be submitted to the National Electric Light Association of America.

In carrying out this branch of its work, the committee has addressed letters to electric lighting and insurance interests, asking for copies of existing rules, etc. To a certain extent these letters have been answered and copies of existing rules and regulations (though by no means complete), have been received, and the committee had commenced a compilation of the same. In the desire of aiding the association, they hereby respectfully submit such incomplete collection and compilation.

Being forced to abandon their work by reason of the failure of the association to make the appropriation necessary to carry out the same, the committee hereby submit the above incomplete report, and respectfully offer their resignations as members of the committee, and request that they be relieved from any further work in the matter. Respectfully submitted,

EDWIN J. HOUSTON, *Chairman.*
WM. D. MARKS,
CARL HERING,
M. M. GARVER.

The President—No exhaustive tests were made by this committee at all. They had completed their work to a point where they required financial aid to carry it on. They applied to the association for that aid. The association was unable to give it, and the committee present this report and resign. It is put in plain and unmistakable language, so that you may know that if you want any further work done you will have to pay for it. The paper is open for discussion or for whatever disposition you choose to make of it.

Mr. Eustis—We have had some little experience in wire. A good many years ago, when I was with the Bell telephone company, I decided to test a wire there, and made out a report of the wire. It tested splendidly after soaking for about two weeks. I made out my report, but fortunately it was not handed in. I put the wire up on the shelf, and glancing at it, I saw that the insulation was cracked from one end to the other, showing that while the wire might test perfectly well while still wet, after it had dried out a trifle it was absolutely useless. For practical working that of course is a strong point—that a wire should last and not become oxydized and cracked. There is also the other question, which I think should be brought up here, and that is the question of mechanical injury to the covering—abrasion. We all know wires are strung where they are liable to swing against awnings, the fronts of houses, trees, and so forth. That I think is also a question which should be brought up here.

Mr. Mason—I suppose we must decide this question now, whether money shall be appropriated for such an object. I do not suppose, Mr. President, that another committee could be found who would undertake the work which this committee has declined to pursue, and undertake it at their own expense. It seems to me that we should bear the necessary expense of making tests, the results of which would be so valuable to the members of this association. I move that the resignations of this committee be accepted and that their partial report be also accepted, proposing to move later the appointment of a new com-

Digitized by Google

mittee and the appropriation of a suitable amount of money to enable them to carry out such plans as they shall deem wise for the determination of the end sought by the committee whose resignations are now offered.

The motion was seconded.

Mr. Leggett offered, as an amendment, a motion that the report, which is admittedly incomplete, and for which the committee would not probably want to make themselves responsible, or the convention desire to adopt, be laid on the table.

The motion was seconded and carried.

The President—The Boston Electric Club have extended an invitation to the members of this association to attend a banquet to be given on Wednesday night at Point of Pines, and they request that the members of the association call at room No. 14, to notify their acceptance of this invitation.

The convention adjourned until half-past two o'clock P.M.

AFTERNOON SESSION.

The President—The first business of the afternoon session is the report of the committee on electrical distribution by means of the alternating currents.

Mr. Slattery—I regret to have to announce the absence of our very able chairman who had to report upon this important subject, secondary generators. In his absence, that duty devolves upon me and I feel the onus of the obligation involved of doing justice to a subject which is fraught with a great many perplexities.

Mr. Slattery then read the report of the committee. (See page 344.)

The President—Gentlemen, Mr. Slattery's paper is now before you for discussion.

Mr. Slattery—If I might make a suggestion, sir, we have our old friend Mr. Duncan present, who is fully charged with alternating effects this afternoon, and we shall be very pleased to receive a shock from him.

Mr. Duncan—I am not very well charged to-day. It has been a very fatiguing day for me, The atmosphere of this room is not such as was represented by the Mayor of Boston. In regard to the alternating current system, I have simply to say that there is no question about the practical and efficient working of that system. There have been some things which required a practical demonstration to bring them out, and there are some things about the system yet which are not fully solved, but which are being rapidly evolved. There is no question about the covering of a given space and the distribution of a large number of lights much more economically than by a direct system. Now in regard to the difficulties suggested by Mr. Slattery, those are questions which are gradually working themselves out, as he stated in his excellent paper. One of the difficulties which was first encountered, as he says, was the induction box itself, but practical experience of four months in the use of that box has been such as to show that in every respect it is entirely efficient, entirely satisfactory, and that it can be relied upon, placed in any position, to do its work effectually and efficiently.

In regard to the dynamo, he has gone through that part of it. Some heat is naturally generated in any dynamo. I do not know that I can say that we get any more heat from the alternating current dynamo than we do from the regular arc light dynamo; I do not think we get much less; I know we do not get a great deal more. In the heating of the parts in the original machines that were made there was considerable difficulty. Insulation has been provided from time to time, and at the present time I know of machines which have run successfully for three months to which nothing has ever been done. Some of those machines will average in a week's run 24 hours per day, except Sunday, and they will be shut down on Sunday for about two hours.

Mr. Smith (Allegheny City Light Co.)—Mr. President, I would say that I have had some experience with the alternating system in the same company with which Mr. Duncan is connected, and also with another company in Philadelphia, where we started first with the direct system and changed it to the alternating. Some of the points on which Mr. Slattery has asked for information I may be able to give some light upon. We have found that where we are using the converter system its enormous flexibility enables us to apply almost any system of placing the converters. In one of our stations in Pittsburg where we rent lights in a poor neighborhood where the majority of places would take but three or four or five lamps, we found it cheaper to place the converters on the poles, using either 50 volt or 100 volt lamps, as we pleased. In other parts of the town, where we found buildings taking ten, fifteen or twenty lights, we found it better to take the high tension right into the building and place the converter in the cellar or the garret. In some cases, we have a mixture of the systems. For watchmen's lights we have both the secondary main outside and the converters directly in the building. In very large buildings we carried the high pressure through the building and tapped to our converters wherever convenient. In the case of hotels, we have a high pressure wire down to the centre of the corridor, and in the case of a large parlor being lighted, we would put a converter into that parlor. In the case of a row of bedrooms requiring twenty lights, we would put in a twenty light converter. Without the slightest trouble we change buildings having three or four hundred lights from one system to the other without cutting off the lights for a moment, by cutting up the existing wires as they exist in sections and tapping in the converters one after another as we needed them. Whenever we wished to change a section we would substitute our 50 volt lamps for 100 volt lamps. When we had all the lamps changed in a building we would splice up where we had cut. In a building having 300 lamps we only put in converter capacity for 200, knowing that no more than 200 lights would be burned at one time.

As regards the danger of shocks I have had a little experience on both sides. I have had a full share of the arc light shock. I opened circuit on 1,500 volts, which was sufficient for me. I have also taken a thousand volts alternating, and there is no comparison between the shocks at all. If I may be allowed to give my own experience, I should say that the Thomson-Houston machine gives about the most tremendous blow I have ever felt. It is a peculiar dead stroke which you do not find in the Brush machine. But the alternating machine seems to throw you off instantly; you do not have time to take hold. We had a case in Philadelphia the other day, which I think will be interesting to Mr. DeCamp, as I believe he feared it was one of his men. We had been changing a building from direct to alternating, and while the building was still on the direct current, one of our wire men went into the cellar and put an ordinary key socket on to the mains to give him light. After the building had been changed to the alternating system one of these wires which had been used originally, became a dead wire and the lamp having been taken out of the socket there was no current passing through the wire. One of our men went down stairs to make some changes and our foreman cautioned him particularly to look out for those alternating current wires, as one of them was grounded. Two of the men went down together and one of them forgetting that the thing had been changed to alternating went feeling around to get hold of this socket, and he found it and he laid down on the wet ground and the other man stumbled over him and spoke to him but received no answer and spoke to him again. He stooped and looked at him and finding that he was growing black in the face ran off to call for help. He ran down to the station and while there learned that the foreman had gone to another building and he ran after him. By the time he found him and got back the foreman told him that the moment he heard something was wrong there he knew what it was. He ran down to the cellar and found this man lying on his back perfectly still and blue in the face. He stooped down and shook him and got a terrific shock himself. He saw that he still had hold of the socket, and using his coat so that he would not get the shock himself, pulled the wire out of the man's hand and then they picked him up. He had been then on the current, as near as we could estimate, four minutes, taking the full benefit of a thousand volt current. The men did not know what to do, but fortunately treated him for asphyxia. The man was blue in the face. They cut his clothes open and dashed water on him and tried artificial respiration, and in the meantime sent for an ambulance. By the time the ambulance got there, he was sitting up and refused to get into the ambulance and seemed to be very much disgusted that an old arc light man like himself should be keeled over in that way by an alternating current. The next day he expressed himself as perfectly well and ready to go to work. We had some difficulty in getting him to go and see the doctor, but we insisted on it. We were more afraid of the nervous shock than anything else. The man told us that for two minutes at least, of the time he was on the wire he was perfectly conscious, that he knew his companion was there and he tried to tell him to pull the wire away, but he could not speak, and that when the man went away he knew perfectly well he had gone for assistance and then realized that it would be three or four minutes before he got back, and he thought to himself that he could not stand it that length of time, and then he forgot everything. He said that he felt no particular pain. He got a shock that he would get from any electric current, when he first laid hold of the socket, but after that he felt nothing. The sensation seemed to be like that of drowning. As soon as we got him to gasp and breathe, his color came back again. This incident has given me quite a new hold on the alternating current system—to know that you can take 1,000 volts of it and stay on it that length of time. I know I should be very sorry to take a direct current, one quarter of that time.

As to the question of heating up machines, the newer machines, such as we are using now, I may say that we run them for a week, starting on Sunday afternoon and running until Sunday morning. A machine runs from nothing—an amount which you cannot read—to 35 or 40 amperes, and in all that time, it never gets so hot that you cannot bear your hand upon it with comfort. As to the larger size machines that we are using in Pittsburg—we have one there that has been running

Digitized by Google

two months—a 1,300 light machine—running 22¾ hours a day; we only stop for ten minutes and if the engineer does not feel like it, he doesn't stop then. The load on that varies from nothing up to 65 or 70 amperes. You can always bear your hand on the machine, and as long as you can bear your hand on it it is certainly not hot enough to injure any good insulation. The converters we know absolutely nothing about. We put them in and that is the end of it. I think we had to take two out on account of the blowing out of the plugs. The secondaries were short circuited, the effect of which is generally to blow out the primary plug. It does not injure the converter as far as we have been able to find. We have never had a case of a converter short circuiting either in the primary or the secondary. We have occasionally had a converter terribly overloaded, when it will heat up and finally blow the plugs through another converter which is tapped in on the secondary wire. It is hard to get linemen to understand that where two converters are coupled together and one of them gets hot it is usually the other converter that is at fault. I am a little of an enthusiast on the subject of alternating currents, as in Pittsburg we are using the direct system multiple arc and we have been struggling with 0000 wire, pulling our poles out of line, and the direct current machine burning armatures. In Pittsburg we put them to very severe duty, owing to the suddenness with which storms come up there. I have known a current in our station to jump from 300 to 2,000 lamps inside of fifteen minutes. Taking the two systems into account, the ease of distribution and the ease of handling, I say that the alternating system is bound to come, if for nothing else for the enormous reduction it makes in the cost of running your station.

Dr. Moses—I am very well pleased to hear some of the details Mr. Smith has mentioned. I feel myself a little responsible for the success of that system, inasmuch as I formerly *thought* it would succeed, and now I *want* it to succeed. The alternating current machine which I saw at Pittsburg was running very well and had only been running for one month when I made that report to the last convention, six months ago—as my neighbor facetiously remarks, that very extraordinary report. However, I have just returned from abroad and thought that before coming here I could not spend two days necessary to get over the *mal de mer* better than in going to Pittsburg and seeing how that machine was running. I am very happy to say that the same machine is running in that station in South Pittsburg that Mr. Smith speaks of, with this additional fact, that they have doubled up all around in their capacity—not doubling, however, that solitary man that Mr. Weeks saw there when he meandered through Pittsburg and looked at the alternating current system. The same man was there. They had doubled up the capacity, but that same one man was running it, and I did not see that he had any more work to do then he had before. They were running 3,000 lights where before they had been running 1,500. While wandering through Pittsburg and seeing thousands and tens of thousands of incandescent lights which they have about in all directions, I noted the progress that had been made by the principal company there engaged in the alternating current system, and I saw one thing there that I would like to call to the attention of this convention as being one of the most important things in connection with the development of alternating electric lighting that I have yet seen or heard of. When I went there six months ago they were making machines of 500 to 1,000 lights. The other day when I went up there, I saw a 2,500 light machine running and doing its work admirably well.

Mr. Kimball—In regard to the alternating system of supplying incandescent lights, since the last convention in Philadelphia, there has been a marked advance, and from the various installations which are at present in operation, we have been able to get data which are not only interesting, but useful, and the question of insulation of the high potential wires is one which appeals to every one in every part of electric lighting stations, whether in the lineman or the central station manager. In one case it is life and limb; in the other it is property.

The question of the insulation between the primary and the secondary of the induction coil is one which is governed by a variety of causes. Where converters are placed out of doors, moisture will get in and grounds will develop on the high tension wires, no matter how carefully the poles may be wired, or, possibly, we may have ground wires, and this bold expedient of grounding the inside wiring by heavy metallic lines to the ground has been brought to the attention of this convention before and has been published in some of the electrical papers, and it seems to me that opens a field for discussion. The fact must be appreciated that each system of incandescent wiring from a converter inside a building is entirely separate and completely isolated from every other piece of wiring in the city or town, and that running a metallic ground from one wire to the earth is not to be compared with grounding a positive wire by distribution from 75 or 100 volts, and in such cases should danger develop, being only on one wire, the lead fuse can give way to an excess of current on either positive or negative that in any way affected the other installation, and in such way give warning of danger whether in the converter or in defective wiring.

Mr. DeCamp—In the report read by Mr. Slattery, he speaks very positively about the difficulty of insulating for this current. On the other hand he notes that the effect of the current upon a person – and he is corroborated in this by Mr. Smith—is not as great as it is on the direct current. That struck me as being a little inconsistent. The electromotive force, as I understand it, is a very strong element to guard against in making installations. It is what affects the human body. I would like to have an explanation of that.

There is another thing I would like to know. The peculiarity of this current is such that the close proximity of conductors to each other is going to affect the currents or going to affect the insulation, making it more or less difficult to insulate. As an explanation of why I want to know that, I would say that we are about to run an alternating circuit underground in the city of Philadelphia through an iron conduit. Those are things we have got to contend with. Now, shall we make that conductor of an insulation that requires a second metallic covering such as lead? Do we lessen or do we increase our difficulties by so doing?

Mr. Slattery—Upon that point I would beg to refer to Messrs. Westinghouse, who are in that line, and who can give us some valuable information with regard to these special methods of insulation, and I defer to them as having a far greater experience in that direction than I have.

Mr. Smith (Allegheny County Light Co.)—I would state that I am not in any way a representative of the Westinghouse people, though using their apparatus, but being in the same city as the manufacturer I have had exceptionally good opportunities for observing their work. In Philadelphia we are using lead and copper cables. We use that because it seemed to us in underground work that the first thing we had to look out for was moisture. We satisfied ourselves that we ought to get a good metallic covering. Our conduit in Philadelphia is made of a common pine box, in which the cable is laid, and the box is filled with pitch. In that we have iron boxes for connecting our feeder into our mains. The outside covering of the cable is not insulated in any way from the junction box. In some parts of the street where we found it difficult, owing to water pipes, the cable car conduits, and so on, to lay a wooden box, we used iron pipe through which we pulled these cables and then filled them up with pitch, We filled them up with pitch simply as a mechanical protection. We have not had the slightest trouble, or loss of current, or induction, or anything else. Our men handle the outer covering of this cable with perfect impunity, and as long as your dielectric is in good shape it seems to me you have something that is perfectly safe. I understand that some experiments have been made by the Westinghouse company with regard to this very question, and when I put to them the question their answer was that we could use any kind of cable we wanted to as long as the covering was good, but for practical use they would recommend us in this particular instance a lead covered cable having both conductors in the one light covering; that is to say, two separate cables soldered together through their whole length. And that is the form of cable I have been advocating myself for mechanical reasons. They made the test for us. They tested it thoroughly in every way and told me I would get perfect satisfaction out of it. When we turned the alternating current into our Philadelphia lead covered cable, where the cables are run in separate boxes but grounded througout their whole length, the question was raised whether static charges would not come into effect and our men get shocks. But we did not find that there was any effect whatever. As I say, I have had no experience with long conduits of iron; but it seems to me that if you run your wires close together that any effect you get on one wire would be neutralized by the other.

As to the inconsistency of the statements that very high insulation is necessary for alternating currents and that they are at the same time less dangerous to life than direct currents, I have only practical experience. In an ordinary arc light machine you have an immense mass of iron in the field magnets, and when you open the circuit you discharge the field magnets into the line. That is the reason I think that the Thomson-Houston machine gives a so much heavier blow than another. I have taken these discharges from the field magnets from an ordinary incandescent machine. It is a dead blow and there is a large quantity of electricity discharged at once, but in the armature of the ordinary alternating machine there is so little electricity in it that not much harm is done We never think of shutting down the machine for the linemen to splice up. They climb up the poles and make the connections on live wires. We have had no case of a man being hurt with it at all. We had one of our men short circuit a thousand volts on our switch-board with his plyers. It scared him somewhat and burned the plyers, but it did not damage either the machine or the man.

Mr. Slattery—I would say that I think the object of this report has been creditably obtained through the very valuable information elicited from representatives of the companies that

Digitized by Google

take a large interest and care in the introduction of this induction system throughout the country. The candid spirit in which the information is given is extremely gratifying. It is almost magnanimous in the manner in which it is given, and I cannot express my appreciation of it in too strong terms.

Mr. Kinsman—I would like to mention that I have succeeded perfectly in burning an arc light with a 50 volt converter from the alternating system of the Westinghouse company. We get twelve hours from two carbons and a light that is perfectly steady.

Mr. Smith—I would like to ask Mr. Kinsman what is the style of the arc lamp.

Mr. Kinsman—It was the Simplex lamp, 2,000 candle, 55 volts.

The next paper was on the subject of "Electrical Education," and was read by the author, Mr. E. R. Weeks, of Kansas City, as follows:

ELECTRICAL EDUCATION.

Few questions of the day are so important as the applications of electricity, and there is none upon which exists such a lack of general information

The telegraph business is so extensive that people think no more of sending a telegram than of posting a letter; we are beginning to depend upon the telephone as an every-day necessity; the electric railway has demonstrated its financial basis; and the electric light, though a creation of yesterday, is so largely used that about $200,000,000 are invested in its manufacture in America alone. In fact, so many are the practical every-day uses to which electricity is put, that we have not time to enumerate them. Yet the public has more knowledge of almost any other instrument of its convenience than of this one force that first inspired the fear and curiosity of man. Not only is the general public almost wholly ignorant of the principles, uses and modes of application of electricity, but there has been such a scarcity of those who have made a special study of these new branches of industry, that it has been well nigh impossible to secure the intelligent service that many of them require. A man of average education may easily gain the mechanical dexterity, the sensitive hearing, and the rapidity of thought necessary for telegraph and telephone service; but some applications of electricity require thorough, special training for efficient work, and we cannot hope for satisfactory service in the direction of traction and lighting till this training is furnished.

Electrical engineering is undoubtedly the occupation of the future for the young man who does not care to enter the already over-crowded professions, but whose education fits him for a broader field than that of the trades. It holds out the highest inducements financially, and it is a service in which the intellect can never rust out, as it offers a continually widening horizon of thought; indeed, the possibilities of this profession are as yet practically unlimited. In most fields of labor the best has been accomplished; here the work is in its infancy, and the demand is not only for skilled hands, but for trained and progressive minds. The property involved in the applications of electricity is already immense, and is rapidly increasing; much of the machinery used is most delicate—no unskilled hands should destroy its value or make it render less than its best service. "Electricians" to whom Ohm's law is "Greek," and "experts" who "adjust," but never *clean*, should not be allowed to multiply.

But how can the special education which shall produce true experts and electrical engineers be obtained? Several colleges have given this department some consideration, but not so much as it deserves. Its training should be both theoretical and practical. A thorough understanding of the theory of electricity is absolutely necessary to enable one to keep pace with the rapid progress in this branch of applied science; and without an intimate knowledge of the apparatus used, commercial success is impossible. Colleges and universities should have well equipped laboratories, and should add to their curricula complete courses in electrical engineering, laid out after consultation with those few eminent electricians who have had experience in the class room, the laboratory, the factory, the station, and who know better than any school recluse what theoretical training is of value.

To receive the greatest benefit from such special course, it would be well for the young man, after completing a thorough basic high school course, to spend some months in an electrical station doing the practical, every-day work there required, and thus gaining a more nearly adequate idea of the information he will need to give him skilled control of the forces with which he is to deal. With this preparation, he will be enabled to take hold of the theoretical work with a zest that can come only from an understanding of what it is to do for him and what he is to do for himself. Having finished his college course, he is not yet to consider himself a graduated expert; but some time spent as a learner in factories and stations should be a regular part of his electrical education.

After fully carrying out such a plan, the young man will be in possession of a theoretical and practical knowledge of the work he has chosen, that will give him access to the most desirable of positions.

The more complicated electrical industries are of such recent date, and their growth has been so rapid, that school-trained workmen could not be obtained. Schools had not time to adapt themselves to the new order of things. Only unskilled labor could be employed, and only such can be had for some time to come. Much of this work has been performed by uneducated men, many of whom have shown that good results may be accomplished without school training or higher mathematics. Thoughtful observation and practical experience have done well for them, but always at the expense of costly mistakes and delays, and at best such labor is limited in its possibilities. Only the trained mind can attain the highest places.

But something should be done to assist the vast army of halting hands that in the near future—nay, in the very present—must do the work, while the schools are preparing for this new field of labor. Ours is not an industry with long years of experience to draw upon, yet it is one in which the unexpected, the unprovided for, is constantly occurring. Therefore, interchange and comparison of thought and experience are more necessary here than in other industries of greater age or slower growth. Had this been fully realized in the earlier history of electricity, much of the bungling work of the past might have been avoided; for there can be no doubt that the progress in intelligent service has been greatly retarded by the narrow policy which refused to impart information to the "new man," but which is giving way before the broader influence of our associations. Members of the electrical fraternity are beginning to recognize the truths that knowledge given away is the more securely possessed; and that, as all know more than one, all may be benefited by an interchange of ideas, and employers are awakening to the fact that they must also be educators.

The National Electric Light Association is doing much, and should do more, not only for the mutual advancement of its members, but to bring the business which it represents before the public in an intelligent way, not at all as an advertisement, but because it is safer, pleasanter and more profitable to serve a people well informed upon our work than one whose fears are multiplied through ignorance. The Edison Association and the Institute of Electrical Engineers are also exerting an influence in an educational way, and the clubs that are springing up in all electrical centres, cannot fail to accomplish a good work in the same direction.

But such organizations, however valuable they may be, can effect but indirectly the large body of men who handle machines and lamps, run lines or serve in any of the branches of a business that needs intelligence even in its firemen. Yet these are the men upon whom the success of the new industry must largely depend.

As intelligent service is the most profitable, employers can afford to spare no expense to obtain it. Every station should possess a pleasant reading room, well stocked with papers, magazines and standard books on electrical and kindred subjects, and employés should be made to feel it part of their daily duty to inform themselves upon all matters connected with their work. From time to time they should be questioned upon important points; and if they cannot be led to do the necessary reading in any other way, they might have monthly grades and ranks determined by the information they have gained from their work in the reading room. All large stations should have mutual improvement societies of the men, furthered and assisted in a personal way by employers, in which the problems of daily work may be discussed, and directions given for useful and telling study by employés who do not well know how to help themselves.

Municipalities should appoint boards of examiners, whose duty it should be to inquire into the competency of electrical employés, especially those of light and power companies, as ignorance and poor workmanship here endanger both life and property. Line and station foremen should be licensed, as their duties are fully as responsible as are those of stationary engineers.

By such legal measures, faulty construction will be prevented, and cities will secure safe and efficient service for the public; they will further the interests of workingmen; will protect electrcal investments, and assist in the education of the people.

Mr. Smith (Jamestown, N. Y.)—I would like to ask if Mr. Weeks could recommend to the convention any practical text books which could be put in the hands of linemen for use in their every day duties.

Mr. Weeks—Yes, sir, I think there are a number of books which are sufficiently popular in their style to be of great use to employés. We have a society of our employés in Kansas City on the plan that I have pointed out here, and we have made it a complete success. I think that if Mr. Smith will get a list of electrical works from any one of the electrical papers, that he will be able to select from 30 to 40 books, sufficiently simple and elementary to form a nucleus for a library of this kind.

Mr. Garratt—I would say in that connection that I found a little work by Sylvanus Thompson, known as "Elementary Lessons in Magnetism and Electricity." It is a very valuable little work, and an inexpensive one, and contains enough material to keep the average workman busy for a long time.

Digitized by Google

Mr. Mason—There is handed me, sir, the following resolution which I have been requested to read. I will read the resolution and append another:

Resolved, That the work that was assigned to the committee on insulation and installation is of such importance that this convention cannot allow the subject to escape their earnest attention.

I add this resolution, sir:

Resolved, That a committee of five on insulation and installation be appointed to report at the next meeting, and that Dr. Otto Moses be the chairman of this committee.

The first resolution was then adopted.

Dr. Moses—That is a very high compliment paid by Mr. Mason, but I must beg to decline.

Mr. Mason—Does Dr. Moses refuse to serve on such a committee?

Dr. Moses—I do not refuse to serve but I refuse to be the standard bearer when others are more competent than myself.

The motion to appoint a committee of five was then carried.

The President—I will appoint the committee, and I will endeavor to induce Dr. Moses to serve on the committee, if not as chairman, as one of its members.

With Col. Leggett's consent I will place him on the committee on revision of the by-laws. There are two points which he made this morning, and which I concede to be of the greatest importance—first, that the convention should decide where the next meeting of the association should be held; next that they should elect for president of the association some one in the locality selected for the meeting, believing that rotation in office is a good thing. I have passed the time when I am seeking particularly after glory, and would be very glad to resign the glory and labor to some more competent hands. In making up these by-laws I think it would be well to consider that part of the proposition. The business of the association can be better handled if the president of the association is chosen from the location in which you intend to hold your next meeting. I assume, Col. Leggett, that you will serve on that committee.

Mr. Leggett—I think inasmuch as I was cut off in my remarks this morning, that it would be fair for me to say that as far as I am aware, there could have been no better service rendered to our association than has been rendered by our present officers, and especially our present chairman; but it seems to me that it is a matter of considerable importance that the offices should be rotated, for the special reason which has just been mentioned by the chairman. The meeting in a certain locality ought to carry with it as nearly as practicable the election for that year of officers of the association residing in the same immediate vicinity, and then again we might at some period be burdened with certain officers whom we do not like, and through sentimentality be burdened in a manner which we might not care to relieve ourselves of; while I am very happy to say—and I know I reflect the sentiments of every member of our society—that the present officers have served us with great ability, yet I think that we should change the constitutional ground work of the association, so that no difficulty or embarrassment may arise hereafter in the organization of our society or in its meetings. It was my purpose in speaking this morning to suggest that it be made an element of our by-laws, that the tenure of office of the president and vice-president be limited to a single term—that nobody be eligible to those offices for two successive terms. I think it ought not to apply to the secretary and treasurer, because their duties are of such a character that they may properly, with great benefit, be retained in the same hands for a considerable period. I want to add that this same matter was talked over by our present chairman and myself prior to the meeting in Detroit, and it was his own suggestion and desire that the convention should take the course now proposed.

The President—A thorough discussion of this question took place between Mr. Leggett and myself, and I believe that it is better that the officers of the association should be subjected to some system of rotation. There is an honor connected with the holding of the office of president at least, and we all should be eager to fill that office. I have served my time over and over again, and I would be very glad to hand the gavel to some one else next year. I hope some gentleman will suggest a committee on nominations and place of meeting.

On motion duly carried, a nominating committee was appointed, the president naming Mr. Mailloux, Mr. Leggett, Mr. Robertson, Dr. Moses and Mr. DeCamp.

The convention adjourned until 10 A. M. Wednesday.

SECOND DAY'S PROCEEDINGS.

The convention was called to order at 10.30 A. M. Wednesday, August 10th, by Mr. Ralph W. Pope.

Mr. Pope—I have been requested to call the meeting to order in the absence of the vice-president, and it will be proper for you to nominate a temporary chairman to conduct the business of the meeting.

Mr. Frank Ridlon was chosen, and took his seat as temporary chairman.

Lieut. Murdock, U. S. N., read a paper on "Electric Lighting for the New Cruisers." (See page 346.)

Lieut. Murdock—One or two things occurred to me while reading the paper. Things which are necessary in marine installations are measuring instruments, both ammeters and voltmeters, which are independent of both gravity and magnetism. We want some kind of an instrument that would be independent of the earth's magnetism and would not be affected by the local magnetism of the ship. Another thing which is necessary is the independence of the needle from the effect of the rolling of the ship. This has been already met by Sir William Thomson in his marine galvanometer, and I think in some recent instruments which I have not yet seen. The simplest way, apparently, is to suspend the magnet or needle, or coil, by a suspension which passes through its centre of gravity. If this is accurately done, of course the force of gravity has no moment to act upon, and the rolling of the ship does not affect the needle at all.

I was requested to present these facts to the consideration of the convention, and I have to express my thanks for the courtesy extended in affording me the opportunity to do so.

Dr. Moses—I listened with great pleasure to that very interesting paper, and as there are some points in it which are of very great interest to a large class of our nomadic population, I would like to ask some questions of Lieutenant Murdock in regard to some statistics which he has omitted. Would he kindly let us know whether he has gathered any information as to the methods of laying wires on board ships; that is, are grounds used? Is the hull of the ship used as one of the conductors, or is there a tendency to have the circuits entirely independent of the ship itself?

Lieut. Murdock—In England, I know, they use what they call the ship return, or, as they prefer to put it, the one wire system, but I do not think anything of the kind has been used in this country, and I should think it highly objectionable. All the installations are required to be protected by the highest attainable insulation—a double circuit, and every part insulated. The system of earth connections has been used for quite a long while in torpedo service. Much of the torpedo apparatus in the navy has until within the last few years been arranged to work with the earth, but premature explosions have taken place, and that has been discarded. To-day, as far as I know, all plants are installed with two wires and high insulation.

Mr. Kinsman—I would like to ask the gentleman if he knows anything about the experience of the steamship Alaska. They were at one time giving the one wire system a test.

Lieut. Murdock—No, sir. I know they are using the one wire system on Mr. Vanderbilt's yacht, the Alva.

Dr. Moses—I was crossing in the steamer Bourgogne of the Compagnie Transatlantique, and we had made a very rapid passage, and everything was very lovely when about four hours from Havre people began to be disturbed because the previous ship, the Champagne, had been run on the rocks at about that distance from Havre. We were talking of the matter and suddenly we saw a stir about the ship and observed the captain and one or two officers disappear, when we all made a start to find out what was going on. We found about 20 feet of the molding smoking heavily, and firemen at work tearing it down. We found there was the beginning of what might have been a serious fire; it was started by the defects that Lieut Murdock spoke of in the insulation. It is the hardest thing in the world to keep an insulation on a ship at sea. All of you who have houses at the sea shore will have noticed that where the verandah or piazzas are painted with metallic paints, that there is a tendency to decomposition by the chlorides of the sea air attacking the carbonates, you have the bare wood towards the sea, and the rest nicely painted. If you want to make a good paint for a sea house use the worst paint you can get—that is, carbonate of baryta, which would not be decomposed. All these insulations are affected by the chlorides that come from the salt breeze. In this particular case I took occasion to inquire into the subject. The hull of the ship was used for the return wire, and when I inquired into it—although the crew and officers were very well disciplined and very reticent, I found they were always on pins and needles for fear fires would break out. On further investigation I learned that there had been a previous accident of the same kind. It is a highly dangerous method of wiring, and we ought in some way to protest against it.

Mr. A. Reckenzaun (of London)—I should like to ask Lieut. Murdock whether he has ever tried Ayrton & Perry's meters on board ship. These meters are protected by an iron shield which renders them independent of any magnetic influence. There is no necessity for the meter to be put perfectly level upon any table on any particular spot where the measurements are taken.

I should like also to point out in connection with this subject that in British men-of-war it is the tendency to use the double wire system, because, by using the ship's side as a return there is a large liability for leakages, as pointed out by Dr. Moses.

Lieut. Murdock—I have not been able to use the spring meter on board ship. With a Cardew voltmeter the needle would vibrate about four volts, and with the Perry ammeter it seemed

Digitized by Google

to vibrate about the same number of amperes. I don't know of anything in the market to-day better. I believe in the British navy they have been using a portable form of Siemens' dynamometers, and some of them have been ordered here in order to test them.

Dr. Moses—I am sorry to trouble you again, but there is some further information I would like to elicit. Signaling, I presume, is a very important thing on war ships, and it is very necessary that you should be able to use both small and large lights. Now, is it your experience that a 100 or 110 volt circuit is adapted to the use of arc lights, or would it not be preferable to have a 50 volt circuit on board ship so as to be able to use your arc lights directly in multiple arc?

Lieut. Murdock—I have recommended in the paper 70 volts. Of course our experiments with these search lights have been going on a great many years, and the general tendency seems to be that at least a tenth of an ohm dead resistance has a very steadying effect on the light, no matter whether we use a hand lamp or an automatic lamp. A little dead resistance seems to give us better working. The search lights are used so seldom and our general method of working is so economical, that we do not care for the energy we waste in these dead resistances. The search lights themselves are of French manufacture, though I think the Brush company, of Cleveland, have made essentially the same apparatus. I must confess, perhaps, to a little disinclination to use an incandescent lamp at 50 volts. I would rather take a little higher potential and work a lamp about 4 watts per candle.

Dr. Moses—Have you ever visited the installation on board the United States fish commission steamer Albatross?

Lieut. Murdock—I am familiar with the details, but have never been on board the vessel. They use the old Edison B lamp. Of course, if we want to take a B lamp with 55 volts, we can do it better than with a 10 candle lamp of the same potential.

Dr. Moses—On a recent visit to Pittsburg I saw everywhere an installation of 50 volt lamps. It appears that the Westinghouse company, of Pittsburg, have adopted that as a standard. Their reason for adopting it, as I am told, is on account of the economy of the lamp. They use less watts per candle power. It also permits of the use of arc lights directly in the circuit. Incandescent light people, as a rule, neglect the arc lamp, and arc light people neglect the incandescent lamp. It seems to me there should be an imitation of the harmony that prevails here, and they should unite in one system the advantages of all. Arc lights should be used with incandescent lights, and yesterday some one, I think Mr. Smith, of Pittsburg, suggested that an arc light can be used direct from converters. If Mr. Smith is present he will confirm or deny it, but I presume it must have been on a 50 volt circuit.

Mr. Smith—It was Mr. Kinsman, of New York, who mentioned that. It was news to me.

Mr. Kinsman—Some seemed to question the ability to run on very high voltage. They asked me if it was possible, after the adjournment. I have run them equally well on 100 volt converters. Fifty volts are, however, more desirable.

Dr. Moses—I happen to have made the first experiments on board the steamship Albatross that I spoke to Lieut. Murdock about, with the use of an arc light on incandescent light circuits. It was a 55 volt circuit. It was a lamp directly in the circuit, and one that was operated by a function of the current, and the lamp was invented to run on incandescent light circuits. While there it was found, after a great many experiments, that there was a normal length of arc. You may, of course, make lamps for any voltage, but it is found by experience, taking carbon in its chemical composition and the tendency to an extinguishment of the arc, that a certain length of arc is best adapted to arc lighting. For that reason it is necessary to have about 45 volts between the terminals of the lamps, and if you are running a 55 volt circuit it gives you that limit of loss which enables you to run out to any length right from the incandescent circuit on the ship. In this particular case there was about one-eighth of an ohm put in. It worked very satisfactorily. There was no winking of the lamps at all. The lamp itself was invented for a 55 volt circuit; for the difficulty of putting lamps in series on a multiple arc circuit is so great that it is not advisable. Therefore, the adoption of a 50 or 55 volt standard enables us to harmonize the arc and incandescent light in a most remarkable way. You can use your lamps directly from the circuit, and there are places, of course, no one will deny where an arc light is far superior to an incandescent light. It gives you five times as much light per pound of coal burned, and for large spaces it is very much more useful; so that it will be very desirable to adopt some general system in which arc lighting and incandescent lighting could harmonize.

Mr. Kinsman—The lamp that I have mentioned has been wound so that we have successfully burned two lamps, that is, multiple series, on a 110 volt current. I have not the slightest doubt but that can be successfully done by the lamp in a very short time. That brings the thing down to a commercial basis and under all conditions.

Mr. Wright—Lieut. Murdock speaks of one of the requisites for ship installation being the settlement of the voltage. I think that difficulty is entirely overcome with the alternating current system, as we can supply a converter to give you any voltage you please from our primary wires.

Lieut. Murdock—I am very glad Mr. Wright suggested that. I think there is one objection to the alternating current on board ship, and that is for search lights. Our hand lamp is rather a peculiar affair. The carbons are inclined at an angle and placed out of the line. The positive carbon being uppermost, so that the crater is turned toward the mirror. As most of the light is given off from the end of the positive carbon in a continuous current I fear that in an alternating current system we lose this advantage. As we are trying to get a system in which we may use both arc and incandescent lights from the same dynamo, the alternating current in this respect does not seem so good. I do not know that I fully comprehend Dr. Moses, but in the system I speak of we work our arc lamps parallel with each other, just as we put in incandescent lamps.

Dr. Moses—I would state more fully, then, that it is desirable of course to run an arc lamp exactly like an incandescent lamp. The arc is a constant for every voltage, so that if you use a multiple arc arrangement and you have a 50 volt circuit, since the arc for a 50 volt lamp is best adapted for arc lighting, it is advisable to use the 50-volt circuit for that purpose. You may use two lamps in series or throw in a considerable amount of resistance if you use a 70 volt circuit as you suggested.

The Chairman—I am very sorry to inform you that I hold in my hand the resignation of Mr. Morrison, president of the National Electric Light Association—something that I did not expect.

Dr. Moses—I move that it be indignantly refused.

The motion was numerously seconded, and carried unanimously.

The Chairman—The next business before the meeting is the report of the Committee on By-Laws—Mr. A. J. DeCamp.

On the request of Mr. Camp, the report of the committee on by-laws was deferred and made a special order for Thursday morning.

The Chairman—I have an invitation here from Mr. Meigs, of the elevated railway, East Cambridge. I have also an invitation from the New England Telephone & Telegraph Company to visit their works, and asking us to designate a time when any or all the members will make this visit.

Mr. DeCamp—Mr chairman, I would like to lay before you a communication which is a matter of information. It is not information growing out of any official action of this association, but it is a matter with which you are all more or less familiar, and several questions have been asked me in reference to it. The secretary will please read it.

The secretary read as follows:—

"The Committee of the Association of Electric Light Companies for mutual protection against exorbitant prices of carbon, after careful deliberation on the subject, desire to announce that in view of the collapse of the late carbon combination and the unsettled condition of the market, it is not deemed advisable at present for the association to take further action towards establishing a manufactory or the concentration of a large number of contracts for carbon, believing fully that the individual companies will experience no difficulty in placing their orders at fair and satisfactory prices. W. S. FREER, Secretary."

The secretary read the resignation of Mr. Charles Cooper as treasurer of the association.

Dr. Moses—I would like to repeat the same resolution that was offered with regard to our president were I not forbid from doing so by Mr. Cooper himself, whose great good sense suggests—and I should lay it before the convention in his words—that the treasurer should naturally be in the neighborhood of the president.

On motion the resignation was accepted, and the thanks of the association offered Mr. Cooper for his services.

Dr. Waldo then addressed the meeting on the subject of instruments for the bending test of line wire, as follows:—

In looking over some specimens of wire which were sent to the Baltimore & Ohio Telegraph Company, Mr. Maver and I were very much impressed with the uncertainty of the bending test of line wire. Very simple devices are oftentimes very advantageous in use, and I thought it might be of interest to tell the convention of a simple tool which will give more or less uniform results in the bending tests. The objection to taking a piece of wire in your hand and bending it, as is ordinarily done, is this—that a piece of wire bent at an angle here (illustrating) will break, not in proportion to its strength or its value as a wire, but in proportion to the diameter of the wire and its crystalline structure. A very hard drawn wire, for instance, will break with much less bend around a sharp angle than around a curve of its own diameter. I noticed that in all the tests described by the division of postal telegraphs in England, Mr. Preece is care-

Digitized by Google

ful to insist that the wire be bent around its own diameter. Any of our hard drawn coppers will break after one, two or three bends. The little instrument which Mr. Maver and myself constructed is merely a pair of plyers which can have a pin of different sizes inserted at its centre of motion, and will grasp the wire uniformly, and it is meant to be screwed to a board, so that the angle at which the wire finally breaks on the last turn is accurately shown. I think, as the mechanical properties of wire come more and more into consideration, that it is extremely important that we have a uniform system for this bending test, and I do not know of any better condition than that the wire shall be bent around its own diameter, a pin of its own size held by some such instrument as this, and that the number of degrees that it takes on its last turn shall be registered. For instance, we know that a wire will take three right angle bends and we will say fifty degrees more. You can make any arbitrary standard, as convenient, as to the number of degrees of bending that a wire should stand, and as many of our wires will break at a single bend or bend and a half, it is very important that we keep the last number of degrees which the wire bends in order to have any indication of the mechanical value of these high grades and hard drawn copper conductors. This little instrument will lie in the office of the *Electrical World*. It is very crude; it is the first one that was made. Of course the next one will be simpler and better.

In a discussion with Mr. Preece, and also in conference with the telephone people in Paris, I became a good deal interested in the silicon-bronze wire question. I take it that we can look upon all conductors of electricity as merely transparent to electricity, so to speak, and that electricity will travel through them a good deal as light will travel through glass. In our dense ignorance as to the ultimate nature of electricity, of course we can only surmise in regard to this point, but I take it that that is a good practical conception to bear in mind. Now, it has been found that very small quantities of alloy introduced into a very good conductor have very much the effect of the introduction of a small amount of iron or any discoloring substance into glass upon the transmission of light, and that has been found true particularly of some of the earthy alloys—arsenic, for instance, and phosphorous and silicon. But there is also a peculiar physical change which takes place when silicon or phosphorous is added to the bronze. What that change is I do not know, but in thinking the matter over, it has seemed to me that the addition of a small amount of silicon or phosphorus must enable the atoms of molten copper to effect a certain nearer relation to each other; that the centres of the atoms, so to speak, are allowed to come a little closer, and that the tensile strength is much increased by the addition of these small quantities of the earthy alloys. But whatever the cause may be, it is an experimental fact that the addition of small quantities of phosphorus and silicon, and perhaps some other alloys, has given us bronzes which have high tensile strength without any greatly lessened conductivity. Now I began a series of experiments on silicon and its application to these bronzes to see whether we could get conductors which should have mechanical properties of a high order and at the same time have the transparency to electricity which copper has. The first results of these experiments, after two years of work, are beginning to show themselves, and I have here a number of specimens, which I shall be very glad to give to any person interested, of some silicon-bronze conductors in which a high tensile strength has been obtained by using a core of silicon bronze and a covering of copper. You are all aware, perhaps, that some of the French engineers have made stretchings of a mile between supports in some parts of Algiers of very hard-drawn pure silicon-bronze wire. But the trouble with it is that the conductivity is no greater than the conductivity of steel, and for our purposes we want high conductivity, so I was led into a variation of the ordinary form of conductors, and returned to the idea of a cored wire. It was not possible to push the silicon-bronze conductors up to a tensile strength of 120,000 pounds to the square inch—and that rivals the tensile strength of the best steel—without reducing the conductivity to a comparatively useless point, and I therefore, was led into the experiment of coring the wire. I, think, by common consent, the disadvantages of the old style cored wire arose largely from the difference in electrical conditions between the core and its coverings. If any moisture got between the steel core and the copper covering, we had a perfect electric pile, and a certain amount of disintegration would take place between the core and its covering. Now, that difference of potential does not exist between the bronze core and the copper covering of a silicon-bronze wire, because they are so nearly alike chemically, and their electrical condition is almost identical. But there is another very great advantage. The fusing point of silicon—that being an alloy of copper—is slightly lower than the fusing point of copper itself, and it became possible to put in ingots of silicon-bronze and to cast around these ingots pure copper. There would be a perfect joint of fusion, so that when the ingots were taken from the moulds there was an ingot of silicon-bronze covered with copper, which would have a perfect mechanical homogeneity, and these little samples which have been passed around the room are specimens of wire drawn with a silicon-bronze core, with the ends polished so that you can see there is a difference in constitution of the metal, but it is almost impossible to separate the silicon bronze core from its outside covering. This is a more or less complete solution of the problem of having electric light conductors of very considerably more tensile strength than anything which copper can give and yet possessing almost the conductivity of copper. In the case of smaller wires the amount of success reached is equivalent to about the following figures: A wire 103-1,000 of an inch in diameter will break at about 650 pounds, and for torsion and bending it is much more satisfactory than the best hard drawn coppers which we have been able to get. You have, too, variable quantities of conductivity and the tensile strength, and you can save either at the expense of the other; so that it becomes possible by using the silicon-bronzes, to vary for particular conditions either of those qualities; and I think the experiments which we have made bid fair to be successful in producing permanently a conductor—not perhaps better than copper, because we purify our copper more and more—but a conductor which is very good, and which will possess mechanical properties which thus far have not been attainable.

One thing more as to the ultimate course of experimenting in this direction. The silicon-bronzes made in Europe have been expensive, because of the prohibitory prices put on by the owners of the only patents under which they could be made—the Lazar-Wyler patents; but owing to the genius of the Cowleses in the working of their smelting furnaces, by which silicon can be reduced from its quartz in a much less expensive way than any other that has yet been tried, and in consequence of the low price of silicon these silicon-bronzes will be made doubtless at a cost which will be not at all prohibitory for their use in places where wires have to be swung from supports and tensile strength becomes of great value.

Dr. Moses—The very interesting remarks of Dr. Waldo have elicited from my neighbors here a comment which I would like to bring to the attention of the convention. He suggests that perhaps the hard drawn core being more slowly acted upon by its own weight in stretching, would perhaps break after the outer covering had yielded. Experiments on the tensile strength of wires are conducted so rapidly, that there is no opportunity that I see for fatigue of metals becoming a factor.

Dr. Waldo—I think the whole question of the mechanical testings of wire is one of extreme importance. I have been very much struck in testing long series of wires with the disturbance caused by this very fatigue of the metal of which Dr. Moses speaks In using a testing machine for testing strengths, it is of the utmost importance that the strain be applied very gradually because you could all get different results in a machine where the strain is applied gradually at an interval of several minutes, we will say, for each wire and where the strain is applied rapidly. I, for one, would like to see a committee or some representative body which should take under consideration the unifying of the mechanical tests for wire for electrical purposes. I think both the bending and the torsion and the breaking tests are all now made very much as a particular whim of the company or person using the wire prescribes, and if we had a uniform method of making these tests, we should have data for preparing conductors mechanically in a way which is not now possible. I do not know but that I am ready to make a suggestion that a committee be appointed, having for its province the consideration for report at some future meeting of the convention of the best means of establishing a uniform system for the mechanical testing of wire for electrical purposes.

Dr. Moses—I think, Mr. President, that is a very excellent suggestion, and I hope that the president, in appointing that committee, will consider the extent of the investigations of Dr. Waldo by referring the matter to him as one of the members of the committee. There is, I think, a committee appointed for the purpose of considering insulations and wires in general. But this might be made a special subject of investigation, and if it is the pleasure of the convention to appoint such a committee, I hope Dr. Waldo will take charge of it.

The Chairman—Gentlemen, I should be very much in favor of appointing such a committee as that. But I was rather in hopes that the appointment would come from Mr. Morrison, as he is perhaps more familiar with the transactions of this association than I am. But as he is not here, I will appoint Dr. Waldo on that committee and Dr. Moses. Is there another committee already in existence that this could be attached to?

Dr. Moses—It strikes me that the committee on insulation and installation, of which Prof. Houston, of Philadelphia, was in charge, had a similar matter in hand.

The Secretary—That committee resigned and another committee was to be appointed. That committee was on the proper insulation of wire, and the proper installation and construction of plants.

The Chairman—We will leave that matter open then, until the president appoints the other committee and join this committee with that.

Digitized by Google

Mr. Mailloux—I would like to ask Dr. Waldo whether electrolytically produced copper has ever been used in making wires. I have had considerable experience in making copper by electrodeposition, and I find it possible in that way to make a copper which is not only very pure—sometimes 999 fine—but it is also a very ductile substance, and it can be bent a large number of times without showing an absolute rupture. It occurred to me that perhaps some attention should be given by wire makers to the use of that kind of copper.

Dr. Waldo—I confined our experiments at first to copper which was electrically deposited on the cores, and we obtained some remarkably fine specimens of wire in that way; but the cost of the process was prohibitory, and the copper which I have used frequently is merely the highest grade of Lake Superior copper.

Mr. Mailloux—Referring to electrolytically deposited copper, I did not mean that it was deposited on a core by electricity, but I referred rather to copper which has been produced in the form of slabs by means of electrical deposition. There is now a firm here in New York that has produced, I understand, some 500 tons of plates of copper per month by means of electrolysis, and I meant particularly copper which can be used in ingots just like any other form, except that it is very pure and exceedingly ductile.

Dr. Waldo—There is great danger in the melting of copper. One of the most insidious difficulties in the manufacture of high grade conductors is the introduction of a sub-oxide and a protoxyd of copper as an impurity, and I am very much afraid of any process which involves the constant melting or re-melting, and I should be afraid that electrolytically deposited copper would lose all it would gain by being electrolytically deposited in any ordinary process of melting. The protection of that copper during melting has been one of the most serious difficulties that we have had to face.

The convention then adjourned until the following day at 10 A. M.

THIRD DAY'S PROCEEDINGS.

The convention was called to order at 10.30 A. M. Thursday, August 11th.

The committee on revision of the constitution presented a form of constitution which was adopted. As reported by the committee, the constitution contained a clause providing that the same person should not hold office as president for two consecutive terms. The striking out of this provision was the only material change made in the constitution as reported by the committee.

The new constitution is as follows:

The name of this association shall be "The National Electric Light Association."

Members of this association shall be companies, firms, or persons, operating electric light and power stations for public or commercial purposes, manufacturers of electrical supplies and apparatus. Electricians, electrical engineers and persons, firms or companies whose professions or business is directly collateral thereto, may become members, upon the recommendation of the ex-committee and approved of by the association.

Each member, in a vote by ballot, shall be entitled to one vote.

A ballot may be demanded by one-fourth of members present.

Persons may become honorary members, without the right to vote, by ballot of the association.

The officers of this association shall be a president, two vice-presidents, treasurer and secretary, and an executive committee of six members, the president, vice-presidents, treasurer and secretary being members *ex-officio*.

The president and vice-presidents shall be elected by ballot to serve from the close of the annual meeting at which they are elected, until the close of the next annual meeting.

The treasurer and secretary, who may be one and the same person, shall be nominated by the president, subject to the approval of the executive committee. The executive committee shall be chosen by ballot at each meeting, either annual, semi-annual or special, to hold office from the close of the meeting at which they are elected until the end of the meeting at which their successors are chosen.

The duties of the several officers shall be those usually pertaining to their respective offices.

The treasurer, secretary and executive committee shall make a written report at each meeting to be spread upon the records of the association.

The executive committee shall be the governing body of the association, three of which shall constitute a quorum. They shall meet from time to time and shall report upon application for membership, gather and prepare information upon topics of interest and arrange for their discussion at the several meetings of the association.

The annual meeting of the association shall be held in February, and the semi-annual in August of each year at such place as the association shall determine, and such date as may be determined by the executive committee.

The membership fee of each member shall be $10—which shall accompany the application.

The annual dues shall be $10—payable in advance, and shall cover the calendar year.

All amendments to the constitution shall be presented in writing, and referred to a committee to be appointed by the chair before being acted upon by the association; a two-thirds vote of those present shall be necessary to their adoption.

A ballot on such amendment may be called for upon the request of five members of the association.

The President—The next business in order is the report on wire gauge by Mr. Garratt. The convention laid the matter over until to-day, and the question is upon the adoption of the report made by the committee on wire gauge.

Mr. Phelps—I have a resolution to present for consideration in respect to the report of the committee, in consonance with the ideas I expressed here Tuesday on the subject, namely:

Resolved, That the report of the committee on wire gauge be received, and the committee discharged with the hearty thanks of the association for the valuable work accomplished by them and presented in their table of the mathematical properties of the metric gauge; and it is further

Resolved, That in view of the large number of gauges already in existence and the confusion arising in their use, it would in the judgment of the National Electric Light Association be inexpedient to promulgate an additional gauge. The association earnestly recommends to its members and all others using copper wire the practice of designating sizes by definite diameters, such practice having already come into extensive use, as a feasible escape from the confusion of many gauges. The association further recommends the use of the meter and its fractions in designating diameters, and in furtherance of that end, publishes the tables presented by its wire gauge committee August 9th.

Mr. Mason—When I made the motion to make this the order of the day, it was in view of a resolution like the following, which I will beg leave to submit as a substitute for the other:

Resolved, That the report of the wire gauge committee be accepted; it being understood that by accepting it, we, as an association, commit ourselves to the following:

First—That in reports, communications, &c., we will designate wires by their diameters expressed in fractions of the meter.

Second—That in our personal conversation and business, we will designate wires in the same way in so far as we find possible.

Third—That this association offer to wire manufacturers such aid in the way of information, as shall enable them intelligently to list their wires on the metric system.

Now, Mr. President, my point is this: If a man wants a gauge we have a gauge there in the table which has been presented to us. I beg leave to differ a little from the chairman of the committee on that point. The left hand column of figures upon the table which is before the convention contains arbitrary numbers, although they are based upon the second column—the tenth of a millimeter—but we have there a gauge and those numbers will, undoubtedly, if such resolutions be passed, come into use by us. We can telegraph for wires under these numbers. I am very confident that the majority of the association feel that while we do not wish to go any further than is necessary in this matter, we want to do something that will commend itself to the users of wire and the makers of wire throughout the country. It seems to me that we are only following in the line of action taken by our government, and taking a very modest step if we shall adopt the resolutions just read. I understood, Mr. President, that a letter was read six months ago in our session from Messrs. Brown & Sharpe, in which they stated that they regarded the proposed metric gauge as very superior to their own, and if this convention would in some way adopt it or express its approval of it they would be very glad to adopt it for use in the measurement of their wires. That was a very strong testimonial to the value of this proposed system, and I would like some action taken which would lead them to do that which they proposed to the association that they would do. Other wire manufacturers will probably follow in the same line, and as a dealer in wires I feel that we shall all be greatly convenienced. I received an order a short time ago for a number of miles of wire from the far west. The order simply read so much No. 8, so much No. 10 and so much No. 12. I sent them the Brown & Sharpe gauge. The wire was, to a certain extent, useless to the purchaser. He had *meant* the Birmingham gauge. If it is understood that this association has, in a general sort of way even, adopted this metric system, we shall have our orders and know what they mean.

Mr. Garratt—I would vote strenuously against any adoption of any system of wire measuring which should, in a cast-iron way, commit us to it. I would not vote for the adoption of any system of measuring wire which would not leave each individual completely at liberty to do whatever he wished to do. If a man cannot find it more to his advantage to use this system of measuring than any other, we never can oblige him to do so. My idea in regard to that would be this: Take such action as would leave us at liberty with the commendation and encourage-

Digitized by Google

ment of the association, to use a better system of measuring than we heretofore have had; the best I know of being the application to the wire of its simplest principle, namely, its diameter.

Mr. Mailloux—I wish to express my appreciation of the precision and care with which the work of the committee has been done. I agree perfectly with the sentiments just expressed by Mr. Garratt. I regard the valuable work done by them as a priceless contribution to the fund of knowledge which we have regarding the methods by which we measure the various properties of wire. At the same time I am aware, as you all are aware, that in this country the inch is used very extensively. Since the discussion on Tuesday, I have taken the opportunity to speak of the matter with several gentlemen, makers of electrical machinery, who are using wire in very large quantities, and they have told me that so far as they were concerned, they could only make use of this gauge to a very limited extent—that it would not apply to their purposes—that they would adhere to the method of determining sizes by thousandths of an inch, because as they use the foot as the unit of length it would be very inconvenient to determine the area of sections of conductors in one system of measurement, and the length of it in another system of measurement; so that in making computation as to the space occupied by wire, or as to the weight of wire, they would find themselves in a worse predicament than they were before. I also noticed that in wires of certain applications the thousandth of an inch is more convenient than the other. Now, while I believe the system proposed by the committee to be very valuable, and that it has undoubtedly a great range of application, I do not think that we ought to force people to accept it, because if one system is more applicable than another, the person who finds it of greatest convenience to use that system ought to have the privilege of using it.

Mr. Eustis—I would like to speak in regard to that computation of weight which the gentleman was speaking of—changing from millimeters into feet, that is, measuring the diameter in millimeters and yet computing the weight for a given length in feet. I think if he had studied the table as much as I have, perhaps, he would have found it just as easy to make that calculation, or for anybody to make that calculation from the number which is given as the logarithm of the sectional area, and then by simply multiplying that one number by a constant, you can get the pounds per thousand feet which is given here. It is immaterial in any computation of this sort, whether you start with an inch or with a millimeter in making the final determination. The constant holds true; because your length, your weight per thousand feet is proportional to the sectional area multiplied by some given constant. Whether you take the sectional area in inches, or whether you base it on millimeters it is immaterial. I have here the constant for the calculation of pounds per thousand feet. I will just put that on the board in case anybody would like to have it (2.096472). That is the constant which is to be subtracted from the logarithm of the area given in square millimeters.

Mr. Steuart—I have only one word to say. This opposition to the motion as it now lies before the house, reminds me very much of a bugaboo—it is an imaginary evil that may come and may never come. The question of whether this gauge would be useful is altogether a question of the survival of the fittest. The question which presents itself practically is whether this thing will prove to be so much better that every one will adopt it in preference to inches, and I think that is the only question which is to be determined, and that can only be determined by practical tests in actual use, and I think that the opposition to the passage of this motion, which is merely a suggestion on the part of this association is altogether out of place.

The President—The question now is on the substitute of Mr. Mason for the resolution offered by Mr. Phelps.

Mr. Phelps—I have only a word to say, sir. Having prepared the first resolutions I naturally have a little preference for them. There is not very much difference between them. What I have undertaken to do there was to emphasize particularly the desirability of sticking to the principle of designating actual diameters and avoid the notion of promulgating a new gauge. The other resolution does not differ very much from it, but there is a slight difference in tone between them which perhaps should be considered.

Mr. Wheeler—That resolution is so strongly worded in regard to this association committing itself to certain things, that I think we want to be very sure before we do commit ourselves, that the gauge proposed is a good one. All the gauges that have grown up from the needs of wire makers have had the notches made so that the larger sizes differed by larger spaces than the smaller sizes. That is very well shown by the charts prepared by the committee on wire gauges where the numbers are placed so as to correspond with the old gauges, and the first number equals No. 38 of the ordinary gauge, and the second number equals No. 32. Therefore, the gauges we have been using for the fine wire sizes have six numbers in between the first two of the new proposed gauge, and at about the bottom of the chart, at about No. 00 of the old gauges, there are nine numbers of the new gauge which correspond to the one number 00 of the old, which shows that in the fine numbers the new gauge does not have fine enough differences, and at the bottom the new gauge has too fine spaces. That is to say, take a No. 38 wire, for instance, which differs from No. 37 by half a thousandth of an inch, and in the new gauge the difference is six times that, which is not fine enough for practical work. We are sure to need some number between No. 1 and No. 2 of the new gauge, and at the bottom we have one number of the old gauge which covers nine numbers of the new.

Mr. Garratt—I would say in that connection simply, that before two conventions I have debated and explained at length the objection raised by the gentleman. He will find it in the electrical and in a number of the ordinary newspapers. I have suggested no gauge. That is simply a table by which from the tenth or the hundredth of a millimeter you can determine the properties of any wire you wish. Again, the gentleman says let us pick out a gauge from the existing gauges. Of the present existing gauges there are 14 Birmingham gauges in use to my knowledge, and there are 30 or 40 Brown and Sharpe gauges used in America. The question of there being in the small numbers too great variation has been replied to and replied to until I am sick and tired of it. Any mathematician who knows the rule of three can construct from any one of those small numbers the properties, electrical and physical, which he requires. In ordering wire he can order by the hundredth of a millimeter, and he can determine that by the micrometer. The statement that those numbers do not correspond to the Brown and Sharpe ratio is entirely impertinent to the question. I repeat that I have advanced no gauge.

The President—This discussion has gone along far enough, and the hour for adjourning the morning session has arrived. Before adjourning, however, it is necessary to dispose of this business. The question now is, on the adoption of Mr. Mason's substitute for Mr. Phelps's resolution.

Mr. Mason's substitute was lost.

The President—The question now occurs on Mr. Phelps's resolution.

The resolution was carried.

The President—The first paper that will come up at the afternoon session will be that of Mr. Mailloux on "Storage Batteries," followed by Mr. Reckenzaun, of London, on "Electricity as a Motive Power," and a paper by Mr. Duncan on motors, and that is all that is on the programme at the present time, except to decide the place for the next meeting.

Mr. Wheeler—I want to say that Mr. Garratt is dead right about the gauge question. I was trying to answer the second resolution; that was all.

On motion of Mr. DeCamp, an appropriation of $50 was voted for the expenses of the attendance of the secretary at this convention, together with a further sum of $60 for printing.

The convention adjourned until afternoon.

THURSDAY AFTERNOON SESSION.

The convention was called to order at 2.30 P.M.

Mr. Leggett—There is a matter which should be of very great importance to many of us—probably to all of us—the undergrounding of wires, which has not been touched upon in the convention. I would like, if feasible, to have it understood that after the reading of the last paper, we take that subject up for consideration.

The President—The suggestion is a very sensible one. You have all got to come to it in the end, as I told you two years ago.

On motion of Mr. Leggett it was voted that the subject of underground wires be taken up after the reading of the papers on the programme.

Mr. Mailloux then read a paper on "The Present State of the Storage Battery." (See page 351.)

Mr. Martin—Mr. Reckenzaun's paper, which is to follow, as I understand, also includes the use of the storage battery, more particularly with regard to its application in street railway service. As he touches upon many points, I presume, that have already arisen in Mr. Mailloux's paper, I would like to offer a motion that Mr. Reckenzaun's paper be now read, and then that the two papers be discussed together.

The President—I presume there will be no objection to that.

Mr. A. Reckenzaun then read his paper (see page 349), and added the following remark:

Gentlemen, I hope you will do me the honor to discuss this subject as thoroughly as our time will permit, and raise as many difficulties and objections as you possibly can, and I shall do my best to answer them.

Dr. Moses—There is one of the maxims of this association, unwritten and not in the constitution we adopted to-day, that I think we all have in mind at all times—it is, honor to whom honor is due. Mr. Reckenzaun, with a facility that is most amazing to me, in a foreign tongue, has written a very able paper,

Digitized by Google

which no doubt will be placed on the files of the association. There is one sentence in the beginning of his paper which I would have him kindly correct, before spreading it upon the minutes, which is owing, as I say, to his not being to the manner born, and which will leave an impression that we should not have go forth. He says Mr. Plante turned to *profit* certain inventions, meaning simply, took advantage of certain natural effects, or used them—that I think to be his meaning. Mr. Plante has never turned to profit—in the ordinary sense, that is money profit—a single one of that brilliant series of inventions connected with the secondary battery which have immortalized his name, and which caused him to receive a grand medal of honor from the French government.

Mr. Reckenzaun—I meant scientific profit, doctor. Allow me to repeat that sentence. I say here: "He was the first to turn to profit the action of secondary currents."

Dr. Moses—Would you amend that and say, take advantage of, or use?

Mr. Reckenzaun—I would be very pleased to.

Dr. Moses—Now for the shaking up Mr. Reckenzaun asks for.

There is a question I would like to ask him which is important in its bearings on the running of street cars, will he give us the weight in pounds of the car that he speaks of in Philadelphia and which he wants us to go and ride upon? We do not want too many of us to go, and for that reason I am anxious to know what the strength of the car is, so that we wont break it down.

Mr. Reckenzaun—I have given the weight of the batteries in this paper. In the car which we use in Philadelphia, there are actually 80 cells, because there are considerable gradients to go over. Each cell weighs 40 pounds, and the average horse-power is six. Sometimes we only use two horse-power and sometimes, going up grades of 5 per cent., we use as much as 12 horse-power, but the average rate is six electrical horse-power. With reference to the weight of passengers on the cars, we have never carried more than 50 passengers on that car, because it is impossible to put more than 50 men in to it. There are seats for 24, and the rest have to stand on the platform along the step.

Dr. Moses—Another question, if you please. What time does it take you to change your battery?

Mr. Reckenzaun—The changing of the batteries takes three minutes with proper appliances. One set of cells is drawn out by means of a small winch, and a freshly charged set is put in. It takes the same time to charge the battery as it does to discharge it in the working of the cars, so one reserve set would be sufficient to keep the car continually moving.

Dr. Moses—What loss of energy have you found accompanies the mere change of a set of batteries?

Mr. Reckenzaun—Our loss of energy right through between the steam engine and the car wheels?

Dr. Moses—No, simply moving the batteries from the car to the depositary where it is charged.

Mr. Reckenzaun—Well, the car is pushed into the depot where the cells are being charged. Therefore, there is no moving of the cells required with the exception of just taking them out of the car and pushing a fresh lot in and one powerful man can attend to that. The loss of energy from standing about is probably nothing. If a battery were to stand charged for three months in a dry place, the loss of energy might be 10 per cent. I purposely had a set of cells standing charged for two years unused. After two years there was still a small amount of energy left. So as regards the loss of energy in a battery standing idle, it is practically nothing, because no one would think of charging a battery and letting it stand for three months or a year.

There was a small amount of energy left after two years. I have had cells stand three or four months, and I could hardly appreciate the loss going on, providing always that the cells are standing on a dry floor. If the exterior of the box be moist, if it stands on a moist floor, there will naturally be a surface leakage going on; but when there is no surface leakage, the mere local action between the oxides and metallic lead will not discharge the battery for a very considerable time.

Mr. Powers—There is one important matter, that is the amount of power used. When it requires from 4 to 12 horse-power to accomplish the work, I would like to know where the loss occurs if the energy of the street car horse is good for 2 to 6 horse-power. I think I shall have a great deal more respect for the car horse than I have had before.

Mr. Reckenzaun—I have made experiments in London with a loaded car pulled by two horses. I put a dynamometer between the attachments of the horses and the cars—a spring dynamometer—so as to ascertain the pull they exerted in pounds. Multiplying this pull in pounds by the distance traversed in a minute we could get the number of foot pounds that the horses exerted, and you will be surprised that two horses doing the easiest work exert two horse-powers to three horse-powers. On a car in Philadelphia we used between 2 and 12 horse-power. Two horse-power is the least amount of power that a pair of horses exert, and you will be surprised to know that each horse is capable of exerting eight horse-power for a few minutes, and when a car is being driven up a grade, pulling a complete load of passengers, those two horses during the whole time that they are pulling up that grade exert 12 to 16 mechanical horse-power, and that is the reason why street car horses cannot be run more than three or four hours out of the twenty-four. If they run longer they are dead in a few weeks. If they run two hours a day they last three or four years.

Mr. Phelps—Might I ask Mr. Reckenzaun if he is prepared to estimate at all as to the life of the cells, that is, to say approximately, how long it will be before the outfit will have to be entirely renewed? That is a very large item in the consideration of the question economically.

Mr. Martin—I would like to supplement that, and ask what was the cost of running per car mile including depreciation.

The President—Let us get at that question Mr. Phelps put first.

Mr. Reckenzaun—The life of the cells must be expressed upon the principle of ampere hours or the amount of energy given off by them. Street car service requires that the cells work their hardest for fifteen or sixteen hours a day. The life of the cells has to be divided; first, into the life of the box which contains the plates. This box, if appropriately constructed of the best materials, will last many years, because there is no actual wear on it. The life of the negative plates will be very considerable, because no chemical action is going on in the negative plate. The negative plate consists almost entirely of spongy lead, and the hydrogen is mechanically occluded in that spongy lead. Therefore the depreciation of the battery is almost entirely due to the oxidation of the positive plates. If we were to make a lead battery of plates ¼-inch thick, it would last many years; but for street car work that would be far too heavy. Therefore we make the positive plates a little more than one-eighth of an inch thick. I find that the plates get sufficiently brittle to almost fall to pieces after the car has run fifteen hours a day for six months. The plates then have to be renewed. But this renewal does not mean the throwing away of the plates. The weight is the same as before, because no consumption of material takes place. We take out peroxide of lead instead of red lead. That peroxide, if converted, produces 70 per cent. of metallic lead, so that there is a loss of 30 per cent in value. Then comes the question of the manufacture of these positive plates, which, I believe, at the present day are rather expensive. But I believe the time will come when battery plates will be manufactured like shoe nails, and the process of renewing the positive plates will be a very cheap one.

Mr. Martin asks the question how much is the cost per car mile. I ascertained in Europe that the motive power for a full street car costs one penny—two cents per car mile, that is, for the motive power; and I have to allow twice as much, that is, two pence per car mile, for the depreciation of the battery at the very high rate which we had to pay for a battery, and that was about twelve dollars for each cell; but I believe that as soon as the storage system has been sufficiently expanded, that the renewals of plates will not come to more than one penny per mile, and the entire cost of propelling these cars will be two pence per mile or four cents, which is about one-half of the cheapest horse traction.

Mr. Martin—I have listened to Mr. Reckenzaun's paper with a great deal of interest and attention, and was very glad to have the opportunity of gathering so much information in so short a time and presented so compactly. Mr. Reckenzaun has had a privilege which very few of us can enjoy, and that is of visiting every one of the electric railways in Europe now in operation. His very valuable observations on that subject were recently presented to the London Society of Arts, and presented in so able, masterly and exhaustive a manner as to obtain for Mr. Reckenzaun the silver medal of that society. (Applause.) I read Mr. Reckenzaun's paper brought before that society with a great deal of interest, but there was one point which impressed me very much, and that was that in Europe the merits, the claims and the advantages of the cable system did not seem to enter into the consideration of the case at all. Here we have to deal with that problem. The cable is running in this country; it is running in most of our large cities where the storage battery must find its chief scope and play, and unless with the storage battery we can make a better presentation than the cable men make with the cable and the grip, it is not likely that we shall see the storage battery assume the position and importance which we believe it is entitled to. I have seen various statistics on the subject of the amount of power required for operating a cable railway, and I have seen some of the statements go as high as a loss or waste of 80 per cent. I would like to ask Mr. Reckenzaun whether, since his arrival in this country, he has looked into that subject at all, and whether he finds that the loss in getting the current into the storage battery and then delivering it to the motor, is less in comparison than that in the use of the cable in the power finally delivered to the car.

Digitized by Google

Mr. Reckenzaun—I have made some very careful observations on the cable tramway in Philadelphia, which is quite an extensive system. I have never been able to ascertain the exact amount of waste in pulling the cable itself; but I have it on the authority of certain technical papers that there is a waste of about eighty per cent. I do not intend to depreciate cable or any other tramways, but there is a difficulty about introducing cable tramways. It is necessary to dig up the streets and interfere with the roadways. I have been told that the cable arrangements in Philadelphia cost $100,000 a mile, and that the cable road in San Francisco cost more than that. One of the directors of the cable company in Philadelphia told me that if he had seen the battery system before the introduction of the cable he would probably have made up his mind in favor of the former. The wear and tear in the case of the storage system is also considerable. There is a waste of energy in the dynamo; secondly, in the accumulator charged by that dynamo; thirdly, in the motor which is driven by the accumulator, and fourthly, in the gearing which reduces the speed of the motor to the speed required by the car axles. It would be difficult to make a motor run at the rate of eighty revolutions per minute, which is the number of revolutions of the street car axle when running at the rate of ten miles an hour. Take all these wastes and you find in practice that you do not utilize more than 40 per cent. of the energy given by the steam engine. But this is quite sufficient to make this system much cheaper than horse traction.

Mr. Mansfield—I would like to ask Mr. Reckenzaun in regard to the waste of energy necessary to carry the storage batteries or cells. Wouldn't it take so many batteries in some cases as to make the weight of the batteries many times the weight of the car? On a level street it would not take so many. Batteries of two horse-power might be sufficient, but on a grade of five per cent. it would be necessary to carry twelve horse-power storage batteries for probably ninety per cent. of the time. Although I understand that the energies of these batteries would not be used except when needed, at the same time they would weigh a great deal when carrying them through the streets. I have figured somewhat on these problems, and I am still inclined to favor the more direct system. I believe that the time arrives in the history of a city when it is necessary that considerations of beauty should be sacrificed for utility. When necessity demands it we can run wires overhead through our streets.

Then I would like to ask if he would give us any figures that he has in regard to the rate of loss that he would allow on an average load between the power necessary to carry the passengers, and that to propel the car.

Mr. Reckenzaun—In my paper I gave the exact figures of the weights of the entire material used in propulsion and the weight of the car as a whole. I think I stated that the electrical apparatus has one-fifth of the weight of the car when filled with passengers. Then Mr. Mansfield says that we have to carry 12 horse-power batteries, because occasionally that power is required. Now, it is well-known that we can discharge the storage battery *ad libitum*, at the rate of two amperes or 200 amperes. I can get out of a storage battery almost any horse-power I like for a short space of time. I have not the least objection to the direct system. But when you come to run twenty or thirty or fifty cars on one line, you will require very large conductors or dangerously high electromotive force. The overhead system is applicable to its own particular purposes. Where there are only five or ten, or even twenty cars, running on one line, and that line runs through a suburb or a part of a city where there are not many houses, that system is to be preferred. The objection to the overhead system is not so much the want of beauty, but the want of practicability. You have to put your posts very high indeed so as to let great wagon loads of hay and all sorts of things pass underneath. Most of the trouble comes in winter, and when it is snowing hard a great many difficulties arise. As regards the loss, suppose that the resistance of the overhead lines is one ohm. To draw one car it will take an average of 20 amperes, and the only loss will be 20 multiplied by 20, that is 400 watts through line resistance. But if there are ten cars, on that line you get 40,000 watts loss of energy, unless you increase the conductor in proportion to the number of cars. If you do that you get an enormous conductor, and have a sort of elevated railroad instead of a telegraph wire, as most people imagine an overhead conductor to be.

Mr. Reckenzaun said further in answer to a question put by Mr. Smith: The current required to run a street car is about 30 amperes, and an electromotive force of about 180 volts. If cars are run in connection with an incandescent light station, we can arrange our apparatus so that we can use an E. M. F., say of 110 volts, and then we can put in a smaller number of cells with a larger capacity that will give a corresponding horse-power. We can charge such larger cells with 50 or 60 amperes instead of 30.

In regard to arc lighting machinery, the arc lighting dynamo should not be used to charge the accumulators. They can be used, but they require such constant attention as to make them impracticable. We can only use shunt-wound dynamos conveniently for that purpose.

Mr. Pendleton—I understood that the loss of power in drawing the cables in Philadelphia was ascertained at 50 per cent. In San Francisco it was 68 per cent. used in drawing the cables, 28 per cent. in operating the cars, and 4 per cent. in carrying passengers. In the remarks made by Mr. Reckenzaun I understood him to say that he considered the shunt-wound dynamo essential in charging the storage battery.

I have had in continual use a dynamo for the purpose of charging storage batteries, but I found it necessary to use a current breaker in order to avoid the reversal of the dynamo, which at one time bothered me a good deal. I think, perhaps, there is no other difficulty whatever in using any ordinary series dynamo, although the shunt-wound dynamo has certain advantages for general use.

I am reminded by hearing Mr. Mansfield speak of the direct system of transmission, that about a year ago I was asked the question by the board of directors of the Brooklyn City Railway, what the difference in cost was between the direct transmission of electricity for the purpose of propelling cars and the storage battery. It was a complex question, and I felt that it could be solved by a diagram more readily than by language. Therefore, I drew two parallel lines of rails, supposed to be five miles in extent, and I pointed out that the resistance of the circuit when it reached a sum to divide the power developed at the station equally between the conductors and the motors, would make the secondary battery beyond that the most economical. On one occasion, before the New York Electrical Society, where we were debating the subject, I mentioned a method which I had of using direct transmission near the station, charging the batteries and operating the motor by means of a combination of the battery, and then utilizing the electrical energy at the extreme ends of the route. A storage battery might be able to work far more usefully than by merely exhausting a charged cell. I believe that, under the circumstances, a secondary battery can be made to operate a car for a day of fifteen hours without removal, and only require to be removed when, by extra discharges, the motor became heated or required attention in the battery hospital, which every car station must have.

Mr. Mailloux—I am largely interested in the problem of street-car traction with accumulators, being consulting electrician for the company which I believe put the first street-car propelled by accumulators in commission—a car run on the Madison and Fourth avenue lines in New York city. Some of the data which I add by way of corroboration or comparison with those of my friend Mr. Reckenzaun might, perhaps, be interesting. The grades on that line, as some of you may know, are extremely severe; not only that, but they are long, so that they tax not only the capacity of the motor, but that of the battery very severely. We have on one part of the line a grade of nearly 5½ per cent., and there are a number of grades as high as 4 per cent. Besides that, in several places the grades happen to be on curves, which add greatly to the effort required by the motor to propel the car. We have found that it was preferable to use two motors instead of one. We think it would be better to use motors rather larger than necessary in order to obtain larger effects with a comparatively high efficiency. We use 130 cells, which weigh somewhere in the neighborhood of 3,000 pounds. The whole car, with the motor and batteries, weighs as nearly as possible about six tons without passengers. This weight is altogether excessive, for the reason that the car has very strong iron beams. It was strengthened in Europe before it was sent over here, with the idea that we might want to carry enormous weights upon it.

I wished to ask Mr. Reckenzaun as to the amount of electrical energy per mile, that he finds necessary. I have found as the result of repeated observations that we must count upon an electrical supply of energy equivalent to from one to one and two-tenths electrical horse-power per car mile. This means that if we have a supply of electrical energy equal to, say, 40 electrical horse-power hours, we have enough energy to run somewhere between 35 and 40 miles. In practice we do not deem it expedient to exhaust completely the capacity of the car, and we find that a run of 30 to 35 miles is all that it is best to make in the ordinary everyday work of a car. We find, therefore, that in the average day's run of 60 or 70 miles it is necessary to change the accumulators once a day The car would start with a charge in the morning and would change somewhere about the middle of its work, irrespective of the number of hours it had been in operation, because the number of hours run includes the stops.

The question of transmitting the power from the axle of the motor shaft to the wheel shaft is one that has received a great deal of attention. I know that Mr. Reckenzaun has gone over that subject very carefully in Europe, and that he has some original plans and systems of his own. I think it would be very interesting if he would tell us of his experience.

In one system we have found it preferable to use a counter shafting in order to reduce the speed of the motor, but the reduction which we obtain is perhaps larger than it would be in regular practice. We reduce in the ratio of nearly one in ten. In other words, the motor runs nearly ten times as fast as the shafting.

Digitized by Google

In considering the expediency of a change from horses to electric motors, it is important to determine how quickly that change can be made. It is there that the secondary battery system presents, undoubtedly, great advantages. If we operate by overhead conductors or underground conductors, it is necessary at once to incur the expense of organizing the system of conductors completely from one end of a road to the other. In the upper part of the road in which we have this storage system, there is a suburban end from 86th street to Harlem. There are very severe grades there, but the travel is not very large. There they run some thirteen cars. Now, the superintendent of the road, tells me that with the electrical street system it would be possible to give the people in that neighborhood something very close to rapid transit. It would be possible to run all the cars at a much faster rate of speed—it would be permissible, under certain conditions when it is remembered that the line is almost entirely in the suburbs of the city—and in that way the time of making the trip would be very much shortened. We found that we could very easily attain a speed of twelve miles an hour. Of course, we are not at liberty to make very lengthy runs at that speed, but we have experimented with the line during the night several times, when the tracks were entirely free, and in that way we have been able to determine pretty accurately the rate of speed that might be maintained.

There is another important thing in relation to the electric railroad. It is braking the momentum by electricity. I found that railroad men, as conservative as they are, when once they conclude to adopt electricity, like to have everything on the car done by electricity; and one of the first questions which they propounded was as to the practicability of braking the momentum by electricity. One electrician proposed to use the motor in charging a battery while descending a grade, which would produce an intermittent charging. I confess that I do not see very much margin to be expected from this, judging from what has been developed up to the present time, in the way of economy or gain; but I should be interested in hearing the views of so experienced an electrician as Mr. Reckenzaun on that subject. With the car that we are running on Fourth avenue, we were enabled to run up a high grade with a load of some 30 passengers, with an additional car attached containing some few passengers more. But the superintendent was not satisfied with that. He made a stop on the grade, and after stopping, a start was accomplished without any difficulty.

Mr. Pendleton—I see that Mr. Reckenzaun is making some notes, and, if the president please, I will say a word in reply to Mr. Mailloux. Inasmuch as the accumulators are so rapidly changed, there cannot be very much difference. Instead of having two sets of accumulators to the car, you would have only a few additional accumulators, which would be a manifest gain. I desire to call Mr. Mailloux's attention to that matter in answer to his remarks.

Mr. Reckenzaun—I am very much obliged to Mr. Mailloux for his complimentary remarks concerning me personally. In regard to using two motors on a car, there are several advantages in it. I use two motors on all my cars in Europe, and always have done so from the beginning. One of the advantages is, that in case of an accident to one motor the other will bring the car home; secondly, with two motors we can vary the speed without changing the E.M.F. of the battery. If I want very much power I put two motors in parallel, getting four times the power that I do with one machine, and an intermediate power of two motors. There is another advantage of having two motors, and that is that we can use two driving axles instead of one, and we can go up grades with almost double the facility that way, because the adhesion would be double. These are the main advantages arising from the use of two or more motors. Mr. Mailloux asked if I would give my experience in regard to the mechanical transmission between the motor and the car axle. I have used almost everything that was known at the time, but in order to give you a full and detailed account of the various modes of transmission which I have used I should have to give you figures to bear out certain experiments. I should only be able to do that in a lecture of at least five hours duration, so I hope that you will kindly excuse me on that point.

With regard to the durability of plates, I have taken into consideration fifteen hours a day. In regard to the application of electrical brakes, I will say that that was one of the first ideas that entered my head when I began to use electric motors, and other people had that idea long before me. I have used an electric brake, using the motor itself as a brake—that is, as the car runs down a grade by momentum it generates a current, but this current cannot be used for recharging a battery. It is utter nonsense to talk about that unless we have a steady grade four or five miles long. The advantages are very small indeed, and the complications which would be introduced by employing automatic cut-outs, governors, and so on, would counterbalance anything that might be gained. As regards going up an incline, of course stopping and starting again has to be done often, and anybody who at any time works cars by electricity, whether they have storage batteries or not, has to allow for sufficient motive power to overcome all the difficulties that any line might present. One of the great mistakes which some of the pioneers in this direction made was that they did not put sufficient power upon the cars. You always ought to put on the cars power capable of exerting perhaps 20 to 40 per cent. more than is necessary in the ordinary street service, so that in case of the road being snowed up, or in the case of any other accident which is liable to occur, you ought to have plenty of power to get out of the scrape. Mr. Pendleton made certain suggestions in regard to a combined system of conductors and accumulators. I do not know much about those, and I could not give an opinion unless I had studied the matter thoroughly.

Mr. Kinsman—What would be the effect on an accumulator of intermittent charging, such as the gentleman spoke of, in going down grade?

Mr. Mailloux—It would not have any bad effects so far as that is concerned, but it is simply a question of the expediency of the process—whether there would be sufficient energy gained by it to make it worth while.

Mr. Kinsman—The point I wanted to make was, is intermittent charging economical and desirable?

Mr. Mailloux—I don't think it matters very much whether the current be intermittent or not. There may be a slight difference in fluctuation of the counter-electromotive force through variation of the rate of charging, and that might affect the efficiency of the storage battery as an instrument for conversion, but it would not affect its storing capacity to any appreciable extent.

Mr. Martin—We have all listened with pleasure to Mr. Reckenzaun's outlining of his experience. Mr. Reckenzaun is among us for a very short time. We have already in our ranks several distinguished European electricians as honorary members, and I would like the opportunity of offering the resolution that we receive Mr. Reckenzaun into our ranks as an honorary member.

The President—Mr. Reckenzaun is already an active member. There is more honor in that than in being an honorary member.

Mr. Reckenzaun—I can only express my feelings of gratitude for the honor conferred upon me. I am quite sure I do not deserve it.

The president then called on Mr. Duncan for his

REPORT ON ELECTRIC MOTORS.

Mr. Duncan—At the last meeting a committee was appointed to prepare statistics in regard to the number of motors in operation at central light stations, the prices paid, and so on. A circular was issued; some of the companies responded but a very large proportion did not respond. One member of the committee, however, in New York, paid particular attention to the New England states and collected a large amount of valuable information which he promised to have with him here on Monday evening, and to meet the other members of the committee. However, that information and the gentleman himself have not arrived, and the papers which I have contain some information which I do not think should be published unless through the hands of the executive committee. It gives information regarding charges, etc., of some of the local companies which it might not be judicious to spread out for general information, and, therefore, instead of preparing a written report, I ask the privilege of making a motion to refer those papers to the executive committee, so that they shall pass upon them, select such data from them as they may think best, and have them distributed for information. I make that motion and ask for the discharge of the committee.

The motion was carried.

The committee appointed to recommend a place for holding the next meeting of the association submitted the following resolution, which was adopted:

Resolved, That the next place of meeting of this association be in the city of Pittsburgh, at such date in February as the executive committee may determine.

Dr. Otto A. Moses, Mr. Stephen Holbrook and Mr. F. A. Gilbert presented their resignations as members of the executive committee, which, on motion, were accepted.

Mr. S. A. Duncan, of Pittsburgh, Mr. T. Carpenter Smith, of Allegheny City, and Mr. Wells W. Leggett, of Detroit, were nominated as members of the executive committee, to take the places of the gentlemen who had resigned, and there being no objection, the secretary cast the ballot of the association for the persons nominated.

DISCUSSION ON UNDERGROUND WIRES.

Mr. Leggett—I believe that it was agreed at the opening of the meeting that we would talk up this matter of underground wires at the close of the session. I desire to state what position we are in at Detroit. At Detroit, as most of you gentlemen are aware, having seen our city, we are lighted by the tower system. We have got some 400 miles of wires in our system there. Just at the present time our City Council, our Board of Trade and our Mayor, all of them very excellent gentlemen who have at heart the welfare of our city (and there is no question but that they have at heart also the welfare of our country) have deemed it expedient

Digitized by Google

on their part to stop immediately the operation of running the wires underground. Now, we are met with this condition of affairs, that we do not know what to adopt. We would be very glad to have the views of this convention, or the views of such members of it as have had experience in this line, and to know if there is any system which any one can recommend that is beyond the experimental stage. We have invested in the city of Detroit nearly half a million of dollars in our plant, and you can readily see that we are driven to an extremity. That, of course, to us, is a matter of very grave importance. We want to know whether we are obliged to take one of a number of things, each of which is experimental, or whether there is some system which some person, some member of this association, can say that he has found to be expedient and practicable throughout for this purpose.

I must confess that after all our investigations in this matter, we are as yet entirely undecided to know what to do. We recognize, as well as our Mayor, our Board of Public Works and our City Council, that this matter of overhead wire is becoming a very serious one; interfering with fire ladders, causing more or less danger to property and to person, but the remedy is what we are seeking. If there is anything which we can adopt, we would be very glad to adopt it; and for that reason I hope that there will be short remarks from a number of sources, stating the experience of different individuals in this line, and whether there is anything that they can now recommend; and I should also be glad to know of the difficulties that they had experienced in regard to the matter. I would like very much if Mr. DeCamp would state briefly whatever experience he may have had with the matter in Philadelphia; and if we have a representative in the room from the city of Brooklyn, I would like also to hear from him.

Mr. DeCamp—In Philadelphia, as in Detroit, we are not beyond the experimental stages. There has probably been more work done in that direction in the city of Philadelphia than in any other city in the country, and this is the condition of it: The department known as the electrical department of the city of Philadelphia, about a year and a half ago, made an appropriation of $5,000 to put down a line about one mile long. A lead-cased cable was put in, well insulated, put in a trough, the trough was filled up with residuum of petroleum. That carried 12 lights of 30 volts each, which was the extent of that particular line. At the end of a year, a further appropriation permitted the department to extend its line. It however, was not extended in a double line. The remainder of the circuit was made on one side in the conduit, and the other overhead. That has been in operation about six months. It is now carrying a load of 59 lamps of 45 volts each, and has been doing that for probably the last three months. The cable is working fairly well, but from various causes has had more or less grounds on it—very many more than the overhead circuit. Additional experience was recently had at South street, where there was a circuit of one mile put in. The first circuit put in was taken up for some reason, it being a failure. The cable, which is there to-day, is a good one, but the superintendent tells me that the grounds are so numerous that he hardly knows where to commence to pick them out, and there they are to-day in that condition. Whether it is the fault of the cable, or of the conduit, or of the work done, I do not know. That, however, has brought us to this conclusion, that we have got to replace all of that before we shall be justified in running more lines over such a circuit.

The sectional underground wire operated by the Electric Light and Power Company, of which company I am the manager, is the latest experiment in the way of underground electric lighting which we have in Philadelphia. The gentleman in charge of that work is a clever man, and a man of more practical experience in the operation of underground wires I think, than almost any other man in the country. He is a man of exceptional intelligence, and is an enthusiast in his work. He has left no stone unturned to look into the difficulties which we have experienced, and to try to foresee them. The conduit itself I believe to be one of the best structures in existence. I am speaking now merely for its convenience. It is an iron conduit. Previous to my taking charge of it, I do not know how many cables they had in; I do not know how they were selected, but they were selected certainly, with the best judgment that the company then possessed. The condition of the streets of the city of Philadelphia, particularly the old section, where the gas mains are laid is such, that I find it to be utterly impossible to keep street conduits free from gas. In the city of Chicago, I am told, they are troubled with gas in their conduits, and I hear that the city of Brooklyn has had two or three explosions in connection with its telephone service. Therefore, I am forced to the conclusion that conduits in the city of Philadelphia at least will have to be abandoned—open conduits. The cost would make them prohibitory. I am not sure that they would be successful, but it looks reasonable that they would be, if that amount of money could be spent on them. As a matter of information, backed by what little experience we have in that line, I want to say that our use of any metallic covered table has not been encouraging. We have had a great deal of trouble with it. There seems to be a disposition of the current—reactionary current or something on account of the lead casing, which makes it very difficult to handle at the terminals, and that accounts for a great many of the grounds that we have on that line.

Mr. Brown (Chicago)—I have had about eighteen months experience with underground work in Chicago, and would agree with Mr. DeCamp in a great many things that he has mentioned but hardly in all. We have the Dorsett conduit there, and we are troubled greatly with gas, and have had one or two explosions, although they have not caused much damage. We find that the principal trouble with the conduit is at the joints. We think that if a perfectly tight joint could be made between the sections that we would not have so much trouble with gas and even water that leaks in. The newest conduits to-day of which we know is the Hurlburt conduit which has a flexible joint. I do not know that any of it has been laid. It has been on the market but a short time, but it seems to me that it would surely carry out their expectations from the fact that the joint is flexible. We have man-holes at an average distance of 400 feet apart, and between the man-holes we find that the conduit sags after it has been laid any length of time from the pressure from above—the street traffic. I have seen on exhibition this new conduit and the joint is very flexible indeed. It would allow the bending of at least 6 inches in 400 feet, and I have seen a joint in water which has been in that condition six months now without any leak at all. We have some sixty or seventy miles of wire underground, and in that sixty or seventy miles of wire, all classes nearly of cable underground wires are represented. We tried lead covered cable at first, and finally thought it was best to give that up, but lately have gone back to it. We find that in places lead covered cable fills the bill. We think it is best to make our main circuits running from the stations before we reach any lights, of lead with wiped joints, and after we leave the conduits and run through the laterals under the sidewalk, we find it would be best to have something besides lead cables, because as you know on all arc light circuits we have to cut them everywhere and anywhere at all times to put in and take out lights. Lead covered cables I do not think suitable under the sidewalk. You see there is a dead ground, less than a quarter of an inch away from the main circuit, and as we run through the areas, the cable is subjected to injury. We find it necessary to have wiped joints on the lead cable, and when we leave the conduit to leave lead cable for good and put some other. We also have great annoyance from the rats. They eat the lead of the cable, and we average a dead rat a week. You can see where their feet and their tails burn on the cables, and we find them on the ground with their noses burnt off.

Mr. Powers—I have been in the past year somewhat interested in this underground system. The principal cities of the state of New York, outside of New York and Brooklyn, have been greatly exercised during the past year on account of the interference of the wires at the Buffalo hotel fire with the ladders of the firemen, and on account of that a number of bills were introduced and two or three were passed by the legislature and signed by the governor, allowing wires to be introduced underground with the consent of the local council. We told the contract board of the city of Troy that we would break our contract and would make no contract with them under any condition that did not contain a clause eliminating the underground business. In other words, that our contract should be binding as long as our wires were overhead. Unless we are to have a great deal of trouble, in the smaller cities especially, it is necessary for the electric light men to take an uncompromising attitude. People say because we want the wires underground that is good reason why they must go. That is all they know about it. A prominent paper of the state of New York actually urged as an argument that because an Edison company in the city of Albany put their wires underground, we in the city of Troy should put our wires underground. Now, in that state of ignorance it is the business of this convention to enlighten people on that subject as much as possible, and also to take the most uncompromising attitude toward forcing the wires underground. Let them understand it is not possible in the present state of the art, especially where lights are spread over a large area. The point I am insisting on is that the people do not understand it. They regard the matter of putting wires underground as an everyday occurrence, like putting the gas mains underground. If this association can speak with authority on that subject I am sure it will help people when they need help in the matter.

Mr. Leggatt—I would like very much to hear from the president on this subject, and to learn what experience he has had in Baltimore.

The President—We have not had any. I have declined for a good many years, going before legislative or municipal committees for the simple reason that it is only a question of costs as to the feasibility of placing wires underground. It is a question I do not care to debate, because we do not want to put our wires underground. It costs too much.

Mr. Leggatt—That is just the information I wanted to arrive at.

The President—Very expensive, sir, but entirely feasible.

Dr. Moses—There is a little matter, but one of great importance—as trifles sometimes have a most important influence—

Digitized by Google

there is a little thing that might be reported upon at some future meeting, and that is the influence of electric currents, both continuous and alternating, on small masses of magnetic matter, and on the demagnetization of the same. That is intended to cover the question of the rapid magnetization and demagnetization of small masses of iron used in measuring instruments; and also, what is the effect of currents, large and small, upon watches, which are in everybody's pocket; and whether it is possible for them to be demagnetized, when once they are really magnetized, by any appliances we have. It is a question of great importance, when you consider that the first chronometer that went accurately was the means of bringing the inventor a reward of £20,000 from the British government. You can see it is a matter of importance to have time-pieces absolutely accurate for certain purposes. All of the chronometers used on board ship contain masses of iron in them, and it would not be pleasant to have somebody come down on an electric light company for causing the magnetization of the chronometer and thereby bringing about the loss of a ship.

The president appointed Mr. E. Lange, of Pittsburgh, a committee of one on the subject.

The President—I will appoint on the committee on insulation, &c., to take the place of those who have resigned, Prof. Thomson, of Boston; Dr. Otto Moses, of New York; Dr. L. Waldo, of New Haven; Dr. Duncan, of Baltimore; E. Lockwood, of New York; George Hamilton, of New York, and O. N. Shallenburger, of Pittsburgh.

Prof. Thomson—I thank the president for the honor of being appointed on that committee. I will endeavor to collect all the information I can in regard to those subjects, with the assistance of the other members of the committee.

Mr. Duncan—If there is no other business before we adjourn, I would just like to call the attention of the convention to one point. I was not present yesterday morning when the report of the carbon committee was presented, and it seems to me that there is one point which interests local lighting companies which has been passed over without very much consideration, and in that connection it seems to me it would be well to take some action, preparatory to the next meeting, to look into this question of carbons very thoroughly, either through the executive committee or some special committee; because, if we have got to break down a pool every two months, we ought to be in shape to do it, and it seems to me that, from the information which has been going around—not in the convention itself, but from mouth to mouth—in regard to the formation of an organization and the prices desired to be obtained by the old pool, that the time has arrived for the companies interested here through the committees of this association and through its proper officers to look after that subject very carefully. It seems that we have been able in the past to get along very comfortably with the pools, but I can conceive of circumstances where it might take considerable time to break up a combination. If that is the case it seems to me it would be well to have either a special committee appointed or the matter referred to the executive committee to keep it in hand. As I understand, the committee that reported yesterday morning was discharged. If they were discharged I should make a motion that a committee of three or five be appointed to take this matter in hand, and that all papers pertaining to carbon be referred to that committee for report at the next meeting, and that they have power at any time to call the attention of the executive committee to any proposed action, such as has taken place within the last few months. I think it is high time that we protect ourselves as well as that the parent companies protect themselves in the manufacture of carbon.

At the request of the president, Mr. Duncan put his motion in writing as follows:

Resolved, That a committee of three be appointed by the chair to inquire into and report on all matters pertaining to the carbon supply.

The resolution was adopted.

The president then declared the convention adjourned to meet in Pittsburgh on a date in February to be hereafter determined by the executive committee.

EXHIBITS.

The following companies and firms made exhibits in parlors and other rooms of the Parker House:

American Tool and Machine Co., Boston.—Dynamo starter and stopper.

The Baxter Electric Manufacturing and Motor Co., Baltimore.—Baxter motors from ¼ to 10 h. p. in operation, driving a variety of machinery. The largest motor, a 10 h. p., running an incandescent machine supplying current to a number of Sawyer-Man lamps used to light the range of parlors. A very complete exhibition, and by far the most comprehensive show of electric motors yet seen at a convention.

Blodgett Bros. & Co., Boston.—Annunciators, alarm bells, etc.

Boston Rubber Shoe Co.—Rubber tape for splices.

The Bernstein Electric Light Manufacturing Co.—Incandescent lamps on arc lamp circuits.

Billings & Spencer Co., Hartford, Conn.—Drop forgings in copper, iron, and steel, for use in dynamo construction.

The Callender Insulating and Waterproofing Co., New York.—Insulated wires and cables.

The C. & C. Electric Motor Co., New York.—Small motors with fan attachments.

A. G. Day, New York.—C. B. Hotchkiss, Agent—Kerite wire and cables.

Edgerton Electric Motor Co., Philadelphia.—Electric motors driving pump, ventilator, and coffee mill.

The Electrical Accumulator Co., New York.—Several types of storage batteries.

The Emerson Power Scale Co., Florence, Mass.—Scale for measuring power.

The Fiberite Mfg. Co., Portland, Me.—Fiberite battery jars, made from wood pulp.

The Geneva Non-Magnetic Watch Co. (limited), New York.—Non-magnetic watches.

The E. P. Gleason Mfg. Co., New York.—Glassware, fixtures, fittings and appliances for incandescent lights.

P. C. Holmes, Gardiner, Me.—New turbine wheel specially designed to run electric light machinery by water power.

Kennedy Mfg. Co., Providence, R. I.—Waterproof insulation of fibrous material.

Kimball & Davis, Boston.—New dynamo for incandescent lighting.

C. L. Ireson.—Leather link-belting.

Leatheroid Novelty Co., Boston.—A variety of its products in leatheroid.

C. J. McIntire & Co., Newark, N. J.—Connecter for joining wires.

New England Wiring and Construction Co., Boston.—Multiple switch system for incandescent lighting.

New England Glass Works.—Shades and globes for electric lights.

New York Insulated Wire Co., New York—Grimshaw white core wires, cables, and Grimshaw tape.

The Okonite Company, New York.—Insulated wires, cables, and flexible cords.

The Para Rubber Co., South Framingham, Mass.—Rubber insulated wires.

A. L. Russell, Boston.—Electrical testing instruments.

The Standard Underground Cable Co.—Underground, submarine, and aerial cables.

The Scovill Manufacturing Company, Waterbury, Conn.—Silicon-bronze, German silver and other wires.

The Simplex Electrical Co., Boston.—Campbell insulated wires.

The Shaeffer Electric Mfg. Co.—Electric lamps, switches, fixtures, etc.

The Standard Electric Time Co., New Haven, Conn.—Electric gauges.

The Sawyer-Man Electric Co.—Incandescent machine and lamps, run by 10 h. p.; Baxter electric motor.

The Sun Electric Co., Woburn, Mass.—Incandescent lamps running by alternate currents and connecters.

The Thomson-Houston Electric Company.—Motors, station fittings, and incandescent lamps; new voltmeters and ammeters. They exhibited incandescent lamps running by converters receiving a 1000-volt current from an alternate-current machine at the Thomson-Houston station in Congress st.

Rhode Island Telephone and Electric Light Co.—Wright cable clips and "Little Giant" batteries.

The Vitrite and Luminoid Company, New York.—"Luminoid" incandescent lamps.

The Washburn & Moen Mfg. Co., Worcester, Mass.—Wires for electrical purposes.

The Wainwright Mfg. Co., Boston.—Feed-water heaters, corrugated tubing, etc.

The names of those in attendance during the three days are given below:

New York—P. C. Ackerman, C. H. Barney, W. H. Blake, A. W. Butterworth, C. S. Bradley, E. Bynner, W. L. Candee, F. G. Cartwright, Wm. F. Cullen, W. M. Callender, Addison Conkling, H. N. Curtis, Isaac H. Davis, Henry C. Davis, F. C. Dowd, P. A. Dowd, C. L. Edgar, J. B. Edson, E. F. Gennert, M. W. Gleason, M. W. Goodyear, John H. Hapgood, J. M. Hill, C. B. Hotchkiss, H. McL. Harding, F. E. Kinsman, W. C. Kerr, A. A. Knudson, H. F. Lufkin, E. T. Lynch, Jr., Z. Latshaw, C. O. Mailloux, Geo. T. Manson, T. C. Martin, Romaine Mace, Dr. Otto A. Moses, Norman McCarty, Frank A. Magee, Jno. M. Pendleton, Charles W. Price, Ralph W. Pope, George M. Phelps, Jr., R. W. Ryan, L. Searing, C. E. Stump, A. C. Smith, G. H. Stockbridge, W. I. Wark, Joseph Wetzler, H. Wellington, G. L. Wiley, S. S. Wheeler, A. P. Wright.

Boston.—P. H. Alexander, Geo. W. Adams, Wm. T. Andrews, H. W. Burgett, W. I. Barker, N. H. Barker, G. H. Blodgett, Aaron D. Blodgett, G. W. Blodgett, Edward Blake, L. W. Burnham, Oscar S. Bussmann, E. S. Batcheler, Wm. Brophy, Chas. E. Bibber, F. J. Boynton, J. M. Betton, H. B. Cram, C. A. Coffin, Albert H. Chapman, H. A. Clark, F. E. Cabot, Frank E. Clark, T. W. Clark, J. H. Churchill, G. W. Davenport, G. W. Daniels, A. T. C. Daniels, T. B. Doolittle, — Davis, Jas. H. Dodge, Samuel Elder, H. H. Eustis, Charles Fuller, Frank Fuller, H. M. French, W. D. Finley, T. C. Frenyear, — Francis, B. S. Flanders, Robt. G. Fitch, E. I. Garfield, J. N. Godfrey, F. A. Gilbert, A. V. Garratt, C. N. Goward, Alex. S. Hayes, W. B. Hosmer, W. S. Hill, W. A. Hall, O. N. Howland, J. B. Hatch, Jr., G. H. Hartwell, William O. Howland, — Hutchings, Charles L. Ireson, J. Jacobs, E. W. Kellogg, W. R. Keifer, F. H. Kimball, J. L. Kimball, D. Killecutt, D. W. Lee, Thos. D. Lockwood, Thos. Leavitt, W. C. Livermore, A. F. Mason, C. J. Messer, S. P. Messer, W. H. Mendell, Irving S. Meredith, A. G. McCluir, J. B. Martin, Edmund Noble, Hon. Hugh O'Brien, Walter J. Paine, S. B. Paine, Albert C. Pond, W. E. Park, H. B. Prindle, H. G. Pratt, A. L. Russell, G. L. Richards, C. M. Ransom, R. F. Ross, E. J. Richards, M. F. Rogers, G. Richardson, G. S. Ross, Chas. W. Rand, Fred. Schlegelmilch, E. P. Sparrow, Leopold Schlegelmilch, Fred. J. Sawyer, — Sherburne, J. S. Sawtry, F. W. Sanderson, P. Sullinger, A. T. Starkey, W. M. Turner, G. F. Talcott, F. H. Thompson, H. J. Toland, H. S. Thornberry, A. F. Upton, S. P. Wardell, L. B. Wright, E. H. Williams, Geo. W. Waite, C. J. H. Woodbury, Henry J. Weil, J. J. Williamson, C. D. Wainwright, H. C. Wirt.

Providence, R. I.—Geo. H. Adams, F. H. Bradford, C. E. Bailey, E. M. Carhart, W. A. Huse, Henry B. Lytle, Marsden J. Perry, E. F. Phillips, R. T. Robertson, W. H. Sawyer, C. Sims, R. H. Whittier.

Cleveland.—W. H. Boulton, C. A. Brayton, J. B. Crouse, D. A. Dangler, E. B. Gethin, Webb C. Hayes, Wm. Henderson, W. H. Lawrence, J. J. Miller, Geo. W. Mansfield, F. E. Pettingill, E. F. Peck, Geo. W. Short, Wm. F. Swift, C. D. Smith, C. L. Wright.

Chicago.—G. W. Atkinson, S. A. Barton, Geo. S. Butte, Henry Bowen, W. J. Buckley, A. H. Brown, D. Gilbert Dexter, H. S. Glasier, F. W. Harrington, W. A. Kreidler, J. H. Shay, F. H. Soden, J. N. Thomas.

Philadelphia.—W. B. Buchanan, A. J. DeCamp, N. H. Edgerton, S. B. Hillman, Harry Hall, Stephen F. Holbrook, M. D. Law, Edwin C. Mullin, James A. Pentz, Anthony Reckenzaun, W. E. Sharpe, — St. Clair.

New Haven, Conn.—J. H. English, Will Hooper, Frank N. Hooper, C. D. Warner, Dr. Leonard Waldo.

Baltimore, Md.—Wm. Baxter, Jr., J. W. Darley, D. E. Evans, B. M. Greene, W. H. Harding, P. O. Keilholtz, J. Frank Morrison, Thomas McCoubray, Jr., M. N. Packard, Arthur Steuart.

Digitized by Google

Lynn.—V. R. Jones, A. H. Jones, E. W. Rice Jr., W. M. Rand, A. L. Rohrer. Prof. Elihu Thomson.
Brooklyn, N.Y.—C. Cooper, J. Flint.
Northampton, Mass.—A. M. McCallum, C. H. Pierce.
North Adams, Mass.—C. G. Richmond.
North Attleboro.—H. M. Daggett, Jr., L. W. Dillon.
Cambridgeport, Mass.—C. B. De La Vergne, E. H. Mulliken, Leonard Schaefer.
New Bedford, Mass.—G. Allen, Wm. Lewis, R. B. Taber.
Kansas City, Mo.—T. P. Bailey, C. S. Rusling, E. R. Weeks.
Woburn, Mass.—M. M. M. Slattery, N. J. Simons, J. E. Talbot.
Washington, D. C.—J. C. Edwards, R. W. Prentiss, Frederick W. Royce.
Pittsburgh, Pa.—S A. Duncan, W. C. Kerr, Geo. F Porter, T. C. Smith.
Hartford, Conn.—J. H. Dalzell, M. J. Wightman, Chas. K. Wead.
Detroit, Mich.—W. W. Leggett, J. M. Smith.
Buffalo, N. Y.—W. S. Frear, A. A. Noye.
Newark, N. J.—C. O. Baker, Jr.
Portland, Me.—C. A. Brown.
New Britain, Conn.—Thos. S. Brady.
Malden, Mass.—A. E. Bliss.
Waterbury, Conn.—G. M. Chapman.
Newton, Mass.—H. H. Cutler.
Jamestown, N. Y.—W. R. Caulkins, T. H. Smith.
Norfolk, Va.—Wm. W. Chamberlain.
Poughkeepsie, N. Y.—J. N. Candee.
Reading, Mass.—W. B. Dowse.
Worcester, Mass.—H. H. Fairbanks.
Liverpool, Eng.—W. H. Fleming.
Chelsea, Mass.—F. M. Gilley.
New Orleans, La.—S. J. Hart.
Gardiner, Me.—P. H. Holmes.
Savannah, Ga.—T. P. Keck.
U. S Navy.—Lieut. J. B. Murdock.
Bridgeport, Conn.—F. A. Mason.
Newark, N. Y. C. McIntire.
Birmingham, Conn.—Chas. Nettleton.
Charlestown, Mass.—G. B. Neal.
Paterson, N. J.—J. F. Noonan.
St. Louis, Mo.—G. W. Parker.
Duluth, Minn.—J. F. Patten.
San Francisco, Cal. -Geo. H. Roe.
Fort Wayne, Ind.—P. A. Randall.
E. Cambridge, Mass.—S. O. Richardson, Jr.
St. Louis, Mo.—Dan. R. Russell.
Bridgeport, Conn.—H. D. Stanley.
St. Joseph, Mo.—W. C. Stewart.
Syracuse, N. Y.—A. P. Seymour.
Waltham, Mass.—A. Webster.
Somerville, Mass.—H. F. Watts.
Springfield.—C. C. Webber.
Massillon, O.—C. A. Gates.
South Bend, Ind.—J. Durham.
Port Huron, Mich.—W. F. Davidson.
Springfield, Mass.—J. W. Hyde.
Pawtucket, R. I.—H. W. Hamblin.
Auburn, Me.—N. J. Jordan.
Fort Wayne, Ind.—J. A. Jenney.
Cincinnati, O.—F. Amos Kelley.
Taunton, Mass.—D. L. Mitchell.
Bridgeport, Conn.—J. M. Orford.
Troy, N. Y.—J. A. Powers.
Scranton, Pa.—Robt. Reaves.
Great Barrington, Mass.—W. Stanley, Jr,
Brookline, Mass.—C. S. Spaulding.
Danbury, Conn.—E. T. Wightman.
Mansfield, Mass.—L. E. Razee.
Elgin, Ill.—W. Hubbard.
Springfield, Ill.—A. L. Ide.

GAS LIGHTING BY ELECTRICITY.

The Electric Gas Lighting Co. of Boston, and A. L. Bogart, of New York, have become the owners of U. S. letters patent: to Wm. A. Pitt, No. 139,811; A. T. Smith, re-issue No. 7,249; A. L. Bogart, 180,832; A. L. Bogart, No. 180,833; A. L. Bogart, No. 202,694; J P. Tirrell, No. 232,661; H. A. Packard, No. 225,071; F. V. Sanford, No. 232,304; and an undivided interest in Heyl and Diehl, No. 116,044; and the sole interest in E. E. Bean, No. 108,434; relating to hand-lighting apparatus. They announce that said letters patent control and cover all varieties of electric hand-lighting burners in which the gas is both turned on, and ignited by a primary spark, at a single movement by hand; by operating both gas-cock and electrode, directly or indirectly, by the key of the gas-cock, whatever its form, or by an angle lever and bar, or by a ratchet wheel whose revolution brings the electrodes in contact, and alternately opens and closes the gas-cock; and also all forms of simple lighters in which, by means of a bar, chain, or thumb-cock, a moveable electrode is brought into contact with a fixed electrode; and those in which the moveable electrode is withdrawn from contact by means of a spring or its equivalent.

They give notice that no corporation, firm or person is authorized to manufacture any of these varieties of apparatus, except themselves, and the Boston Electric Co., of Boston, as sole licensee.

They state that their purchase of the above letters patent has been compelled by the hardihood of infringers who have profited by litigation between owners of letters patent of undoubted validity, but undetermined relative scope, to infringe the rights of both parties.

TELEGRAPHING FROM A POLE.

Last summer we had occasion to inform our readers that notwithstanding the exclusive contract between the Western Union and the Monmouth race track, the Baltimore & Ohio was enabled to furnish its customers with the race news by means of establishing an office on top of a high tree, from which a view of the track was had. This year the Western Union leased the tree ahead of the Baltimore & Ohio, paying $40 for it, which covered the racing season, and was supposed to have shut out the rival. The Western Union was enjoying a good laugh at the expense of the Baltimore & Ohio, but to the knowing ones it was thought strange that the latter enterprise would allow itself to be outdone without making any efforts whatever. Just previous to the first day's races a piece of ground was leased by the Baltimore & Ohio, upon which was planted a pole. Mr. W. A. Northrup, a well-known old-time telegrapher, can be seen any race day perched on top of that pole, reporting the Monmouth races with more ease and with better results and quicker time than ever before. Besides being an expert operator, Mr. Northrup is a first-class lineman, which makes him at all times a valuable man to any company. The Baltimore & Ohio is enterprising to an unusual degree.—*The Electric Age.*

THE "OLD TIMERS" ASSOCIATION.

The annual convention of the Old Time Telegrapher's Association, including the United States Military Corps of Telegraphers, was held in Philadelphia, August 17 and 18. Some fifty members were present, among whom were to be found many who had risen to prominence in the telegraphic world during the past twenty years.

Among the new members elected were: Chief Walker, of the city electrical department, Mr. W. H. C. Hargrave, of the associated press, and Mr. Thomas A. Edison.

Mr. David Brooks, made an address advocating government control of the telegraph system of the country.

Mr. Brooks was unanimously elected president of the "Old Timers" for the ensuing year.

A message of greeting was sent to Charles E. Taylor, of Frankfort, Ky., the originator of the Old Timers' organization, and a committee of three was appointed to arrange for the next place of meeting. Irwin Dugan, of Louisville, was elected vice-president, and William J. Dealy, manager of the Western Union office, New York, secretary and treasurer. The report of the secretary and treasurer showed a balance of nearly $600 on hand.

The military corps convened in the afternoon. The effort is still being made by them to obtain some recognition as a separate division of the army from the government.

On Thursday all the delegates made a visit to the city's electrical department and other points of interest, and in the evening a banquet was given at the Union League Club House. The toast "The Old Timers" was responded to by J. D. Reid, of New York; "Military Telegraph Operators," by William D. Wilson, of Philadelphia; "Telegraph Operators of To-Day," by H. C. Robinson, of Philadelphia; "The City of Philadelphia," by common councilman John Bardsley; "The Ladies," by C. C. Hine, of New York; "God Bless Us All," by A. H. Bliss, of Chicago, and "The Press" by J. B. Taltavall, of New York.

THE NEW YORK ELECTRIC CLUB.

The last sea-shore meeting of the Electric Club, was held at the Hotel Brighton, Coney Island, Thursday evening, August 18th. Dinner was served at 7 o'clock, and heartily enjoyed by the members and friends in attendance. Among the guests present were Lieut. Zalinski, U. S. Army; Capt. Severo Gomez Nunez, of the Spanish army and Lieut. Remigio Goininez y Zapatero, of the Spanish navy, both the latter now stationed at Havana.

A paper on Secondary Batteries, of much interest, was read by Dr. Louis Duncan, of Johns Hopkins University, and discussed by Dr. Otto Moses, Messrs. J. M. Pendleton, C. O. Mailloux and A. J. De Camp.

FIFTH MEETING OF THE EDISON ASSOCIATION.

The fifth semi-annual convention of the Association of Edison Illuminating Companies was held at Altoona, Pa., on Aug. 10.

The President, Mr. John I Beggs, congratulated the association on the large increase of its growth. The following officers for the ensuing year were elected: president, John I. Beggs, New York city; vice-president, F. A. Copeland, LaCrosse, Wis.; secretary, J H. Vail, New York city; treasurer, Wilson S. Howell, New Brunswick, N J.; executive committee, P. B. Shaw, Williamsport; Wm. J. Hammer, Boston, Mass.; C. H. Lindenberg, Columbus, O.; J. R. McLaughlin, Detroit, Mich.; A. L. Smith, Appleton, Wis.

Important topics relating to incandescent lighting were fully and freely considered. Among the papers read and discussed were the following:

"The Edison Municipal System of Long-Distance Lighting," by W. J. Jenks, manager of the municipal department Edison Electric Light Co.

"The Commercial Value of Electric Motive Power, as supplied from Edison Central Stations," by Wm. J. Hammer, manager Edison Electric Illuminating Co., Boston, Mass.

"The Regulation of Electrical Pressures and Reduction of Lamp Breakage," by John W. Howell, electrician Edison Lamp Co.

Digitized by Google

"The Value of the Storage Battery as an Adjunct to Central Stations," by J. H. Vail, gen'l sup't Edison Electric Light Co.

"The Convenience, Economy, Luxury and Pleasure derived from the Edison Light, and the best Practice in its Application," by William S. Howell, supt. Edison Electric Illuminating Co., New Brunswick, N. J,

Careful consideration was given to the subject of the best practice of wiring buildings for the incandescent light, and the following resolution was unanimously adopted:

Resolved, That in consequence of the fact that "Underwriters'" wire, so-called, has been shown by experience to be unreliable and treacherous in its action, and we regard it as introducing injurious possibilities in all interior wiring; we discountenance its use and urge upon the attention of the companies composing this association the desirability of abolishing it entirely in the work of wiring buildings over which they severally exercise a control."

The progress of the Edison patent suits and their general condition was fully described by president Johnson, and the following resolution was unanimously adopted by the convention:

Whereas, The present status of the suits prosecuted by the Edison Electric Light Co. against the infringers of their patents (which suits have in some cases been several years in the courts) has been fully stated before this convention: and

Whereas, We, having been licensed to hold exclusive rights in our respective territories, have thereby acquired a partnership interest in the general prosperity of the Edison Electric Light Co., as depending upon the validity of the patents for our protection against the destructive effects of unscrupulous competition:

Resolved, That we, the Association of Edison Illuminating Companies, in convention assembled, desire to express our hearty commendation of the energetic efforts and policy of the parent company and the progress which has resulted, as shown by an exhaustive report made to us by president Johnson.

Resolved, That we extend to the Edison Electric Light Co. our cordial and moral support, and an assurance of our conviction that the present unprincipled rivalry now affecting some of the local companies here represented will be speedily terminated by decisions in favor of the Edison patents, thus bringing to justice all who have ignored the rights granted by the patent laws of the United States to the Edison company, as the heirs of Mr. Edison's electric light invention.

Other interesting subjects were discussed, viz: distribution of currents, overhead and underground systems; regulation of currents and pressures, economy of fuel and labor; comparative merits and commercial value of the three-wire and converter systems. Every member present expressed himself more than pleased with the prosperity of the Edison business and the growth of the association. The convention adjourned at 7 P. M. on Aug 11. The next meeting will be held at Chicago, Ill., Feb. 8, 1888.

OBITUARY.

JOSIAH P. FITCH, the well-known patent lawyer, of this city, died on August 21. He was born in Vermont in 1817, and educated at Hamilton College, Clinton, N. Y. He settled in Rome, N. Y., from 1845 to 1851, and while there owned and edited the Rome *Citizen*. Mr. Fitch was admitted to the bar from the office of O. B. Matteson, of Utica. He came to New York in 1856, and turned his attention to patent cases. He has been counsel for the Gamewell Fire Alarm Company, for the Western Union Telegraph Company, and for Charles Grafton Page, the associate of Prof. Morse, the inventor of the telegraph. Mr. Fitch had in his possession at the time of his death Page's original set of instruments. He was prominent in several electric light litigations, and up to the time of his death was conducting some very important cases

THE ELECTRICAL CLAM-BAKE.

The meeting of the National Electric Light Association at Boston suggested to president Eugene F. Phillips, of the American Electrical Works, the propriety of fixing the date of the ninth annual clam-bake about a month earlier than usual. One hundred and fifty guests were present, who showed their warm appreciation of Mr. Phillips' hospitality by their happy countenances as they gathered on board the 11 o'clock boat at Providence, on the morning of August 12th, bound for the beautiful grounds of the Vue de l'Eau Club, at Silver Spring, on the eastern shore of Narragansett Bay. Upon arriving at their destination, the usual ample preparations were found to have been made for enabling all to forget the cares of business; and rusty base-ball players made their customary attempt to demonstrate how little they knew about the national game, while alleged marksmen, with arrows and bullets, added a spice of danger to the pleasures of the day.

The accommodations of the dining-room were exactly equal to the emergency, and at half-past three the event of the day was ushered in by the welcoming words of the host, who introduced Dr. Otto A. Moses as the toast-master, who most successfully combined the intellectual and gastronomic courses in his happiest style. In response to his invitation, the gentlemen called upon for remarks promptly aided in making the occasion a pleasant one by briefly and pithily giving their personal impressions of the effects of clam-eating. Among those who were not too full for utterance were Messrs. A. Reckenzaun, Thomas D. Lockwood, Henry C. Davis, Frank Ridlon, P. H. Alexander, Ralph W. Pope, W. P. O'Donoghue, and Col. Ransom. John I. Sabin, of San Francisco, was present in spirit through a telegraphic order for two baskets of champagne.

The menu card was an artistic combination of pictorial representations of the various ingredients which enter into the composition of a Rhode Island clam-bake. Each was enclosed in the shell of a cannon fire-cracker, and went off quietly in the pockets of the guests as they left the festive scene about 6 o'clock. The general verdict was that the last clam-bake was equal in every respect to its predecessors, and all were willing to repeat the experience whenever the opportunity offers.

ELECTRIC RAILWAYS IN AMERICA.

Now in Operation.

APPLETON, WIS.—Appleton Electric Street Railway; overhead conductor, 4½ miles. 5 motor cars. Van Depoele system.
BALTIMORE, MD.—Union Passenger Railway Co.; overhead conductor. Daft system.
DENVER, COL.—Denver Tramway Co.; conduit, 4 miles. Short-Nesmith series system.
BINGHAMTON, N. Y.—Washington Street and State Asylum Electric R. R.; overhead conductor, 5½ miles. Van Depoele system.
DETROIT, MICH.—Detroit Electric Railway Co.; overhead conductor, 2 miles, 4 motor cars. Van Depoele system. Highland Park Railway Co.; overhead conductors, 3 miles, 2 motor cars.
GRATIOT, MICH.—Gratiot Electric Railway Co.: overhead conductor, 1 motor car. Van Depoele system.
KANSAS CITY, MO.—Kansas City Electric Railway Co. Henry system.
LIMA, O.—Lima Street Railway Motor and Power Co.; overhead conductor, 6¼ miles, 7 motor cars. Van Depoele system.
LOS ANGELES, CAL.—Los Angeles Electric Railway Co.; overhead conductor, 5 miles, 4 motor cars. Daft system.
MONTGOMERY, ALA.—Capital City Electric Street Railway Co.; overhead conductor, 11 miles, 20 motor cars. Van Depoele system.
PORT HURON, MICH.—Port Huron Electric Railway Co.; overhead conductors, 2¾ miles, 3 motor cars. Van Depoele system.
SCRANTON, PA.—Scranton Suburban Railway Co.; overhead conductor, 2¼ miles, 3 motor cars. Van Depoele system.
WINDSOR, CAN.—Windsor and Walkerville Electric Railway Co.; overhead conductor, 1½ miles, 1 motor car. Van Depoele system.

Constructing or Under Contract.

Ansonia, Conn.
Asbury, Park, N. J.
Allegheny, Pa.
Dayton, O.
Harrisburg, Pa.
Lakeside, O.
Los Angeles, Cal.
Middletown, Conn.
Mansfield, O.
New York, N. Y.
Pittsburg, Pa.
Richmond, Va.
San Diego, Cal.
St. Catherines, Can.
St. Joseph, Mo.
Worcester, Mass.
Woonsocket, R. I.
Wilmington, Del.
Wichita, Kan.

New Roads Projected.

Alameda, Cal.
Atlanta, Ga.
Bangor, Me.
Bellevue, Pa.
Biddeford, Me.
Boston, Mass.
Bridgeton, N. J.
Bayonne, N. J.
Brookline, Mass.
Brooklyn, N. Y.
Butte, Mont.
Birmingham, Ala.
Carbondale, Pa.
Chicopee, Mass.
Cincinnati, O.
Coney Island, N. Y.
Elizabeth, N. J.
Eureka, Cal.
East Cambridge, Mass.
Framingham, Mass.
Galveston, Tex.
Flushing, N. Y.
Fort Smith, Ark.
Jersey City, N. J.
Jacksonville, Fla.
Lincoln, Neb.
Muncie, Ind.
Newton, Mass.
Newton, Kan.
Oakland, Cal.
Ontario, Cal.
Orange, N. J.
Philadelphia, Pa.
Plainfield, N. J.
Pensacola, Fla.
Port Chester, N. Y.
Reading, Pa.
Rochester, N. Y.
Rockaway, N. Y.
Scranton, Pa.
San Francisco, Cal.
San Jose, Cal.
San Antonio, Tex.
St. Augustine, Fla.
Tacoma, Wash. Ter.
Tiffin, O.
Winston, N. C.
Westfield, Mass.

THE VAN DEPOELE system has been adopted at Ansonia, Conn., where the Derby Horse Railway Co. expect to have the electric motor cars running September 1. Four passenger and eight freight cars will be the output this season.

THE WEST END STREET RAILWAY CO. of Boston, will very shortly receive the car constructed for them in New York, by the Stephenson company, and equipped with Sprague motors and Julien storage batteries.

BROOKLYN CITY R. R. CO. The recent break-down of the cable line in Park avenue, has set some leading directors of the company to thinking of the advantages of electric motors.

PHILADELPHIA. Successful experimental trips are kept up with the car built for Messrs. Wharton, using Sprague motors and storage batteries of the Electrical Accumulator Co. Mr. A. Reckenzaun, whose extensive experience in electric locomotion, on both land and water, is familiar to readers of electrical journals, has directed the recent experiments of Messrs. Wharton.

Digitized by Google

THE BENTLEY-KNIGHT system will be used at Allegheny, Pa., by the Observatory Hill Pass. Railway Co. The line of 4 miles is well underway. They expect to run the road, October 1st.

MANUFACTURING AND TRADE NOTES.

THE C. & C. ELECTRIC MOTOR Co. have got up a complete motor and fan outfit for use on electric light circuits. The motor is inverted, thus making a base of the neutral portion or yoke of the field magnets. The armature shaft is thus elevated sufficiently to give the 12-inch propellor fan clearance, so avoiding belting. A key-socket is placed on the top, in which can be inserted either a short circuit plug or a lamp of proper resistance. Automatic fans are an agreeable subject nowadays.

THE SIMPLEX ELECTRICAL Co., 145 Broadway, New York, and 328 Washington street, Boston, is successfully introducing its "Campbell" insulated wires among electric light people, and earning a place in the numerous list of competitors in this field.

THE BABCOCK & WILCOX boilers will be used in the three new stations of the Edison Electric Illuminating Co., of New York, a contract having been made July 27th. The stations are planned for an aggregate of 8,700 h. p. The Babcock & Wilcox boilers have been in use at the Pearl street station of the Edison company since 1881, and have proved highly satisfactory to the managers of the lighting company. A circular recently issued by the manufacturers of these boilers gives a table exhibiting the results of some thirty tests of efficiency made at many places and extending over a period of nine years. The table indicates a very high efficiency of evaporation.

THE following is a list of central station plants which have been installed by the Westinghouse Electric Company, of Pittsburgh, Pa., up to September 1, 1887, with the number of lamps in each:

New Hampshire, Littleton, 650; Massachusetts, Pittsfield, 1,300; Connecticut, Hartford, 1,950; Torrington, 650; New York, Kingston, 1,950; Buffalo, 1,300; Staten Island, 2,600; New Jersey, Plainfield, 2,600; Trenton, 5,200; Pennsylvania, Greensburgh, 600; Tyrone, 300; Carbondale, 1,000; Pittsburgh, 7,800; South Side (Pittsburgh), 3,000; Allegheny, 2,600 (being increased to 10,000); West Virginia, Wheeling, 1,300; Parkersburgh, 1,300; Charleston, 650; Maryland, Easton, 650; Ohio, Steubenville, 650; Texas, Galveston, 1,300; Louisiana, New Orleans, 3,900; Georgia, Savannah, 1,300; Florida, Tampa, 650; Wisconsin, Beaver Dam, 650; Colorado, Ouray, 300; Ontario, Cornwall, 650.

THE following central station plants are now under construction by the same Company:

Portland, Me., 650; Springfield, Mass., 1,950; Schenectady, N. Y., 5,200; New York, N. Y., 10,000; Morristown, N. J., 650; East Liberty, Pa., 5,200; Richmond, Va., 650; St. Louis, Mo., 5,200; Minneapolis, Minn., 6,500; Denver, Col., 6,500; Colorado Springs, Col., 1,300; Lincoln, Neb., 1,950; Chattanooga, Tenn., 650; Nashville, Tenn., 650; Sheffield, Ala., 650; Austin, Tex., 2,600; making a total completed and under construction of 44 central stations, aggregating 109,200 lamps.

THE Westinghouse company are putting in quite a number of large isolated plants on the alternating system, among which are the following: Manning, Maxwell & Moore, Plainfield, N. J., 650; Baldwin Locomotive Works, Philadelphia, 2,600; Strawbridge & Clothier, Philadelphia, 1,300; Westinghouse Electric Co., Pittsburgh, 2,000.

INVENTORS' RECORD.

Prepared expressly for THE ELECTRICIAN AND ELECTRICAL ENGINEER, *by* Pope, Edgecomb & Terry, *Solicitors of Patents for Electrical Inventions, 11 Wall Street, New York city.*

CLASSIFIED LIST OF UNITED STATES ELECTRICAL PATENTS.

From July 19th to August 16th, 1887 (inclusive).

Alarms and Signals:—*Burglar-Alarm*, B. F. Hough, 367,523, August 2, same, 368,336, August 16. *Electrical Annunciator*, W. C. Poole and J. Schnepf, 367,925, August 9.

Clocks:—*Electric Programme-Clock*, A. J. Reams, 367,663, August 2. *Magnetic Clock*, D. Drawbaugh, 367,898. *Electric Clock System*, C. L. Clarke, 367,960, August 9.

Conductors, Insulators, Supports and Systems:—*Insulating Compound*, J. Tatham, 366,898, July 19. *Insulator*, H. K. Ruger, 367,164, July 26. *Electric Conductor*, T. S. Reed, 367,548. *Terminal for Electric Cables*, R. H. Widdicombe, 367,734. *Conduit for Electric Wires and Cables*, G. D. Sutton, 367,763, August 2. *Cable-Hanger*, F. E. Degenhardt, 368,136, August 9. *Electric Wire Clamp Insulator*, J. R. Fletcher, 368,284, August 16.

Distribution:—*System of Electric Distribution*, E. Thomson, 367,469. *Coupling Compound Dynamo-Electric Machines*, same, 367,471, August 2. *Coupling Dynamo-Electric Machines*, same, 367,866, August 9. *Electric Distribution by Secondary Batteries*, W. Hochhausen, 367,630, August 2.

Dynamos and Motors:—*Dynamo-Electric Machine*, J. W. Easton, 366,941, July 19. *Armature for Dynamo-Electric Machines*, M. J. Wightman and O. Urban, 367,080. *Means for Connecting Engines and Dynamos*, A. W. Schleicher, 367,241, July 26. *Regulator for Dynamo-Electric Machines and Motors*, E. Thomson, 367,470. *Electric Motor*, A. W. Meston, 367,651, August 2. *Commutator for Electric Generators*, O. B. Shallenberger, 367,934, August 9.

Galvanic Batteries:—*Inclosing Cell for Electric Batteries*, C. A. Faure, 366,717, July 19. *Galvanic Battery*, H. I. Harris, 367,294, July 26, H. J. Brewer, 367,359, J. Serson, 367,451, P. R. de F. D'Humy, 367,705, August 2. *Binding-Clamp for Battery Electrodes*, H. J. Brewer, 367,956. *Primary Battery*, S. W. Maquay, 368,093, August 9. *Galvanic Cell*, W. E. Case, 368,-191. *Battery Connection for Electric Conductors*, P. Bowe, 368,321, August 16.

Ignition:—*Electric Gas-Lighting System*, G. F. Perkins and J. P. Hurley, 367,-841, August 9.

Lamps and Appurtenances:—*Electric-Arc Light*, S. Doubrava, 366,938. *Electric Lamp*, C. A. Homans, 367,002, July 19. *Electric Arc Lamp*, M. J. Wightman and H. Lemp, 367,598, August 2. *Device for Holding Incandescent Lamp Filaments while the Same are being Flashed*, H. Lemp and M. J. Wightman, 366,673, July 19. *Dash-Pot for Arc Lamps*, same, 367,081. *Switch and Automatic Cut-Out*, same, 367,082, July 26. *Electric Light Switch-Board*, C. E. Scribner, 367,670, August 2.

Measurement:—*Apparatus for Measuring Electricity*, G. Forbes, 366,824, July 19.

Medical and Surgical:—*Voltaic Belt*, C. B. Judd, 366,777, July 19. *Electric Bell*, A. Owen, 368,546, August 16.

Metallurgy:—*Deposition of Platinum by Electricity*, W. A. Thoms, 367,731, August 2.

Miscellaneous:—*Electric Boot-Blacking Apparatus*, H. R. Gardner, 366,660, July 19. *Electric Test System*, J. W. Frost, 367,205. *Electrically-Actuated Vibrator*, F. B. Colman, 367,270. *Fire-Extinguisher*, C. H. Shaffer, 367,323. *Means for Individually Controlling a Number of Devices by Electricity*, C. Baxter, 367,332. *Electric Smelling-Bottle*, L. B. Fuller, 367,341. *Lightning-Rod Brace*, L. L. Mast, 367,348. *Apparatus for Extinguishing Fires on Railroad Trains*, J. F. McLaughlin, 367,350, July 26. *Electric Pyrotechnics*, J. H. Irwin, 367,402. *Electrical Ore-Detector*, L. Mellett, 367,-422. *Electric Ore Indicator*, L. Mellett and J. Prince, 367,541. *Lightning Arrester for Protecting Oil-Tanks*, D. O'Brien, 367,435. *Tubular Axle and Method of Manufacturing the Same*, A. Paterson, 367,438. *Electrical Type-Writer*, J. F. McLaughlin, 367,650. *Cable-Rack for Switch-Boards*, J. A. Seely, 367,730, August 2. *Arrester for Electric Currents*, J. P. Freeman, 367,901. *Electric Coupling*, C. Runels, 367,931. *Inclosing-Case for Electric Machines*, C. H. Hinds, 368,088. *Binding-Post*, P. J. Higgins, 368,149, August 9. *Art of Converting Chemical Energy into Electrical Energy*, W. E. Case, 368,190. *Electrical Piano*, G. F. Dieckmann, 368,195. *Electric Lock*, T. B. Hornaday, 368,212. *Circuit-Changer*, C. W. McDaniel, 368,221. *Means for Dissipating Electricity for Printing-Machines*, L. E. Bathrick, 368,315. *Electric Rock-Drill*, H. N. Marvin, 368,405 and 368,-406. *Synchronal Motor for Electrical Type-Writers*, J. F. McLaughlin, 368,411, August 16.

Railways and Appliances:—*Electric Bell-Coupler for Steam Railroads*, J. M. Duby and J. L. Edmester, 366,654. *Combined Street Railway Rail and Conduit*, G. C. Bolgiano, 366,811, July 19. *Electric Locomotive*, E. S. Shaw-367,069, July 26. *Roof for Suspended Electric Conductors*, C. J. Van De-poele, 367,475. *Electric Railway-Signal*, E. M. Chase, 367,598. *Electric Magnetic Car-Brake*, J. Herrington, 367,627. *Electro-Magnetic Railway-Brake*, C. J. Van Depoele, 367,685, August 2. *Railway-Signal*, I. H. Brown, 368,066, August 9; G. D. Burton and C. H. Magoon, 368,512, August 16. *Electro-Mechanical Brake*, G. T. Woods, 368,265, August 16.

Telegraphs:—*Quadruplex Telegraphy*, G. Smith, 366,695. *Telegraph Instrument*, W. A. Melbourne, 366,970, July 19. *Acoustic Telegraph*, J. H. Irwin, 367,042, July 26. *Printing Telegraph Receiver*, H. Mahnken, 367,720, August 2. *Printing Telegraph*, J. H. Linville, 368,217. *Submarine Signal*, J. M. Batchelder, 368,272. *Telegraph Key*, D. Kunhardt, 368,312. *Telegraphic Transmitter*, W. H. Bloom, 368,450. *Printing Telegraph*, H. Mahnken, 368,-541, August 16.

Telephones, Systems and Apparatus:—*Attachment for Telephones*, T. C. Bradford, 366,994. *Ear-Piece for Telephones*, G. A. Huewe, 367,003 and 367,004, July 19. *System of Telephonic Intercommunication*, J. A. McCoy, 367,219, July 26. *Telephone Exchange Apparatus*, W. W. Goodridge, 367,-754, August 2.

The India-Rubber and Gutta-Percha Insulating Co.

MANUFACTURERS OF

ALL KINDS OF INSULATED WIRES AND CABLES.

Guaranteed to give satisfactory service under ground and over head. Specially adapted for CHEMICAL WORKS, PAPER MILLS, DYE WORKS, COAL MINES, Etc., Etc. Prices and Samples on application.

W. M. HABIRSHAW, General Manager.

No. 159 FRONT STREET. NEW YORK CITY.

Digitized by Google

THE ELECTRICIAN
AND
ELECTRICAL ENGINEER.

Conducted by F. L. POPE. G. M. PHELPS, JR., Associate Editor.

PUBLISHED MONTHLY BY

THE ELECTRICAL PUBLISHING CO.,

115 Nassau Street, New York city.

European Agent, F. H. WEBB, 4, The Sanctuary, Westminster, London, S.W., Eng.

TERMS OF SUBSCRIPTION.

United States and Canada, - - -	per annum,	$3.00
Four or more Copies, in Clubs (each) - - - -	"	2.50
One Copy, Four Months, - - - - - -		1.00
Great Britain and other Foreign Countries within the Postal Union	"	4.00
Single Copies, - - - - - - - -		.25

[*Entered at the Post Office at New York, N. Y., as second class mail matter.*]

EDITORIAL ANNOUNCEMENTS.

Addresses.—*Business letters should be addressed and drafts, checks and post-office orders made payable to the order of the* ELECTRICAL PUBLISHING CO. *Communications for the attention of the editors should be addressed,* EDITOR OF THE ELECTRICIAN AND ELECTRICAL ENGINEER, 115 *Nassau Street, New York city.*

Communications *suitable for our columns will be welcomed from any quarter. Discussions of subjects relating to all branches of electro-technical work, by persons practically acquainted with them, are especially desired. Unavailable and rejected manuscripts will be returned only when accompanied by the necessary postage.*

Advertisements.—*We can entertain no proposition to publish anything for pay, or in consideration of advertising patronage, except in our advertising columns. Our editorial columns will express our own opinions only, and we shall present in other columns only such matter as we consider of interest or value to our readers*

NEW YORK, OCTOBER, 1887.

PAN-ELECTRIC NONSUITED.

THE decision rendered in the United States Circuit Court at Boston, September 26th, in the Pan-Electric government suit to annul the Bell telephone patents, sustains the demurrer of the American Bell Telephone Co., and dismisses the case.

The opinion was written by Judge Colt. The nature of the allegations of the complaint, defect of priority in the invention, fraud in obtaining the patents, are well known to our readers. The prayer of the bill was that the court decree that said patents are and have been since the date of sealing and delivery null and void; that they were wrongfully procured to be issued by means of fraud on the part of Bell, and that the American Bell Telephone Co. be perpetually enjoined from setting up any right of claim under said letters of patent.

The Court said :—

The first and principal question raised by this demurrer is whether in the absence of any specific statute the United States, by the direction of the attorney-general can maintain a bill in equity to cancel a patent for an invention. The question is by no means free from difficulties and the decision of the courts in the few cases where the point has been raised are conflicting. Upon consideration we are of the opinion that the carefully considered decision of Judge Shipley of this circuit in the Attorney-General *vs.* Stamford Chemical Works, Bannard & Adolphus, 298, to the effect that the government in the absence of any express statute has no power to bring a bill in equity to cancel a patent, is sound, and should be followed by this court in this case. Our whole patent system rests upon a constitutional provision and the statutes passed by Congress.

After a careful examination of the Constitution and acts of Congress, and the decision of cases bearing upon such acts and articles of the Constitution, the judge arrives at the conclusion that "Congress could have provided that the Government should have the right to bring suit to cancel a patent for an invention on the ground of fraud, but Congress has not seen fit to incorporate such a provision into the patent laws, and that is sufficient answer to this bill. We think, therefore, that the history of patent legislation under the Constitution tends to show that Congress never intended this power to be exercised under the present law."

He further says that if there be any power in the Government to cancel a patent for an invention, it must exist by implication and must spring from the general principles of equity jurisprudence; and he here discusses the history and character of this power, and the procedure under it in England. The power to cancel a patent in England, he states, was in the nature of a royal prerogative, and the proceeding was by writ of *scire facias*. After an elaborate discussion of the authorities cited by counsel, he concludes as follows :

The main grounds on which the validity of the Bell patents are attacked in this bill can be raised in an infringement suit brought under section 4,920 of the Revised Statutes of the United States.

The necessity which might possibly arise in some cases for the exercise of this power by the Government seems to be wanting in this case. The question of power raised in the bill is an important one and in view of the conflict of authority, it can only be definitely settled by the Supreme Court. It is our duty in the present case, unless clearly satisfied that Judge Shipley was wrong, to follow the law as established in this circuit, in the most learned and exhaustive opinions to be found on the subject. The demurrer to the bill is sustained, and the bill is dismissed.

This dismissal of the suit to annul the Bell patents, affords the administration a very convenient opportunity to withdraw from the unpleasant predicament into which it has been betrayed by the superserviceableness or obtuseness—whichever it may be—of the Attorney-General. It is possible that an appeal to the Supreme Court may be made, but we do not look for such action. In the condition of affairs consequent upon this decision the administration may well take the ground, expressly or by implication, that having gone so far as to test in court its legal right to sue a patentee for fraud, and this having been decided adversely, its duty in behalf of the interests of the public has been discharged, and the issues in question may be left, as we have always maintained they should be, to be determined by the action of the ordinary judicial machinery.

SUBWAYS IN NEW YORK.

IT is sometimes more important to get a thing done at once than to get it done in the most perfect way. The burying of all electric wires in New York is not such a thing. The desirability, even the necessity, of providing some better system than the existing pole lines is very generally admitted. The objections to pole lines in the streets are so many, and have been so often recited in the public press that everybody is familiar with them. Yet all of them together do not constitute a public inconvenience so pressing as to justify hasty work, on immature plans, such as that undertaken by direction of the Board of Electrical Control.

Since the public agitation for the removal of the pole lines, followed by the establishment of the Subway Com-

Digitized by Google

mission, we have several times expressed our opinion that the significance and scope of the proposal to put all the electric wires in the city underground was very imperfectly apprehended by the public and by the authorities undertaking to effect it. The success of electric motors during the past two years, establishing the certainty that they will be largely employed for power throughout the city, and the development during the same period of successful means for a wide distribution of the incandescent electric light from central stations, have very largely added to the magnitude and difficulty of the problem. It has become very clear that a system of underground electric conductors will be required sufficiently comprehensive to provide facilities far in excess of the relatively simple requirements of the telegraph and telephone service. Such system must include provision for conductors of heavy currents for the supply of power and light for general distribution throughout the city. The problem seems scarcely less in magnitude and difficulty, and in its bearing upon the welfare and beauty of the city, than that of rapid passenger traffic. The inadequacy of our means of transit is apparent to every one who travels to and fro within the city; the capacities of the elevated roads are far overtaken by the requirements of the public.

We are very confident that if the work of providing the city with a system of underground electric conductors be left to the present methods of the Board of Electrical Control (substantially the old Subway Commission) and to their direction, our last state will be worse than our first. There is yet no evidence of the adoption of a comprehensive and thoroughly worked out plan, such as should be perfected before any extensive work is undertaken. Some elements of the problem seem to have been scarcely considered—for instance the distribution of wires from the conduits to blocks of buildings. It cannot be said that any conduit system has been shown to be capable of meeting permanently the difficulties of a system of general distribution. Of the several conduit systems approved by the board, some may prove serviceable for a long time, but all the work must still be considered tentative.

It is our conviction that no system of "drawing in" conduits will avail as a permanent solution of the complex and difficult problem. It seems to us more than probable that for principal routes, where many conductors, of various kinds and sizes, and for many different purposes, must be provided for, resort must be had to some form of tunnel, large enough to contain wires and cables hung in such a way that they shall be accessible at all points, and also large enough to permit the passage through it of linemen and small trucks for conveyance of conductors. That a way to accomplish the desired end of ridding the streets of pole lines, and to place all, or nearly all, electric conductors underground with safety and convenience, and to the satisfaction of the public, as well as of the electric companies, we make no doubt; but the undertaking should have the careful attention of electrical and engineering talent of the highest order, and should be carried out under the control of those who take a long look ahead and are more anxious to achieve a great public work carefully and thoroughly, than to satisfy an unreasonable public clamor for burying all wires at once.

The correspondence between the United States Electric Lighting Co. and the Westinghouse Electric Co. printed in another column, will strike most people as a somewhat novel preliminary to a patent suit.

We sometimes hear it said that electric lighting in England is at a standstill. This, we are convinced from personal observation, is an error. A year ago, last winter, while temporarily sojourning at the Midland Grand Hotel, in London, our morning slumbers after 9 A. M. were disturbed by electric light wiremen engaged in drilling a hole through a brick partition near by, for the passage of the conductors. Last winter, after the lapse of thirteen months we were there again, and were gratified to observe that the dining-room and reading-room were wired and the lamp fixtures being put up, and now it gives us pleasure to announce, on the authority of a late issue of an "esteemed transatlantic contemporary," that the greater portion of the entire plant of 250 incandescent lamps is now in successful operation. The hasty and inconsiderate manner in which plants of this size are often installed in this country needs no comment, and we therefore refrain from making any.

We were, it seems, in error last month, in saying that an electric railway conductor fell at Montgomery, Ala., occasioning the death of a horse. It was another wire which got into contact with the railway wire. But, as our old professor was wont to remark, "the principle nevertheless remains the same." A due regard to the safety of the public, requires that uninsulated conductors should not be suspended above the streets of a town, having a potential several hundred volts above that of the earth. A single fatal accident will work serious harm to electric railway interests, while the difficulty and expense of avoiding such a possibility are not enough to justify any limitation in taking precautionary measures.

The electrical exhibition of the New York Electrical Society, in connection with the annual fair of the American Institute, will, when fully under way, constitute an extremely interesting display, and will offer a better opportunity than has ever before been provided in New York for the public to become acquainted with the numerous modern applications of electricity to useful purposes. The electrical exhibit occupies about half of the floor of the main building of the institute. The list of exhibitors includes more than 60 establishments, and represents well nigh the whole field of electrical work. One of the most interesting features will be found in the historical collection of apparatus, which will embrace original apparatus of Franklin, Henry, Morse, and other distinguished investigators and inventors.

It is announced that an agreement has been consummated between the Westinghouse Electric Co. of Pittsburg and the Thomson-Houston Electric Co. of Boston, by which these two corporations are hereafter to work in harmony. Some particulars of the terms of the agreement are given in another column. It is an auspicious sign for the future of electric lighting interests, when we find two of the foremost organizations of the country, engaged in this business, instead of persisting in a long course of tedious and necessarily expensive litigation, the ultimate outcome of which can hardly be other than some form of co-operation or consolidation, have agreed to bury the hatchet in the beginning, and hereafter to devote their attention to supply the immediate and pressing demand for universal domestic lighting by electricity, and to make money for their stockholders. The latter result will undoubtedly be regarded as a most refreshing novelty in the incandescent lighting business; but there appears no reason, under the new dispensation, why it should not speedily be brought about.

Digitized by Google

ARTICLES.

DYNAMIC ELECTRICITY.

BY CARL HERING.

(Continued from page 354.)

CHAPTER VIII.—FIELD MAGNET COILS.—(CONCLUDED.)

SHUNT MACHINES.

A SHUNT machine may, as far as the calculation of the winding of the coils is concerned, be considered as a separately excited machine whose exciter has a fixed potential, and the current from which may be made as great as is required for the coils. Most of what was said above, regarding separately excited machines in general, and this class in particular, applies, therefore, also to shunt machines.

In making the test for ampere-turns, with temporary coils, the magnets should be excited until the armature generates the required potential when the current is equal to that which is required in the external circuit and, in addition, that which is to be used in the coils. What was said regarding the potential absorbed in the coils of a series machine applies, therefore, equally well to the current required in the coils of a shunt machine.

The number of turns on the magnets is not always definite as in a series machine, but like the diameter of the wire, is generally limited to a certain range of values, from which that which best meets the conditions for cheapness or for efficiency, may be chosen, as described before. There is a definite limit to decreasing the size of the wire and therefore to increasing the number of turns, for it is evident that when the wire is smaller than a certain fixed size, which can readily be determined for each case, the total resistance will be so high that the coils will not take the current required to generate the necessary ampere-turns. It is necessary, therefore, in shunt machines, to use a comparatively large factor of safety in order to guard carefully against passing this minimum value for the diameter or maximum value for the number of turns. The only way to correct such an error in the finished machine is to increase the speed. The maximum limit to the diameter of the wire is not so sharply defined, being dependent on the heating of the coils. Should the coils be required to generate a comparatively large number of ampere-turns in a small coil space, it may always be accomplished at the expense of the efficiency, by increasing the diameter of the wire, thereby increasing the current and diminishing the number of turns, provided only that the heating limit is not exceeded.

The factor of safety used in calculating the diameter from the formula is, as in series machines, dependent on a number of factors. In ordinary cases 20 to 25% will probably be sufficient, depending on the number of errors which must be allowed for.

Should any slight differences be found to exist between the actual and the desired output of the finished machine, they may be corrected by a slight alteration in the speed. An increase of the speed will evidently increase the induction in the armature, that is, the potential at the brushes and at the magnet coils; this will increase the current in these coils, and, therefore, the magnetism, which will again increase the potential. A slight increase in speed will therefore increase the potential in a much greater proportion. For small differences it may be assumed to vary approximately as the square of the speed. To make this correction, run the finished machine until it has attained its highest temperature, and adjust the external resistance until the current has the proper strength, independently of the potential. Measure its speed, S, and the potential V at the binding posts when thus running, then if the required potential is V^1 the speed at which it should be run to correct for this potential is

$$S\sqrt{\frac{V^1}{V}}.$$

COMPOUND MACHINES.

As the magnets for compound machines generally consist of both shunt and series coils, their winding is governed by the same general principles as those given above. There remains only to determine how much of the required magnetism is to be generated by shunt coils and how much by series coils, which can readily be determined from the functions of these coils. For instance, in a simple shunt machine the difference of potential at the terminals will fall with an increase of the current, because there will be more of the potential absorbed in the machine itself in sending the inoreased current through the armature, thus making the useful or available difference of potential so much less. This will in turn diminish the current in the shunt coils, which will, by decreasing the magnetism, diminish the potential still more. If, therefore, constant potential is desired in a simple shunt machine, it will be necessary to make the armature resistance exceedingly small in order that the potential which is absorbed in it will be inappreciably small as compared with the total electromotive force of the machine. Although this can be done it is probable that the shunt machine will thereby become very large and heavy as compared to the output. If, however, series coils of a certain number of turns be added to the shunt coils, an increased current in the armature by passing through these series coils will increase the magnetism just enough to regenerate the increased potential absorbed in the armature by the greater current, and therefore the available or useful potential will be kept constant. The function of the shunt coils in a compound machine is, therefore, to generate the required potential for a small current, while that of the series coils is to generate the potential absorbed in the machine itself. For an armature with a relatively small resistance there will be required only a few turns in the series coils, while if its resistance is relatively great the number of series turns will have to be proportionally greater.

If the series coils have a relatively high resistance, due either to a comparatively large number of turns or to a limited coil space, the potential absorbed by them will become appreciable and will again cause the potential of the machine to fall with an increase of current. This can readily be corrected by adding a few more turns of the series coils to regenerate this lost potential. When constant potential machines are used for incandescent lights there is a certain amount of potential lost in the leads which increases with the current; the lamps will consequently grow less bright as more of them are turned on. In order to correct this, the writer suggested some years ago, to wind such compound machines, not for a constant potential as was usual, but for a potential which increases with the current, in order that the available potential at the lamps and not at the machine remains constant for all currents. This is done by simply increasing the series windings still more, in order to correct for the loss of potential in the leads in addition to that lost in the series coils and in the armature. Such machines are now largely used in place of the older constant potential machines. The chief advantage obtained, apart from the constant brightness of the lamps, is that the loss in the leads may then be made comparatively great, 15 to 20%, or for great distances even 30%, by which a great saving of copper will be gained, the cost of the additional lost power in the leads being small as compared with the interest on the cost of the copper of the leads if this loss were made small.

Digitized by Google

There are two methods of making the connections of compound machines, shown diagrammatically in figures 32 and 33. In the first of these, known as the ordinary compound machine, the shunt coils marked *Sh* are connected to the brushes, while the whole external current flows through the series coils *Sr*, the binding post of the machine being + and — *P*. In the second method, figure 33, known as the "long shunt" compound machine, the shunt coils are connected to the poles of the machine instead of to the armature brushes, and, therefore, the whole armature current passes through the series coils. The differences in the two methods will become more apparent when considering the calculations of the winding. In large, well proportioned machines with few series windings, the differences are very slight if at all appreciable.

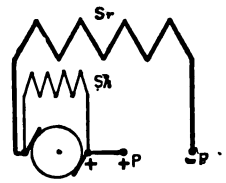

Fig. 32

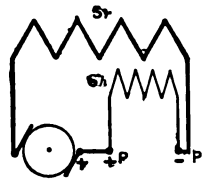

Fig. 33

The test with temporary coils for ascertaining the required ampere-turns should be made in the same way as before, but instead of testing the machine for full load only, the test should be continued for a large number of different loads, say 15 to 20, varying from full load down to open circuit, measuring in each case the ampere-turns which are required to excite the machine to the desired potential at the armature. Before making this test the machine should be examined for magnetic saturation, as will be described in a subsequent chapter, in order to ascertain whether the iron of the frame is properly proportioned for compound machines and to find what the maximum limit to the ampere-turns is. It is very necessary in compound machines not to have them oversaturated and to have the useful magnetism increase as nearly proportional to the magnetizing current as possible, which is most nearly accomplished by having much iron of good quality, evenly distributed and not too near saturation, otherwise there will be only a rough approximation to self-regulation.

The proper position of the brushes should be ascertained and fixed once for all; it should not be required to be altered for different loads, for it is evident that the machine is not self-regulating if the brushes require to be adjusted for different loads. A well proportioned compound machine should not spark perceptibly for the same position of the brushes, even when the full load is thrown off and on suddenly.

Having made all these tests and adjustments the compounding of the coils may be calculated according to the following method, which will be limited to machines compounded for constant potential at the machine or at the lamps, as these are the only kinds that have been found practicable. On a piece of cross sectional paper lay off along the vertical line, *O Y*, figure 34, on any convenient

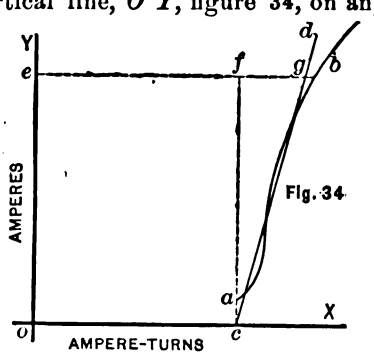

Fig. 34

scale, the currents which the machine generated in the above described test, and along horizontal lines through these points lay off the ampere-turns required in each case to excite the machine for constant potential, and draw a line, *a b*, through the points thus located. This line will, even in the best machines, be somewhat curved, particularly at the ends. The magnetization of the machine should not be continued beyond the point marked *b*, where the line begins to have a decided curvature, as the compounding is possible only for the tolerably straight portion of the curve. Draw a straight line, *c d*, through the most important points of the line, *a b*, that is through such points at which the machine is to be used most frequently; this line will then represent the nearest approach to constant potential for that machine; the greater the variation of the straight from the curved line the greater will be the variation of the potential from a constant. The deviation from this straight line will therefore show at once whether the machine is suitably proportioned for being wound for constant potential.

This line *a b* represents a certain proportion of the series and shunt coils. The horizontal distances between it and the line *O Y* represent ampere-turns required for the respective currents in the external circuit. These distances are made up of a constant portion, *e f*, and a gradually increasing portion, *f g*, which is greater in proportion to the external current. As the shunt coils are to be connected to the poles of the machine or to the armature where the potential is to be constant, the current in them and, therefore, the number of ampere-turns is constant for all loads. The constant portion *e f* or *o c* of the whole number of ampere-turns should therefore be allotted to the shunt coils, and as the ampere-turns of the series coils increases in proportion to the current in the external circuit, that portion of the whole number of ampere-turns which lies between *f c* and *d c* should be generated by the series coils. The shunt coils are therefore calculated as for an ordinary shunt machine requiring the ampere-turns represented by the distance *e f* or *o c*, while the series coils are calculated as for an ordinary series machine requiring the ampere-turns represented by *f g* when the current is that represented by *o e*.

The total energy allotted to the magnets, should be divided between the series and the shunt coils in proportion to the ampere-turns generated by them respectively, at full load, the series coils absorbing potential, and the shunt coils current. In determining the coil space for the shunt coils, care should be taken to correct for that occupied by the series coils which are usually wound first, as the real resistance might otherwise be considerably higher than the calculated, owing to the increased length. In determining the heating limit to the diameter, the total maximum number of watts which may be dissipated in the coils may be calculated from one of the formulæ given above, the cooling surface being that of the outside coil only; this total may then be divided between the coils in proportion to their number of ampere-turns, or in any other proportion provided only that the sum of the watts lost in both does not exceed this total.

The general method just described, applies only to large, well proportioned machines, or to others when only a rough approximation is desired; for smaller machines, or when the machine is to correct for loss of potential in the leads for incandescent lamps, or in cases where accuracy is desired, certain corrections are required in the calculation of the compounding of the coils. These corrections will be different, according to which of the two connections shown in figures 32 and 33 are used; they may be briefly described by the following diagrams, their importance in different cases being rendered apparent by their actual values. Referring first to figure 32, it is evident that if the shunt current is appreciably great, it should be subtracted from the armature current to give the real external and series winding current. In figure 35, therefore, in which *c d* represents the same as *c d* in figure 34, this shunt cur-

Digitized by Google

rent should be laid off at $o\,h$; the external or series winding current should, therefore, be measured from h, instead of from o, and the shunt winding calculated for $h\,i$ ampere-turns instead of $o\,c$. Furthermore, if the potential is constant at + and — P, figure 32, it will have to increase slightly at the terminals of the shunt coil for full load, owing to that consumed in the series coils, which will be appreciably great when the armature resistance is relatively great; the magnetization of the shunt coils will, therefore, increase slightly with an increased load, instead of being constant. This increased potential for the greatest load can readily be calculated by Ohm's law from the resistance and current in the series coils; let this be v, and let V be the potential at the poles + and — P, then that at the shunt coils, for full load will be $V + v$; if $h\,e$ is the maximum external current lay off $e\,k$, so that it bears the same proportion to $h\,i$, as $V + v$ does to V; in other words, make $e\,k = \frac{V+v}{V}\,(h\,i)$, then $e\,k$ will represent the magnetism of the shunt coils at full load, and will be slightly greater than $e\,f$, figure 34. The potential v, lost in the series coils must be generated again by a few additional windings of the series coils; if it takes $e\,d$ ampere-turns to generate V volts, it will require $e\,l$ ampere-turns to generate $V + v$ volts, in which by simple proportion, $e\,l = \frac{V+v}{V}\,(e\,d)$. The line $l\,i$, therefore, represents the correction of the line $d\,i$, and the series coils should be calculated from the ampere-turns represented by $k\,l$, and the external current, $h\,e$, instead of from $f\,g$ and $o\,e$, respectively, in figure 34.

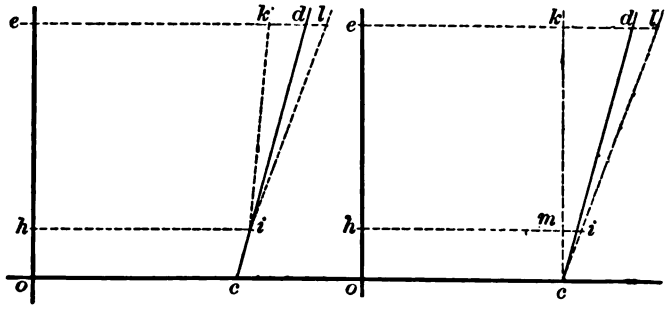

Fig. 35

Fig. 36

If the connections are as in figure 33, these corrections will be slightly different. If the potential is constant at + and — P, the current and magnetization of the shunt coils is constant, and no correction is necessary for them. In figure 36, therefore, lay off as before, $o\,h$, equal to the shunt current, then $h\,m = o\,c$, will be the shunt ampere-turns. To correct the series coils for the potential lost in them, lay off $e\,l$, determined as in figure 35, then $l\,c$, will be the correction of the line, $d\,c$, and the series coils should, as before, be calculated from the ampere-turns, $k\,l$, and the current $e\,h$. In both figures 35 and 36, these corrections are greatly exaggerated for the sake of clearness. As the shunt current in figure 33 must also pass through the series coils, they act to a certain extent as shunt coils also, though they should not be included in the calculation of the latter. In figure 36, $m\,i$ represents the ampere-turns which are generated in these series coils by the shunt coil current.

If the machine is furthermore to correct for the fall of potential in the leads, the simplest way to determine the winding, is to make the test for ampere-turns by passing the main current through a resistance equal to that which the leads are to have, and thence through the lamps or other resistance, and to excite the machine so that the potential at the end of this lead resistance remains the same for different loads. The calculations are then made as before, except that the potential at the shunt coils is not that measured at the ends of these leads, but that at the machine, which is, of course, higher, and may be either measured during the test or calculated from the resistance of the leads and the current. If this test cannot conveniently be made with a resistance equal to that of the leads, the correction of the ampere-turns may be calculated in the same way as described above, for correcting for the loss in the series coils, except that the shunt coils are not determined from the potential at the ends of these leads, but only from that at the machine.

The relative values of the two methods of connecting, shown in figures 32 and 33, may be seen by comparing figures 35 and 36. When the corrections, shown exaggerated here, are small, the two methods are practically the same, which will be the case for large, well proportioned machines. In small machines these corrections become more important, in which case there will probably be a slight advantage in favor of the second, as the shunt coils, which are the more expensive, are somewhat smaller, as seen from the distance $h\,m$, figure 36, compared to $h\,i$, figure 35, besides being subjected to a lower potential; the series coils are consequently somewhat larger, but the whole coils will be less bulky than in the first method.

Figure 34, as well as the corrections shown in 35 and 36, indicate what the most desirable general proportions are for compound machines. The curved line, $a\,b$, should be as straight as possible, which may be accomplished by using a good quality of soft iron in the field, by making the cross-section large enough to be well below the point of saturation, and by distributing it so that all parts are magnetized to about the same degree, instead of having some parts over-saturated while others are far below saturation, as is often the case. Furthermore, the inclination of the line $c\,d$, to the vertical should be as small as possible, as the variations of the potential which the series coils have to correct will then be less. This is accomplished by making the armature resistance as small as practicable. To avoid shifting of the brushes, the number of armature windings, and particularly the number of windings per armature coil, should be as small as possible. In general, all that was said in previous chapters regarding the most desirable proportions of armature and field, applies particularly to compound machines, as it is of the greatest importance to have these well proportioned. The magnets should respond quickly and readily to changes of magnetization, in order that regulation may be easily effected by the ampere-turns, over-saturation or even too close approximation to saturation should, therefore, be carefully guarded against.

From the principles of constant potential compound machines, it is evident that they will be self-regulating only for variations in the current, but not for variations in the speed or in the resistance of the coils due to heating, neither of these can be compensated for by compound winding, and it is, therefore, necessary to maintain both the speed and the heating as nearly constant as possible. Furthermore, it is necessary to run the finished machine at the same speed as that in the test, as the proportions of the series and shunt coils will be quite different for different speeds. The calculations should be made as carefully as possible, as it is not possible to correct any mistake by changing the speed as in simple shunt or series machines. If, however, a final correction is found necessary, the speed may be increased and an adjustable resistance placed in series with the shunt coils, and one as shunt to the series coils; these can be adjusted by trial to compensate for the error, and should then remain unaltered for varying loads; from the functions of the shunt and the series coils, it can readily be seen which of these two should be adjusted.[1]

1. For further information regarding the winding of field magnet coils, the reader is referred to the author's "Practical Directions for Winding Magnets for Dynamos."

(To be continued.)

Digitized by Google

PRACTICAL NOTES CONCERNING THE CONSTRUCTION, USE AND MANAGEMENT OF STORAGE BATTERIES.[1]

BY A. RECKENZAUN.

(Continued from page 304.)

DURABILITY OF STORAGE BATTERIES.

When speaking of the durability of batteries, we have to consider separately the age of positive plates, the age of negative plates and the age of the boxes or receptacles. As regards the latter, we have to take into consideration the kind and quality of the material of which the boxes are made; if these are of toughened glass which is never exposed to extremes of temperature, and if the same are not roughly handled or knocked, then we may assume that such receptacles are everlasting. For stationary purposes glass cells are generally used. In other cases, however, where the batteries have to be moved frequently, or when the same are utilized for locomotive purposes, then glass is not a reliable material and wood or hard rubber is substituted. Wooden boxes are easily attacked and destroyed by the acid, therefore it is customary to line them internally with pure sheet lead carefully burned at the joints. Such boxes are generally made of teak, or other hard wood, which is not liable to warping; when boiled in paraffine wax and pitched inside before the lead lining is fixed, wooden cells will last a long time—several years—if kept dry and clean externally. Sometimes hard rubber or ebonite boxes are used, but these are more expensive and less strong than wooden ones. Boxes have also been made of an alloy of lead of tolerable stiffness, and many other materials have been tried with more or less success. In any case, the durability of such receptacles will be found of minor consequence if compared with the durability of the electrodes. The age of plates is *the* point of vital interest; when we are asked what the life of a storage battery may be, we at once think of the plates and almost ignore everything else; and we feel mostly concerned about the positive plates. We have already explained some of the causes which destroy the positive plates, and we have shown that the *treatment* of secondary batteries has as much to do with their durability as methods of construction or quality of materials. Thick plates, for instance, are found to last longer than thin ones; this is only natural when it is remembered that corrosion takes place upon the metallic support, which wears out in time. This corrosion proceeds mainly from the surface inwards, and the internal parts of a thick plate are protected to a great extent by the mass of superincumbent material. Thick plates offer an advantage if, firstly, the cost of material is much less than the cost of manufacture, and secondly, if weight and space are of little consequence. The cost of material may, however, exceed the cost of labor, and the value of the worn-out material may have a market value not much less than the original metal; under these circumstances it might happen that it is cheaper to renew the plates frequently rather than increase their volume. Weight and space are of the utmost importance in secondary batteries used for electric cars and boats, and in such cases we make the plates as light as compatible with strength of structure, almost irrespective of the cost of labor and the price of lead. Here we have to take into account the energy continually wasted in propelling the battery along with the vehicle it propels, and the point of economy is reached when the depreciation of the battery equals the cost of the motive power which is spent in this auto-propulsion. By decreasing the weight of material we reduce the activity of the plates, or the *rate* at which the current is consumed, and the life of the plates is to a great extent proportional to the amount of work done. In every instance we reach a certain limit which has to be considered with reference to any particular application. If the frequency with which plates have to be renewed is such as to cause little inconvenience, then one stage of the durability difficulty has been overcome. Frequent renewals do not cause a deal of inconvenience when systematically carried out, as would be the case with tramways, but in electric light installations much annoyance is likely to result through such a process, therefore it is advisable on several grounds to produce durable and strong plates for stationary purposes.

From the *Telegraphic Journal and Electrical Review* (London).

DURABILITY *vs.* WASTE OF ENERGY.

Let us make a rough calculation to show the relative losses which occur in the case of tram cars propelled by means of storage batteries, leaving out the question of small volume, which is merely a matter of convenience. We assume that the tractive force on a level tram line is 26 pounds per ton when the car is in motion, and that it takes 100 pounds per ton to set it in motion; furthermore, that there are some easy gradients and curves which demand a tractive force of, say, 60 pounds per ton; we may get an average of about 52 pounds per ton throughout an ordinary track when running at the rate of seven miles an hour. The saving of one ton weight in the shape of secondary batteries would, under the above conditions, represent a saving of $\frac{5280 \times 7 \times 52}{60 \times 33000} = .97$ h. p. applied at the driving wheels. If we allow efficiencies of 80 per cent. in the gearing, 80 per cent. in the motor, 75 per cent. in the accumulator and 90 per cent. in the generating dynamo, then we have a total efficiency of about 33 per cent. between the driving wheels and the steam engine; therefore, in order to produce the above tractive force upon the tram rails we require $\frac{.97}{.33} = 2.94$, or say 3 h. p. from the prime mover.

The value of a horse-power hour varies considerably according to the price of coal, of labor, and especially with the size of the engine; but we may take the cost of a steam horse-power at £12 per annum in large engines, inclusive of all charges, consequently 3 h. p. for, say 15 hours a day, will be worth £36 sterling a year. For this amount of money we can purchase three tons of new lead at the present prices, or we may employ this sum in paying wages for labor. Four pence per plate, for instance, paid for casting, pasting and fixing may be a fair remuneration, and the amount stated above (£36) would at this rate suffice for the conversion of 2,160 old positive plates into new ones. By saving weight we save power, and the point of economy is reached, as we have hinted before, when the energy wasted in propelling the accumulator of a car equals the cost of replacing worn-out plates. We cannot recover the entire quantity of lead originally put into a plate, although the weight of a worn-out plate is practically the same as that of a new one; there is necessarily some loss in the reconversion of peroxide and sulphate into metallic lead which may be valued at between 30 and 40 per cent. in money, inclusive of labor and fuel used in the furnaces.

All the above figures are approximate only; the exact values can only be ascertained when all the factors are known, and among the principal factors are firstly, the size and total weight of a car; secondly, the nature of the road and the speed to be applied; thirdly, the number of cars supplied by one charging station, and lastly, the cost of fuel, labor, and all necessary materials.

(*To be continued.*)

EXPERIMENTAL RESEARCHES ON THE ELECTRO-DEPOSITION OF ALLOYS.[1]

BY ALEXANDER WATT.

Believing that this subject has not been so thoroughly investigated as its importance would merit, I resolved to pursue a series of experiments to determine which metals,

1. From the *Telegraphic Journal and Electrical Review* London).

Digitized by Google

and under what conditions, would deposit, in the form of alloys, upon other metals from various solutions, setting aside all those electrolytes (cyanide solutions) from which brass, german silver and colored golds are deposited in the ordinary operations of the practical plater. I may state that my experiments were conceived more with a view to ascertain facts than to discover new processes which might be applicable to the arts. Although these experiments had no practical significance in their inception, it is possible, however, that some of the results obtained may prove useful, not only to persons engaged in electro-deposition, but also to those occupied in that important branch of the subject now recognized as "electro-metallurgy."

In preparing a series of solutions of mixed metals for electrolytic treatment, I was not unmindful of the law of Berzelius, that "out of a solution of mixed metals, the least electro-positive metal is deposited first," but as I had met with results in practice which tended somewhat to weaken my confidence in the accuracy of this law, I resolved to disregard it for the time and try, by actual experiment, whether it was reliable or otherwise. I was also aware that Prof. Silvanus Thompson had somewhat recently read a paper before the Royal Society on the "Electro-deposition of Alloys, and on the Electromotive forces of metals in cyanide solutions," in which he held, in reference to the electro-deposition of brass, bronze and german silver from cyanide solutions, that this was "apparently departing from the law of Berzelius, that out of a solution of mixed metals, the least electro-positive metal was deposited first." In the same paper Prof. Thompson states "it is well known that the electro-deposition of such alloys as brass, bronze and german silver is not practicable from mixed solutions of the sulphates or chlorides of the constituent metals." Again, Gore says: "With a solution of mixed sulphates of zinc and copper, copper anode and cathode, and a single small battery, copper alone was deposited; zinc was strongly positive to copper in this liquid by the galvanometer, and coated itself immediately with copper in it by simple immersion;" and he further adds—though why he should claim credit for the discovery it is difficult to imagine—"From these and many other experiments which I have made with similar results, we deduce the following rule:—If a liquid contains several metals or electro-positive substances, and a *weak* electric current is passed through it, only that substance which is least electro-positive will be deposited."

Having quoted the above authorities to explain what is recognized as the governing principle in connection with the electro-deposition of alloys, I may now state that, so far as my own experiments have shown, the law of Berzelius is not sustained. Indeed, the results which I have so far obtained, appear to me to render the "departures" from this law rather the rule than the exception. In order to render my experiments as uniform as possible, I employed the same number of battery cells in each case, and as the battery was very constant, and, I should add, very weak, there was practically no difference in the conditions under which each result was obtained. In following up the subject, I determined—1. To ascertain if an alloy could be obtained from acid solutions by means of a direct current. 2. Whether an alloy could be obtained upon a piece of metal by contact with another metal in the same solution. 3. Whether the same solution would yield an alloy *by simple immersion*, Under the two latter conditions of working I may say that I obtained results which, so far as my rather extensive practical experience is concerned, I was quite unprepared for. I may here remark that in the electro-deposition of alloys—brass for example—great care is necessary to prevent one or other of the constituent metals (zinc and copper) from depositing alone. I have known an instance, when working a cyanide brassing bath, in which an iron rod, suspended horizontally in the bath, received a coating of copper at one end, zinc at the opposite end, and brass of various shades of color on the intermediate surface. Again, in the same solution, with a large anode surface immersed, zinc alone would deposit; with very small anode surface, copper alone, and when the electrodes were properly balanced (not necessarily of equal surface, however) the requisite alloy—brass—was deposited of a fine golden color, provided that the cathode remained stationary in the liquid; if, on the contrary, the article was moved briskly about in the bath, copper alone would be deposited. Bearing these facts in mind, great care was taken, in carrying out the experiments under consideration, to secure the best possible conditions of working, by making such modifications as were necessary in each individual case. Moreover, since too strong or too weak a current would have produced the same results as those above indicated, care was observed to avoid error from this source.

Experiment I.—*Citrates of Copper and Zinc.*—A mixed solution of these salts was prepared, the latter salt being in excess. The solution was moderately strong, and was used cold. Five small battery cells (zinc and copper elements) in series were used. This battery, having been in use for several weeks, gave a very feeble current, but amply sufficient for the purpose. With small anode surface copper alone was deposited; with large anode surface zinc alone. When these differences were adjusted, and the suitable anode surface arrived at, the cathode—a plate of steel—received a coating of *brass*. Finding that the deposition of an alloy, *from an acid solution*, presented little or no difficulty, and verified my belief that electro-negative and electro-positive metals would deposit together in the form of an alloy, if the proper conditions of working were established, I resolved to pursue the subject on the same lines, through a series of experiments with acid solutions, and with various metals, the results of which I now desire to make known.

By Contact with Another Metal.—A plate of steel, placed in contact with a strip of zinc in the citrate of copper and zinc solution, received a coating of brass of good color on the *contact* side and copper only on the opposite side.

By Simple Immersion.—A clean strip of zinc received a yellow coating of brass immediately, and continued to do so after several immersions.

II. *Acetates of Copper and Zinc.*—A mixed solution of these salts was prepared, with the latter in excess, and worked at various degrees of concentration until the desired object was attained, namely, the deposit of an unmistakable alloy. When the solution was too strong, a powdery deposit of copper alone appeared upon the cathode; gradual dilution, with water, however, soon improved the character of the deposit, and eventually put the liquid in a proper condition to yield a deposit of brass. To obtain a coating of brass of good color from this solution, it was found necessary to immerse what may be considered a remarkably small surface of anode, that is to say, less than one-fourth of an inch of anode surface only was required to secure a coating of alloy upon a cathode surface (a steel plate) equal to at least five square inches. When the anode was allowed merely to touch the surface of the solution the steel plate instantly became coated on both sides, with brass of a good yellow color, except at the extreme end, farthest from the anode, which was tipped with zinc only. To regulate this, and place the anode opposite the entire length of the steel plate, a piece of thin brass wire was employed as an anode, and answered the desired purpose in every respect, for a freshly prepared steel plate, soon after immersion in the bath, became uniformly coated on both surfaces with brass of a very good color. Under these conditions the deposition of a genuine alloy was far more prompt than with an ordinary cyanide brassing solution.

Digitized by Google

By Contact.—A steel plate, in contact with a strip of zinc, immediately received a coating of brass on the contact side, but copper alone was deposited on the opposite side.

By Simple Immersion.—A clean strip of zinc became coated with brass immediately after immersion in the above solution.

III. *Sulphates of Copper and Zinc.*—A solution was made with these salts, the zinc salt being in excess, and, as before, the liquid was tried at various degrees of concentration, water being repeatedly added until the twin metals deposited in the form of an alloy. While adjusting the strength of the solution care was observed to regulate the anode surface until the requisite color of the deposit—yellow brass—was obtained. This point was not reached until the solution, by continued additions of water, had become exceedingly attenuated. In this state, however, a deposit of brass, of good color, was received upon a steel plate, with the weak current from the five cells before referred to.

By Contact.—A steel plate, in contact with a strip of zinc, received a coating of yellow alloy in the above solution.

By Simple Immersion.—A clean strip of sheet zinc became coated with brass in the same solution by keeping the piece of metal gently in motion while in the liquid.

IV. *Chlorides of Copper and Zinc.*—In this case a very weak solution of the mixed metals was required to obtain a deposit of brass. When, however, the proper degree of dilution had been arrived at, an alloy of zinc and copper was received upon a steel plate, exhibiting the characteristic yellow color of brass. The deposits from this solution, however, were not quite so readily obtained as with the former solutions.

By Contact.—Steel in contact with zinc received a coating of brass of an indifferent color.

By Simple Immersion.—A yellow film, but not of good color, was obtained upon a strip of zinc.

V. *Nitrates of Copper and Zinc.*—As in the last instance, an exceedingly weak solution of the mixed metals was necessary, otherwise, a black, powdery deposit only was obtained. Even with a very dilute solution much difficulty was experienced in obtaining even a trace of yellow metal, the deposit being chiefly copper of a palish tint. Patches of a yellow color were, however, visible on parts of the steel cathode, indicating the presence of an alloy.

By Contact.—A plate of steel in contact with zinc became highly iridescent in the above solution, the colored film being very adherent. No alloy obtained by this method.

By Simple Immersion.—A strip of zinc immersed in the above solution received a black deposit only.

In the preceding paper I gave the results of some experiments in which I had successfully deposited alloys from solutions of mixed metals, the salts employed being either neutral or faintly acid, but in no case alkaline. Finding that it was the general belief amongst physicists and others that alloys could not be deposited from what I will term *acid solutions*, in contradistinction to the cyanide baths from which alloys have hitherto been obtained, all my experiments were made with mixtures of metallic salts, more or less neutral, the exact condition apparently being of little consequence, since in some cases liquids which were positively acid gave similar results to those in a more neutral condition.

In depositing alloys (brass, for example), from cyanide solutions, it has always been found necessary to employ a current of high E. M. F. to throw down the zinc in due proportion with the copper to form brass of good color, and where batteries were employed for this purpose, Bunsen's zinc-carbon battery has always been applied by preference. Now it is a somewhat remarkable fact in connection with the experiments which I am now pursuing, that although I preferred to employ my little battery of five cells arranged in series, I successfully obtained deposits of brass when the cells were arranged in multiple arc, apparently showing that a high E. M. F. is by no means necessary to cause the electro-negative and electro-positive metals to deposit simultaneously from acid solutions. In further proof of this I have but to call attention to the fact that the alloys were also obtained without the aid of a direct current at all, that is to say, by the simple contact of a strip of zinc and a strip of steel in either of the mixed metallic solutions, and even by the simple immersion of a strip of zinc, *per se*, in the solution. The late Alfred Smee, in his admirable work, "Elements of Electro-Metallurgy," in reference to the possibility of depositing alloys electrolytically, says: "We have now to discuss the important question whether two or more metals can be reduced at the same time, and whether the metals can be thrown down conjointly with other bodies. This, considering the amazing number of solutions, is a very complex question, and only a general outline of the principles regulating these phenomena can in the present state of our knowledge [1851] be attempted. In entering upon this subject I began by selecting metals far apart in the facility of their reduction by hydrogen; the solutions of the salts of zinc and copper being mixed, only copper was reduced at the negative pole. Without detailing a mass of similar experiments, I shall at once state, as a fundamental principle, an absolute law, derived from a most extensive examination of the voltaic force, that the *voltaic circuit is invariably completed in that mode which offers least resistance to the passage of the force.* That is to say, that if a great variety of roads are offered by which that object may be effected, that the *force*, provided the road be large enough, would pass exclusively through the one offering the least resistance. * * * As a general principle, to obtain a deposit of two or more bodies on any negative pole, we must use a quantity of the voltaic force, more than sufficient to reduce the elementary substance from the compound most readily decomposed. By the first law regulating the quality of metal reduced by the voltaic current, the metal is always reduced as a sponge when hydrogen is evolved from the negative plate; therefore it would be impossible to obtain a reguline alloy in a solution of any two metals, one of which is above, the other below the evolution of hydrogen, from the particular negative pole we employ in these solutions. * * * Such is a rough sketch of the principles to be pursued for the reduction of alloys, but at present, practically, I have not reduced a perfect reguline alloy of any metal, though I feel no doubt, by following out the above principles, a person might succeed in attaining his object with some metals by a careful examination of the various salts."

The above words were written by the gifted author at a time when electro-deposition was in its infancy, and no one, up to that period, had done so much as he to popularize the art and render its pursuit comparatively easy to the non-scientific student. The results of my recent experiments, however, appear somewhat antagonistic to the principles above enunciated, concerning the deposition of alloys, for I not only obtained deposits of brass upon steel, which was perfectly reguline, adherent, and readily burnished without stripping, while hydrogen was evolved from the cathode, but also deposits of brass on steel by simple contact of a piece of zinc in many mixed metallic solutions, and also by simple immersion. It is possible that if I had read the foregoing passages in Smee's work before commencing my experiments, I might have been disposed to pursue his line of reasoning, and have endeavored to follow his precepts—in which case it is doubtful whether I should have succeeded so readily as I did in my first trial, which was really prompted, as before stated, by some observations in Prof. Silvanus Thompson's paper on this subject, recalling to my mind certain facts which I had noticed when experimenting upon the electro-deposition of alloys some years ago.

VI. *Acetates of Copper and Zinc.*—In this experi-

Digitized by Google

ment it was determined to ascertain whether an *acid brassing solution* could be obtained by the *battery process* as it is termed, and if so, whether the cathode would receive a reguline deposit of brass, as in the former cases. For this purpose about equal parts of commercial acetic acid and water were taken as the solvent solution. A strip of sheet brass was employed as an anode, and a rod of carbon for a cathode. The current was then allowed to pass, when, soon after, the liquid acquired a greenish tint near the anode; the solution was frequently stirred while the electrolysis was proceeding, and at the end of about twenty minutes the carbon cathode was replaced by a steel plate, which became partially coated with a yellow film in less than half a minute. The steel plate was now withdrawn, and the carbon cathode again immersed to allow the solution to acquire a sufficient quantity of the mixed metals to form a practical working bath. In about three-quarters of an hour from the commencement of the operation, the bath was found to have become sufficiently charged with zinc and copper to yield a ready deposit of good color, for on again immersing a prepared steel plate it became instantly coated with a film of brass of a good yellow color. After a few minutes' immersion the plate was withdrawn and well scoured with silver sand, soap and water. Finding that the coated metal withstood this treatment without stripping, it was next scoured with the sand and water only, with as much force as possible, to ascertain to what extent the deposit was adherent, and it is not saying too much to state that it required the most severe friction of moist sand, applied without soap, to remove the film, which became dislodged in this brutal fashion after a minute or two, and in a remarkably uniform manner, showing that the alloyed metals had adhered with unusual tenacity. I may here state that so far as I remember I never met with a brass deposit upon any metal so thoroughly adherent. The plate was afterwards reimmersed in the acetate bath, and allowed to receive a fairly good coating. When this had been attained, the plate was withdrawn and scoured with sand and soap as before, and after well rinsing a steel burnisher was applied, when it was noticed that the deposit felt exceedingly soft under the pressure of the tool, and had not the slightest disposition to blister, or in any way separate from the steel surface beneath. The coating of brass was, therefore, reguline in the highest degree. After coating several other pieces of metal in the same solution, by means of the direct current, the contact method was applied with the result given below.

By Contact.—A strip of steel, in contact with a strip of zinc of the same superficial surface, was immersed in the above bath, and it promptly received a coating of brass on the contact side. The reverse side, with the exception of the edges, was coated with copper only.

By Simple Immersion.—A strip of zinc became coated with a yellow film immediately after immersion; this was promoted by gently moving the piece of metal about while in the liquid.

VII.—The previous results having been obtained with five small cells arranged in series, it was determined to ascertain whether similar results could be obtained with a current of lower tension; with this view the same number of cells were arranged in multiple arc, and some of the experiments with the same solutions repeated. In this case there was a decided tendency for the copper alone to deposit, but when a larger anode surface was exposed, both metals deposited in the form of a yellow alloy.

VIII. *Sulphates of Nickel and Copper.*—I may here remark that in all my first experiments I determined to ascertain which of the metals would alloy with *copper* by electrolysis—the red color of this metal rendering it specially advantageous for the purpose. In the present experiment solutions of the respective salts were first prepared; a small quantity of the copper solution was then poured into the depositing vessel, and to this was added a somewhat larger proportion of the nickel solution. A piece of sheet copper was used as an anode, and a steel plate for the cathode. On immersing the latter a deposit of copper only was obtained. A further addition of the nickel solution was then made, and a fresh cathode immersed, with the same result, namely, copper alone appeared on its surface. A much larger addition of the nickel salt was then given, when, instead of copper alone, a darkish wavy film was obtained, which, when wiped with the finger, exhibited a film approaching the color of german silver. A still further but moderate addition of the nickel solution was then given, and the next plate, as before, received a wavy dark colored film, but it was found that when this was scoured with sand and soap, the coating exhibited positive evidence of an alloy of nickel and copper—not of so good a color as ordinary german silver however (which contains zinc also), but still an unmistakable alloy.

By Contact.—A strip of steel, in contact with a strip of zinc, was immersed in the above mixed solution, and received a coating of alloy of the same tint of color as that obtained with the battery current.

By Simple Immersion.—A film of the same character was obtained upon a strip of zinc, by briskly moving it about while in the liquid.

IX. *Tartrates of Copper and Zinc.*—A weak solution of the mixed salts was found necessary to obtain a yellow deposit from this combination. With five cells arranged in series as before, a coating of brass was deposited upon a plate of steel very readily. The deposit was of good color.

By Contact.—A steel plate, in contact with a strip of zinc, received a yellow coating of brass on the contact side in the above compound solution, copper alone on the reverse side.

By Simple Immersion.—A yellow film, but not of good color was obtained on a strip of zinc.

X. *Chlorides of Copper and Tin.*—A weak solution of the mixed salts was employed, because it was found that with stronger solutions a black powdery deposit only could be obtained upon the negative plate. When the liquid had been reduced, by gradual additions of water to a fair depositing condition, there was a slight tendency for the two metals, tin and copper, to go down together, when a large anode surface was immersed. No results of a really satisfactory character, however, were obtained with these mixed salts, either by direct current or by the contact method, while by simple immersion only a dirty yellowish film was obtained upon a strip of clean zinc.

(*To be continued.*)

RECKENZAUN'S SECONDARY BATTERY.[1]

In the *Review* for April 22d, we briefly described a form of secondary battery devised and patented by Dr. Frankland, F. R. S., and it will not escape notice that the invention of Mr. Reckenzaun is to all intents and purposes identical with the foregoing, the latter patentee, however, having the good fortune to antedate Dr. Frankland by a very short period of time only. Before entering into the details of Mr. Reckenzaun's battery it may not be amiss to dilate, although somewhat briefly, upon storage cells generally.

Among the numerous systems of secondary batteries those of the Electrical Power Storage Co., have been regarded as the most successful in the commercial sense, as well as in their constructive arrangements.

This company owns the patents of Faure, Sellon, Volckmar, Swan, and others, the first being acquired for the purpose of obtaining the use of his invention for the application of red lead or other oxides, which he pasted upon or into metallic lead supports. All the other patents held by the company control the use of perforated, indented, cor-

1. From the *Electrical Review*, London Sept. 2, 1887.

Digitized by Google

rugated, or reticulated metal supports or plates, the hollow parts of which are filled with the paste devised by M. Faure.

The Electrical Power Storage Co. and their host of imitators, amongst whom may be reckoned Julien, Epstein, Farbaky, and others, make or cast grids with square holes, somewhat conical internally, for the better retention of the oxide which is subsequently pasted into them. It is well-known that this paste expands, when converted into peroxide, through the electrolytic action in the cells when charging. This expansion takes place in each square, and consequently all over the plate, but, unfortunately, as the natural result of the varying mechanical resistance offered by the support, not *evenly*. Thus the paste in the centre of a square plate will have a considerable resistance to overcome by virtue of all the surrounding substance, whereas those parts nearer the edges encounter less opposition and expand more freely; hence the plate must become distorted, a state generally termed "buckling." Two neighboring plates, if they do not buckle in the same direction will thus come into actual contact, and in the endeavor to avoid this the manufacturers place india-rubber plugs into the plates at short distances apart, so as to render the free unsupported surfaces as small as possible. These precautions, however, do not remove the *tendency* to unequal expansion; they merely offer a rude remedy which cannot remove the *cause*. Moreover, it occurs very frequently that the lead frames burst after prolonged use, this being another result of unequal expansion.

But a worse evil than this is found in the fact that the paste detaches itself from the conical support and drops out in halves or in smaller fractions.

This invariably occurs after a time even in the stationary cells, and such a fault renders perforated plates practically useless for purposes of locomotion. When shaken in a tram-car, for instance, the detachment of the paste is promoted to a large extent, so that the plates become unserviceable in the course of a few months, or even weeks.

The life or depreciation of secondary batteries of the systems indicated depends, first, upon the time necessary to cause the bursting of the grids through buckling, or the tendency to buckle, and, secondly, upon the period of retention of the paste in the holes. Under the best conditions, we do not think we shall be in error if we say that the life of such plates does not usually exceed two years if worked to their full capacity, and this means an expense which but few electric light installations can bear, and, so far as tram-cars worked by accumulators of this description are concerned, there is little hope for success from a commercial point of view.

It may be mentioned that the india-rubber plugs form a very expensive item in the cost of secondary battery manufacture, both on account of the price of the material and the labor involved in fitting the plugs into the plates. Furthermore, the use of red lead as generally adopted renders the "forming" process at once troublesome, complicated and costly.

We will now proceed to describe the improvements effected by Mr. Reckenzaun with the view of overcoming the disadvantages which we have enumerated, the sketch shown being taken from an actual plate in our possession. The inventor prepares small cylinders of spongy or finely divided lead or other suitable porous material, and places them at short distances from each other and in regular lines upon the lower half of an indented metal die. The two halves being fitted together, molten metal, preferably lead or a suitable alloy thereof, is poured in, thus forming a resultant conglomerate plate of great strength structurally, and from which the paste cannot by any chance become disengaged. The advantages claimed for this method of construction over other types of cells are as follows:—

1. Freedom from buckling, since any possible expansion can only take place in the direction of length.

2. No possibility of the active material becoming detached.

3. No india-rubber plugs or other costly separators; sticks or rings of any insulating substance suffice to keep the plates the requisite distance apart.

4. No double process of formation is required, the positive plates being exactly similar and of the same material as the negatives. When the plates are connected up the cells are ready for immediate use.

5. No pasting in the ordinary sense is necessary; the porous cylinders are made by machinery and are consequently cheap.

6. The durability and certainty of action is vastly increased.

7. Whilst the cost of manufacture is considerably less, the depreciation is correspondingly smaller.

8. Large working capacity with small amount of material and little space—a 200 ampere hour cell measures 7½ inches × 7 inches × 10 inches high.

9. Can be discharged at any rate without materially affecting the plates.

The following comparison showing the saving of material and labor, taking the E. P. S. cells as a basis, is given as an example:—The doing away with india-rubber plugs, and substituting sticks or rings, will give a saving of six per cent. in the prime cost. The plates of the E. P. S. Co. have to be "formed" separately in forming boxes. The negatives are placed with "blind" positives and soldered up; these negatives are then subjected to the "reducing" process for a period of about three to four days. The positives again are packed into similar forming boxes with "formed" or "partially formed" negatives and then sol-

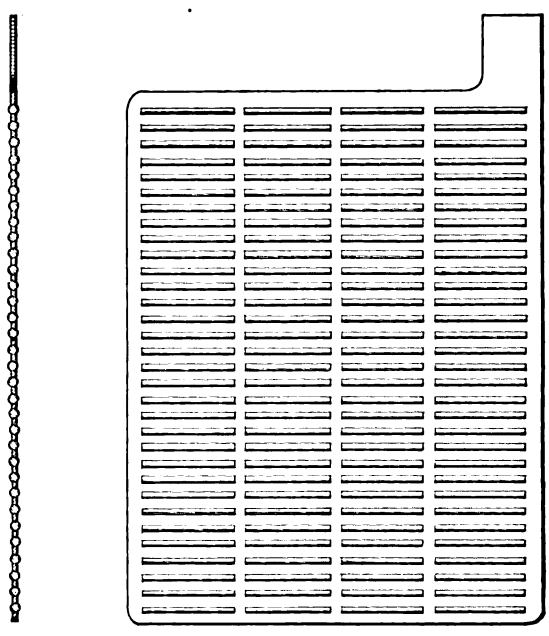

FIGURE 1.

dered up; the red lead paste is converted into peroxide and this process lasts two days. The connections of the positives and negatives have to be unsoldered again, the plates must be unpacked, and this with the double method of "forming" causes much expenditure of time, labor and material. The value of this labor is estimated at 10 per cent. on the prime cost of the battery. We regret that owing to Mr. Reckenzaun's presence in America we cannot offer our readers any data compiled from actual tests of the cells, but from casual figures obtained with a battery which has been in operation for a period of something like 18 months, and from personal inspection at intervals, we have every reason to believe that a distinct and important advance in secondary battery construction is here shown.

It is most essential that a cheap, reliable, and durable

Digitized by Google

accumulator should be forthcoming for the purposes of electric locomotion, and this we think Mr. Reckenzaun has produced.

It stands to reason that if the electrical propulsion of tram-cars is to become more general, and who can doubt that this will eventually be the case, there must be a point where the conductor system, be it overhead or in conduits, is no longer admissible, and here it is that the accumulator *must* step in.

To make our meaning still plainer the loss on a conductor increases with the length of the line, whereas the loss in the transformation of electrical energy from dynamo to battery and from battery to motor remains a constant, no matter how long the tramway. It would be very interesting if some of our electrical engineers would enter into this question, and show for what distances properly proportioned conductor systems are less costly than the self-contained car with secondary batteries, and at what point the latter bears off the palm.

THE WATERHOUSE STANDARD AMMETER.

In response to the demand created by the electric light and power industries for convenient means of measuring heavy currents, a very considerable number of ammeters have been devised and produced, of varying degrees of usefulness and reliability. In most of them permanent magnets or metal springs have been employed as a directive force against the action of the current to be measured. As neither of these forces is absolutely constant an accurate permanent calibration is unattainable with their use.

In the Waterhouse ammeter both permanent magnets and springs are discarded, the indicator being maintained at o by gravity, and actuated in its movement by the repulsive force of like poles of electro magnets.

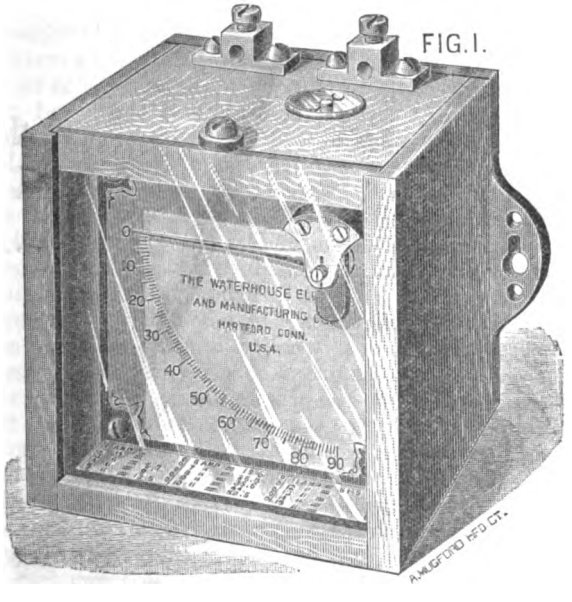

Figure 1, shows the ammeter complete.

On the top are the binding posts for circuit wires, and also a small compass for denoting the direction of the current. The front presents a dial with silver indicator, and on the base is a table on which the calibration of the instrument is recorded. These are enclosed by a glass that is secured in position by a screw and washer on top.

The principle involved is shown in figure 2 and figure 3.

Figure 2, shows a coiled conductor wound around a stationary soft iron core, M, this core having a longitudinal slot, situated to one side of the median line of the upper edge of the periphery of the core. In this slot is placed a soft iron armature, A, which is provided with iron pendant pole pieces and a silver pointer. The armature A and its pole pieces and pointer are finely pivoted at each end and free to swing or vibrate, while the core M is stationary.

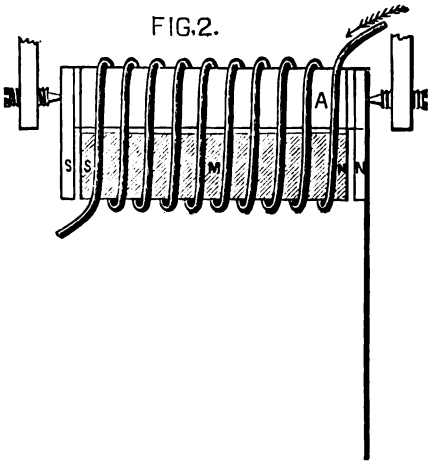

The current in the coiled conductor polarizes M and A alike, so that the poles attached to A are of the same sign as the same ends of M. The repulsion of like poles causes the pendant parts of A to swing away from the centre of the core M, as shown in figure 3, carrying the pointer as shown in dotted lines to an angle corresponding to the

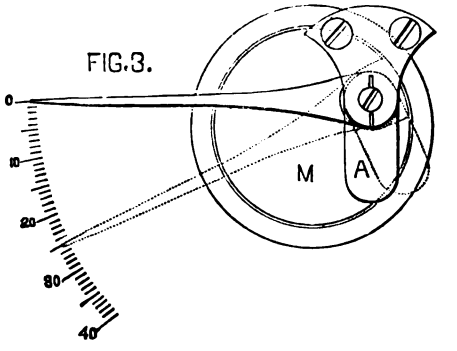

strength of the current passing through the coil. When the current is cut off gravitation carries the pointer back to o.

The Waterhouse Electric and Manufacturing Co. make voltmeters also on the same principle.

ON ELECTRIC STREET CARS, WITH SPECIAL REFERENCE TO METHODS OF GEARING.[1]

BY A. RECKENZAUN, C. E.

Scarcely nine months have passed since your esteemed president, Mr. T. C. Martin, presented a paper on "Electric Street Cars" to the American Institute of Electrical Engineers. I have read this excellent paper with interest, and I have learned a great deal from it, as also from the discussion which followed. Mr. Martin compiled some very important statistics regarding the number of horse cars in actual use in the United States, and he computed them to number 25,000, for the propulsion of which no less than 120,000 horses are requisite.

1. Read before the American Institute of Electrical Engineers, New York, Sept. 20, 1887.

Digitized by Google

These figures filled me with wonderment and surprise, and when I read further on, that over 20,000 of these noble animals are rendered useless every year with overwork in street railway service, I felt it to be the duty of every engineer, electrical or mechanical, to assist with every means in his power in the emancipation of the horse from such cruel service. The percentage of loss given in the paper referred to agrees closely with our European experience. We know that the natural life of a street car horse is reduced to about four years, although it never works more than four hours a day. It seems barbarous, therefore, to employ animals for such purposes; yet, until recently no economical substitute could be found. Steam, compressed air, gas and spring motors have been tried and found inefficient. Improvements may be made in one or more of these, but at the present moment the field of enterprise is entirely open to the cable and to electricity. There are over 80 miles of cable roads in operation in the United States, more than half of which have been laid down within the last five years, and there are indications that further and rapid progress will be made with this mode of traction, particularly in hilly districts, where it is impossible to apply self-propelled cars, owing to the want of cohesion between the wheels and rails when the angle of repose is approached.

On ordinary streets with gradients of not more than five per cent., electric traction will doubtless be more economical and far more convenient than cables, for well-known reasons. Not only is the first cost of construction far cheaper than the cable and its conduit, but the efficiency of the electric system is much greater.

It is admitted that on cable tramways some 70 or 80 per cent. of the total available power is consumed in dragging the cable itself leaving a maximum of 30 per cent. for moving the cars, whereas with electric transmission over 50 per cent. can be utilized, as will be seen by the following figures, which I have obtained from experiments on the electrical railway at Frankfort, in Germany. This line is worked by the overhead conductor system. Its total length is four and one-tenth miles, double track and grooved rails. The entire circuit of the conductor is eight and one-fourth miles long, and its electrical resistance was calculated to be 1.6 ohms.

EFFICIENCY AND WORKING COSTS.

During the experiments referred to, two cars were propelled at a speed of seven and a half miles an hour; one of these cars had an electric motor, and the other was an ordinary car attached to the first, and the entire weight was ascertained to be 8.35 tons, including passengers. Electrical measurements were taken from the dynamo at the power station simultaneously with those on the car. The rails were in their usual dirty condition. When running on the level road the energy used on the cars was 3.87 horse-power, and on the generating dynamo 6.47, giving an efficiency of 59.82 per cent.; when traveling up a grade of 1 in 45, the motor gave eight horse-power and the dynamo 13.5, which again corresponds to 59 per cent. of the available electric energy. These measurements do not include the losses in the dynamo and motor, but it must be remembered that only two cars were on the road, whilst the capacity of the plant at the central station was sufficient for 14 cars. With 12 cars running under the ordinary circumstances of traffic, the steam engines were indicated, and this showed a maximum of 164 horse-power, consuming two and three-fourth tons of coal per day of 15 hours, or two and one-half pounds per indicated horse-power per hour. Reduced to car miles, the weight of coal came to 7.5 pounds, which, at three dollars a ton, would cost one cent per mile run.

The Frankfort electric railway has carried over 3,000,000 passengers since its opening in April, 1884. The working expenses in the year 1886 amounted to $24,904, including the following items:

Salaries of directors, superintendent, engineers, electricians, conductors, drivers, firemen and laborers	$13,615
Repairs of roadway, rails, cars, machinery, and buildings	5,088
Fuel (coals and kindling wood)	3,955
Oil and waste	831
Lighting and heating of buildings, lighting of cars and streets	1,415
	$24,904

The rolling stock consisted of 14 cars, all of which were used on Sundays and holidays, but only eight cars were usually running on week days. If we take an average of 10 cars, then the entire expenses would amount to $6.82 per car per day, but not more than one-third of this, or $2.27, can be reckoned for the item of traction, which should only include wages of engineers, electricians, firemen, cost of coals, oil, and repairs to machinery.

There are about a dozen electric railways in successful operation in Europe, some more extensive than the one I have just described, some smaller; but this one in Frankfort is worked at a greater expense than any of the others I know of; it has been in continuous use for nearly three and a half years, and I thought that by giving you detailed and exact figures of *one* line, I would serve your purpose better than by attempting to crowd a few generalities of all our electric tramways into the small compass of a short paper. You can take this as a safe standard of comparison with other systems of street car traction.

It will be observed, with justice, that the dynamos and motors of the Frankfort line, which was projected more than four years ago, do not yield as high an efficiency as more recent machines. This would leave us another margin. It is well to have a margin in all our estimates, for there is nothing that retards the progress of a novel enterprise more than exaggeration of facts, or statements which cannot be fully borne out in practice.

Some people are apt to base their calculations and estimates upon theoretical conditions. We should never assume perfection in the case of street railway tracks, but on the contrary we ought to adapt ourselves to the roughest of the rough in order to succeed.

TRACTIVE FORCE AND MECHANICAL RESISTANCES.

We know from experience that street rails which are exposed to dirt, grit, stones and the like, offer a resistance of at least 20 pounds per ton with the wheels in motion. Taking the loaded car at six tons, and the speed at six miles an hour, we have to exert 1.92 horse-power at the driving wheels, neglecting friction of gearing and losses in the electric motors. On narrow grooved rails, as used in England, we allow a tractive force of from 25 to 30 pounds per ton. These high resistances are readily accounted for when it is considered that the flanges of wheels frequently take a bearing on the dirt in the grooves; at the same time the wheel tires may roll on the surface of the rails, when a regular grinding action is produced. Furthermore, it occurs frequently that one wheel is running on its proper bearing surface, whilst the other, belonging to the same axle, has its flange touching the bottom of the groove, when by virtue of different circumferential velocities, additional friction is introduced. Sometimes the rails are a little out of gauge. All these points increase the tractive force requisite with grooved rails. Here in America you have few if any such rails, consequently the facilities are superior; but your rails are not so strong as those used in England and on the continent of Europe, and the foundations are less substantial. The joints are also somewhat irregular, and these faults render the motion of a car very unsteady. A ride on some of the roads in Philadelphia reminds one of a voyage on the ocean when the sea is a little rough. Then you crowd very often 70 passengers into a car which is supposed to hold about 30. All these circumstances compel us to provide plenty of power in order that every obstacle can be overcome.

Digitized by Google

The force necessary for starting a car is of course much greater than the force required for maintaining a uniform speed, and experiments show that this initial effort amounts to three times and even four times the tractive force of the car in motion. In dry weather, on curves of 50 feet radius, the resistance to traction is doubled, and on those of 35 feet radius trebled; but when the rails are wet this resistance, due to curvature, is considerably reduced. With a short wheel base, or, better still, with small trucks or radiating axles, the motion on curved rails is very much easier.

GRADIENTS.

The effect of gradients is a matter of simple calculation, and it must be provided for in designing and constructing a motor. We have calculated above, that the minimum effective power for a six ton car running at six miles an hour on the level is nearly two horse-power, exclusive of gear friction or any other waste. If we have to overcome a gradient of one per cent., for instance, the resistance due to gravity will be 22.4 pounds for each ton, or 134.4 pounds for the loaded car. Therefore, we shall require about 4 horse-power to pull this car up a grade of 1 in 100. With a 2 per cent grade we must have about three times the power used on level roads, and roughly speaking each per cent. of grade involves as much energy as the propulsion of a given weight over a horizontal road, if the speed is to be kept constant. On steep grades, however, it is customary to run a little slower, whereby some of the energy is saved, but for a car of the above weight, if it has to overcome grades of 4 per cent., it will not be safe to have less than eight horse-power available upon the driving axles. In addition to this the motor has to supply the power which is unavoidably wasted in the gearing used for transmitting motion from the armature shaft to the car axle. An ordinary street car wheel of 30 inch diameter has to revolve at least 77 times in the minute, in order to traverse a distance of seven miles an hour. Up to the present time no one has succeeded in constructing an electric motor of reasonable dimensions, weight and efficiency to work at such a low speed. Most of the existing motors revolve at from six to twelve times the above velocity ratio, therefore it became necessary to introduce speed-reducing appliances between the motor and the driving axles.

GEARING.

The problem of devising suitable gearing for street cars carrying their own motor has been and is still one of the greatest importance, and I propose now to offer a few remarks with reference to this subject, by citing some examples which came under my own observations. The conditions to be satisfied are by no means simple, and it is somewhat difficult to arrange them in their order of merit. Most engineers endeavor to retain the recognized dimensions of street cars, because great deviations therefrom involve many inconveniences, and it is wise to adhere as much as possible to the rules which have been established by custom, convenience and general utility. The fact that most of the street cars in all parts of the world are similar in shape, indicates forcibly that a particular pattern satisfies the demand. When taking that popular pattern of car and adapting it to our electrical and mechanical apparatus, we find that the space at our disposal underneath the floor and between the axles is meager and extremely limited. Within this small compass we have to fix the gearing which has to give the highest possible return of a given power; it has to be strong, durable, yet light in weight; noise and vibration have to be carefully avoided; the mechanism must be simple, certain in its action, protected from wet and dirt, and, finally, of reasonable cost. How to combine all these virtues has been the study of every engineer who has made electrical traction his serious study.

STEEL SPIRAL CORDS.

In regard to my own observations, one of the prettiest kinds of gearing in actual use is that on one of the cars of the Berlin Lichterfeld electric tramway which was constructed six and a half years ago by Messrs. Siemens and Halske. This car has a capacity for 24 passengers; it weighs when empty 3.2 tons, and makes a speed of 12 miles an hour. The electric motor is fastened under the floor in the centre of the car, having its shaft parallel to the axles. On the motor shaft is a small cast-iron pulley, which has 27 V-grooves on its rim, and within these grooves work an equal number of spiral wire cords, which transmit the motion to both axles of the four-wheeled car. The axles carry the large pulleys, one of which has 13 V-grooves on its circumference, and the other 14 grooves corresponding with those on the pulley on the motor shaft. The wheel base is five feet nine inches, consequently there is only a distance of two feet ten and a half inches between the centres of the connected pulleys.

The cords are made of a pair of steel wires wound closely upon a mandrel of about one-eighth of an inch in diameter, and when this mandrel is withdrawn there remains a stiff, yet flexible spiral, whose external diameter is scarcely $\frac{7}{64}$ of an inch. When cut to the proper length these cords are stretched over the grooves and connected at the ends by means of steel eyes and a steel link. Experiments made with this gear showed that eight spiral cords suffice for transmitting the power to the axles when the car was full of passengers, and as there are actually 27 cords the margin of safety was deemed more than sufficient. It is a pleasure to ride on this car; there is no noise or vibration, and I was told that the spirals last a long time if carefully adjusted; but this method of transmission is not sufficiently positive to warrant its application on steep grades. On this line there is no grade of over one per cent. rise.

CHAIN GEARING.

The second car on the Lichterfeld tramway, which, by the way, must be regarded as the oldest line in the world as far as continuous successful operation is concerned, has chain gearing. The motor shaft is provided with a small toothed wheel, and one of the axles carries a large wheel with teeth to correspond to the gaps in the pitch chain links. This mode of transmission causes some noise and vibration, and this car runs slower than the other with same amount of energy. This is accounted for by the greater friction on the surface of the teeth, as well as by the bending and unbending of the link joints; there is, besides, a constant probability of the comparatively heavy chain being thrown off tangentially by centrifugal force. But this kind of gearing furnishes an absolute or positive motion, which cannot be relied on by methods depending upon frictional adhesion alone.

Some four years ago I applied two pitch chains, four toothed wheels and countershaft for propelling a heavy storage battery car in London. The chains were of steel and substantially made; the wheels of phosphor-bronze correctly shaped. I found that the chain on the fast-running, first-motion shaft, rattled considerably. This chain stretched a little, when the links began to ride upon the points of the teeth, and eventually broke the teeth of the small wheel on the armature shaft. Previous to that I employed some other gear, which will be mentioned shortly.

Mr. Trail, the manager of the Portrush electric railway in Ireland, has been more fortunate than I with chain gear, but he is not perfectly satisfied, and he is now experimenting with something else. Pitch chains are also used on the Bessbrook-Newry electric railway and on the Ryde Pier cars. Mr. Holroyd Smith adopted this mode of transmission on the first cars at Blackpool, in England, but he

Digitized by Google

has since changed it to worm gearing, with which he is better satisfied.

CONICAL DISCS AND CHAINS.

About five years ago I had the idea that it might be advantageous to vary the speed of a car mechanically without interfering with the motor or even the supply circuit. I took out a patent for this in 1882, and applied it to the propulsion of a large street car. The motor was carried by a frame supported upon the axles by bearings and springs, to counteract the effects of vibration. By this arrangement the whole apparatus was rendered independent of the car body, and it could be easily detached. The speed pulleys consisted of conical discs, which, when placed face to face on a shaft, each pair formed between them a grooved pulley, and by shifting these discs on the shaft towards or from each other, the said groove could be made wider or narrower, as desired. Two pairs of discs on different shafts were connected by means of a chain, the links of which were surrounded by wedge-shaped pieces of leather. The cross-section of this chain band was thus shaped in order to fit into the V-grooves offered by the cones. When the said discs were pressed closely together, then the band assumed a position near the circumference of the discs, but when the latter were separated, then the groove widened, the band changed its position and ran on some portion of the conical surfaces nearer the centre of the pulley. Thus the effective or acting diameter of the first motion pulley was varied at will by pressure, and the cones on the second motion shaft followed suit automatically, because the length of the band was constant, and the second pair of cones was pressed together by a strong spring. This arrangement looked very nice, but its efficiency was low; there was a great waste of power through friction, and we finally abandoned it. It worked silently; it was strong and took up little room. The band slipped often when the car was starting or mounting an incline.

STRAPS AND PULLEYS.

Mr. Volk, of Brighton, England, employs leather link belts with great success, for transmitting the power of the motor to the car axle. This railway has been in operation since August, 1883. Mr. Volk tried first, single leather belts, but they broke every day or two; then he used double belts with little better results, and some three years ago he adopted the leather link belt, which has given entire satisfaction. I have seen one of the latter which has driven a car over 50,000 miles and it was not worn out yet. These belts stretch when first put on, the bearings of the countershaft are therefore made adjustable by means of a slide whereby the slack may readily be taken up. When starting the car the belts slip a little, but this is not considered a disadvantage. There are no curves on the Brighton line, and I often wondered whether this method of gearing would satisfy the terrible pull on the very sharp curves which occur on some street railways.

Mr. Van Depoele has given a high testimony in favor of link belts of a special construction after using them for a considerable time, and running them at a great velocity. Like Mr. Volk, he attaches the motor to the car body in order to give it the benefit of the existing flexibility of the car springs. Mr. Van Depoele's link belts, I understand, are made of steel, with special bearing surfaces; they have been used on a line of his construction at Windsor, in Canada; at Scranton, Pa., he employs spur gearing.

SPUR GEARING.

There exists a variety of opinions on the subject of toothed wheels in connection with electric motors, and each opinion seems based upon actual experience. I have seen spur gearing used on electric cars in Europe and in this country, and I give you freely all I know about it. The first I saw was on the Moedling line, near Vienna in Austria. The noise created there was not very great, but there was occasionally some trouble due to the untimely deterioration of the teeth. This was especially remarked by the manager of the Frankfort electric railway in Germany, which is constructed on precisely the same principles, with the difference that the former runs through a country district where there is much less traffic, and the rails are laid on the tops of transverse sleepers like a steam railroad; there is less dust and mud to contend with. Between Frankfort and Offenbach, on the other hand, the rails are laid through populated streets, whereby all the disadvantages of city traffic are brought into play. The gearing of the cars on this line is very noisy and it wears out quickly. The train of wheels consists of a pinion on the motor shaft having 17 teeth, which gears into a spur wheel of 56 teeth keyed upon a countershaft. On this countershaft is a pinion of 26 teeth and this drives a spur wheel of 52 teeth, fastened to the car axle. The velocity ratio, therefore, is as 1 to 6.6, between the motor spindle and the driven axle. The armature makes about 550 revolutions when the car travels at the rate of seven and a half miles an hour. The pinions are made of hard gun metal, and they wear out in about a month. I have seen a number of rejected pinions the teeth of which were ground into the shape of a fine wedge. The spur wheels are of cast steel, and they last about ten months when in continuous service. I was surprised to see these; and what with the noise, the excessive weight and other drawbacks, it made me more than ever prejudiced against such a mode of mechanical transmission on street cars. My views on this point have, however, been somewhat modified since I have been in this country. I had the privilege of being invited to assist Mr. W. Wharton, Jr., of Philadelphia, in fitting up an electric street car. There we used a set of spur gearing which was supplied by the Sprague company. In this case the motor shaft, which runs at from 500 to 600 revolutions a minute, carries two steel pinions, one at each end of the shaft, and these pinions gear direct into two cast-iron spur wheels upon the driving axle, without any intermediate wheels. The motor is partly suspended on the axle and partly on the body of the car. We have run several hundred miles with this car under all conditions of loads, gradients and weather, on some of the roughest tracks in Philadelphia, but up to this moment not a single hitch has occurred. The gearing is practically noiseless, it is efficient and strong, and I see comparatively little indication of wear. The teeth are beautifully shaped, therefore somewhat expensive, but if they last long enough, and if they do not rattle when partially worn, this expense can be ignored. This car contains, besides its usual weight, about 3,200 pounds of storage batteries; it has to mount grades of 5 per cent., and run on curves of 35 and even 25 feet radius, which means very hard work.

FRICTION GEAR.

There is something quite fascinating in friction gear; it offers the advantages of simplicity, noiselessness, and theoretically a high efficiency; but as regards certainty of action and durability, it occupies a low position in the scale of appliances for the transmission of power. The late Prof. Fleeming Jenkin devised an apparatus a few years ago which he called "nest gearing," and of which great things were expected, and indeed it was regarded as the most perfect frictional gear ever invented.

Prof. Jenkin arranged several rollers within a ring; these rollers were in contact with a central friction wheel which was attached to the motor, and the outer ring was connected to the driven object. It is well known that in a pair of friction wheels when running together, the contact surfaces are exceedingly small, the pressure must be great, and consequently there is a rapid destruction of the said contact surfaces. Now by placing a number of rollers within a ring, not only are the contacts multiplied, but there is a perfectly balanced pressure upon all the working

Digitized by Google

parts. This kind of gearing, made of the best materials and of the finest workmanship, has been applied to the telpher line at Glynde. Its efficiency was tested and found to be somewhere near 95 per cent. In the case of telpher lines the motor and its attachments are well out of reach, suspended on tall posts, therefore dust and dirt can be absolutely excluded. The energy transmitted between the electric motor and the driving wheels averaged only 1.5 horse-power, and yet with all these advantages and the great care exercised in its construction and use, this gearing refused to act after a comparatively short space of time. The experiments were watched with intense interest by all who made mechanical science their profession, and especially by those who were seeking effective means of transmitting motion from electric motors. After a number of exhaustive tests, apparent improvements and modifications, the inventors of this nest gearing pronounced it a failure, and finally resorted to chains and cog-wheels. This fact, established after prolonged and most persistent efforts on the part of a number of the smartest mechanicians, should be a warning to all the advocates of friction gear for street car propulsion.

WORM GEARING.

Dissatisfied with the results of my early experiments I resolved to give worm gearing a trial. I collected all the data I could find in text books and from other people's experience. All the different authorities agreed on one point, and that was the efficiency, or rather the want of efficiency in worm gearing. According to various statements the *loss* with this mode of transmission was put down at from 33 to 75 per cent. This seemed to me a terrible waste of power; I was then, as now, engaged in the problem of utilizing storage batteries for street car propulsion. Storage batteries were at that time in disrepute generally, and as for putting these cumbersome things upon a car, the very idea of it was ridiculed by conservative-minded men. Certain would-be experts published their views on this subject, and they endeavored to prove mathematically that the battery could scarcely hold sufficient energy to propel its own weight, and that more than 50 per cent. of the power given by the charging dynamos was lost in the process of transformation. If they had known at the time that I proposed to introduce another energy consuming apparatus in the form of worm gearing they would have declared me a lunatic. There were, however, quite a number of extenuating circumstances which encouraged me to pursue this question. I knew, from experience, that the storage battery, if properly constructed and used, could return more than 70 per cent. of the energy expended upon it; I knew also that a certain type of cell could propel several times its own weight at a speed greater than that of a horse car.

With regard to worm gearing I found that this method of transmission was used for hoists and for actuating machine tools, and that in some cases it has been working for twenty years without requiring any expensive repairs. During all my researches I failed to discover any reliable data on the construction and use of a worm which had such a steep thread that the worm-wheel could cause it to revolve. I did not come across any publication with figures to show the efficiency of gearing where the worm-shaft revolved at a very high velocity whilst transmitting considerable power. Just at that time the valuable researches of Professors Thurston and Kimball and Mr. Beauchamp Tower, on the subject of friction and lubrication, were published, and these revealed the fact that all the long-established laws on friction were entirely wrong. The experiments of these scientists prove conclusively that the coefficient of friction varied with the velocity, and that it decreased up to certain limits, with an increase of speed between lubricated surfaces.

Furthermore, it has been demonstrated that the coefficient of friction between lubricated bearings is not .1 or .2, as so frequently stated in text books, but .003 and less, and that even with moderately bad lubrication it amounted to only .01. All these, and other considerations encouraged me in the belief that there is a fruitful field for further investigation, and I designed a set of worm gear of the following dimensions: Steel worm, turned and polished, 6 inches in diameter, 6 inches long, treble thread of 2 inches pitch; worm wheel of phosphor bronze, trimmed teeth, $15\frac{9}{32}$ inches diameter, $3\frac{1}{2}$ inch face, 24 teeth. Ratio of gear, 8 to 1. The worm was fitted to the spindle of an electric motor, and the worm wheel attached to the axle of a street car, which was supported on a frame with bearings to keep the wheels off the ground. When running empty, with the worm out of gear, the motor took 6 amperes of current, and when put in gear, but without any other load, 7.75 amperes were used to drive the apparatus at the same speed. Prony brakes were then applied to both the motor shaft and the car axle, and the power was measured on each at a given E. M. F. current and speed. The efficiency of the gearing was calculated by dividing the horse-power given off on the axle by that measured on the worm shaft, and we found that the useful effect increased with the speed, viz.: at 300 revolutions of the worm it gave 80 per cent.; at 520 revolutions, 81.1 per cent.; at 676 revolutions, 85.1 per cent., and finally at 770 revolutions, 87 per cent. These results were then compared with the electrical energy supplied to the motor in each experiment and they were found to correspond very closely, after the usual electrical losses in the motor itself were deducted. The mechanical horse-power was thus checked by the electrical horse-power, and at last I applied the well-known formulæ for the efficiency of worm gear, which is given in every book on mechanical engineering.

$$E = \frac{\cot\theta}{\cot(\theta - \Phi)} = \frac{1 - \mu\frac{p}{2\pi r}}{1 + \mu\frac{2\pi r}{p}}$$

Where θ is the angle of the worm thread,
μ the coefficient of friction,
r the radius of the worm, and
Φ the angle of repose between metal and metal
E gives the efficiency of the pair.

If the coefficient of friction is taken at .015, then the efficiency must be 87.5 per cent.

By means of the above tests and the formula we can find the coefficient of friction for the various speeds.

When this apparatus was attached to the car, I found that it required less current to propel it than it did previously with the chain gear, therefore I have always since used the worm gear. Mr. Holroyd Smith tried it recently on his cars, as already stated, and he told the meeting of the Society of Arts, in April last, that he "found it the most effective mode of transmitting the power from the motor spindle to the axle, taking all points into consideration."

With these remarks closes a short and incomplete chapter on gearing. There are other kinds of gearing which I have not touched upon. I cannot do better than to leave the subject in the able hands of members present, who, I hope, will supplement, criticize and amend the observations herein set forth, and thereby add to the general knowledge of one of the most important topics of the day. We are continually advancing; every hour marks a step forward in the direction of success. The grand general principles of the electrical transmission of energy are now well understood, but there are yet many other ways of adding to the sum of human knowledge, as for example in following up the details of construction, every one of which will add in some measure to the final triumph.

Digitized by Google

Even by relating our mistakes and failures we serve a good purpose. "There are," said Prof. Silvanus Thompson, "half-forgotten observations, unconnected, unexplained, and often exceptional in character, every one of which has a significance of its own—residual phenomena, every one of which is, to the scientific man, of a value beyond price. He who investigates them patiently may find a clue to their meaning and reap a rich reward from them. They are the finger-posts in the high road of discovery."

THE RIES "COMBINATION" CONDUIT FOR ELECTRIC STREET RAILWAYS.

None of the many new applications of electricity is at present watched with greater interest, or absorbs a larger share of the public attention, than its employment as a motive power for street railways, nor is there any field in which electricity can be more profitably employed, or on which it promises to effect a more rapid and noteworthy change for the better.

While electricity has been successfully applied on short suburban lines of railway, and is constantly growing in favor and popularity wherever introduced, its adoption for use in large cities, where the demand for cheaper and more rapid transit than that afforded by horse or cable traction is far more urgent, has up to this time been very backward. This lack of progress seems to be largely due to the difficulty and expense of providing practical and economical underground conduits for carrying the railway supply conductors; conduits that would not only serve properly to insulate and protect the conductors, securing safety and economy in the transmission of the current to the motor cars, but one that should combine with these essential qualities the requisite structural strength to withstand the severe strain and concussion of heavy street traffic.

An electric railway conduit which forms the subject of a patent granted September 20, to Mr. Elias E. Ries, of Baltimore, Md., appears to embrace features well adapted to the requirements of electric street railways in large cities. This conduit embodies a number of novel features, and bears evidence of having received very careful treatment in its design. One of its peculiarities is the provision made for carrying and distributing electric conductors, wires or cables for other purposes, the space at both sides of the conduit proper being utilized to this end. This, it is needless to say, is a very important advantage in many cases. It adds but slightly to the first cost of the conduit, and economizes space in the streets.

In the accompanying illustrations, figure 1 is a perspective view of the conduit, partially exposed to show the construction and arrangement. Figure 2 is a form of bracket for a double track railway, cast in a single piece, and having flanged openings for the reception of wire ducts, pneumatic tubes, etc. This view also shows the conduit channel with its contained supply conductors, and the arrangement of the track and slot rails. Figure 3 shows an ordinary cable railway conduit provided with electric railway conductors, arranged in such a manner (with respect to the cables and grips) that the conduit may be utilized simultaneously by both systems. This construction is of importance where an electric railway is required to turn into a street already occupied by a cable conduit.

Referring to figure 1, it will be seen that the supporting brackets are placed in a shallow trench, at intervals of four feet apart, and rest upon cross ties of concrete in order to insure a solid foundation. These brackets, have a flanged central spring, 6, forming the conduit channel, and on their upper surface are recessed for the reception of the track and slot rails, respectively, as shown. The track rails are

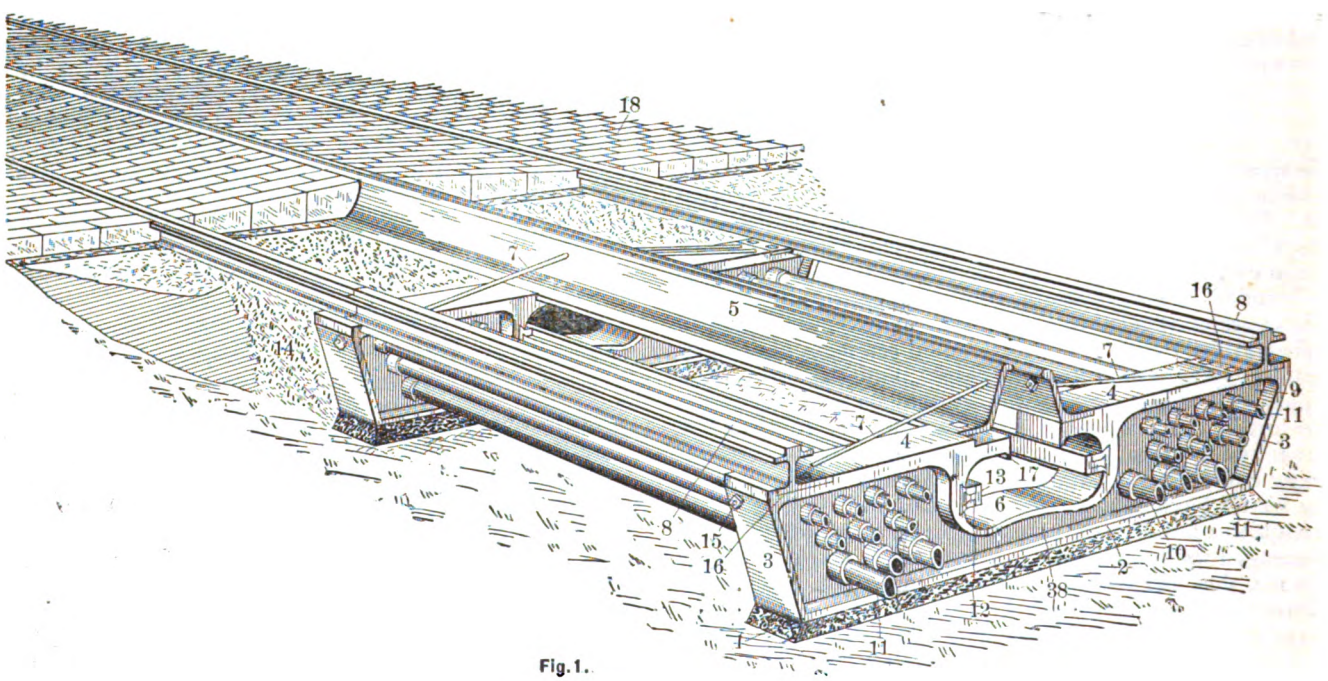

Fig. 1.

preferably of the girder type, and are self-supporting between the brackets, and they are secured in place by a locking plate, 16, so as to permit of removal without disturbing the conduit structure. The width of the conduit slot, which in this system is one-half of an inch, is regulable by means of the adjustable tie bolts 7, in the usual manner. The construction is such however, that no perceptible variation in the width of the slot, or in its distance from the rails, is possible, the entire conduit being as firmly and solidly united as if it were one single piece.

The walls of the conduit opening are provided with undercut recesses, that serve to hold insulators, 12, which are secured in place as the construction of the conduit progresses. Within these insulators the supply conductors 13 are afterwards inserted, these conductors being perfectly free to expand and contract by reason of the "slip joint" support thus formed, while at the same time sufficiently rigid to bear the pressure of the current collecting wheels that travel in a horizontal position between the two conductors. The conduit channel is provided with drainage outlets at proper

Digitized by Google

intervals, and the brackets have depending ribs, 17, that serve to deflect any water that may enter the conduit slot and to drop it clear of the conductors 13.

It will be noticed that the conduit brackets are formed with a series of flanged openings, 10, at each side of the conduit channel. These openings serve as a support for paper tubes or ducts, that are prepared in a special manner and impregnated with asphaltum to render them moisture and gas proof. These tubes extend from the centre of one bracket to the centre of the next, so as to form practically continuous tubes, and are hermetically sealed with liquid asphalt poured around a joint of special construction formed upon their ends. When the tubes between two or more brackets are in place the space between the brackets and around the conduit channel is filled with a suitable cement or concrete, which securely embeds and protects the tubes and serves as a support for the paving blocks, thus making not only a very economical and permanent conduit structure, but forming an extremely smooth, solid and durable roadbed and street surface. At intervals of one or two blocks man-holes are provided for gaining access to the ducts or tubes, and for making connection between the conductors or wires carried in the main conduit and those of branch or distributing conduits at street intersections. The interior of the paper ducts may be perfectly smooth. As the expense of providing and laying them should be comparatively small, Mr. Reis's conduit system would seem to deserve careful consideration in localities where the burying of overhead wires is receiving attention. The rental of conduits for general electrical purposes might prove a very substantial source of revenue to a street railway company.

Owing to the novel form of current collectors employed in the Ries electric railway system, which it is hoped will be described more fully in a later issue of THE ELECTRICIAN AND ELECTRICAL ENGINEER, the depth of conduit channel necessary is but six inches, and the entire depth of conduit shown in figures 1 and 2, measured from the street surface, does not exceed 18 inches, thus saving the expense and obviating the various underground obstructions common to deeper excavations.

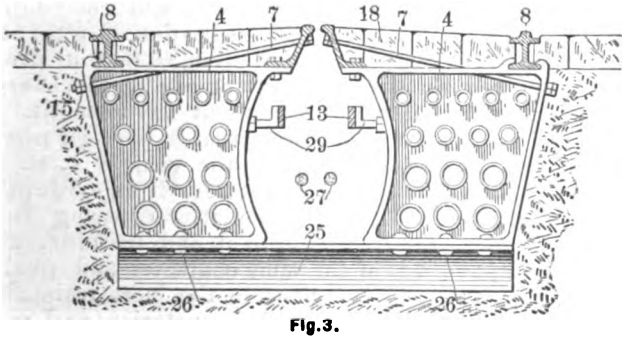

Fig.3.

It will be apparent that the wire ducts are not essential to the conduit, but may be omitted in localities where they are not required without interfering with the general construction shown.

Mr. Ries, it is understood, has devised a number of conduits differing in many respects from those forming the subject of the present article, which are specially adapted to the requirements of different localities and systems of operating. The form of conduit illustrated in figure 1, is known as "The Ries Combination Conduit, No. 3," and a special feature of all these conduits is that they are interchangeable; that is to say, the distance between the supply conductors and their depth below the street surface is the same in all cases, thus permitting motors of one railway to run with equal facility upon another line provided with a different class of conduit.

MAXIMUM WORK OF AN ALTERNATING E.M.F.[1]

BY GISBERT KAPP.

THE following investigation applies to all cases where the whole of the work is done in the circuit which receives current from some source of supply having an impressed alternating E. M. F., but it does not apply to those cases where the E. M. F. is impressed on a primary and the work is done in a secondary circuit. As an example, take the case of glow or arc lamps fed in parallel connection direct from two mains between which is maintained an E. M. F. alternating according to a simple sine function. We assume the mean value of this E. M. F. as measured by a Cardew voltmeter or a Thomson electrometer to be maintained constant whatever may be the quantity of current taken by the different lamp circuits, and the periodic time of the wave of impressed E. M. F. to be also constant.

We also assume that each parallel contains a portion having a sensible self-induction, and the problem is to find what resistance should be given to the lamp in order to

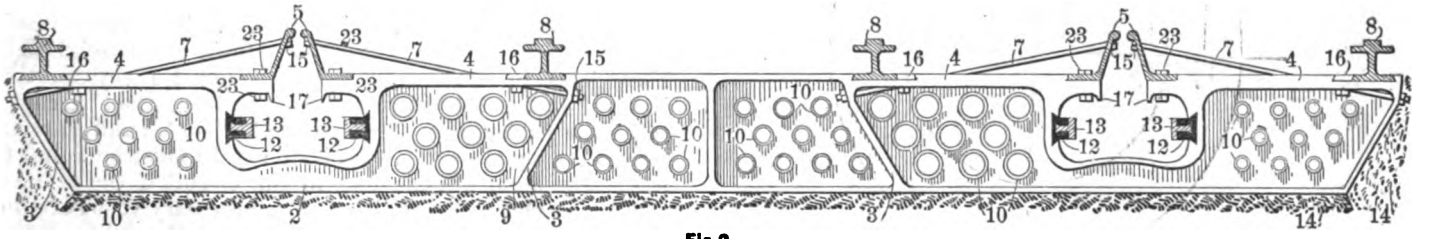

Fig.2.

use up or rather transform in it a maximum of energy with the given impressed E. M. F. With a unidirected and constant E. M. F. the lower the resistance the greater would be the energy used up in the lamp; but this is evidently not so in the case of an alternating E. M. F., since upon short circuiting the lamp completely the current does not exceed a certain maximum—which is determined by the self-induction of the circuit—and during a gradual reduction of resistance of the lamp, the current, being one of the factors determining the work, remains therefore finite, whilst the other factor (the E. M. F. over the lamp terminals) approaches zero. A maximum of work can therefore not be obtained by the simple expedient of reducing the resistance of the lamp to its lowest possible value. That an excessive increase of resistance will not accomplish the desired effect is self-evident, and we are thus led to the conclusion that between these extreme values of resistance there must be at least one special value for which the work done in the lamp becomes a maximum. The value of this particular resistance must naturally depend upon the E. M. F. of supply, the periodic time, and the self-induction of the circuit.

Before proceeding further it will be convenient to point out that the same consideration applies to a circuit fed from the secondary coil of a transformer, the primary coil of which is connected in parallel across the mains from an alternate current machine. In this case the E. M. F. appearing on the terminals of the secondary is very nearly constant if the E. M. F. between the mains is kept constant, a condition which must necessarily be fulfilled in a network of mains for public supply of electricity on the parallel system. We may therefore consider the E. M. F. induced in the secondary coil as an E. M. F. impressed upon the ter-

1. Read before the section of Mechanical Science of the British Association for the Advancement of Science, *Manchester*, September, 1887.

Digitized by Google

minals of the circuit in which the work is to be done, and thus our problem becomes applicable both to the direct supply and to the supply by means of transformers.

Let in the diagram $OE = E$ represent the impressed E. M. F., and $OI = I$ the resultant current, both being maxima, that is the crest of their waves, and let φ be the angle of lag. The maximum value of the E. M. F. due to self-induction is then obviously given by the line $\overline{OE_s} = E_s$, and the maximum of E. M. F. necessary to overcome the inert resistance of the circuit is given by the line $\overline{OE}\rho = E\rho$. If r denotes the resistance and L the self-induction, we have $E\rho = rI$, and $E_s = LI2\pi n$. The angle of lag, as is well known, is determined by the relation

$$ty\varphi = \frac{2\pi nL}{r}.$$

We may now represent the impressed E. M. F. and the resultant current at any moment as the projections of the two lines OE and OI on the vertical, these lines being sup-

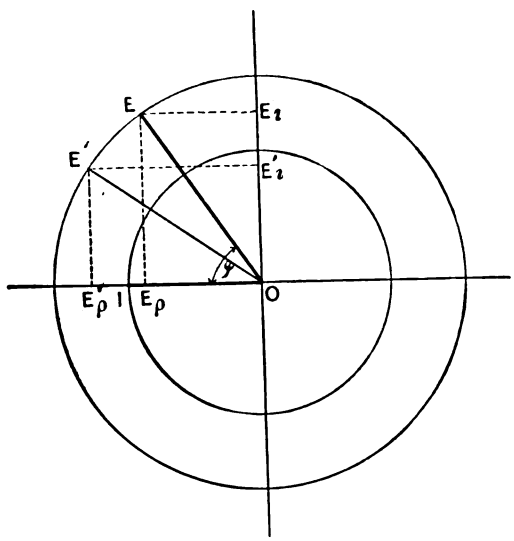

posed to revolve round O at a fixed speed, and to always maintain their angular distance φ. Let α be their angular advance at the time t, then $e = E \sin(\alpha + \varphi)$ and $i = I \sin \alpha$ represent E. M. F. and current at that particular moment, and

$$dW = EI \sin(\alpha + \varphi) \sin \alpha \, dt$$

represents the work done during a further angular advance during time dt. If $T = \frac{1}{n}$ be the periodic time, $\alpha = 2\pi nt$ and the above equation can also be written as follows:—

$$dW = \frac{EI}{2\pi n} \sin(\alpha + \varphi) \sin \alpha \, dt$$

By integrating between the limits $\alpha = 0$ and $\alpha = 2\pi$, we obtain the work done during the time T (that of a complete period), and by dividing the result by T we obtain the work done in unit time, or the rate of doing work as generally expressed in watts. The operation gives

$$W = \frac{EI}{2} \cos \varphi \ldots\ldots\ldots\ldots\ldots\ldots\ldots\ldots\ldots\ldots (1)$$

Since the mean value of E. M. F. and current measured by instruments is $\frac{1}{\sqrt{2}}$ of their maxima, we have also

$$w = ei \cos \varphi,$$

e and i being these mean values. This expression enables us to determine the work done from readings taken with a voltmeter and a current dynamometer, provided we know the resistance of the circuit. From the diagram it will be seen the angle of lag is found by the formula $\cos \varphi = \frac{ir}{e}$, and substituting we obtain $w = i^2r$, which is self evident. This result might have been obtained without introducing the E. M. F. at all; but, as will be shown presently, the investigation applies also to cases where, besides an inert resistance, there is a counter E. M. F. in the circuit, and then the term i^2r is not a correct measure for the work done, and the more general expression given in equation 1 must be used.

From a commercial point of view, it is important that the lag should be small, because the size of the dynamo and mains is governed by the product EI, whilst the work done by the dynamo is governed by the product $\frac{EI}{2} \cos \varphi$, and it is evident that if φ be very nearly 90° we would require an enormously large plant to do comparatively little work. Generally speaking, the size of the plant for a given amount of work will be inversely proportional to $\cos \varphi$. In a continuous current system there is no lag, and the whole volt-ampere capacity of the plant is actually available for useful work; in an alternate current system this capacity becomes reduced in the ratio of $1 : \cos \varphi$, and $\cos \varphi$ might therefore be considered to represent the plant efficiency of the system.

Returning now to the original problem, we have to find the condition under which the work EI $\cos \varphi$, and therefore I $\cos \varphi$, becomes a maximum. From the diagram we see that E_s or $2\pi nLI = E \sin \varphi$, and therefore $I \cos \varphi = \frac{E}{2\pi nL} \sin \varphi \cos \varphi$. To make this a maximum the angle of lag must evidently be 45°. The same result has been found analytically by Mr. Snell, and published in his articles on "Alternating and Induced Electromotive Forces," in *The Electrician* of August 13th, 1886. Graphically, the projections of OE on the horizontal and vertical must have equal length, that is to say E_s must be equal to $E\rho$. Maximum work is done in the circuit if the E. M. F. of self-induction equals the E. M. F. necessary to overcome the inert resistance. In this case the following relation must evidently obtain $r = 2\pi nL$, and by choosing the resistance so as to satisfy this equation we obtain a maximum of work from the given mean E. M. F. e, and in a circuit of given self-induction L. The E. M. F. which is used to drive the current through this resistance is .709 of the impressed E. M. F., and this figure represents also the plant efficiency of the system.

The above law of maximum work is capable of application to the case of a series wound electromotor worked by an alternating current. An ordinary series wound continuous current motor can be worked by an alternating current if the field is sufficiently laminated to prevent the formation of eddy currents. There are certain reasons which render it inexpedient and uneconomical to work any apparatus for the utilization of alternating currents at high degrees of saturation, so that in practice the strength of field of such a motor can be considered as strictly proportional to the current at any moment. In a motor of this kind the flow of current is opposed not only by its inert resistance, but also by the counter E. M. F. developed in the coils of the armature. It is evident that at constant speed of rotation the latter opposing force is proportional to the strength of field, and therefore also to the current, and it is of the same character and period as the E. M. F. necessary to overcome the inert resistance of the circuit. Retaining the above notation, and writing ki for the counter E. M. F. of the armature, where k is a co-efficient depending on the constructive data of the machine and on its speed, but not on the periodic time and self-induction, we have at any moment $e\rho = (r + k)i$, and the condition of maximum work is $r + k = 2\pi nL$. In order that the motor may absorb maximum work, it should be so constructed that the sum of the counter E. M. F. of the armature and the E. M. F. necessary to overcome its inert resistance equals the E. M. F. of self-induction. In order to obtain a high efficiency, r must be small

Digitized by Google

as compared with k, and in this case we may as a rough approximation neglect r, and say that the motor will give out maximum work if its counter E. M. F. equals the E. M. F. of self-induction. This law has a striking resemblance to Jacobi's law of maximum work obtainable from a continuous current motor. There the condition is that the counter E. M. F. should equal the E. M. F. necessary to overcome the inert resistance of the circuit; but whilst in this case the commercial efficiency must be less than 50 per cent. in the alternate current system it may be much more. In so far the alternate current motor would seem to have an advantage over the continuous current motor, but this advantage could scarcely be realized in practice. On the one hand, we never work continuous current motors with maximum output, whilst on the other hand it will be found extremely difficult, not to say impossible, to work a series wound motor by an alternating current of reasonably short period in such way as to satisfy the above conditions for maximum work. It will generally be found that in a motor of this type, owing to the great magnetic inertia of the field, the E. M. F. of self-induction is considerably greater than the counter E. M. F. of the armature, and that to increase the latter without at the same time increasing the former, we should require to run the armature at too high a speed. But even if we cannot completely fulfill the condition of maximum work we can at least attempt to approach it, and the above investigation may serve to show in what direction improvements should be made if we wish to solve the practical problem of obtaining motive power from alternating currents. In experimenting with machines of this class it is, of course, necessary to have some easy means for the determination of the co-efficient of self-induction, angle of lag, and plant efficiency. These points can be easily determined by means of the diagram. Two experiments only are required. First, note the mean current and mean terminal pressure when the armature is prevented from revolving; and secondly, note the mean current when the armature is revolving aud doing work, the terminal pressure being adjusted to have the same value as formerly. Let, in the diagram, the line $OE\rho$ represent the E. M. F. required to overcome the inert resistance of the motor. This can be calculated from the known resistance and the measured current. By erecting a perpendicular in point $E\rho$, and prolonging to the point of intersection with the circle representing the impressed E. M. F., we find the point E, the angle of lag φ, and the horizontal projection of OE gives OE_1 the E. M. F. necessary to overcome self-induction. Since the latter is proportional to the current which has been measured, the co-efficient of self-induction can now be determined. When the armature revolves the current becomes reduced, and therefore the E. M. F. of self-induction assumes a proportionately reduced value, which in the diagram is represented by the length of the line OE'_1. To this corresponds the point E′ on the circle of impressed E. M. F., and projecting this point vertically we find $E'\rho$ as the E. M. F. necessary to overcome the counter E. M. F. of the armature and the inert resistance of the motor circuit. The latter can be calculated from the current and resistance, and thus the counter E. M. F. of the armature and the electric energy actually available for conversion can be determined.

ABSTRACTS AND EXTRACTS.

ELECTRIC TRACTION ON THE BRIGHTON DISTRICT TRAMWAY.

New ideas, even if supported by experimental evidence, are slow to make headway, and electric propulsion of street cars is no exception to this rule. Whatever may have been the causes which have delayed the development of electric tramways, a certain skepticism on the part of the public, and we fear even on the part of many engineers, was one of the most important. Many doubts arose as to the economy and efficiency of the system, and unless these points can be satisfactorily disposed of by the results of actual work on a large scale, it is hopeless to expect that the average surveyor or local board engineer, or even the engineer to a tramway company, would take upon himself the responsibility of recommending electric traction. Nor would this be desirable, for an indiscriminating adoption of new methods must include both bad and good, and in some cases lead to failures, the moral effect of which cannot easily be effaced. We have seen this process in full operation during and after the electric light "boom" of a few years ago, and electrical engineers are still suffering from the effects of it. There is not much probability that a similar thing will happen with electric traction. We have entered into a period of sober and conscientious work, and although the development may seem slow, it is very sure.

In this respect some excellent work has been done quietly by the Electric Traction Syndicate, Limited, of which Viscount Bury, Lord Egerton, of Tatton, Mr. R. Macpherson, Mr. M. Immisch, and many other men of high standing, are members. The members of the syndicate have set themselves the problem of finding by actual trials, on a large scale, the best battery, motor, and gear for automotor cars, and having done so, to introduce electric traction on tram lines. So far as may be judged from a visit to their line at Southwick, they have succeeded with the first part of their programme, and there is little doubt that they will succeed equally well with the second part, and that through their instrumentality electric tram-cars will become familiar objects on some of the metropolitan lines. Those who are still skeptical about this method of propulsion cannot do better than pay a visit to the Shoreham and West Brighton line, and watch the behavior of the electric cars. This line has been chosen on account of the great difficulties it offers to electric, and in fact to any kind of traction; the syndicate rightly judging that if they can succeed on a road having curves of only 30 feet radius, and gradients as steep as one in 20, they will succeed on any other line. On Tuesday last we had an opportunity of inspecting the line and riding on the electric cars. The work of the syndicate began in April last year, and included experiments with a large variety of batteries, motors, and gearing. It is perhaps too much to say that a stage of finality has already been reached, but the present plant is sufficiently developed to answer its purpose in a thoroughly practical manner, and as we said before, the technical part of the problem may now be considered solved. The accumulators used are those of Mr. Roger Tatham, of Rochdale, and the plates consist of a spiral lead grid holding the active material. Originally the inner end of the spiral was free, the current being taken off at the outer end only; but as this caused considerable internal resistance, the distance to be traversed by the current has been shortened by making the upper bends of all the spirals to touch one another by burning them together. The active material is mixed with a certain proportion of unbleached wood pulp, by which means great porosity and storing capacity are obtained. It seems that the vegetable cells of which the wood pulp is composed do not lose their quality of permitting osmose to take place across their walls, even after they have ceased to form part of the tree or plant, and thus the transfer of gases and of the liquid to and from the inner portion of the plate can take place almost as freely as if the pores were not filled by cellulose. Two sizes of accumulators are employed; the larger (A size) contains in each box 11 plates 9 inches by 6 inches, of which five are positive, whilst the smaller (B size) contains 13 plates 7 inches by 4½ inches, of which six are positive. The plates are about one-fourth inch thick, and the storage capacity is respectively 200 and 150 ampere-hours, whilst the weight of each cell complete and filled

Digitized by Google

with acid is respectively 56 pounds, and 40 pounds. The boxes are of paraffined wood lined with lead. For convenience of handling, the cells are arranged in groups, six of the A size being held in a wood and iron cradle, and four of the B size being similarly supported. The cradle adds four pounds to the weight of each cell. The large cells are used in an electric locomotive, and the small cells in the automotor cars. The electric locomotive has been built with the object of hauling exceptionally large passenger cars, and is able to move a paying load of 74 passengers, viz., 60 on the car and 14 on the locomotive. The frame consists of strong angle iron well braced and fitted with shelves for 28 cradles containing 168 boxes in all. The wheels, axle boxes, and springs are of the ordinary railway type, and the power is transmitted from a 10 n. h. p. Immisch motor by means of steel pinions on either end of the spindle to internally geared gun metal rings, bolted to the driving wheels. To insure a constant distance of centres the body of the motor is provided at one end with two sleeves embracing the axle of the driving wheels, and the other end of the motor is suspended from the frame. It is proposed to fix a second motor to the other driving axle, but at the time of our visit only one motor was fitted. This type of gearing, however, will not be used in future. Mr. Immisch proposes to place one larger motor, with a vertical spindle in a well formed between the two tiers of batteries, and to transmit the power by bevel gear to a horizontal shaft, whence four link chains will convey it to the two driving axles. The total rolling weight of the locomotive is about 12 tons, 3 tons to each wheel.

The most important for ordinary tramway work are, however, the automotor cars, of which several are ready for service. These are of the type known as summer cars, seating 21 people—10 in a central cabin and five at each end, besides the driver. The cells, 80 in number, are of the B size, and are placed under the seats, whilst the motor is attached to the under side of the floor, the driving power being transmitted to one axle only. It is a 7 n. h. p. series wound Immisch motor, running at a thousand revolutions per minute when the car travels at the rate of nine miles per hour. The weight of the car was originally one ton, but by the addition of the motor and gear, some structural alterations and strengthening, this weight has been doubled. The accumulators weigh 35cwt., and taking the weight of 21 passengers at 30cwt., we obtain a total rolling weight of 5 tons 5cwt. The wheels are 2 feet 6 inches diameter, and the wheel base is 5 feet. The speed of the car axle as compared with the motor spindle is reduced ten-fold in two steps, there being an intermediate shaft. The gear deserves special notice, link chain being used for both motions. It will certainly surprise engineers to learn that a heavy steel link chain is employed to take off power from a spindle which normally runs at a thousand revolutions, and which at times may run as fast as 1,400 revolutions. With a chain wheel six inches in diameter, this gives a linear maximum speed for the chain of 2,200 feet per minute, and we must confess that we look upon the employment of so high a speed as a bold, not to say hazardous, step. Yet in practice there seems to be no difficulty, and as far as we could see, the chain seemed to work very well indeed. It is of Hans Renold's make, with very broad links 2¼ inch pitch. The slow motion is also worked by a chain of similar type, but correspondingly heavier.

Mr. W. D. Gooch, the engineer to the syndicate, has carried out a large number of experiments to determine the co-efficient of traction on this line. An electric car offers special facilities for such work, since the work done by the motor can at any moment during the run be computed from the readings of an ampere meter and a volt meter, the efficiency of motor and gear having been previously ascertained by brake trials in the shop. In this way it was found that the average co-efficient of traction throughout the line varied between 42 pounds and 55 pounds per ton of rolling load, according to the more or less dirty state of the rails. There are, however, some very heavy gradients, on which the traction would be considerably increased. To vary the tractive force and the speed, a switch is fitted at either end of the cars by which the batteries can be put either all in series or into two parallels of 40 boxes each. In the former case the available pressure is 160 volts, and in the latter case 80 volts. During a run from Shoreland to the depot at Southwick, and from there to West Brighton, we took frequent readings of pressure and current, and found that the energy supplied to the motor with the two halves of the battery in parallel averaged about 5 h. p., and with the whole battery in series about 13 h. p., the speed during the first portion of the run being 9.4, and during the second portion 11.6 miles an hour. The most remarkable performance of the car was its taking a long gradient of one in 20 at a speed considerably faster than walking pace. The current on this occasion was 85 amperes and the pressure 140 volts, corresponding to 16 h. p. electrical energy supplied to the motor. The car appears to be under perfect control, and can be worked from either end. The reversing is done by sending the current through the armature in the reverse direction, there being two pairs of brushes, one for going forward, the other for going backward. Either pair when in position is automatically locked, so as to prevent jarring off and sparking from vibration. The electric cars were inspected and passed by General Hutchinson on the 18th inst. In concluding this brief account of our visit to the Shoreham-Brighton line, we are glad to be able to congratulate the syndicate upon the results they have achieved.—*Industries.*

THE MAGNETIC FIELD.

(On Mr. Carl Hering's "Explorations of the Magnetic Fields surrounding Dynamos" in THE ELECTRICIAN and ELECTRICAL ENGINEER, August, 1887.)

THE papers of Mr. Carl Hering on the "Explorations of the Magnetic Field surrounding Dynamos" reveal some interesting facts concerning the machines dealt with. It is true the tests were made three years ago, and with machines most of which, we presume, have become obsolete, but they are still valuable as showing how machine frames ought or ought not to be constructed with regard to magnetic distribution. The object in all dynamo construction is to obtain a strong magnetic field in the gap, between the poles of the magnet and the armature core, in which the conductor moves, and for the purpose of achieving this end some have attempted to surround the armature itself by magnetizing coils, which thus act directly to produce the strongest field where desired. It is not unlikely that by these means a stronger field may be produced in the gap for a given exciting power, but the disadvantages attending this construction—such as the difficulty of removing the armature and general inaccessibility of parts—are so great as to militate against its general adoption. The additional ampere-turns required for the production of the field is a small matter compared with the great advantages possessed by machines designed with an eye to the prompt execution of repairs. We are, therefore, inclined, these things considered, to wind the magnetizing coils not over the armature directly but on masses of iron brought into close proximity with it, content to sacrifice, in leakage across the poles, a certain portion of the field we create, but keeping the space between polar surfaces and armature core as small as possible that the sacrifice may be a minimum.

The whole of the space, through which the lines of force curve, may be considered as in the magnetic circuit, inasmuch as it serves for their conduction whether filled up with iron, copper, or air. Lines of force always form closed curves, and from Mr. Hering's maps some appear to close in curves embracing a very small area, while others stretch away out into space. It really matters

Digitized by Google

very little where the lines of force stray after they are made to go through the armature. They may go through iron or through air, the only difference being that a greater excitement is required to produce the field where it is wanted in the latter case than in the former. A curious distribution is shown by the "Jumbo" Edison machine, where the-iron part of the magnetic circuit is not of uniform section throughout. On the top side we have two sets of magnet cores, and two massive pole pieces, one above and one below, to guide the lines of force through the armature. But on the bottom side we have only one set of magnets and a thin yoke piece to complete the circuit; a great number of the lines of force going through the armature, stray therefore in the surrounding air to return to the top magnet cores. The bottom magnets and yoke are practically saturated, and on account of the high magnetic resistance resulting therefrom, a large amount of exciting power is needed to produce the requisite field in the conductor gap. In modern dynamos, with one or two exceptions, this defective construction has been avoided, the section of the yokes being always greater than the cross-section of the magnet cores on which the coils are wound. The only way to diminish leakage, and at the same time to create a field with minimum exciting power, is to put plenty of iron in the magnets with a corresponding quantity in the armature core, taking care that the lines of force are not wire-drawn in any part of the circuit.

The map of distribution in the Weston machine seems to show that there is too little iron in the armature and yokes if Mr. Hering's lines can be taken as representing by their closeness the density of the field. The maps of the Van Depoele and Thomson-Houston machines are also very instructive, the former showing how a machine ought not to be constructed, and the latter, "as usual," eclipsing everything in the extraordinary character of its field, and, according to our lights, the worst of the lot.

But these explorations show that much has yet to be learned respecting the magnetic fields. We are, in England, chiefly indebted to Dr. Hopkinson for investigations in this direction and the results he has given us concerning leakage in the two machines with which his name is associated, are very valuable, In exploring the field of an Edison-Hopkinson machine it was found that 24.4 per cent. of the lines of force passing through the magnet cores strayed outside the armature, the zinc base and iron bed-plate on which the magnets rest accounting for 10.3 per cent. In the "Manchester" machine, where the density of force lines in the armature core is much greater, and which has a ring instead of a drum, the total leakage reached as much as 30 per cent. of the lines passing through the magnet cores, showing that a small area of armature core means a greater leakage. Judging from the diagrams we should imagine that the leakage of a Thomson-Houston machine far exceeds this amount, and we trust Mr. Hering at the first opportunity will supplement what he has already done by taking quantitative observations of modern machines. It is impossible to base judgment fairly on note-book sketches, and we must confess to a weakness for seeing everything in plain figures resolved into percentages.

THE ELECTRIC LIGHTHOUSE OF TINO.

The London *Standard* of June 2d, contains the following letter, over the initials "C. P. S.":—In the course of an interesting discussion at the Institute of Civil Engineers, in December last, on the Electric Lighthouse of Tino (an islet at the mouth of Spezia Bay, opposite the beautiful promontory of Porto Venere), it was stated, as an instance of the extraordinary visibility of that light at long distances, that during the official trials in April last year, the rays of its flashes (a group of three flashes every half minute) illuminated the clock on the tower of Volterra, no less than 75 miles distant and at an altitude of over 2,000 feet above the sea level, casting a distinct shadow on the disc. The Tino light, of five or six million c. p., is one of the most powerful in the world, and was put up early last year under the direction of Cav. L. Luiggi, and the late Comm. Parodi, of Geneva, on behalf of the Italian government, the optical apparatus and machinery having been supplied by Messrs. Chance Brothers & Co., of Birmingham, according to the design of Dr. John Hopkinson, M. I. C. E., F. R. S. I have lately had frequent occasion to observe the wonderful illuminating and penetrating power of that light from various points of the Tyrrhenean littoral, and in all weathers. Thus, from a point 3,000 feet above sea level, in the Carrara mountain range, from which, on a clear night, even the oil lights of Viareggio, Leghorn, and of the islands of Capraja and Gorgona, are visible, the flashes of the Tino light shooting across the sea may be seen illuminating the whole coast of the marble district and the lower slopes of the mountains with almost magic effect. Seen from the pier of Viareggio, 30 miles distant, the brilliancy of the light is positively dazzling and the shadow it casts of the Viareggio lighthouse, or of persons walking on the pier, is distinctly observable. Nay, even in the intervals between the triple flashes, the light is clearly visible to the naked eye in the shape of a red spot just about the size and brilliancy of the old Tino oil luminary. Again, though dimmed by heavy rain and thick fog, as it has been during the last few nights, the triple flash is always clear and unmistakable, and then produces, through the quasi-opaque atmosphere, and at a distance of 30 miles, the effect of the blurred disc of the moon on a small scale. This remarkable penetrative power of the Tino light is conclusive proof, not only of how admirably it is designed and suited to its essential purpose as a guiding light under the peculiar atmospheric conditions of the Mediterranean, but also how hazardous it would be to dip—that is, to divert such light, as has been suggested by some—from the horizon to the nearer sea in foggy weather, forsooth, according to the *bene placito* of the man in charge, on the presumption that in such weather the luminous rays could not reach the horizon, and would therefore be wasted. This presumption is wholly fallacious in the Mediterranean; for in the Bay of Spezia, owing to its proximity to the Appennines, the rain fall is much greater than in other parts of the Tyrrhenean Sea, and banks of land fog can often be seen hanging over the bay and Tino, when the horizon as far as Leghorn, Gorgona, and even Corsica is perfectly clear."

PROF. TYNDALL ON LIGHTNING CONDUCTORS.

Prof. Tyndall, writing to the *Times*, says: "Your recent remarks on thunderstorms and their effects induce me to submit to you the following facts and considerations. Some years ago a rock lighthouse on the coast of Ireland was struck and damaged by lightning. An engineer was sent down to report on the occurrence, and as I then held the honorable and responsible post of scientific adviser to the Trinity House and Board of Trade, the report was submitted to me. The lightning conductor had been carried down the lighthouse tower, its lower extremity being carefully embedded in a stone, perforated to receive it. If the object had been to invite the lightning to strike the tower a better arrangement could hardly have been adopted. I gave directions to have the conductor immediately prolonged, and to have added to it a large terminal plate of copper, which was to be completely submerged in the sea. The obvious convenience of a chain as a prolongation of the conductor caused the authorities in Ireland to propose it, but I was obliged to veto the adoption of the chain. The contact of link with link is never perfect. I had, moreover, beside me a portion of a chain cable through which a lightning discharge had passed, the electricity in passing from link to link en-

Digitized by Google

countering a resistance sufficient to enable it to partially fuse the chain. The abolition of resistance is absolutely necessary in connecting a lightning conductor with the earth, and this is done by closely embedding in the earth a plate of good conducting material and of large area. The largeness of area makes atonement for the imperfect conductivity of earth. The plate, in fact, constitutes a wide door through which the electricity passes freely into the earth, its disruptive and damaging effects being thereby avoided. These truths are elementary, but they are often neglected. I watched with interest some time ago the operation of setting up a lightning conductor on the house of a neighbor of mine in the country. The wire rope, which formed part of the conductor, was carried down the wall, and comfortably laid in the earth below, without any terminal plate whatever. I expostulated with the man who did the work, but he obviously thought he knew more about the matter than I did. I am credibly informed that this is a common way of dealing with lightning conductors by ignorant practitioners, and the Bishop of Winchester's palace at Farnham has been mentioned to me as an edifice 'protected' in this fashion. If my informant be correct, the 'protection' is a mockery, a delusion, and a snare."

FAST SPEED TELEGRAPHY.[1]

BY W. H. PREECE, F.R.S.

IN this Jubilee year of telegraphy many papers have been read, articles written, and speeches delivered on the progress made during the past fifty years, scientifically, practically, and commercially, but with very few exceptions has any justice been done to the advance made in England in the scientific direction. Sir William Thomson said, "You have told us how splendidly the land telegraphs are worked; you have pointed out how admirably under the influence of the government system the application of science to telegraphy has been developed. Under government management within these last seventeen years the applications of science to telegraphy have not stood still, but, on the contrary, have been pushed forward with every possible energy and with the most marvellous success." I want to describe the evolution of this system since it left the hands of Wheatstone and Mr. Stroh. The following table illustrates the progress made:

Year.	Words per minute.	Speed to Ireland.
1870	80	50.8
1875	100	70
1880	200	150
1885	350	250
Now	600	462

These results have been the consequences of: (1) Greater perfection of apparatus; (2) the elimination of electro-magnetic inertia; (3) the improvement of circuits; (4) introduction of high speed repeaters. Two reasons exist why these great advances have not received notice: they were not patented, and they emanated from government service. A patent has certainly one great use, it fixes a date and it defines an invention, but it also attracts attention to novelties and improvements, and if the patent be lucrative it incites the immoral to try and do the same thing in another way, and, therefore, often results in still further improvements. There is a very ridiculous conception abroad and widely circulated, that commercial enterprise alone is competent to excite inventive skill.

A complete set of automatic instruments consists of: (1) The perforator, which punches a strip of paper with holes, on the principle of the Jacquard loom, so as to regulate the number, order, and rate at which alternate currents of electricity are sent along a wire by (2) the transmitter, which is the automatic part of the apparatus, sending along the line those currents which at the distant end are recorded as words in the form of dots and dashes, replacing the slow and uncertain manipulation of the hand; (3) the receiver, which is an ink writer of extreme delicacy and great rapidity, recording the words in the Morse character.

(1) The perforator has not been much modified since it left the hands of that accomplished mechanician, Mr. Stroh. Experience has brought out several mechanically weak points, which have been much simplified and strengthened. They have been made to a standard gauge, both as regards the number of perforations per foot (the standard is 120 centre perforations per foot, or, counting the first and last perforation, 121 centre perforations per foot), the strength of springs, and the uniformity of parts, so that interchangeability is possible throughout the whole service. The fact that air pressure for working pneumatic tubes exists in many large post offices besides London has led to its application to punching, which is rather a severe mechanical labor, and it has rendered it possible by constructing double banked perforators to punch eight slips at one time, an invaluable reduction of labor in the transmission of news, which has grown to such gigantic proportions that frequently over 1,000,000 words have been sent in one evening from the Central Office in London. (2) The transmitter is an instrument designed to send as many re-

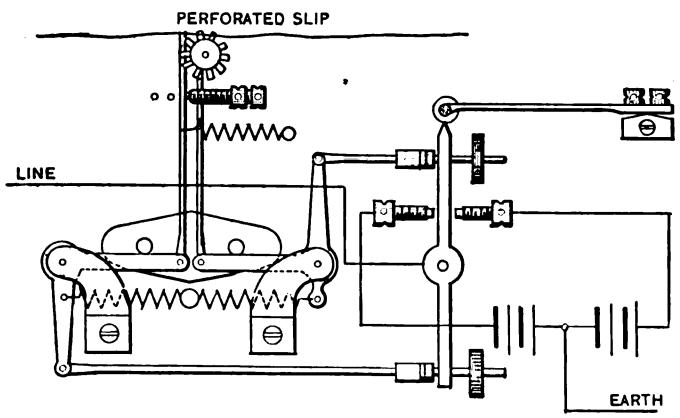

FIGURE 1.

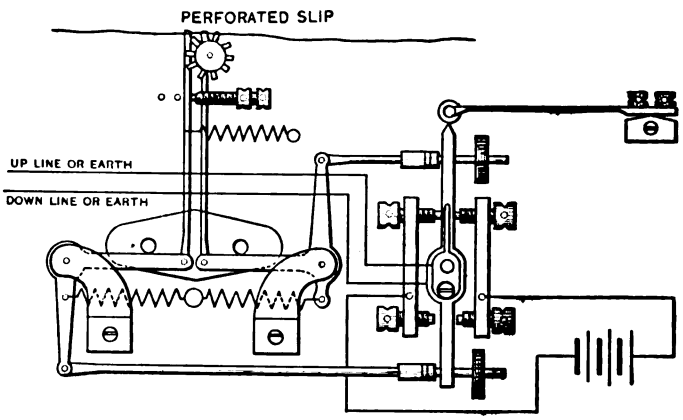

FIGURE 2.

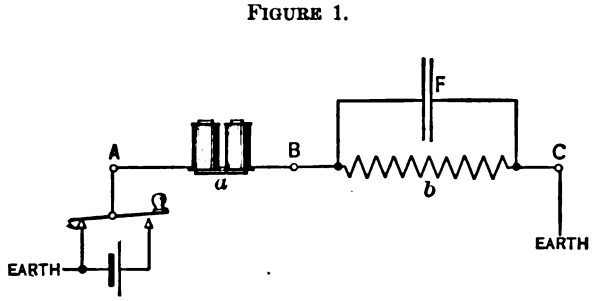

FIGURE 3.

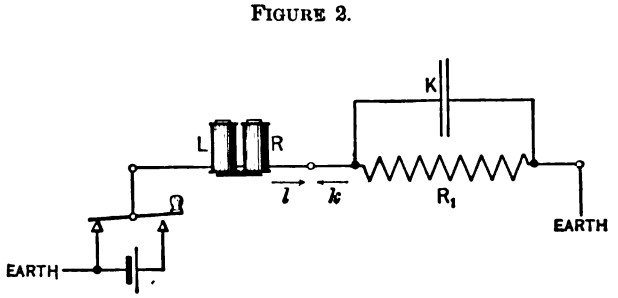

FIGURE 4.

1. Read before the section of Mechanical Science of the British Association for the Advancement of Science, *Manchester*, September, 1887.

Digitized by Google

versals of current per second through the line as the retardation and the electro-magnetic inertia of the circuit will allow. These reversals are rapid alternations of positive and negative currents, the former making dots and called the marking currents, the latter making spaces and called the spacing currents. When the transmitter runs free without any paper to guide it, these currents flow through the line with a regular frequency, which is controlled by a beautiful eccentric governor invented by Mr. Stroh. This frequency in the present transmitter can be regulated from 14 up to 240 reversals per second, which means 600 words per minute. When unpunched paper is inserted a permanent current goes to line, the motion of the electrical contact that reverses the current is checked or hindered; when the paper is punched then a dot means a complete reversal, a dash means three complete reversals, but the middle one checked by the paper; a space means three complete reversals all checked by the paper. In the earlier form of transmitter the reversal was effected by a commutating arrangement which involved time, and which could not exceed a frequency of 48 or 120 words per minute. It was a very rapid double current key using one battery. In 1883 this plan was revised, a double or divided battery was used, earth being in the centre, the contacts being simple butt contacts. The mechanism was (see figure 1) much simplified, and the possible speed of working increased to a frequency of 120 or 300 words per minute. Subsequently, in 1886, the divided battery was avoided (see figure 2) by a new form of contact of the same character, but requiring only one battery, and the possible frequency was increased to 240, or a working speed of 600 words per minute. It is evident that with such rapid working the accuracy and perfection of the workmanship must be chronometric in its character. All automatic apparatus is made in the department's own workshops where mechanicians of the highest skill are employed, where standard gauges are carefully worked up to, and where the most rigid system of inspection is exercised. One source of trouble has been sparking at the points of contact which dirties them by disintegrating the metal. Small condensers of $\frac{1}{10}$ microfarad capacity have been applied thus:

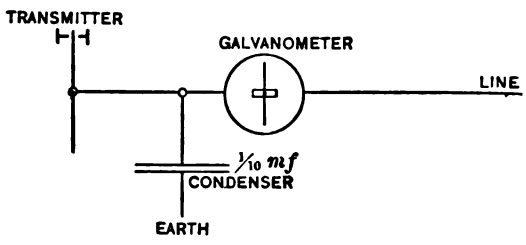

which considerably modified the evil; but it has been still further reduced by switching out the galvanometer while the transmitter is at work, for sparking is principally due to the presence of electro-magnetic inertia in the apparatus. (3) The receiver has been entirely remodeled both mechanically and electrically. The principal mechanical improvement has been replacing a spring as a motor by a weight, in order to secure a more rapid and more uniform rate of running at high speeds, and as a receiver may at one moment have to record at 400 words per minute and the next at 25 when working by hand it is clear that unless some governor be used the waste of paper would be excessive. Improved flies have been applied to Stroh's eccentric governor, so as to make it act with equal efficiency at the present high speeds. Thus, the length of the signals made and the length of paper used per twelve words is practically the same at high and low speeds. It was thought at one time that the speed of working was limited by the retardation of the line circuit, but a careful inquiry into the phenomena of electro-magnetic inertia (*Journal of the Society of Telegraph Engineers*, 1887, vol. v., page 27) led me to the conclusion that the principal source of slowness was in the electro-magnet. It is not possible, owing to this electro-magnetic inertia, to establish instantaneously through a circuit containing an electro-magnet a current of the strength due to the E. M. F. producing and to the resistance regulating it. The current strength can be brought up only gradually to its proper value. Every electro-magnet in a telegraph wire becomes an obstruction to the flow of currents, especially when these currents are rapidly intermittent or rapidly reversed. In telegraphs they lower the speed of working, in telephones they blur the clearness of articulation. It is as though the passage for the flow of electricity were restricted, as the clear way of a water pipe would be choked by the presence of a large stone in the pipe, or the efficiency of a gas pipe would be reduced by its being crushed in by a blow from a hammer. But the peculiarity of the electro-magnet is that the currents themselves cause their own hindrance, and the more frequent they are the greater the throttling or choking action. The action is not dissimilar to that of the throttle valve of a steam engine actuated by a centrifrugal governor. Hence, Lord Rayleigh has lately proposed to apply the term "throttling" to this peculiar effect of electro-magnetic inertia. Every electro-magnet has thus a time constant which determines the rate beyond which it cannot work. This time constant can be obtained only by experiment, for it depends on the quality and quantity of iron used, on the form of the core, on the resistance and quality of insulated copper wire, on the number of turns, and on the way they are wound. The battle with self-induction has been a severe one. Years of labor were devoted to determine the proper conditions to reduce these disturbing elements to their minimum point of hindrance combined with efficiency, until fortunately a means was discovered to entirely eliminate their influence. Every electro-magnet wound to a resistance R has its own co-efficient of self-induction L, which determines the rate at which a current rises or falls, and the time constant is expressed by the ratio $\frac{L}{R}$. If the two plates of a condenser of capacity K be shunted by a wire of resistance R_1, then when a current flows the condenser will be charged and the current will consequently gradually rise to its full value, and if the current stops the condenser will discharge and the current will in the same way gradually fall to zero. The time constant of such a condenser is KR_1. This is exactly the same kind of action that takes place in an electro-magnet, and by properly regulating the size of the condenser and the amount of resistance the one can be made to exactly reproduce the former. Now, if we connect up an electro-magnet and a condenser in the way shown in the above diagram (figure 4), then whenever the main current ceases, there is an E. M. F. in the magnet due to L, tending to prolong the current in the direction (l), while there is an E. M. F. in the condenser K due to the charge tending to do the same thing, but in the opposite direction (k). Hence these two effects oppose and neutralize one another when the resistances R and R_1, the co-efficient L, and the capacity K are properly adjusted. Maxwell has shown that when an electro-magnet and a condenser are balanced in a Wheatstone bridge $L = RR_1K$; but in the shunted arrangement

$$L = R_1^2 K.$$

The introduction of the shunted condenser has had the most marvellous effect on the speed of working. It has entirely eliminated any hindrance caused by the electro-magnet, and now the only cause of slow working is the mechanical efficiency of the apparatus and the condition of the circuit. I have pointed out in another paper how copper wire has removed electro-magnetic inertia from the wire, and there remains only the retardation (KR) of the circuit to check speed of working. Four hundred and fifty words a minute is now obtained with ease on circuits of two hundred miles in length, and we have on some circuits reached six hundred words per minute; but 450 is more than we can practically cope with, and, therefore, at present the apparatus exceeds in efficiency the capacity of the staff; but this speed rapidly falls off as the retardation of the circuit increases, and while we can work at the highest speed between London and Leeds, we can only get one-fourth of this speed to Glasgow. If, however, we place at Leeds a repeater, which will respond to and relay on these frequent currents, we ought to get the maximum speed to Glasgow, and this is done by the high speed repeater. The high speed repeater contains on one board all the electrical functions of two transmitters and two receivers. All causes of hindrance are removed from it, and it works at the highest possible speed. Electrically, it is an exceedingly complicated piece of machinery. It owes its efficiency to the perfection of the Post Office standard relay—a relay which has practically no time constant, which responds to exceedingly delicate currents, and which makes perfect electrical contacts—and to the use of condensers. These repeaters are very extensively used. There are special relay offices at Haverfordwest, Nevin and Anglesey to provide full speed to Ireland. The speed to Ireland in 1870 was fifty words per minute. It is now 462 words—a ninefold advance. Leeds, Manchester, Bristol and Preston have also special relay rooms. There are 101 repeaters in use. Some circuits, such as those to Aberdeen, have two repeaters in circuit, one at Leeds and the other at Edinburgh. In fact, these high speed repeaters enable the highest possible speed of working to be obtained to every part of the United Kingdom. They are arranged so as to be used at will either for automatic or for ordinary key apparatus, and either for simple or for duplex working under each class of working. The introduction of high speed repeaters and the use of shunted condensers have marked epochs in the evolution of telegraphy as eventful as the introduction of duplex working or of the telephone. The various stages of improvement which have been narrated in this paper would each form the subject-matter of a patent were it the habit in the government service to patent. Had the telegraph service been conducted under the severe competition of private enterprise, each form of transmitter and of receiver, the relay, the high speed repeater, the shunted condenser, and every other improvement would have been patented, and would have been found worthy of substantial reward. I may add that in bringing about these improvements I have been most ably assisted in

Digitized by Google

the mechanical department by Mr. J. W. Willmot, now the head of our workshops, and in the electrical department by Mr. J. B. Chapman and Mr. A. Eden, both accomplished practical electricians.

Sir William Thomson, Lord Rayleigh, General Webber, and others took part in the discussion, which was chiefly of an interrogatory character, and in his reply Mr. Preece remarked that the Delaney system of multiplex telegraphy was now being rapidly developed and perfected by the post office authorities, and lines between London, Manchester and Birmingham had already been working on this system for some time. Last week a line between London and Glasgow with repeaters at Leeds was put in operation. The highest speed hitherto reached with the Wheatstone between London and Dublin was 462 words per minute the messages passing in one way, or 231 words when duplexed. Formerly when duplexing a line the total number of words sent in both directions was always greater than the number of words which could be sent in simplex working; but the fact that in the London-Dublin line there was no increase in that number by duplexing proved that the capacity of the line was fully utilized even in simplex working. A speed of twenty complete periods (forty reversals) per second corresponds to fifty words per minute.

ON THE MAGNETIZATION OF IRON IN STRONG FIELDS.[1]

BY PROF. J. A. EWING, B. SC., F. R. S., AND WILLIAM LOW.

In March of the present year we communicated to the Royal Society ("Proceedings," vol. xlii., p. 200), the results of experiments on this subject, in which the magnetism of a narrow neck or isthmus of iron placed between the pole pieces of a large electro-magnet was examined, by suddenly drawing out the piece, or turning it end for end so that the direction of its magnetization was reversed. The piece examined was in the form of a bobbin with a short central neck, turned to a small diameter and with large spreading conical ends, which were in contact with the pole pieces and provided an easy path for the lines of induction to converge to the central neck. The metal of the neck was in this way subjected to a much greater magnetic force than it would be practicable to produce by the direct action of a magnetizing solenoid. The induction in the iron was measured ballistically by means of a coil of fine wire, in a single layer, round the iron neck. The magnetic force in the air space closely contiguous to the neck was also measured by means of a second or outer induction coil, of a slightly greater diameter than the inner one. This determination of the field allowed a correction to be applied for the air space enclosed by the inner coil, and it also gave what was probably a close approximation to the value of the magnetic force within the metal itself.

The object of the present note is to describe shortly the results of further experiments of the same kind, the details of which may be reserved for subsequent publication.

In the former experiments an electro-magnet with pole pieces 5¼ cms. square was used. The conical ends of the bobbins tested brought the central neck down to a diameter of 0.65 cm. in one form of sample and 0.923 cm. in another form. With this we succeeded in forcing the induction $\mathfrak{B}$ in Lowmoor and Swedish wrought iron up to values lying between 32,000 and 33,000 C. G. S. units, the strength of the magnetic field in the air close to the neck being then about 11,000 C. G. S. units.

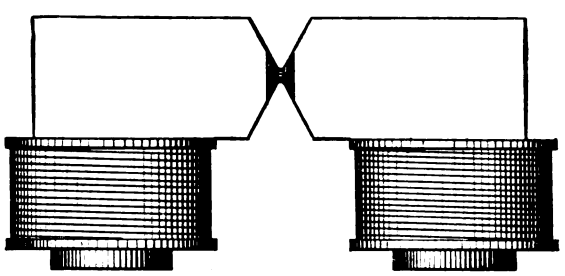

Large as those values were, they have been greatly exceeded in the present series of experiments. In the former paper we pointed out that the magnetic induction of the iron examined showed no sign of approaching a maximum, and that the value to which it might be forced by the "isthmus" method depended on the scale of the experiments. Through the kindness of Prof. Tait, in allowing the large electro-magnet of the Edinburgh University Laboratory to be brought to Dundee, we have now been able to subject iron to much higher magnetizing forces, and to secure a much greater concentration of the lines of induction. The Edinburgh magnet is one of exceptional power. Its limbs, which are vertical, are about 60 cms. long, and the cores are 10.7 cms. in diameter. Rectangular blocks of soft wrought iron 9.6 cms. square serve for pole pieces. To allow the old bobbins to be effectively used we added a pair of conical intermediate pieces of soft iron, which virtually formed an extension of the conical ends of the bobbin. Between these the bobbin was placed, the form generally used being that described in the previous paper as sample A. The neck of this sample had originally a diameter of 0.923 cm., and consequently a section of 0.669 square cm., or about $\frac{1}{14}$th that of the pole pieces. As in the former experiments, the highest values of magnetism have been reached with Lowmoor iron, and nearly as high values with Swedish iron.

The same Lowmoor bobbin that had been formerly used (sample A) had its magnetism measured by withdrawing it from the field, while the magnet with all its numerous coils in series was excited by a current which ranged up to 40 amperes. At the highest value the induction $\mathfrak{B}$ in the neck was 38,000 C. G. S., and the outside field, close to the neck, was 18,900 C. G. S. A Swedish sample of the same shape gave an induction of 37,620 with a field of about the same force.

To push the induction to still higher values the Lowmoor sample was then turned down in the central neck until the diameter was reduced to 0.397 cm. This made its section only $\frac{1}{70}$th of the section of the pole pieces. Careful determinations, several times repeated, then gave for the highest induction the enormous value 43,500 C. G. S., the outside field being 25,620 C. G. S. Here, as in the other figures already given, the induction stated is that which is found after the air space enclosed by the inner coil is allowed for; and after a suitable allowance is made for the residual magnetism of the piece. The residual induction is only about 500 C. G. S. units.

The ratio $\frac{\mathfrak{B}}{\text{outside field}}$ in this extreme case is 1.7, and the quantity $\frac{\mathfrak{B}-\text{outside field}}{4\pi}$, which would be the intensity of magnetism $\mathfrak{J}$ if the magnetic force within the metal were identical in value with the outside field, is 1,420. In the former experiments this quantity had values which decreased from 1,680 to 1,620, while the induction increased from about 25,000 to 32,000; here, with an induction of 43,500, it has fallen off to a much more marked extent. We cannot yet speak with any certainty as to the degree of approximation of this quantity to the intensity of magnetism $\mathfrak{J}$; unless, however, the mean magnetic force within the neck is much less than the force at the surface, the results show that $\mathfrak{J}$ is becoming less as the induction is being forced to these extreme values—in other words, that the iron is tending towards demagnetism in the manner Weber's theory leads us to expect. The question is one of the greatest interest, and we are now endeavoring to obtain a better knowledge of the magnetic force within the metal by examining the variation of the force at short distances from the surface of the neck.

A final effort was made to force the induction in Lowmoor iron to higher values, by turning the central neck down still further, until its section was less than $\frac{1}{1500}$ th of the section of the pole pieces, and annealing the bottom carefully before magnetizing it. The value of $\mathfrak{B}$ then reached was 45,350 C. G. S. units, which is the greatest induction recorded in any of our experiments.

With cast-iron the induction has been forced to 31,270 C. G. S., by applying a magnetic force of 16,900.

DISCUSSION.

Lord Rayleigh, being called upon by the president, said he had no experience himself in this interesting subject of induction of very high forces. The interest of it was apparent to all, and until they knew pretty definitely what did happen at the end of the curve, it was obvious that speculations as to the nature of magnetism were very largely premature. He hoped Prof. Rowland would give his opinions upon the matter.

Prof. Rowland—When I first made experiments on this subject I was troubled, as Prof. Ewing says, by a little curvature at the end. I experimented with rings of iron, and I attributed the curvature to the non-homogeneity of the iron. I turned off the offside of the ring, which had been forged originally, and then I turned off some more, and eventually I found that to some extent this curvature at the end disappeared. Therefore I attributed the whole curvature to the cause I have stated. However, my experiments were not sufficient to establish whether there was a maximum for the magnetic induction and for the intensity of the magnetization. I should say from these experiments that there would be a very decided maximum for the intensity of magnetization. When one subtracts the intensity of the field from the magnetic induction the results are very similar, and as Prof. Ewing has remarked, they often decrease in value. I suppose the decrease may be due possibly to an error in the experiments. I think they show a decided maximum of magnetism at a higher value than that I gave, but the maximum is for the intensity of magnetization and not for the magnetic induction. In that case I do not see any reason why this curvature at the end should not

1. Read before the Section of Mathematical and Physical Science of the British Association for the Advancement of Science, *Manchester*, Sept. 2, 1887.

Digitized by Google

be due to the original cause which I gave, which is want of homogeneity in the iron. There may be some particles in the original iron which do not attain their full power at once, and require a very strong field to magnetize them, and one can see very readily if one had a mixture of steel and soft iron that it would give a curve of this nature. I am not at all convinced but that the curving is something very similar to that I recently gave.

Prof. Ewing—I ought to have said with regard to the question of whether this quantity has really passed a maximum and is coming down, that it will require the field to be inaccurate to an extent of at least 12 per cent. to make the quantity really constant instead of apparently a descending one as we have it here. That is to say, the field in the last set of experiments would require to have been 22,000 instead of 25,000 in order to make this quantity constant. I do not myself quite understand why the want of homogeneity in iron should make it possible to get an induction of 45,000 C. G. S. units into it when a piece of pure iron stops at 25,000.

CORRESPONDENCE.

NEW YORK AND VICINITY.

Difficulties of Electric Railways in New York.—The Field Motor on the Elevated Railroad.—The "Bucket Shops"; Arrest of a Proprietor.—An Electric Boy throws up his Job at a Dime Museum.—The Subways.

ALTHOUGH there has been much said and written about electric street cars, there are many obstacles to be overcome before we shall see any number of them in actual use in the down-town thoroughfares of this city. It will surprise no one who is familiar with the ground to learn that the North and East River Electric Railroad Co. are encountering many difficulties in building their conduit. The rails were laid some time ago; the colling stock and motors are ready, but the work of placing the ronduit, which must be carried on at night, progresses very slowly. The vicinity of Washington market is crowded with farmers' wagons at various hours of the day and night; while sewer heads and steam pipes are frequently met in the direct line of the work. All of this delay and the expensive construction appear to offer a strong argument in favor of accumulators, especially for a line of this character. For the welfare of the whole business it is to be hoped that every possible precaution will be adopted to prevent a failure in so conspicuous a location.

The Field motor has gone through the regular cycle of mishaps, but is now likely to be heard from at any moment as flying between the terminals of the 34th street branch of the elevated railroad. The direct action feature is said to have already proved a practical success, and the contact wheel to work without sparking.

There was a ripple of excitement in the principal "bucket shop" of the city a few days ago when the proprietor, E. W. Todd, was arrested by detective Reilly on the charge of keeping a common gambling house. Mr. Todd was a pioneer in the business, and his establishment known as the New York Stock Co., Limited, located at 46 Broad street, has withstood all of the various attempts made by the telegraph companies and the Stock Exchange to suppress what is considered an illegitimate business. The warrant for arrest was sworn out by John A. Hussion, who is said to have lost a considerable amount of money in the place. The telegraph service in connection with the "bucket shops" has always been very ingeniously kept up, and its resources for obtaining prompt quotations appear to be infallible under the most adverse circumstances.

One of the modern electrical mysteries has been disclosed by a city compositor, who is a reformed "electric boy," or would be if a professional printer could be considered as reformed. He was in the employ of Bunnell, not on the corner of Liberty and New Church streets as might be supposed, but in a Bowery museum. During the electric stage of his existence he was enclosed in an oblong stall having a short counter, in front of which was a rail, leaving a passage for the gaping crowd to squeeze through in single file. By means of a sheet of zinc covered with a moist matting, the necessary battery and connections suitably arranged, this depraved youth imparted an electric shock to every person who shook hands with him in passing. The amusement seemed harmless enough until a death curdling statement in the daily papers regarding the dangers from electric wires led to a falling off in the receipts, and the boy's health failing under the strain, he determined to resign before the subway commission put him underground.

At the meeting of the Board of Electrical Control, Commissioner Gibbens called attention to the tearing up of the streets by the Steam Heating Co. The mayor joined him in denunciation of the nuisance, but sat squarely down on the proposition to put the work in charge of the Electrical Board, which he intimated was as much of a nuisance as the one complained of. A resolution was adopted calling upon the various electrical companies to place their wires in such conduits as are ready for them, within 90 days, in spite of the objection of Mayor Hewitt. It would seem to be a wise move to demonstrate practically whether the new conduits and man-holes are suitable for general use, before expending a large amount of money in putting them down all over the city, only to learn that the neglect of certain details has rendered them unfit for the service. Many of the man-holes will no doubt be found too small to permit the proper handling of the multitude of wires which the ducts will accommodate.

A realizing sense of the existence of the state authority was experienced by the management of several of the telegraph companies whose property has been attached, in default of the payment of the assessments made against them by the state comptroller. The largest amount was that of the American District Telegraph Co., $1,500. As it appears quite unlikely that the district messenger wires will be compelled to patronize the subways, they may be considered fortunate in being obliged to incur no further expense than to aid in the support of the Board of Electrical Control.

The combination of gas and the electric light is not giving entire satisfaction in Orange, N. J., and it is reported that Mr. Edison proposes to build a $70,000 plant for the purpose of supplying incandescent lamps in that district, which should be a very good field if the necessary pole rights can be secured.

New York, Sept. 23d, 1887.

PHILADELPHIA.

Dullness in Electrical Matters.—The Centennial Celebration of the Constitution.—Electrical Displays.—The Great Enterprise of Count Mitkiewicz and Mr. Wharton Barker in China.

ELECTRICALLY matters have been extremely quiet in Philadelphia and vicinity during the past month. The Constitutional Centennial celebration being the all-absorbing topic of discussion, interest in other matters seems to have been laid aside temporarily. Last Saturday (the 17th) terminated the celebration and it certainly was a remarkable demonstration of the country's progress in a hundred years. The display of electric light machinery, telegraphic apparatus, etc., was very good, but not so good as it should have been. One float in the procession contained a miniature telegraph pole with wires running down to a desk at which sat an operator receiving and transmitting imaginary messages. Other floats contained dynamo machines, electric light, telegraph and telephone wire, batteries, etc., with linemen in attendance. Another novel feature of the great civic procession was telegraphic stations about half a mile apart along the entire route. A platform with instruments and an operator, perched about half way from the tops of the poles, served this purpose admirably. These stations proved of great advantage in the prompt movement of the parade and would have been of still greater advantage in case of accidents, in facilitating the prompt summoning of ambulances and physicians. Happily no accidents occurred to mar the festivities of the occasion, and it is a very remarkable thing that all went off so smoothly and without mishap, when one takes into consideration the dense crowds which viewed the pageant from the sidewalk and reviewing stands.

It has already been announced that the Chinese government has granted to a Philadelphia syndicate, headed by Wharton Barker, the absolute control for 50 years of a telephone system which the syndicate intends to establish in China.

On Saturday in the United States Circuit Court in Baltimore, the American Bell Telephone Co. filed a bill in equity restraining William Turnbull from making or furnishing to others for use any electric speaking telephones or telephonic apparatus embodying the inventions of Graham Bell. The 1st of November next is fixed for the hearing. This suit is directed against Mr. Turnbull in order to shut off the Chinese telephone scheme with which Count Mitkiewicz and Wharton Barker are connected.

Wharton Barker was seen yesterday afternoon at the house of the Chinese envoy at Jenkintown and was in a happy frame of mind. In response to an inquiry as to the truth of the story that the Bell Telephone Co. through the injunction would hinder the progress of their great project, Mr. Barker said:

"I have carried on all negotiations in an honorable manner and the whole matter has been settled. We have nothing whatever to do with Mr. Turnbull or any other telephone inventor, and I do not care to enter into a public controversy on matters brought up in connection with our negotiations."

Count Eugene Stanistowkostka de Mitkiewicz joined Mr. Barker on the porch dressed to go into the city, and chatted pleasantly on a variety of subjects. In regard to the Turnbull affair, when questioned, he smiled, dropped his eyelids and with a deprecatory gesture waved Turnbull and all other obstacles out of existence. "The decree is signed," he said, "and the Imperial envoy is here to finish the negotiations. No efforts by anybody in this country can change what has been decreed. The Viceroy alone can revoke the decree." The count related the remark of Ma Kien Chang, made on Saturday night at the banquet to President Cleveland. As Dr. Pepper spoke of the tri-

Digitized by Google

umph of a century in America the great Chinaman said with emotion: "Ah, how I hope that 100 years from now China may be celebrating a like jubilee."

Count Mitkiewicz remarked that he did not care to enter into a newspaper discussion, but added: "What is the meaning of all this talk about myself and the plans of the syndicate? It means that the Bell company, who through Hubbard, the father-in-law of Bell, were trying to get these very concessions now granted to Wharton Barker and his syndicate, are grasping like drowning men at straws, and are doing all in their power to upset the scheme. It cannot be done. They can no more restrain Viceroy Li from manufacturing telephones or what he wants in China than they could stop the course of Niagara. Mr. Barker has stolen no one's money, has stolen no one's brains. He will use the best telephonic system he can get, Bell to the contrary notwithstanding. The grant is really a Chinese form of patent forbidding anyone else from manufacturing a like article in the empire. These new accusations are only part of a great scheme in which England, France, the Bell telephone company and the Western Union joined to defeat the Barker syndicate and obtain the franchises for themselves.

"The obtaining of the franchise," continued the speaker, "means the commercial and financial separation of Great Britain and China. The gravity of the situation is fully recognized in diplomatic circles, and the endeavors made to undermine the decree confirm the matter beyond doubt. Hitherto the banks of Shanghai and Hong Kong have controlled the banking system of that vast empire, and England, through them, has kept American enterprise out. The so-called American institutions have not been American, they have been against us. This decree means more than mere banks or telephone systems; it looks to full commercial union of China and America. The Viceroy Li, who is a learned and brilliant man, and who is thoroughly acquainted with America, has decided to break down all barriers, and, moreover, chose Americans as those above all to whom he would grant such valuable franchises.

"China is secured," continued the speaker firmly, "as she is to be half partner in the enterprise. The people of this country will soon wake up to the magnitude of the plan."

Mr. Barker in discussing this enterprise, said:

"The telephone privilege has been granted us for 50 years, whereas it was only recommended for 30 years, and we have every reason to believe that our other plans will be as well received. Our plan is simply this: To establish long and short-distance telephone systems throughout the empire, to develop the coal and iron fields, establish iron mills for the manufacture of rails and locomotives, and to introduce a banking system.

The enterprises differ from all previous efforts to establish foreign interest in China, in that the government was the first to move in this case, whereas all previous attempts have been initiated by foreign interests.

PHILADELPHIA, Sept. 19, 1887.

BOSTON.

Mr. Stockton assumes the Presidency of the American Bell Telephone Co.—Reports of the Erie Telephone Co.—An Electric Railway for Quincy.—An Electric Car Tried in Cambridgeport.—New Drawing-room Cars on the Boston and Albany.—Contentions between Gas Companies and existing Electric Light Companies.—The Introduction of Police Signals.—Yachts Lighted by Electricity.—The Club House of the Boston Electric Club.

MR. HOWARD STOCKTON assumed the chair of the president of the American Bell Telephone Company on the 1st day of this month; no changes are expected in the offices of the company. Many of the employés who came in with the original Bell Telephone Company are still in its service.

The Erie Telephone Company continues to report substantial increase in earnings in comparison with last year, as will be seen from the statement for July and the first four months of the current fiscal year, herewith tabulated—

July—	1887.	1886.	Increase.
Gross earnings	$49,571.93	$43,946.23	$5,625.70
Gross expenses	33,557.37	29,448.33	4,109.04
Net earnings	$16,014.56	$14,497.90	$1,516.66
Construction	3,470.55	1,190.05	2,280.50
Surplus	$12,544.01	$13,307.85	$*763.84
April 1 to July 31—			
Gross earnings	$195,990.59	$174,340.78	$21,649.81
Gross expenses	131,463.36	116,390.91	15,072.45
Net earnings	$64,527.23	$57,949.87	$6,577.36
Construction	12,127.42	7,890.54	4,236.88
Surplus	$52,399.81	$50,059.33	$2,340.48

NUMBER OF SUBSCRIBERS.

	1887.	1886.	Increase.
Added in July	9	†88	97
Added four months	285	127	158
Connected Aug. 1	10,007	9,051	956

*Decrease. †Loss.

At a meeting, held last night, of the citizens' committee of Quincy, recently appointed to consider the advisability of building a street railway, a sub-committee, which had made investigations, recommended that the road be laid with T rails weighing forty-two pounds to the yard, and that some form of electrical propulsion be employed. A formal application to the state authorities for a location was drawn up, the route to extend from the boundary line between Quincy and Weymouth at the Quincy Point Bridge to the boundary line between Quincy and Milton in the westerly section of the town. It is not proposed to build this entire distance at once, the route as at present laid out being from 4½ to five miles in length. The capital stock is placed at $40,000.

A trial of the electric-motor car was made on the 30th ult., from Cambridgeport to Harvard square with about twenty-five persons on board. Much faster time was made than could possibly be done with horse power. Julien batteries are used.

The Boston and Albany Railroad Company has just succeeded in a laudable effort to lessen in a considerable degree the discomfort of railroad traveling between here and New York. It took much money to do this; in, fact it cost this company $72,000. For that sum the Wasson company of Springfield has built four drawing-room cars, which were tested on a trial trip to Worcester recently by a company of about fifty gentlemen. The Roman lamps with which the cars are lighted are especially attractive. These lamps are distributed about the cars, and in each an electric light is set The effect is very pretty. Each car will accommodate thirty-six persons, and is provided with a stateroom that can be curtained off from the rest of the car for the convenience of persons who desire privacy. The Martin system of steam heating is to be used. These cars are designed to run on the 4.30 P.M. "limited" between Boston and New York.

In the Supreme Court on the 2d inst., before Judge Holmes, lawyer Dudley presented a bill in equity brought by Matthew Burns against the Newton Electric Light Company, upon which the court issued an order of notice returnable Sept. 13. The plaintiff lives on Crafts street, Newtonville, and the defendant has its machinery and buildings on the same street, within a short distance from the plaintiff's house, parts of the building being not more than twelve feet distant. The plaintiff alleges that the operation of the works creates a great noise and disturbs his rest at night, and he therefore asks for an injunction to restrain the defendant from running its machinery.

The board of gas commissioners gave a hearing on the 18th ult., on the application of the New Bedford Gas Lighting Company for authority to furnish electric light. This company, under authority of section 9 of the act of last June, authorizing gas companies to purchase or lease the property and franchise of any electric lighting company, has bought out the New Bedford Electric Lighting Company, and consequently has not been required to apply to the city government for power to maintain and operate the wires. The hearing was for the purpose of obtaining from the commissioners an authorization, under section 1 of the same act for engaging in the business of generating and furnishing electric light in the territory now operated. This was the first instance of an application in the interest of two companies jointly.

The Gas Lighting Company was represented in the hearing by president Gilbert Allen and counsel L. L. Holmes, and the Electric Lighting Company by president William Lewis and general manager S. C. Howard. The Edison Electric Illuminating Company, which was the remonstrant, was represented by president J. W. Macomber and attorney H. H. Knowlton. The latter entered the objection that if the authorization applied for were granted, the gas company would probably enter into the business of furnishing not only arc but incandescent light, although the latter is the Edison specialty. It was claimed that the Electric Light Company whose franchise had been purchased had begun to operate in New Bedford previous to the passage of the act which required the authorization of the city government. The capital stock of the gas company is $225,000, the Electric Lighting Company $100,000, and the Edison Illuminating Company of New Bedford $75,000.

The commissioners reserved their decision.

A hearing was also given by the gas commissioners on the petition of the Clinton Gas Light Company for authority to furnish electric light in Clinton and Lancaster. The company was represented by its counsel, John W. Corcoran, and there was no remonstrant. It was stated on behalf of the company that a plant for arc electric lighting already exists in Clinton, and is about to come into its possession by purchase. And later in the day an adjourned hearing was given to the Chelsea Gas Company. And on the 7th inst., there was a hearing on the petition of the Lawrence Gas Light Company for authority to purchase and unite with the Lawrence Electric Lighting Company. Mr. C. J. R. Humphreys, who represented both of these companies, stated that the gas company had a capital of $400,000 and the electric lighting company $16,000 and 110 arc lights. He claimed that the public interest would be furthered by the union. President F. E. Clarke, of the Edison Electric Illuminating Company,

Digitized by Google

argued that the consolidation would tend to destroy the field for the company he represented, which had a capital of $65,000 and about $100,000 in plant. This company is now furnishing light for Lawrence. The commissioners reserved their decision.

The Gamewell Fire Alarm Telegraph Company obtained an order from the city government, on the 23d ult., to set up and maintain police signal stations in division 4 for telephone and telegraph signal service. Two boxes were set up on the 30th inst. One of the boxes at the corner of Lincoln and Kneeland streets attracted the attention of a crowd of South Cove roughs last evening. They didn't like it, and so proceeded to knock it down.

There will be thirty boxes in this police division on trial, with the permission of the police commissioners, who were authorized by the Massachusetts general court at its last session to expend $75,000 on a system of police signals. The stations will be on two circuits, each having its head at the Lagrange station. One circuit will cover that part of the district lying east of the station, and the other circuit that part lying west. A break in either circuit will not affect the operation of the other.

Inside of each box is the call, which in appearance is like an alarm clock of the common nickel-plated style. In the centre of the dial of the call is a pointer. Around the rim are points marked with the different calls. By placing the pointer on the call wanted and pulling down the lever notice is immediately given at the central station of what is wanted by means of a system of telegraphy.

For example: Should an officer want an ambulance, he would simply have to place the pointer on the ambulance call and pull the lever. None but officers will be in possession of keys to these inside boxes, which, in addition to the signal apparatus, contain a complete telephone outfit. Inside of each station is a small iron case containing an automatic signal instrument, by means of which citizens who hold keys can summon police aid by simply pulling down a lever.

The advantages claimed for this system are its great simplicity, speed in making a call, and the advantage of the privacy which the signal house affords an officer when using the telephone. It is the oldest system of police signals in the country, and is in successful operation in Brooklyn, Washington, Chicago, Detroit, St. Louis, and many other large cities. Whether or not it will be used in Boston remains to be decided by the police commissioners. The Gamewell system has a competitor in the Wilson system, which has been in use in division 6 in South Boston for nearly a year, and which has given very satisfactory service. Both have been put in a district where there is plenty of work to test their efficiency. Time will show which is the most efficient of the two.

Mr. J. Montgomery Sears has fitted up his private summer residence at Southboro with 50 electric lights, fed by storage batteries, which are charged by a dynamo driven by a hot-air engine. He is so well pleased that he will probably fit up all his property in Boston with electric lights.

The Hospital Life Insurance building on State street has 112 accumulator cells, which are charged for four hours in the day with enough electricity to supply the entire light needed in the building during the succeeding 20 hours.

The elegant steam yacht "Cora" of the Sound Yacht Club of New York, owned by John A. Morris, of Throgg's Neck, Westchester, N. Y., has been fitted up with 54 cells of storage batteries which supply 56 lamps 16-candle power, burning seven hours, by the Electrical Accumulator Company of New York. The "Cora" made quite a sensation at Bar Harbor. The same company put in cells to feed 80 16-candle lights on the steam yacht "Susquehanna," owned by Mr. Stickney, the Philadelphia coal magnate, while she was at Hull.

There are now over 100 members on the list of the Boston Electric Club. A representative board of officers has been elected as follows:

President—Mr. Frank Ridlon, Boston, agent for the Brush Electric Light Company.

Vice-presidents—Messrs. W. B. Hosmer, of the Thomson-Houston Electric Light Company; Frank A. Houston, attorney of the New England Telephone Company; W. J. Hammer, general manager of the Edison Electric Light Company of Boston; Henry J. Pettingill, superintendent of the United Lines Telegraph Company.

Secretary—Allan V. Garratt, electrician.

Treasurer—Herbert H. Eustis, superintendent of the Eastern Electric Cable Company of Boston:

Executive committee of 15—Col. C. M. Ransome, chairman.

Membership committee of five—Mr. A. H. Chapman of the New England Telephone Company, chairman.

House committee—Mr. P. H. Alexander, of the Thomson-Houston Electric Light Company, chairman.

The following is a list of the honorary members—Prof. Alexander Graham Bell, of Washington, D. C.; Prof. John Trowbridge, of Harvard College; Prof. Charles R. Cross, of the Institute of Technology; Prof. A. E. Dolbear, of Tufts College; Prof. Elihu Thomson, electrician of the Thomson-Houston Electric Light Company; Prof. Holman, of the Institute of Technology.

The club will meet on the first Monday evening of every month, when scientific papers will be read having special reference to electricity. Exhibits of inventions and other things which would particularly interest its members will be given from time to time at the club rooms, which are located at No. 66 Boylston street. The club have the use of two whole floors, which are connected by an electric passenger elevator, the only one in use in the city. Upon the first floor is located a fine large reception room, elegantly furnished with costly carpets, rugs, pictures, etc. It is finished beautifully in polished oak. There is also the secretary's office, coat room and cigar stand on this floor. The second floor is given up to a billiard room, and contains three tables. There will be no liquors for sale in the club. The rooms will be fitted up with electric lights, electric bells, electric clocks and an electric piano, which is the only novelty of the kind in Boston. Wires will run from this piano to another in the rooms of the Edison Electric Company in Bumstead court. Music played upon this will be transmitted to that in the club rooms. Other electrical wonders will be introduced from time to time in the rooms, and the visitors will be met with surprises on every hand. The club will have a grand house warming upon the opening of its rooms, which will take place about October 1. The members of the Boston Press Club will be invited to be present.

BOSTON, September 16, 1887.

CHICAGO.

The Industrial Exhibition.—The Chicago Electrical Club.—The Pullman Palace Car Co.—Experimenting in Electric Lighting.—A Large Hotel Contract for Electric Apparatus Including Lighting.—The Western Electric Co. at Work on the River Front.

EVERYBODY goes to the exposition this month. The big building is brilliantly lighted and seems to be filled with samples of the best of everything, from the cider press to the art gallery. But for some reason or other (they would all probably say they are too busy) the Chicago electrical supply houses have not put in exhibits. The only exception is the electric lighting, and the dynamo stand attracts a good deal of attention from visitors. In a space inclosed by a railing and neatly carpeted are a 13 x 16 Buckeye engine, driving three 35-light dynamos, and a 10 x 12 Porter engine driving two 30-light dynamos. Eighty-two of the lights are hung in and around the building, the remainder being distributed among the various exhibits and booths. As perfectly lighted spaces as can be imagined are the art rooms, where 38 lamps are hung above canopies in such a way that none of them are visible from the floor. The effect of this evenly distributed light is most pleasing, the pictures showing to much better advantage in the evening than during the day time.

Two regular meetings of the Chicago Electric Club have been held this month at the club rooms, 223 Dearborn street. On the evening of the 5th the members listened to a paper read by C. C. Haskins, on the subject "Peculiarities of Electric Currents." In connection with his essay Mr. Haskins illustrated some of the peculiarities of currents by means of experimental apparatus. These experiments, and the discussion of the physical effects of currents, made the meeting one of the most interesting that have been held. Last night an interesting paper was read by E. A. Sperry, on the subject of protection of dynamos from lightning, after which electric light, telephone and motor interests were well represented in a discussion upon lightning arresters. Messrs. Sprague and Harding, of the Sprague Electric Railway and Motor Co., were present, and spoke to the members of the successful operations in their field of business.

Now that the club is an assured success it has become evident to all the members that rooms for permanent quarters should be selected and furnished at the earliest possible moment. There are at present two eligible suites of rooms in view, and a committee from the board of managers have been appointed to decide the matter. It is proposed to have billiard and reading rooms, besides the large assembly room.

The Pullman Palace Car Co. are experimenting with apparatus for lighting their cars by means of dynamos connected with the car axles. It is proposed to use small 30-light machines in connection with accumulators, each car to have a complete outfit, the power to be derived from the axle by means of a reversible clutching device. Automatic regulators are to be provided, also automatic mechanism for disconnecting the dynamo from the lighting circuit, or accumulators, whenever the speed of the car shall fall to a certain point. We understand that it is the intention of the Pullman company, as soon as this system is perfected, to take out the oil lamps and equip all of their cars for electric lighting.

Mr. John Young, general agent of the Western Electric Co., has secured within the past week the contract for a complete electric outfit for the Grand Avenue hotel, a palatial hotel now building in Kansas City and which expects to open the 6th of next May. The contract, which it is claimed is the largest of the kind ever given, covers annunciators, with bells and return calls in every room; also an improved system of automatic fire alarm,

Digitized by Google

and wiring for both arc and incandescent lights throughout the building. This hotel will contain many novel features and promises to be one of the finest in the country. The kitchen and dining rooms will be located on the upper floor, and the main building and two wings are arranged so that there will be no inside rooms; electric lights will be used exclusively. The W. E. Co. are busy making cables and electric light apparatus for the lighting of the river. They have recently closed contracts for arc outfits for the south side cable railroad shops and for Keyport, N. J.

The Pennsylvania R. R. Co. opened bids last week for two large electric light plants to be erected in Chicago, one for the Union depot, to consist of 50 arc and 900 incandescent lights, and the other for freight houses and tracks, requiring 700 incandescent and 200 arc lights. The contract may be awarded any day, and the decision is anxiously awaited, as such a large contract with this company is a most desirable one, and most of the lighting companies have put in bids.

Referring again to telephone matters in Indiana, we may say that in view of recent developments the prospect is not very encouraging for peace and prosperity in the Central Union Telephone Co.'s business in that state. The accident, or blunder, on the part of the telephone company in letting the repeal of the obnoxious law slip through their fingers, after it had been practically secured, was a most costly one, and postponed for at least two years that measure of relief. The firm stand taken by them of either toll service or else no service at all, has resulted in quarrels with municipal councils in almost every city in the state, and infringing instruments have been freely put in use. In a former letter we spoke of the situation particularly at South Bend, the council there ordering the telephone company to leave the city. The result was that the street commissioner went to work to cut down the poles and wires, and managed to do considerable damage before he could be enjoined. Judge Noyes has now denied the motion for a permanent injunction, on the ground that the question is one of municipal power, and that he can find no law to sustain the council in granting a permanent right to any corporation to occupy the streets and alleys of the city.

Another move against the Central Union company in Indiana is in the nature of a suit begun in the name of the state for $40,000, back taxes and penalties. This is on account of a law passed in 1881, requiring foreign telephone companies doing business in the state to report annually the gross amount of their receipts and pay into the state treasury 25 cents for each $100. It seems that this law has been ignored by the telephone company.

CHICAGO, Sept. 23, 1887.

LETTERS TO THE EDITOR.

Notice to Correspondents.

We do not hold ourselves responsible for the opinions of our correspondents.
Anonymous communications cannot be noticed.
The Editor respectfully requests that all communications may be drawn up as briefly and as much to the point as possible.
In order to facilitate reference, correspondents, when referring to any letter previously inserted will oblige by mentioning the serial number of such letter, and of the page on which it appears.
Sketches and drawings for illustrations should be on separate pieces of paper.
All communications should be addressed EDITOR OF THE ELECTRICIAN AND ELECTRICAL ENGINEER, 115 *Nassau Street, New York city.*

THE REIS TELEPHONE.

[76.]—The enclosed open letter to Dr. Theodore Stein is in reply to an open letter to me which appeared in your issue of July of this year. As my former article appeared in the *Journal of the Franklin Institute* I have thought it more in accordance with custom to publish in that journal. If it is not inconsistent with your usage to publish reprints, I would be glad to have my reply appear in your October number simultaneously with the October issue of the Institute Journal.

Very respectfully yours,

Philadelphia, September, 1887. EDWIN J. HOUSTON.

WAS PHILIP REIS THE INVENTOR OF THE ARTICULATING TELEPHONE?

BY PROF. EDWIN J. HOUSTON.

THERE appeared in the January number of the *Journal of the Franklin Institute*, for 1887, a short article by me entitled "Can the Original Reis Telephone transmit Intelligible Articulate Speech?" In this article was published some correspondence from Dr. Theodore Stein, of Frankfort-on-the-Main, in reference to certain experiments made by Mr. Jno. R. Paddock with old and original Reis instruments. In this correspondence Dr. Stein denies that the apparatus in question can transmit articulate speech, but acknowledges that certain other forms of Reis apparatus can transmit intelligible words or short sentences.

Dr. Stein has published in THE ELECTRICIAN AND ELECTRICAL ENGINEER for July, 1887, an open letter to me, which I have only just seen, since its author omitted sending me a marked copy of the same, and since he preferred to publish his letter in a different journal from that in which my article appeared. It is true that I am a subscriber to the excellent journal in which Dr. Stein's open letter appeared, yet, from great press of professional work, my journals had accumulated during the summer, unread, in a manner which I am sure not infrequently happens to busy men. I have therefore only just seen Dr. Stein's letter, and if it has remained unanswered so long, he has only himself to blame therefor.

Since Dr. Stein has chosen the form of an open letter, I may perhaps be pardoned for replying in this somewhat questionable style of conducting a scientific controversy.

PHILADELPHIA,

To Dr. Theodore Stein: September 14, 1887.

It is only at this late date that your open letter to me of May 25, 1887, has come to my notice. Had you seen fit to publish the same in the *Journal of the Franklin Institute*, in which the statements to which you object appeared, or had you sent me a marked copy of the paper in which you did publish, you would not have been kept waiting so long for my reply.

The burden of your objection appears to rest on my understanding of your letter of October 23d, in which certain remarks are made concerning the platinum contact and its opposing contact piece on the telephone membrane.

I quite agree with you that "such a nonsensical arrangement is against all common sense," and, indeed, as you will probably recall, I stated in my article in the January number of the *Journal:* "It is difficult for us to believe that Dr. Stein could have so blundered as to experiment with an open-circuited apparatus." Nevertheless, your letter of the 23rd of October is open to this interpretation, and I do not understand that in your open letter to me of May the 25th, you deny the correctness of the translation of said October letter, since you say in your open letter: "The sentence in my letter to you of October 23rd was intended to mean that through the vibration of the membrane, while speaking or singing in the wood cube, the *platinum point* was lifted from the membrane and thus a transmission of sound through an interrupted circuit was made." You will, of course, recognize the fact that you can hardly hold me responsible for what you *intended* to say, but only for what you actually said.

I am quite willing, however, to accept your explanation as to what you intended to say with respect to the platinum contact and its position in relation to the telephone membrane, but would here call your attention to the unfortunate antithesis you made between this form of Reis instrument and that other form of Reis instrument in which the platinum contact "rests directly on the membrane by gravity." If your meaning is that in the apparatus in controversy, the platinum contact *when not in use* rests on the membrane, but *when in use is thrown off from the membrane*, thus producing the breaks or interruptions in the circuit, which you allege prevent the transmission of articulate speech, then I am presumably correct in assuming that in the later form of Reis apparatus the platinum contact *not only rests on the membrane when not in use, but also when in use*, otherwise there would be no significance in your contrast of the two pieces of apparatus: or, as you say in your letter of October 23d: "By reason of this, there are here no interruptions of the current, but only fluctuations (undulations) in it, which is the desideratum for the production of articulate words or sentences." If you have been correctly translated here, you may, perhaps, understand my surprise at your failure to appreciate that just here lies the quintessence of the entire controversy. If Philip Reis did this, then he was the inventor of the articulating telephone, since he devised an apparatus that enabled articulate speech to throw electrical undulations on a circuit, which I suppose you will admit can transmit articulate speech.

It would appear then, from your own testimony, that Reis was the true inventor and Bell merely the improver. The question is not, as you appear to think, who invented "The first useful apparatus for the practical far-speaking telephone," but who invented the articulating telephone? No one can deny that, taken as a whole, Mr. Bell's apparatus is better suited for practical work than that of Mr. Reis, but Mr. Bell's apparatus constitutes, in the opinion of many well-known and reputable physicists in this country, mere improvements on an apparatus already invented, and was not a new discovery or invention.

Since your open letter tacitly implies a wilful misunderstanding on my part of your letter of October 23d, I will here reproduce the original letter and the translation of the same, and leave the verdict concerning the matter to such of the scientific world as may be interested therein:

Digitized by Google

ELEKTROTECHNISCHE RUNDSCHAU,
Redaktion: Kaiser Strasse, 25, Frankfurt a. M.
FRANKFURT A. M., den 23, October, 1886.

Herrn Professor Edwin J. Houston, in Philadelphia.

SEHR GEEHRTER HERR!—Ich habe durchaus nichts dagegen einzuwenden, wenn Sie den Ihnen am 21. Juli d. J. geschriebenen Brief veröffentlichen.

Trotz Ihrer gefälligen Mittheilung, dass Sie selbst keinen Zweifel in die Angaben des Herrn Professor Paddock setzen, muss ich bei meiner Behauptung stehen bleiben, dass man mit dem Apparate, welchen ich Herrn Professor Thompson überlassen habe und den Professor Thompson an die Overland Telephone Company weiter gegeben hat, nicht, wie mit den neueren Bell-Telephonen, Worte oder ganze Sätze, auf irgend eine Entfernung, auf die man nicht durch direkte Sprachvermittelung hören kann, zu übertragen vermag. Solches ist nur mit den Reis'schen Telephonen zweiter Form möglich (abgebildet in Thompson's Buch: *Philip Reis, Inventor of the Telephone*, Seite 86), weil man an diesen Apparaten die Membran beliebig spannen kann, und weil hier der Platinkontakt nicht, wie bei meinem, Herrn Professor Thompson überlassenen Apparate, etwas von der Membran absteht, sondern direkt nach dem Gesetze der Schwere auf der Membran ruht, mithin hier keine Stromunterbrechungen stattfinden, sondern nur Stromschwankungen, wie solches das Desiderium bei Hervorbringen von artikulirten Worten oder Sätzen ist.

Die kürzlich publicirte Beobachtung von Francis E. Nipher, dass man bei einer bestimmten Spannung der Membran mittelst des Reis'schen Telephons Worte übertragen könne, halte ich für volkommen richtig und bin überzeugt, dass jedes Mal, wenn, wie vor 25 Jahren, Worte order kleine Sätze mit dem Reis'schen Telephon zweiter Ordnung übertragen haben, die Membran richtig gespannt war; es war immer ein Zufall, wenn dies geschah, da Reis selbst in den Vorträgen über sein Telephon auf die richtige Spannung der Membran kein besonderes Gewicht gelegt hatte.

Wenn Sie auch diese Mittheilungen im *Journal des Franklin Instituts* publiciren wollen, habe ich nichts dagegen einzuwenden.

Ich bin mit vorzüglicher Hochachtung.

Ihr ergebenster,
DR. STEIN.

[*Translation.*]

ELEKTROTECHNISCHE RUNDSCHAU,
Editorial Office: Kaiser Strasse 25, Frankfurt a. M.
FRANKFURT A. M., October 23, 1886.

To Professor Edwin J. Houston, in Philadelphia.

DEAR SIR:—I have not the slightest objection to the publication of my letter to you, dated July 21, 1886.

Notwithstanding your statement, that you have no reason to doubt the accuracy of the declaration of Professor Paddock, I must stand by my assertion that with the apparatus which I gave to Professor Thompson, and which he subsequently gave to the Overland Telephone Company, it is not possible, as it is with the more recent Bell Telephone, to transmit words or whole sentences to any distance beyond that at which the spoken words may be heard directly. Such transmission is only possible with the Reis telephone of the second form (illustrated in Thompson's book; *Philip Reis, Inventor of the Telephone*, page 86), for the reason that in this apparatus the membrane may be tightened to any extent, and also because in this, the platinum contact does not stand off somewhat from the membrane, as in the apparatus which I gave to Professor Thompson, but rests directly upon the membrane by gravity. By reason of this, there are here no interruptions of the current, but only fluctuations (undulations) in it, which is the desideratum for the production of articulate words or sentences.

I consider the recently-published observation of Francis E. Nipher, that, by giving the membrane a certain tension, it is possible to transmit words with Reis's telephone, to be quite correct; and I am convinced that every time we succeeded, 25 years or more ago, in transmitting words or short sentences, with the second form of the Reis telephone the membrane had just the right tension. It was always an accident, when this happened, for Reis himself, when lecturing on his telephone, attached no particular importance to the proper tension of the membrane.

Should you wish also to publish this communication, you are at liberty to do so.

I am with high esteem, etc.,
DR. STEIN.

I note what you say as to the bored-block transmitter, etc., "Nevertheless, neither Philip Reis himself, nor I, *nor any other German experimenter* (my italics) has ever been able to converse with a Reis bored-block transmitter and a Reis knitting-needle receiver, as is claimed to have been done by Mr. Paddock." I presume the italicized statement as above is intended merely as an expression of your own belief, since you can hardly speak with such positiveness for the very numerous experimenters of Germany.

As regards the statement made by me in the article in the January number of the *Franklin Institute Journal*, viz: "Although the author has not personally repeated the experiments of Mr. Paddock with the original apparatus of Reis, yet he is disposed to give full credence to the statements of Mr. Paddock, because he (the author) had, prior to the publication of Mr. Paddock's letter, held an almost uninterrupted and quite intelligible conversation, continuing for some five or six minutes, in which questions and answers were given and received, by the use of a transmitter, which was an exact reproduction of the Reis bored-block transmitter, and employed the platinum contacts found on the Reis apparatus; and also because he does not see any essential structural differences between this form of transmitter and that in extensive commercial use to-day by the Bell Telephone Company."

Concerning the above, you say: "It is plain, assuming the correctness of the statements, that while using a Reis transmitter, you MUST have used a Bell Telephone RECEIVER. You cannot well venture to deny this fact, although you ignore it in your article." Permit me to suggest that this statement by you seems to me to prove conclusively that you have failed to appreciate the real question at controversy. If you will read the title of my paper of January, 1887, you will see that it is: "Can the Original Reis Telephone *transmit* Intelligible Articulate Speech." The entire question as a matter of invention is limited to the *transmission of speech*. I did use a Bell telephone receiver, but that has nothing to do with the question as to whether the apparatus, figured in figures 1 and 2 of my article, as in figures 1 and 2 of your open letter, are capable of *transmitting* articulate speech. The controversy is as to whether certain forms of Reis transmitters can transmit speech. You argue that they cannot, because you allege they produce interruptions or breaks in the circuit. I argue that they did, can, and will transmit speech. So far as this question is concerned, what matters it as to the particular form of receiver employed?

The following statement is made by you in reference to the tension of the membrane as described in Mr. Paddock's letter, viz.: "But more remarkable is the story of Mr. Paddock, which you, a scientific physicist, adopt, that he obtained the required tension of the membrane in the wood-cube telephone of Reis through the action of *sunlight*. What an imputation is involved in producing such scientific nonsense before the physicists of the whole world. Do not the two gentlemen know that every animal membrane is very hygroscopic, and that in speaking against such a membrane the moisture of the breath is absorbed, and the membrane must lose its tension, even though Mr. Paddock let the sun shine in his mouth while using the apparatus." The above is such a remarkable illustration of your apparent failure to understand the meaning of a plain statement, that I will rest satisfied with clearing myself before "the physicists of the whole world" by *simply quoting the only remarks* in Mr. Paddock's letter in which any reference to sunlight is made.

Mr. Paddock says on this point "The requisite tension of the membrane I have found to be necessary as Dr. Stein remarks. But in the absence of any mechanical means, such as is furnished by the later forms of the Reis apparatus, I have obtained the desired tension of this membrane by exposing the instrument for a short time to a dry and warm current of air, or still better, to the direct rays of the sun, without detaching the membrane in any way from the wooden block to which it is secured. Under these conditions any degree of tension can be obtained which is desired, and care only has to be exercised that this tension shall not be *too great!*"

I must take very decided exception to your charge of my suppressing facts—you say: "How is it that in your criticism of my communication you suppressed the fact that Mr. Paddock changed the Reis apparatus and did not experiment on the basis of the mode of the inventor, Ph. Reis." If Mr. Paddock made any such changes as you claim, or any changes at all, I was and still am entirely ignorant of the same, beyond what you state, since I have not at hand the report of the Overland case to which you refer. I will, therefore, leave it to Mr. Paddock to answer you in this regard, if he should think it necessary.

In a subsequent paragraph you say: "I will in your favor and to your honor believe, that you had no knowledge of *the changes which I made* on the original bored-block telephone, which went to the United States through the agency of Prof. Silvanus P. Thompson, of London." I note the necessity which has again arisen for an explanation on your part as to the correct meaning of the portion of your letter above which I have italicized, and the very careful explanation you have given in THE ELECTRICIAN AND ELECTRICAL ENGINEER for September 1887, in which you state that the above phrase, as translated for that paper, should read, "I will in your favor and to your honor believe, that you had no knowledge of the changes which WERE *made* (in America) on the original bored-block telephone, which went to the United States through Prof. Silvanus P. Thompson, of London."

If this is what you mean, then permit me to ask with which of

Digitized by Google

the statements quoted below you wish to be credited, viz.: "How is it, that in your (my) criticism of my (your) communication you (I) suppressed the fact that Mr. Paddock changed the Reis apparatus;" and "I will in your favor and to your honor believe, that *you had no knowledge of the changes* which WERE *made* (in America) on the original bored-block telephone, etc."?

Quite on a par with the lack of courtesy displayed in the above, is your statement: "That the first principle of German science is *truth*." The slur you here attempt to cast on American science is not worthy of being answered.

In conclusion, permit me to say that I am quite willing to have the scientific world pass judgment between us, as to "the manner in which we use our scientific weapons."

EDWIN J. HOUSTON,
Prof. of Physics,
Central High School. FRANKLIN INSTITUTE.

SUB-DIVIDED TRANSFORMERS.

[77.]—Having read the very interesting and valuable article on the development and history of transformers by Mr. Kennedy, reprinted in THE ELECTRICIAN AND ELECTRICAL ENGINEER, I should feel obliged if you would find space for insertion of the following note in your columns.

Some months ago Mr. Kennedy described in chronological order the different patents, in the *Electrical Review*. At that time the complete specification of my transformer had just been lodged, and consequently Mr. Kennedy could neither know the contents of this patent or mention it. It is not surprising if several people have similar ideas and independently arrive at similar results in the scientific world, as is the case here. I preceded Mr. Kennedy in this idea by about five months, and working on a somewhat different line arrived at the sub-divided transformer.

While Mr. Kennedy tried to develop the iron core by reducing the magnetic resistance, I gave my principal attention to the conductors which I wished to place in such a manner as to obtain equal distribution of work in each layer, and, therefore, throughout the whole induction coil.

This type of sub-divided transformers which is the first patented in England has several advantages over those previously described, and they will easily be recognized if I state before describing the apparatus its fundamental points of construction.

1. Equal distribution of work throughout the transformer.
2. Suppression of self-induction from one primary layer on others, and from one secondary on its neighbors.
3. Greatest possible work with smallest amount of copper.
4. Great radiating surface.
5. Simplicity in construction and repair.

The first and third conditions are attained by keeping all layers equally close to the core, they will, therefore, all have equal length (the shortest possible), and are placed in the most intense magnetic field. (Figure 3.) This is contrary to all former types, in which the superposed layers do less work per inch of conductor owing to their greater distance from the core (thereby being placed in a weaker magnetic field) and to the self-induction of the neighboring layers.

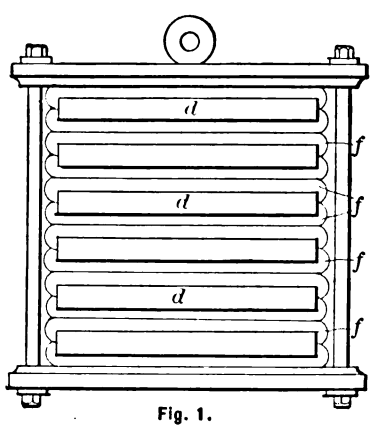

Fig. 1.

The second and fourth conditions are fulfilled by reducing the superposed layers to a minimum (or nearly so) and so arranging the core or cores, that the different systems of conductors are separated by iron (figures 1 and 2).

The fifth condition is achieved by the forms described below.

Figures 1 and 2 show two induction coils built of spirals.

Figure 3 represents cross-sections, figure 4 end views, figures 5 and 5*a* top views of some spirals or layers, and figure 5*b* a side view of the two last spirals. In all figures *d* indicates a system of primary and secondary layers, *f* cores of iron wire or strips, the latter with a flat side towards the spirals, *h* cores of strips standing on edge (figure 9), P primary, S secondary wires.

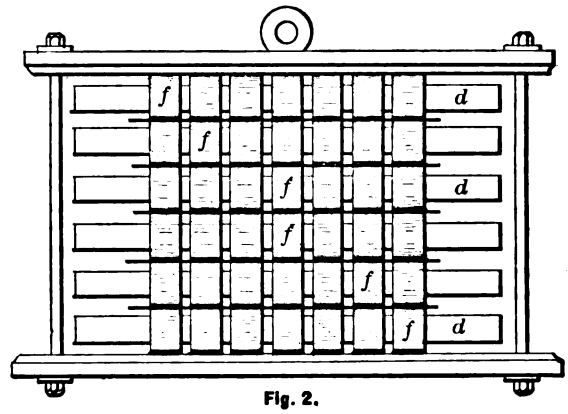

Fig. 2.

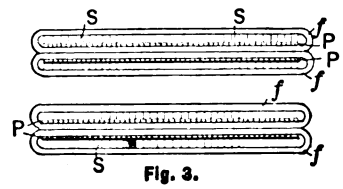

Fig. 3.

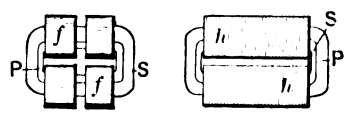

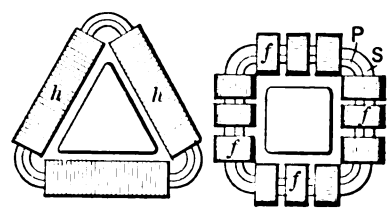

Fig. 4.

Figure 5*a* shows a new form of an iron core stamped out of sheets of iron or made of two strips forming a cross, figure 6, of which the band *aa* is passed over the outside of the layer *d* and *bb* lying in the central hollow space is connected to it, as shown in figures 7 and 8. If it is desired to place the cross on edge the modified form, figure 10, must be chosen, *aa* forms a complete loop which is slipped over the spiral *d*, and the arms *bb* are bent through the central hollow part of *d* and connected to *aa*. Another modification developed out of form figure 10 is shown in figure 11.

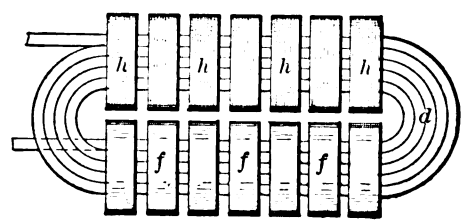

Fig. 6.

To make this apparatus a commercial success it ought to combine simplicity and efficiency with cheapness, and the question arises which is the core that combines these qualties.

Theory proves that iron wire, or strips placed on edge are most efficient, and bands put flat on the spirals or layers are not so good; but practice shows that the latter cores are by far the cheapest (being less than one-quarter in price compared with the former), and the difference in efficiency is but trifling if the width of the strips is not large.

My system compares very favorably with that described by Mr. Kennedy.

Digitized by Google

In the type described by Mr. Kennedy the sub-division is hardly complete as there are 6 or more systems of coils on one core, besides the magnet is complicated and requires a great deal of work. It is a drawback to this system that the magnetic circuits are not complete in each core, especially if the closing is affected by placing the strips on edge. To obtain good contact in this way is difficult. As is well known, inefficient connection causes the development of heat, and if the apparatus is not well bolted together the magnetic reversals tend to cause an oscillating motion at these points, which produce a loud humming noise; it is, therefore, evident that if great care is not taken in the manufacture of such a core the power wasted will be much

Fig. 5a.

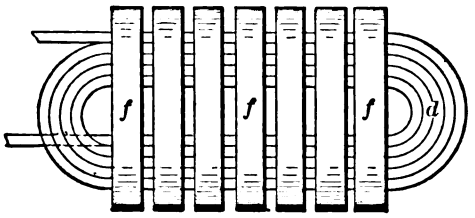

Fig. 5b.

greater than that lost by Foucault currents in magnets like *f*. It is necessary, furthermore, that the core should be complete in order that both the primary and secondary wires may be wound on it.

In the Gutmann transformers the primary and secondary layers are wound independently of each other and the core, and if the core is made of flat strips, *f*, it requires simply the bands to be cut to the desired length, a certain number after being insulated laid one over the other, passed through the central hole of *d* (figures 1, 3, 4, 5), and connected in form of concentric

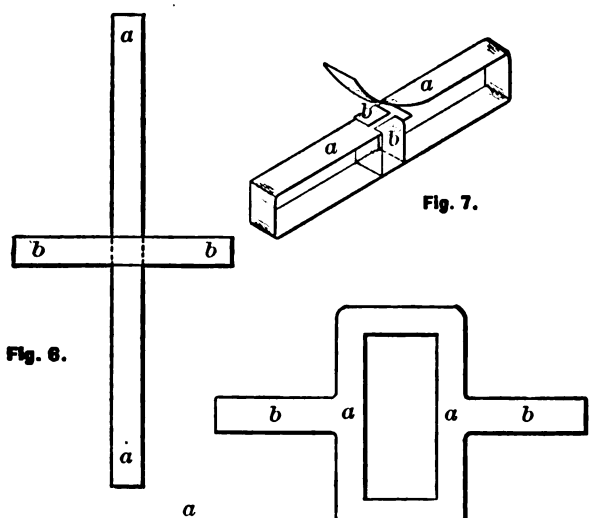

Fig. 6.

Fig. 7.

Fig. 10.

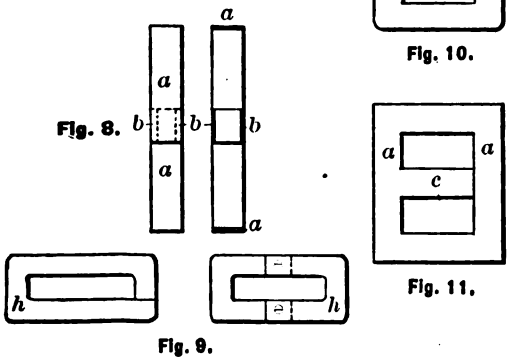

Fig. 9.

Fig. 11.

rings, or of a spiral; no bolts or screws are needed if the ends of the outside strips are well attached to each other.

Each layer is a safety fuse for the other part of the apparatus, and in case of a break-down the burnt coil can easily be disconnected and replaced without affecting any other part of the transformer.

The manufacture is very rapid and inexpensive because the work of each transformer can easily be distributed amongst several men and very few tools are required. Finally, I may state, that sub-divided transformers do not require greater space than types with a core common to all layers for coils like figure 1, working with 2,000 or 1,000 volts in the primary, and 100 or 50 volts respectively in the secondary capable of supplying two to three horse-powers remain within the space of 15″ × 6″ × 4½″. They work well and silently, and the temperature of the apparatus is negligible.

L. GUTMANN,
53, Graham Road, Dalston,
London, E.

September 8th, 1887.

ELECTRICAL NEWS AND NOTES.

THE AMERICAN INSTITUTE OF ELECTRICAL ENGINEERS.

FIRST MONTHLY MEETING.—SEASON 1887-88.

THE monthly meetings of the American Institute of Electrical Engineers were resumed September 20th, at Martinelli's Fifth avenue. Dinner was served at half-past six o'clock. After coffee and cigars the president, Mr. T. C. Martin, called the meeting to order with the following remarks:—

It is with much pleasure that we resume our meetings for the winter season with a paper so important and unquestionably so interesting as that to which we are about to listen. The attendance this evening is large and very gratifying. We are not merely a New York society, our membership extends over all the country. At the present time we have members in between 30 and 40 states and territories of the Union, and no fewer than 10 countries of Europe, the West Indies, South America and Canada. Under these circumstances it can be imagined that it is rather difficult to get all the members together when a paper is read here, no matter how important it may be.

The subject before us this evening is "Electric Street Cars with Special Reference to Methods of Gearing." Mr. Reckenzaun, our distinguished guest, as you are all aware, has made a special study of this branch of the electric motor question, and it was through his genius and ability that the remarkable trip was made across the English channel, the first of the kind on record. Not long after that trip Mr. Reckenzaun presented a paper before the London Society of Arts on a subject somewhat similar to that which he brings before us this evening, and so meritorious was it and such was the interest excited by it that the society felt justified in awarding Mr. Reckenzaun its silver medal. Mr. Reckenzaun soon leaves us to return to England to receive that medal. (Applause.)

In bringing this subject of electric cars before us this evening, it was thought possible that the paper might cover the whole subject, but after a little consultation Mr. Reckenzaun determined to restrict it more specifically to the subject of gearing, and I think you will all agree with me that there is no more important department of the subject of electric locomotion than that.

I now have the pleasure, gentlemen, of introducing to you Mr. Anthony Reckenzaun.

Mr. Reckenzaun then read his paper. (See page 387.)

DISCUSSION.

The President—Gentlemen, the valuable paper to which you have listened is now open for discussion. It is natural, under the circumstances, as we have Mr. Reckenzaun with us now, and as he is shortly to leave for Europe, that we should, so to speak, put him in the witness box and puzzle, perplex and annoy him with questions. In that way, I have no doubt we shall greatly add to our stock of information on the subject before us. But I know Mr. Reckenzaun would prefer a discussion rather than a series of interrogations, and I think that on the matter presented before us to-night, and with half the gentlemen in attendance directly interested in street railways as run by electricity, the subject should not lack ventilation; and I venture to believe that should any gentleman desire to discuss some of the points presented with Mr. Reckenzaun, he will find a foeman worthy of his steel.

Mr. R. W. Pope—There is one point in connection with the worm gearing that I have heard referred to before, and I presume, as Mr. Reckenzaun's name was mentioned in connection with it, that he can give us further details, and that is the matter of lubrication. I understood, when this question was up before, that in his use of worm gearing the worm was run in oil, and if so, I would like for one, to hear a little more about it.

Mr. Reckenzaun—The worm wheels are the first bearings. The first bearings are generally made of several collars. There is a tin box around the whole, completely around it, just having a hole with a very light stuffing box. You have the whole gear-

Digitized by Google

ing closed almost air tight. If you use ordinary lubricators, just to start the thing—the thrust bearings—and if you place two or three inches of oil at the bottom of the tank you will find that there is a perfect, continuous, automatic lubrication. The teeth of the worm wheel will lift up just sufficient oil to lubricate the worm and there will be sufficient oil always running around—flying about in the tank—to keep the whole thing well lubricated. There is hardly any waste of oil going on through leakage at the shaft or at any other points. Here you have a perfect lubrication that cannot fail at all. I believe this is the only question that Mr. Pope asked, with reference to the lubrication. Of course you can use any lubricant you wish. Some lubricants are far more efficient than others. Naturally we should use the most efficient lubricant we can get in the market. With regard to the friction surface of the worm wheel, I have mentioned that that is made of phosphor-bronze and the worm is made of steel. These two metals have a very low coefficient of friction between them. The worm is moreover turned out of a solid piece of steel and perfectly polished. The phosphor-bronze wheel is a toothed wheel thoroughly trimmed and also polished inside. Therefore, they have a perfect wearing surface to start with. The worm gearing works for a considerable length of time without any appreciable wear on the teeth at all. I think a perfectly constructed worm gear ought to run 20 years without renewal if properly lubricated. The prejudices against the worm gearing will soon wear away. Up to the present time worm gearing has been constructed on anything but scientific principles. The teeth were at a very small angle. The material used for the worm was frequently cast-iron. The worm wheel was sometimes made also of cast-iron. Sometimes they made wrought-iron worms and cast-iron wheels. Altogether the worm gearing has been constructed on anything but scientific principles.

Mr. Wetzler—I would like to ask Mr. Reckenzaun if he ever has tried to use a worm which instead of being cut cylindrically has been cut radially so as to conform to the radius of the wheel into which it geared.

Mr. Reckenzaun—I do not quite understand what Mr. Wetzler means by cutting a worm radially.

Mr. Wetzler—What I mean to say is instead of cutting your worm cylindrically have you cut it so that its outer curvature conforms to that of the wheel!

Mr. Mailloux—The hour-glass form.

Mr. Wetzler—Yes, the hour-glass form.

Mr. Reckenzaun—All the worm gearing I have constructed has been made on the plan of cutting it out cylindrically.

Mr. Wetzler—Those cut in the curved or hour-glass form are said to be more efficient according to Prof. Thurston's experiment.

Mr. C. O. Mailloux—I would like to add by way of information that this form of worm was the very first that was used. If I mistake not it was the celebrated mechanician or engineer Hunter who first devised the worm, and it was in that form that he gave it to the world—the hour-glass form as he called it. The shape of the teeth is varied as they go toward the end near which they point inwardly in a radial form as Mr. Wetzler has said.

With regard to the worm, I have watched with interest the evolution of means of transmission from the motor axle to the car axle and I am very well prepared to agree with our friend Mr. Reckenzaun that it is undoubtedly one of the most important problems that we have to deal with to-day. In fact I may say that it is the only remaining unknown quantity in the problem of electrical traction. The problem of designing and constructing electric motors has advanced by the assistance of workers, mathematicians and others, until it is to-day a question of engineering purely; but the manner in which we should dispose of the energy in order to render it available for moving the car is, unfortunately, not so well taken care of; and the very fact that we see so many diversified attempts to meet the severe requirements which Mr. Reckenzaun so well placed before us, shows that a satisfactory solution—at least one that is satisfactory to everybody, has not yet been reached. Some are very much predisposed in favor of belting, others in favor of gearing, friction appliances, etc., etc. Now there is, I think, going to be a certain amount of competition between different forms of gearing, leaving aside for the present other forms than gearing—namely, belting, etc. There is going to be some divergence of opinion for some time to come as to which is the best form of gearing. Experiments have been made by very able persons on the subject, and so far nearly all of them concur in ascribing to the worm a much lower efficiency than to spur gearing. I have in mind some experiments which were made under the auspices of Messrs. Sellers, of Philadelphia, in which they sought to go to the bottom of the problem thoroughly and to arrive at some conclusion as to the relative efficiencies of the various forms of gearing. The results attained, showed first that the efficiency did increase with the speed, as Mr. Reckenzaun has stated, but that this efficiency did not increase indefinitely with the speed; that it reached a certain maximum, and a very curious circumstance was that the forms giving the highest efficiencies were those two direct ordinary spur gearings in which the shafts are parallel with each other. Starting from that, they made experiments in which the angle of the two shafts was gradually increased so that there was a gradual transition from the form in which the two shafts were parallel to that in which the two shafts were at right angles to each other as in the worm gear. We may say, in fact, that worm gearing and spur gearing are the two extreme forms, intermediate between the two extremes being placed the so-called helical gearing in which the teeth are placed at an angle in spirals. The results obtained by the Messrs. Sellers showed that the nearer they approached the form *of the worm* the lower was the efficiency. I have not in mind the figures of the efficiencies, but the experimenters themselves rather left us in doubt as to the value of their results by referring to very many circumstances which, in their opinion, would vitiate some of the results obtained, and there were certain conditions of the operation of their apparatus which they were not exactly satisfied with. I must say that I have always looked upon the worm with more or less suspicion. While I was not predisposed against it, particularly after seeing the beautiful results obtained with it by Mr. Reckenzaun, in England, yet I felt that it was to be taken under probation. There are some disadvantages, I think, which are connected with the use of the worm, and one of them which occurs to my mind just now, is the difficulty when the worm is fastened to the motor shaft in running down hill. When an electrically propelled car runs down a grade it is found possible to shut off the current in a great many instances, and this, of course, results in a certain saving of energy. Now, unless the pitch and the general design of the thread be properly adjusted, it seems to me that it would be somewhat difficult for a car to move down hill with ease, because of the well-known difficulty of moving such an arrangement backward. It is very well known that a thread can be used to turn a toothed wheel, but it is very hard to turn the thread by means of the toothed wheel. I understand that Mr. Reckenzaun has met this difficulty, though I do not know whether he still considers it one of the things to be remedied, or whether he deems the remedy that he has proposed sufficient.

Now, turning back to the other form of transmission, namely, the pinion, which I have said is likely to be one of the opponents or rivals of the worm system, I have in mind some form of that kind which I saw in use a year or so ago, which it seemed to me was very well adapted for the purpose. Recognizing the fact, of course, of a great tendency to wear in the pinion or in the gear wheel, and also the great tendency to the production of noise, a special form of pinion had been devised. This was made by taking a number of thicknesses of raw hide, and closely packing them and threading them on the shaft with knots to hold them in place; then cutting a thread so as to make a pinion of these thicknesses of raw hide. The gear wheel, I understand, was of phosphor-bronze. I made some experiments with that system—the Bentley-Knight—at Providence at the shops of the Rhode Island Locomotive Works. I found the working of it to be satisfactory. It was entireley noiseless and the only doubt that there was in my mind as to its success was the question of durability of the pinion. I have no doubt that if there is any wear it must necessarily come on the pinion, that being the softer substance of the two; but I have no data by which I could arrive at the comparative durability of the raw hide pinion.

With regard to the chain, I may say that my experience with it goes to show that the loss from its use is not nearly so great as might at first be supposed. In that respect the pinion is placed in very nearly the same position that the worm gearing is. In other words, it depends largely on who is using it and how it is used. Mr. Reckenzaun has obtained excellent results—nobody will deny that—with the worm gearing, which has always been looked upon as the bane of the mechanic. Now, the same may be stated with regard to the chain belt. It is capable of giving excellent results, but in order to obtain them, a special form of chain must be used and the secret of the success which Mr. Van Depoele has achieved in this country is due largely to the special form of chain which he has used. The connecting piece between the links has a thimble around it which acts as a roller, so that instead of having a frictional action on a toothed wheel, it has more of a rolling action, and by taking care to keep the chain properly lubricated, not only is the noise greatly reduced, but the loss from friction is also very largely diminished.

Mr. Reckenzaun—I think there is only one point which requires observation on my part and that is in regard to running down hill with worm gearing. I make the angle of the thread so that the car runs down hill very easily if we once start the worm. You can with your hands turn around the worm wheel almost at any speed you like and I know from experience a car which is provided with worm gearing will run down an incline of one in seventy to one in a hundred—it depends on the roughness of the track—very easily. If it were not for that, if the pitch or the angle of the worm thread were not sufficiently great there would be more danger even in the case of running on the level road than running down hill, because as soon as you cut off the current from the motor the momentum of the car would strip off all the teeth of the wheel. If you make that angle

Digitized by Google

sufficiently large you will find there is no trouble at all with reference to the point to which Mr. Mailloux has called attention. If you take the formula which I have given on the black-board, and which I suppose will be published some day, and if you take the dimensions I have put down you will find the exact angle of the worm thread, and you will find that its angle of repose is so low that the worm wheel is bound to revolve with the greatest of ease.

As regards spur gearing I have pointed out in the course of my observations in the paper that I have been very well satisfied, in fact, astonished with the ease with which that spur gear which we use in Philadelphia is working.

In respect to chain gearing, I have been rather unfortunate with it, but if I had employed such appliances as Mr. Mailloux or Mr. Van Depoele, no doubt I might have been more successful. Mr. Van Depoele uses rollers, and we know that rolling friction is much easier than what I call grinding friction where the links of the chain have to grind over the teeth.

I agree with Mr. Mailloux that there will be a great competition between the different forms of gearing, and it is only that form of gearing which lasts longest and gives the least trouble which will be eventually adopted generally. But at the present time we are still in the dark as to the best form. Everyone believes his own the best because he has had the greatest experience with it. Any discussion of the description we have had to-night will greatly advance the subject.

Mr. Wheeler—I want to ask Mr. Reckenzaun how the gear was connected to the motor? If the motor was mounted directly on the shaft, did not the jarring of the car shake the motor up a good deal and prevent the brush resting on the commutator? I do not think he has explained that.

Mr. Reckenzaun—No, sir, I have not explained that. The worm and its couplings are generally forged in one piece. I employ a slightly flexible coupling, and between the bearings are springs, which take off the jarring from the bed of the motor. There is very little jarring going on—comparatively little, and we have never had any trouble with the jumping off of the brushes from the commutator. If the springs on the commutator brushes are sufficiently strong there will be no trouble. In some cases I have tried—taking the brushes of the commutator to be almost horizontal—I have tried to put a counter-balance on the brushes so that the jarring, instead of shaking the brush off, jars it on or puts pressure upon it. I found at last that there was no necessity for such balances. There is very little trouble in that respect if all is properly adjusted in the first place. With the coupling flexible in the first place and the wheel flexible to the bearings that support the frame of the commutator you will find very little trouble on the points Mr. Wheeler has mentioned.

Mr. Wheeler—If the motor jars up and down at all it either must twist on the foundation or else there would be a fault in the shaft. That is to say, the shaft would either have to go one way or the other.

Mr. Reckenzaun—Yes, there will be a slight fault in the shaft; but if there is a flexible coupling it will compensate for that. Of course, we do not expect it will be at fault half an inch at any time, but it will allow a variation of an eighth of an inch.

Mr. Mailloux—I would like to call attention to another point. I do not wish to see it passed by, because I think it is of some importance and perhaps throws light on these discrepancies relative to the efficiency of the worm which have been observed in the results of the best experimenters. I have reference to end-thrust in the motor. My own study of the theory and practice of the worm wheel has convinced me that at least a large proportion of the waste of energy due to friction in worm gearing must have been due to end-thrust. Now, the question arises why did not Mr. Reckenzaun employ means by which this end-thrust could be reduced, if not eliminated, and in that way obtain a much better efficiency than the others who had preceded him? I wanted to mention particularly that in analyzing the experiments made by Messrs. Sellers I was not satisfied with the precautions that they seemed to have taken to eliminate that end-thrust, and perhaps that may have been the cause of considerable loss of energy by friction.

Now, there is another point which occurs to me and which I will beg the privilege to discuss while I am up. The problem of electrical traction involves a very important requirement in the matter of securing adhesion between the rails and the wheels in climbing up grades, going around curves, &c. The electric motor has not been found successful in enabling us to climb grades higher than 6 per cent., or at the outside 7 per cent. I have succeeded in going up a grade of 6 per cent, with a car having another car attached to it. But these are *tours de force*, so to speak, which, perhaps, we would not care to repeat every day. Then if we admit the necessity for a certain amount of traction—adhesion between the motor and the car, we arrive at the consideration of the importance of having the power transmitted to both axles. In a great many cases I have found that the transmission of the motion to one axle was insufficient in certain kinds of weather when the tracks were not in the right condition. There would be a very severe and annoying amount of slipping which would greatly interfere with the progress of the car and the success of the experiment.

Now, another requirement which has presented itself in my study of the problem is this—the difficulty of starting easily, smoothly, and without hesitation. That is a more important item of the problem than people generally imagine, and I have in mind several systems of electrical traction which are successful in almost every respect but that. They start with a certain jump which is likely to strain, if not to rupture, some part of the mechanism of transmission, and in connection with this it has suggested itself to my mind as being an eminently desirable end to attain to have means by which the motor could be started independently of the car. There is a certain amount of inertia to overcome in the motor itself and a certain amount of energy must be expended in giving it the velocity at which it is to be run. Now, if we could do that first and not have to do it at once or simultaneously with the overcoming of the inertia of the car itself you will see that we will have made some gain. It would be very much like dividing a load into two portions instead of having to lift it all at once, lifting a small part of it and then going on to lift the rest. That suggests itself to me as an important matter, and I believe that the successful system will be one in which that feature is present. I would like to hear the opinion of Mr. Reckenzaun.

Mr. Reckenzaun—With regard to eliminating the end-thrust of the motor in the case of worm gearing, I use no special precautions whatever excepting that I employ several thrust collars. I believe Mr. John Pendleton has a system of worm gearing in which the thrust is eliminated by having two worms, one right-handed worm and the other a left-handed worm, so that the thrust of the one counteracts the thrust of the other. But it has this little disadvantage that the gearing comes very near to the ground. There are two worm wheels and the motor shaft is at a tangent to the two wheels, and the motor is between. By this means the two driving wheels have to revolve in the same direction. The two worms revolve in the same direction, and being right and left-handed the thrust is entirely eliminated. I have made one kind of worm gearing for a special purpose where two worms were attached to a motor which drove two worm wheels, and on the same shaft with the worm wheels were two large spur wheels which were used for climbing up a rack. In this case also the thrust was eliminated, so that there was only the friction of the thread of the worm and the worm wheel teeth.

With regard to the problem of adhesion it is perfectly natural that the more driving wheels you have the better will be your adhesion because each wheel will have the same effect in assisting to start the car. I never use less than four driving wheels on my cars. I would use six if it was convenient.

Mr. Mailloux—How do you connect them, Mr. Reckenzaun?

Mr. Reckenzaun—I use two small trucks and two motors. There are four driving wheels and two driving axles. By extending the shaft we could have a second worm wheel; but that would complicate matters very much unless it was absolutely necessary for very steep grades.

It is nonsense to attempt to run cars on a grade of more than six per cent. in wet weather. It is impossible. No electric car or steam car or any self-propelled vehicle will with absolute certainty climb grades of more than six per cent. in slippery weather. If we go beyond six per cent. we must have some artificial adhesion; we must introduce some rack on the road, or cables which have a positive motion. Any one who attempts to guarantee a self-propelled vehicle whether propelled by steam or any other means on grades of more than seven per cent. will most certainly lose his reputation.

With reference to starting I have always found that electric cars start with remarkably facility; that is to say with remarkable quietness. There is very little jerk. Mr. Mailloux mentions that most electric cars start with a jerk, I know that steam cars, cable cars and horse cars start with a jerk, but I have very seldom found it on electric cars, and I have had the privilege of riding on a good many electric cars in various parts of the world. There is a gentleman here, Mr. Stein, who I think might give an opinion on that subject. He has been on our car in Philadelphia, and I think he would say how easily it starts. You can hardly feel the starting; it starts gradually, and that is perfectly natural. When the current is transmitted to the motor, the motor has no counter-electromotive force. Therefore the whole of the current that goes through is determined by the actual wire resistance of the motor. As soon as the motor is started, as soon as the armature revolves the current decreases, immediately, in proportion to the relative speed of the armature. As the counter-electromotive force is created in the armature by its revolution so the current is reduced, and it is almost impossible to start an electric car suddenly with a great jerk.

I think those are the main points Mr. Mailloux touched upon.

Mr. Pendleton—In regard to the electrical propulsion of cars, while the first efforts were being made in Paris by Mr. Philipart, in the celebrated omnibus feat, with which he paralyzed the residents of Paris, by the exhibitions made on the Boulevard, and also the run from Paris to Versailles and return, my attention was

Digitized by Google

drawn to the question of power contained in the accumulator for the purpose of car propulsion; and while an examination of that apparatus failed to satisfy me as to its being a mechanical arrangement affording the best efficiency, yet the results attained in that demonstration convinced me that the value of the accumulator and motor would find a better application in the replacing of horses than in anything else, and as I was devoting my attention to experiments with the accumulator during those years, I gave a good deal of study to improving the mechanical devices then adopted, which were simply to put in a D2 Siemens dynamo connected to the counter-shaft and from the counter-shaft connecting to the wheels of the omnibus which was borrowed for the purpose, and my recollection is that the apparatus weighed about nine tons. We are all familiar with the demonstration made and a good many are familiar with the devices used, but when I made the attempt to find something better it appeared that according to the experience of car men, and in the opinion of those who had employed various devices with compressed air or steam, it was a very difficult subject. Our oldest car builders in conversation told me that the experiments had so far demonstrated that horses were the best things to put on cars and nothing else would do; that engines would not stand the pounding of the rail. They were very rapidly destroyed. Occasionally some invention would run smoothly for awhile, but that inevitably it came to grief in a very short period. Notwithstanding this discouragement, various devices such as have been spoken of to-night were reviewed one after the other, and the device which Mr. Reckenzaun has alluded to was the final result after discarding some dozen or more. But the necessity of using the worm and worm-wheel running in oil was very evident to my mind. It may be remembered by a good many here that in May, 1886, I exhibited at the New York Electrical Society, a design for this system of car traction, having eliminated from it all the objectionable features, so far as could be well done on paper. I exhibited it for the purpose of getting the opinion of those who were engaged with me in investigating mechanical and electrical questions. I was discouraged afterwards by the opinion of many—some of whom are here present—as to the efficiency of the worm and the worm-wheel, and it is with the greatest pleasure that I hear so well defined and so thoroughly proved by practical experiments what I may say was a chance choice more than a scientific result on my part. It came to me intuitively as it were; it seemed to satisfy me better than any other. I have had the apparatus in model for a good many months past but other engagements have prevented my doing as much work in that line as I wished. The interest has increased from week to week. It is only a fortnight ago that I visited Philadelphia, and had the opportunity of riding upon a car which Mr. Reckenzaun had in charge at the corner of Washington avenue and Twenty-fourth street. I saw there a car under thorough control, mounting grades of five feet in 100 easily, stopping in the centre of the grade and starting without any difficulty. The starting from a dead stop was with ease—much more than we would experience in a horse car—and although I had been so many years a believer and exponent of electric traction, and particularly of accumulator traction, for street cars, I will state to you that I was surprised and gratified at the practical demonstration of its value that I saw. The car was run by a motor attached only to to one pair of wheels. It had always been a great doubt with me whether on grades of five to the hundred or four to the hundred a car would have sufficient bite upon the rail to enable it to mount grades of that degree. I saw the car stop on a grade, start on a grade without any slip and go over it and I felt that a very important question was solved by the manner in which it performed its work. Gentlemen, there is no doubt in my mind to-day in regard to the value of electrical propulsion or of accumulators acting in replacing horses. After the demonstrations that have been made it is only a matter of a few months when we will find one or two lines of horse cars in this city adopting the electrical propulsion, and then you may expect it to come like the roll of the sea. There will be no supplying the demand that will arise for electrical cars. I had the pleasure that day I was in Philadelphia, of being associated with two presidents of horse railways who were witnessing the experiments and they both expressed their surprise and delight at the behavior of the car and of the thorough control which it was under. We have but a brief period to wait before we shall find the advantages which the adoption of a new and better system will give to the general public and to the welfare of our cities.

The President—There is one branch of the subject which has not been touched upon this evening, yet it merits our attention. We have so far confined the discussion to street cars, whereas this whole discussion might refer more largely to electrical cars in general. It may not be within your knowledge generally that within the last month or two an electrical road, the largest of the kind in this country, has been put in operation in the coal mines of Pennsylvania. We have with us this evening Mr. Schlessinger, who has put that road in operation and who has it successfully running to-day. He there handles trains of many tons weight, and his experience in dealing with the particular question that was touched upon of moving off easily and quickly without any jarring of the machinery would be very valuable in this connection. I think it would afford us all a good deal of pleasure to hear of his experience in the Lykens Valley coal mines.

Mr. Schlessinger—In the Lykens Valley coal mines we entered into competition with one or two lines of horses and also with the steam engine. The mules were taken off the second day entirely, and I think that the steam engine has seen its last days also in those coal mines. It is proposed wherever steam locomotives are being used to change them for electric motors in a very short period. The trains we have to handle are sometimes as large as 100 tons. We have to take them over grades of about one per cent. to two per cent. and around 90 degree curves, one of them being 25 feet radius. We have got to start trains on these curves. The mode of transmitting the power from the motor to the wheel is chain gearing. I found that wherever the train stands the starting is very easy or would be very easy if it were not for the fact that the cars generally are bumped together, and the load is not put all at once on the motor but gradually. One car starts after the other, and this is an objectionable feature so far as the easy starting is concerned. If the whole train would start as one then it would move off very nicely and easily without any jar at all, and that is another reason why I think it is always preferable to have the motor geared in such a manner to the car that both start together, not the motor first and then the car. There will always be a jar if this is not the case. It is the same thing as if the chain gearing should have stretched; it will always be noticeable that the car starts far more heavily and with a greater jerk than if the chains are perfectly tight. Outside of that the weight and power required to start the motor are so small as compared with the power required to start the whole thing that there is very little gained in starting one, especially the motor, before the other. The chains we are using in the Lykens Valley coal mines are the chains Mr. Van Depoele is using, and side by side with them a chain that I have specially constructed for the purpose. The links are made of phosphor-bronze and the pins are steel having a wearing surface of two square inches. The chain with a thimble is not giving much satisfaction up there. I suppose it is because of the very heavy strain on it.

Capt. O. E. Michaelis—A remark that Mr. Schlessinger has just made in regard to the increased shock due to the successive movement of the cars constituting the train brings to my mind a remark that the reader of the evening also made in his paper, which I saw was clearly founded on experiments and not simply the result of theory. That remark was that the duty upon the motor was greater in starting the train than afterwards, and Mr. Mailloux continued somewhat in the same manner. Now, during the present year there was a series of remarkable experiments made at Burlington, Iowa, under the auspices of the Master Car Builders' Association, which will bring about, I think, an entire revolution in the method of connecting trains, and I am fain to confess that these experiments appear to upset all our pre-conceived theories as to the duty of the motor in starting trains. I speak on the subject because I am at present engaged on this coupler question and therefore take some interest in it. These experiments showed that the greatest duty upon the locomotive in this case was actually after the whole train had been started, and it is very curious. I am willing to admit that I was entirely mistaken myself, because at the very time almost of my receiving the account of these experiments I had taken great pains to explain to a friend of mine the theory by which a train was moved by the successive picking up of the cars, a theory which was of course upset by these experiments. The result has been that the Coupler Committee of the Master Car Builders' Association—all prominent railroad men in active practice—unanimously agreed at the convention in Minneapolis, that the future coupling of cars shall be tight and not loose, and have recommended the abolition of the pin and link coupler and the substitution of a close vertical hook, which coincides, I think, with what Mr. Schlessinger has said.

Mr. Mailloux—I stated that one of the difficulties was the sudden starting of electric cars. Now, I should have said that circumstances were responsible for that. It depends very much on the way in which the energy is given to the car, and when you are dealing with accumulators it is not often possible to apply the electrical current to the car in a manner sufficiently gradual and slow to prevent that sudden onslaught of motion, so to speak. That is what I had in mind in speaking of the sudden motion. If the current is supplied over circuits with devices by which it can be put on more slowly or more rapidly according to circumstances the case is different, but with storage batteries generally it is far more convenient to have as few combinations as possible, as little mechanism in the regulating apparatus, so as not to complicate things. Now, with regard to the starting of the motor shaft first the opinion I expressed was the result of experiments. I have seen the value of that point demonstrated quite recently by means of a system in which the motor is started first giving free scope to the full electromotive force of the battery and allowing it to run at a very high speed and accumulate energy in the form of momentum, so that not only that part of the work has been done but we have even stored a certain amount of energy there which when a device is applied shall enable us to make use of that stored energy to start the car itself. I have seen the results demonstrated by a gentleman who has a system of traction, and I must say that it

Digitized by Google

struck me very favorably indeed. He used a frictional device in the connection between the motor and the driving wheels, also combined with spur gearing, but when I saw the ease with which he started and stopped and overcame grades, &c., I was convinced there must be something in it.

Mr. Pendleton—I called Mr. Mailloux's attention to the value of the electric motor, particularly for the purposes which we are now discussing; and that the electric engine has its greatest traction at the time of starting and, therefore, is more particularly valuable for the purposes of car traction than any other engine we know of, and in order to get this momentum of a small armature for the purpose of moving a heavy car it would only invariably bring about the result of a jerk which we have none of us noticed so far in the actual tests and experiments made. I have noticed particularly in regard to the cable cars that it is very disagreeable for obvious reasons; but where we are using a 10 h. p. motor weighing 700 or 800 pounds for the purpose, and the armature of which is but a fraction of the weight, the momentum there can amount to very little in a car weighing six tons.

Mr. Mailloux—It is very apparent that when a motor is permitted to run very fast its counter-electromotive force approximates very closely to its source of energy. Consequently the current is very little from it If you put on a force like a brake that tends to slacken that motor and to gradually couple it with the driving axle you will have a variable velocity ratio between the two, which ratio is gradually approaching unity. As you put on a greater and greater effort you are slacking the motion of the armature and getting the benefit of its momentum, while at the same time the current is increasing through it, and in that way you have the most gradual putting on of the current that you can hope for. I have seen the experiment made so many times that I for my part do not doubt it any more.

The President—There being no further discussion I will ask Mr. Reckenzaun to make such closing remarks as may occur to him.

Mr. Reckenzaun—I was merely going to reply to Mr. Mailloux. On the very first car which I constructed in 1882, which was worked by storage batteries, I used the momentum not only of the armature of the motor but also the momentum of a fly wheel which weighed between three and four hundred-weight. I put the fly wheel upon the counter-shaft and I used that gearing which I have described to-night—that peculiar gearing with the discs and a wedge shaped band. I employed the friction clutch. I thought that by starting the motor to its full speed, and with a heavy fly-wheel, that it would be a great advantage in the starting of the car, but I was greatly disappointed. The car started with a jerk, and when I did away with the fly-wheel I found that the car started with the greatest of ease, and I believe from actual experience which I have had in this direction that it is far better to start without the momentum of the armature or the momentum of any fly-wheel connected with the armature. It is perfectly natural that an electric motor must start gradually. Take the motor off the car altogether and put it upon a table and send through it any current from any battery you like or from any source of energy you like—fifty volts, one hundred volts, or five hundred volts—and you will find that the armature cannot start suddenly. It must take a few seconds to take up its speed, and, therefore, it is perfectly natural that a car propelled by electric energy must start gradually. It is a perfectly natural consequence.

Our worthy chairman has requested me to make some concluding remarks, but the time is getting very late, and I believe gentlemen will be very glad to get off. I have nothing more to say. I have been exceedingly interested in the various remarks which have been made to-night, and I must own that I have learned a great deal. With regard to the general application of electricity to street car propulsion, as Mr. Pendleton has pointed out very forcibly, there is a very great future in store for us, and the time is very near when horses on street cars will be entirely abandoned. We have, I might say, almost passed the experimental stage, and we are now entering the more profitable stage of manufacturing and supplying street railways with electric motors. The advantages in electric motors are not only economy but cleanliness and great saving of space at the depots, and great saving of space in the streets. If you take crowded streets like Broadway, New York, and many other thoroughfares where every square inch of space, you might say, is of value, if you do away with horses you save in length about twelve feet, and in width, of course, the width of the track. Now, it would seem ridiculous for me to make such a remark, but if there are hundreds of cars running in a crowded street it makes many thousand square feet of space saved, and in that space other vehicles can pass. Another great advantage in electrical propulsion will be (apart from economy, which is certain to be a result) that we shall be able to travel at a greater speed. Horses cannot pull a car at a greater speed than six miles an hour. The average speed of all the horse cars in America and Europe is five miles an hour including stoppages. Now, if we can travel at the rate of eight or ten miles an hour a great deal of time will be saved and passengers will avail themselves more of the new mode of traction. They will save a great deal of time. The traffic is constantly increasing. I have heard recently that the street car traffic of New York alone has increased in the last ten years fifty per cent. If it increases in the next ten years again fifty per cent. it would be impossible to cope with the traffic if we employ horses at all. The elevated railroads it appears are doing a large amount of business—almost as much as they are capable of doing—and the only loophole, it seems to me, out of the difficulty is either by building underground railways or by propelling the street cars at a greater speed so that the same number of cars will carry double the number of passengers in the same time.

With these remarks, gentlemen, I close, and I thank you very much for your kind attention. (Applause.)

Mr. Wheeler—I move a vote of thanks to Mr. Reckenzaun for his interesting and instructive paper.

The motion was seconded by Mr. Wetzler and carried.

LIEUT. ZALINSKI'S PNEUMATIC DYNAMITE GUN.

On Tuesday, the 20th, in the presence of the secretary of the navy, the naval committee of the House of Representatives, and many representatives of the army and navy of this and other countries, an exhibition was given in New York bay of the destructive capabilities of the Zalinski pneumatic dynamite gun. The results of the tests made at the time prove conclusively, that, with the present experimental and necessarily imperfect gun, a shell containing 55 pounds of explosive gelatine may be thrown with accuracy a distance of one mile, and exploded at the proper moment for producing the maximum of destructive effect. The target used was a two-masted schooner "Silliman," 80 tons' burden, late of the United States coast survey, but recently condemned, and reserved to be used in torpedo experimenting. She was anchored 1,980 yards from Fort Lafayette, where the gun was stationed. After two trial-shots with blank cartridges, a loaded shell was fired, which struck the water a few yards short of the target. The explosion threw a column of water nearly a hundred feet into the air, and the concussion jarred the vessel so that the mainmast was broken off a few feet above the deck. The next shot struck the vessel at or below the water-line, with an instantaneously destructive result. The schooner was lifted up, fairly torn apart amidships, and the rails were under water in less than 30 seconds, only the foremast and its standing rigging being left in view. All around this floated small fragments of the schooner. In each of these instances the gelatine was exploded by percussion in this way: a small electric battery was affixed to the side, the only thing lacking to start its operation being moisture. A thin piece of blotting-paper kept this out. When the shell was immersed, the moisture admitted generated sufficient electricity to fire a detonator of fulminate of mercury, which exploded the gelatine.—*Science.*

SYMPTOMS OF FURTHER LITIGATION OVER ALTERNATE CURRENT DISTRIBUTION.

The following correspondence between the Westinghouse Electric Co. and the United States Electric Lighting Co., in relation to the United States company's proposed use of the alternating system of electrical distribution has been made public.

July 27th, 1887.

THOMAS B. KERR, ESQ.

Dear Sir: We enclose herewith a copy of a letter written to-day by THE UNITED STATES ELECTRIC LIGHTING CO. to THE WESTINGHOUSE ELECTRIC CO. We assume that you will of course represent THE WESTINGHOUSE COMPANY in this matter and if you decide to commence a suit, we are authorized to appear for THE UNITED STATES CO. and will accept short order of process. We will also give you a stipulation admitting the construction of the apparatus made by our clients and facilitate a speedy trial of the suit in every way we can.

The apparatus referred to consists substantially of a dynamo machine generating an alternating current of high tension, and induction coils at the point of consumption for converting it into currents of lower tension to be used for incandescent lighting. The primaries of the induction coils are connected in multiple arc with the circuit from the dynamo. Incandescent lamps are connected in multiple arc with the secondary coils, which are shorter and thicker than the primaries so as to make the secondary currents of lower tension than the primary. Both coils are wound on the same iron core. This will, we think, enable your clients to decide whether they consider this apparatus to be covered by the patents referred to in their advertisements, but should you require any further information in this regard, we shall be pleased to give it to you.

We think it proper to say that in case you do not bring a suit at present, we shall feel at liberty to make use of this correspondence in any subsequent litigation against our clients on the patents referred to.

Yours, very respectfully,

DUNCAN, CURTIS & PAGE.

NEW YORK, July 27th, 1887.

THE WESTINGHOUSE ELECTRIC CO.,
Pittsburgh, Pa.

Dear Sir: Our attention has been called to your advertisement on page xiv of the *Electrician and Electrical Engineer* for June, 1887, in which you assert that you are the owners of patents that cover broadly, "the distribution of high tension alternating currents and their reconversion to low tension currents for incandescent lighting and running of motors," and in which you plainly indicate your intention of bringing suit against other persons found using this system of distributing electric currents for the purposes indicated.

While it is our settled policy to respect the rights of others as secured by valid patents, we deem it proper to notify you that we do not admit your right to maintain any claim of the character indicated in your advertisement.

Digitized by Google

We also take this occasion to notify you that we are engaged in the manufacture and sale of electric light apparatus in which alternating currents of high tension are converted by inductive action at the points of consumption into currents of low tension for incandescent lighting; and, in order to prevent future misunderstanding, and to secure a speedy determination of our rights in regard to such apparatus, as against the claim which you set up in your advertisement, we are ready to respond at short notice to any suit that you may be pleased to bring against us on the patents on which you base your claim. In case such a suit is brought, it will afford us pleasure to give you a more detailed description of our apparatus, and we promise to do whatever else can reasonably be asked to facilitate a trial and obtain a prompt adjudication of our relative rights.

In view of the peculiar character of the claims that you assert, we think it proper to say that our object is to secure to ourselves an early opportunity of contesting such claims in a suit for the proper defense of which we can be held responsible, and to prevent any possible prejudice to our interests by the outcome of any suit brought by you against other parties.

Yours respectfully,

THE UNITED STATES ELECTRIC LIGHTING CO.
BY G. W. HEBARD, *President.*

PITTSBURGH, July 29th, 1887.

MESSRS. DUNCAN, CURTIS & PAGE,
120 Broadway, New York.

Dear Sirs: Your favor of 29th inst. enclosing the copy of a letter of that date, written by THE UNITED STATES ELECTRIC LIGHTING CO. to THE WESTINGHOUSE ELECTRIC CO., came duly to hand.

I cannot have a consultation with Mr. Westinghouse in regard to the matter until the latter part of next week, and so I will not attempt to reply fully at the present time. I will, however, say, that we have been informed that THE UNITED STATES ELECTRIC LIGHTING CO. were preparing to enter into the manufacture and sale of alternating current plants, and that I have instructions to bring suit against it as soon as any definite case of infringement was brought to our notice.

I will further add, that the apparatus described by you is, in my opinion, a clear infringement of our Gaulard and Gibbs patent, number 351,589. As soon as I can have a consultation with Mr. Westinghouse, I will send a suitable reply, but it may as well be clearly understood by your client, that its threatened infringement of the rights of THE WESTINGHOUSE ELECTRIC CO. to the alternating system will not be tolerated an instant, and will be resisted by the use of all legal measures at our command. The course adopted by your client in regard to this matter, and its abandonment of the system of electrical distribution which it has always heretofore used, in order to adopt the alternating system which we have not only patented, but actually created in this country, is hardly to be justified by the labored and unusual notice which you have favored me with.

Very respectfully,

THOMAS B. KERR,
Attorney for the Westinghouse Electric Co.

PITTSBURGH, August 8th, 1887.

THE UNITED STATES ELECTRIC LIGHTING CO.
120 Broadway, New York.

Dear Sirs: Your letter of July 27th, * * * * came duly to hand.

You do not and cannot deny that the use of the apparatus you are making is covered by our patents, and that your manufacture and sale of it will expose your customers to the liability of a suit by us. Your letter is, therefore, an admission of infringement of our rights, while your action in abandoning the system of distribution which you have heretofore used, for the wholly different system of distribution which we have patented and introduced into use in this country, although an unqualified admission of its merit, is regarded by us as a flagrant disregard of our rights and without warrant on your part.

Your notice would have more of real candor and fairness if it had been given at the time when you first decided to embark on your course of infringement, instead of after a secret and systematic preparation, whereby you are enabled to say that you are now engaged in the business.

We do not concede that you have any rights in the matter, as it is well known and universally admitted that Gaulard and Gibbs, the patentees of our Letters Patent No. 351,589, first introduced and demonstrated the utility and commercial value of their alternating system by the erection of working plants in England in 1883, in the face of the ridicule and opposition of all existing electric lighting interests.

After a thorough investigation into the merits of the system, and after fully satisfying ourselves of the rights of the inventors, we purchased their interests in this country, and since that time have introduced the system extensively here in a field which had not been successfully and profitably occupied by you or any other company; and now, after we have thoroughly demonstrated its value and importance, you propose to abandon your former practice and to benefit yourselves by the unlawful appropriation of our invention. We do not propose to submit to such a course on your part without making use of every lawful means at our command to vindicate our rights. We will, therefore, be obliged to you if you will give us a detailed description of the apparatus you are making and selling, as you have kindly offered to do, together with such other information as may be necessary for the bringing of a suit or suits for the infringement of any of our numerous patents which we may find embodied therein. When we have this information we will accommodate you with one or more suits, as the facts may warrant.

We deem it proper to notify you that in addition to the patents which we have already obtained, we have a large number of applications for patents now pending in the Patent Office, covering important details of the apparatus, some of which will possibly be used by you in your attempted utilization of our system. If such should prove to be the case, your customers will be called to account for using them as soon as we obtain the patents.

In conclusion, we would ask you to contrast your deliberate invasion of our rights in this matter with our conduct in reference to your three wire patent, when, without question and at considerable expense and trouble, we changed several plants rather than have the appearance of infringing upon your rights.

Respectfully,

THE WESTINGHOUSE ELECTRIC CO.
GEO. WESTINGHOUSE, *President*

NEW YORK, August 17th, 1887.

THE WESTINGHOUSE ELECTRIC CO.,
Pittsburgh, Pa.

Dear Sirs: We have yours of the 8th inst. Our letter of July 27th, was not, like yours, written to influence public opinion, or to cover up any facts. Our purpose in writing it was, as we frankly stated, to facilitate an early decision by the Courts of certain questions in dispute between us, after a full investigation of the controversy, and to avoid any prejudice to our rights from suits you might bring against other parties. We assumed that you would be at least as anxious as we were for an early adjudication of our respective rights, and we are therefore surprised that instead of frankly accepting the opportunity we offered, you should so entirely misconstrue our letter and adopt so violent and discourteous a tone in your reply.

We are also surprised, in view of the sweeping assertions of your advertisement, that you should require further information before deciding whether you will bring a suit or not, and particularly in view of the reply of your Mr. Kerr, under date of July 29th, to a letter from our counsel describing somewhat more fully than we did the apparatus we are making, in which he says: "I will further add that the apparatus described by you, is, in my opinion, a clear infringement of our Gaulard and Gibbs patent, No. 351,589."

Should you still, however, be unable to decide without further information whether to bring the suit, we shall be pleased to allow you to examine our apparatus.

While we prefer to try such controversies in the courts rather than to attempt to discuss them by correspondence, there are certain statements contained in your letter which we can hardly pass over in silence without risk of misapprehension in regard to our position.

We do deny that the use of the apparatus we are making is covered by your patents, although we frankly admit that it is covered by the claims you make in your advertisements. So far as we have knowledge of your patents, we do not believe that you will seriously make any claim of infringement except with respect to the Gaulard & Gibbs patent above referred to, and we are advised by our counsel that our apparatus is not covered by any proper construction of this patent, such as would be sustained by the courts.

We have no means of knowing what applications you have in the Patent Office, but if it turns out that we are using anything which you can fairly claim as your property, we shall pursue the course you did when you became convinced of the justice of our position in the suit on the three wire patent, and cease using it at once. You must not expect us, however, to acquiesce in any attempt such as we believe you are making with reference to the Gaulard & Gibbs patent, to appropriate what has so long been public property.

We are wholly unable to see where you found your assumption that we have abandoned the system of distribution we have heretofore used. We have not abandoned, and we have no intention of abandoning, either of the systems we have been using, but shall continue to use them largely.

Your reference to our "secret and systematic preparation" for introducing the system referred to in our letter, seems to us, to say the least, hardly ingenuous. Although our preparation has been systematic, there has been nothing secret about it, as you well know. Several months since, we informed you that we were preparing to introduce such a system, and, if we are not mistaken, your counsel were fully apprised of our intention in that regard some months before that time.

We cannot agree with you in regard to the value of Gaulard & Gibbs' system or their experiments to which you refer. On the contrary, it is generally conceded, as we understand, that the system devised by Gaulard & Gibbs, and used in the experiments referred to is wholly impracticable for commercial use. It has, as we understand, been abandoned by you for a radically different system, and is not, so far as we can ascertain, in commercial use anywhere at the present time. We certainly have no intention or desire to use it.

Nor can we suppose you seriously think that we have no rights in the matter After a very careful investigation of the subject we ascertained that the fundamental features of the system of distribution by means of induction coils or transformers were invented by Mr. Paul Jablochkoff. As you are well aware, we have purchased his invention for this country, and the Patent Office has already decided in an interference proceeding between Jablochkoff and Gaulard & Gibbs that Jablochkoff was the prior inventor.

The liability incurred by our customers from using our apparatus, to which repeated reference is made in your letter, need cause you no uneasiness. It will not, we feel sure, disturb them. We are abundantly able to protect them and shall certainly do so.

In conclusion we think it proper to say, not by way of threat, but merely to avoid any possible misapprehension in regard to our position, that we also have numerous patents and pending applications covering important inventions. We have reason to believe that you are using several of these inventions in the apparatus you are making, and we shall in due time, take proper steps for enforcing our rights.

Yours, very respectfully,

THE UNITED STATES ELECTRIC LIGHTING CO
BY G. W. HEBARD *President.*

NEW YORK, Sept. 19th, 1887.

THE UNITED STATES ELECTRIC LIGHTING CO.,

Dear Sirs: The report of Messrs. Byllesby and Shallenberger, of our company, of their inspection of your alternating current apparatus, which was kindly shown them at your shops by your Mr. Curtis, is to the effect that at present you are not in position to do business in that line, or in other words that your devices and arrangements are not of a character to operate commercially without radical change. We are not informed that you have any alternating current plant in operation. It would therefore seem that your notice to us its premature, and that, as you are not at present, so far as we can ascertain, injuring us by illegal competition, a suit for infringement would be entirely out of place. While we do not care to waste time and money in useless suits, we will defend our rights by all legal means in case you should hereafter actually invade them.

Yours respectfully,

GEO. WESTINGHOUSE, Jr., *President.*

THE TELEPHONE IN GERMANY.

The use of the telephone in Berlin is rapidly extending. At the beginning of last month, the number of subscribers was 6,262, and there were seven exchangers in the town and 21 in the neighborhood. The postal authorities have some difficulty in keeping pace with the public requirements as regard the telephone service. At the present moment there are 1,000 applications lodged at the office, and new applications are coming in at the rate of 150 per month. The total number of separate circuits is about 10,000, of which 8,000 are above ground. The placing of wires underground is being opposed by the town council, who object to the frequent disturbance of the pavement, and are endeavoring to levy from the post office a tax for the use of the streets in the same way as they levy a tax from the electric lighting companies who use the streets. Generally the town authorities raise no objections to over-head wires, and are even disposed to consider them as an element of safety. It has been observed that during recent thunder storms those portions of the town which are most thickly covered with telephone wires enjoyed complete immunity from strokes of lightning, whereas damage was done in other districts. The explanation of this fact is that a large number of the posts supporting the telephone and telegraph wires have purposely been connected with earth, and these posts formed, together with the net work of wires, a fairly efficient protective system.

Digitized by Google

QUARTERLY REPORT
OF
THE WESTERN UNION TELEGRAPH COMPANY.
FOR THE QUARTER ENDING SEPTEMBER 30TH, 1887.

EXECUTIVE OFFICE,
WESTERN UNION TELEGRAPH COMPANY.

New York, September 14, 1887.

The following statement will show the condition of the Company at the close of the quarter ended June 30th, 1887:—

Surplus, April 1, 1887, as per last Quarterly Report..		$6,815,932.36
Net revenues, quarter ended June 30, 1887.....		1,100,782.03
		$7,916,714.39
From which deducting for—		
Dividend of 1 per cent. paid July 15, 1887..	$811,864.43	
Interest on bonded debt	122,664.85	
Sinking funds	20,000.00	
	$954,529.28	
Less—		
Portion of the sinking fund for the bonds of 1900 (which was set aside previously) returned to the Company by the sinking fund trustees, because of the drawn bonds not having been presented for redemption	40,000.00	$914,529.28
Left a surplus, July 1, 1887, of.		$7,002,185.11
The net revenues of the quarter ending September 30th, instant, based upon nearly completed returns for July, partial returns for August, and estimating the business for September, will be about .		$1,400,000.00
Add surplus, July 1st, as above.....		7,002,185.11
		$8,402,185.11
From which appropriating for—		
Interest on bonds.....	$122,500.00	
Sinking funds.....	20,000.00	$142,500.00
Leaves a balance of		$8,259,685.11
It requires for a dividend of 1 per cent. on the capital stock.....		812,000.00
Deducting which, leaves a surplus after paying dividend, of.....		$7,447,685.11

In view of the preceding statements, the committee recommend the adoption by the board of the following:

Resolved, that a dividend of one per cent. on the capital stock of this Company be hereby declared payable on and after the 15th day of October next, to stockholders of record at the close of the transfer books on the 20th of September, instant.

Resolved, that for the purpose of the Annual Meeting of Stockholders, to be held on Wednesday, the 12th of October next, and of the dividend hereinbefore declared, the stock books of the Company be closed at three o'clock on the afternoon of the 20th of September, instant, and be reopened on the morning of the 15th of October next.

Respectfully submitted,

NORVIN GREEN, *President.*

SUBMARINE CABLES.

The government of Formosa, at the end of last year, decided to connect this island with the mainland by means of a submarine cable, and asked for tenders for the carrying out of the work. Messrs. Jardine Matheson & Co., were the successful tenderers, and placed the orders for the manufacture of the cable and the fitting of the cable steamer with the Silvertown Company. The *Fee Chew* was built at Messrs. Doxford's yard, in Sunderland, and as well as being fitted with cable tanks and cable gear, she carries four guns of light calibre, and on account of her speed will be used, when not employed as a cable vessel, as a despatch boat. The cable will be laid under the superintendence of Mr. Joseph Rippon, assisted by Mr. Daley, both of the Silvertown Company's staff, and by Captain Lugar, who formerly commanded the cable steamer *Mackay Bennett*, and served for a considerable time in the repairing steamers of the West India nad Panama Telegraph Company.

ELECTRIC RAILWAYS IN AMERICA.

Now in Operation.

APPLETON, WIS.—Appleton Electric Street Railway; overhead conductor, 4½ miles, 5 motor cars. Van Depoele system.
ASBURY PARK, N. J.—Sea Shore Electric Railway; overhead conductors, 4 miles. Daft system.
BALTIMORE, MD.—Union Passenger Railway Co.; overhead conductor. Daft system.
BINGHAMTON, N. Y.—Washington Street and State Asylum Electric R. R.; overhead conductor, 5½ miles. Van Depoele system.
DENVER, COL.—Denver Tramway Co.; conduit, 4 miles. Short-Nesmith series system.
DETROIT, MICH.—Detroit Electric Railway Co.; overhead conductor, 2 miles, 4 motor cars. Van Depoele system. Highland Park Railway Co.; overhead conductors, 3 miles, 2 motor cars.
GRATIOT, MICH.—Gratiot Electric Railway Co.; overhead conductor, 1 motor car. Van Depoele system.
KANSAS CITY, MO.—Kansas City Electric Railway Co. Henry system.
LIMA, O.—Lima Street Railway Motor and Power Co.; overhead conductor, 6½ miles, 7 motor cars. Van Depoele system.
LOS ANGELES, CAL.—Los Angeles Electric Railway Co.; overhead conductor, 5 miles, 4 motor cars. Daft system.
MANSFIELD, O.—Overhead conductors. Daft system.
MONTGOMERY, ALA.—Capital City Electric Street Railway Co.; overhead conductor, 11 miles, 20 motor cars. Van Depoele system.
PORT HURON, MICH.—Port Huron Electric Railway Co.; overhead conductors, 2¾ miles, 3 motor cars. Van Depoele system.
SCRANTON, PA.—Scranton Suburban Railway Co.; overhead conductor, 2¼ miles, 3 motor cars. Van Depoele system.
WICHITA, KAN.—Wichita, Riverside and Suburban R. R. Co.; overhead conductor, 4 miles, 6 motor cars.
WINDSOR, CAN.—Windsor and Walkerville Electric Railway Co.; overhead conductor, 1½ miles, 1 motor car. Van Depoele system.
WOONSOCKET, R. I.—Woonsocket St. Railway Co.; overhead conductors.

Constructing or Under Contract.

Ansonia, Conn.
Allegheny, Pa.
Dayton, O.
Elsinore, Cal.
Harrisburg, Pa.
Ithaca, N. Y.
Jamaica, N. Y.
Lakeside, O.
Los Angeles, Cal.
Middletown, Conn.
New York, N. Y.
Pittsburg, Pa.
Richmond, Va.
San Diego, Cal.
St. Catherines, Can.
St. Joseph, Mo.
Worcester, Mass.
Wilmington, Del.

New Roads Projected.

Alameda, Cal.
Atlanta, Ga.
Bangor, Me.
Bellevue, Pa.
Biddeford, Me.
Boston, Mass.
Bridgeton, N. J.
Bayonne, N. J.
Brookline, Mass.
Brooklyn, N. Y.
Butte, Mont.
Birmingham, Ala.
Carbondale, Pa.
Chicopee, Mass.
Cincinnati, O.
Coney Island, N. Y.
Elizabeth, N. J.
Eureka, Cal.
East Cambridge, Mass.
Easton, Pa.
Framingham, Mass.
Galveston, Tex.
Flushing, N. Y.
Fort Smith, Ark.
Jersey City, N. J.
Jacksonville, Fla.
Lincoln, Neb.
Milwaukee, Wis.
Muncie, Ind.
Newark, N. J.
Newton, Mass.
Newton, Kan.
Oakland, Cal.
Ontario, Cal.
Orange, N. J.
Oswego, N. Y.
Passadena, Cal.
Philadelphia, Pa.
Plainfield, N. J.
Pensacola, Fla.
Port Chester, N. Y.
Rochester, N. Y.
Rockaway, N. Y.
Scranton, Pa.
San Francisco, Cal.
San Jose, Cal.
San Antonio, Tex.
Springfield, Mass.
St. Augustine, Fla.
St. Paul, Minn.
Tacoma, Wash. Ter.
Tiffin, O.
Winston, N. C.
Westfield, Mass.
Wooster, O.

CHICAGO, ILL.—THE VAN DEPOELE ELECTRIC MANUFACTURING CO. have asked for a franchise from the Lake View city council to run overhead wires from Diversy street north six miles. The company agrees to go underground in one year. If this line proves satisfactory to Mr. Yerkes, the president of the North Side system of street railways, it is thought he will adopt the Van Depoele electric railway upon other lines.

RICHMOND, VA.—THE RICHMOND UNION PASSENGER RAILWAY CO. expected to complete their road and to have it running before this time. They have 13 miles of track, of 4 ft. 8 in. gauge, 45 lb. rail, and will use 40 cars with Sprague electric motors, two on each car. The cars are to be heated by an electric apparatus invented by Dr. W. Leigh Burton, of Richmond.

BROOKLYN AND CONEY ISLAND.—This company which operates a horse railroad from Brooklyn to Coney Island, will reconstruct its road-bed before next season and will substitute electricity for horse-power.

THE VAN DEPOELE ELECTRIC RAILWAY AND POWER CO. has been incorporated with a capital of $2,000,000 for the purpose of purchasing the good will and street railway patents and plant of the Van Depoele Electric Manufacturing Co. The new company will proceed at once to build a new factory, costing not less than $500,000, and with the increased capital will be able to cover the field in a thoroughly satisfactory manner.

NEW YORK NORTH AND EAST RIVERS RAILWAY CO., which has laid double tracks on Fulton street, has secured permission from Arthur Leary, president of the Bleecker street line, to relay the tracks of the latter company on Fulton street. When this is done the electric conduit, on the Bentley-Knight system, which is in process of construction at Pittsburg, will be put in place. The stationary engines and boilers are ready and awaiting shipment from Providence. The J. G. Brill Co., of Philadelphia, have notified the company that the 20 cars they ordered some time ago are almost ready. The Eighth Avenue R. R. Co. and the Belt Line Co. have given the electric company the right to run the cars over their tracks on Fulton and West streets.

Digitized by Google

THE NATIONAL TELEPHONE EXCHANGE ASSOCIATION.—ANNUAL MEETING.

The National Telephone Exchange Association assembled at Pittsburg on the morning of September 26th, and continued its sessions till afternoon of the following day. President C. N. Fay, of Chicago, presided. The reports of committees showed the affairs of the association to be in a flourishing condition. An amendment to the constitution making October the time for paying annual dues instead of July was adopted.

Henry Metzger, of Pittsburg, was unanimously elected president for the ensuing year. The following officers were also elected :—William D. Sargent, of Brooklyn, vice-president ; H. L. Storke, New York, treasurer. E. J. Hall, Jr., of New York, was elected a member of the advisory committee in place of W. A. Jackson, of Detroit, whose term had expired.

Several papers of much interest were read during the sessions, among which were the following :—Telephone Subscribers *vs.* Knights of Labor, by Mr. C. N. Fay ; Notes on Long-Distance Telephoning, by Mr. Ed. J. Hall, Jr.; Ten Years Progress in Practical Telephony, by Mr. T. D. Lockwood ; The New System of Designating and Ordering Wire, Devised by a Committee of the National Electric Light Association, by Mr. A. V. Garratt ; Underground Work, by Mr. W. D. Sargent.

The members of the association spent Tuesday afternoon, after adjourning at 1 o'clock, in the pleasures of an excursion up the Monongahela, as far as Braddock, hospitably arranged for them through the kindness of Mr. Henry Metzger.

AN IMPORTANT ELECTRIC LIGHTING COMBINATION.

Some months since the Thomson-Houston Electric Co., of Boston, commenced the installation of a number of incandescent electric lighting plants, in which the distribution was effected by means of alternating-current generators and converters, upon which legal proceedings were instituted by the Westinghouse Electric Co., of Pittsburg, alleging infringement by the former company of the Gaulard-Gibbs patent which is owned and controlled by the Westinghouse company. The suit referred to was brought in the Massachusetts district of the United States Court, but no testimony has as yet been taken. It is now authoritatively announced that the suit has been withdrawn, and that an amicable arrangement has been entered into between the two companies, by which they will hereafter operate in harmony and in close business relations. It is learned that by the terms of the agreement, the Thomson-Houston company acknowledge the validity of the Gaulard-Gibbs patents relating to electrical distribution by alternating currents, and will hereafter work under a license from the Westinghouse company. The Thomson-Houston company acquire the right to install the Westinghouse system in the six New England states, and also in connection with the arc lighting plants which it has established in the principal towns and cities throughout the United States, some 200 or more in number, most of which are operated by local companies ; while on the other hand, the Westinghouse company will install the Thomson-Houston arc system, wherever a plant of that kind may be needed in connection with the Westinghouse stations. This practical union of two business interests between two of the strongest and most energetically managed electric lighting corporations of the country cannot fail to have an important influence on the future of the electric lighting industry in the United States. It cannot be otherwise than mutually beneficial to the stockholders of both companies, not only in greatly facilitating the rapid extension of electric lighting, but in relieving them from the annoyance of a tedious and expensive course of litigation. The joint product of the extensive manufacturing establishments of the Westinghouse Electric Co. at Pittsburg, and the Thomson-Houston company at Lynn, will amount to several thousand lamps per day together with the necessary dynamos and converters, and the present indications are that the facilities of both factories will be taxed to the utmost to supply the immediate future demands for the extension of electric lighting.

MR. STEPHEN D. FIELD'S MOTOR ON A BRANCH OF THE ELEVATED ROADS.

The Field electric motor has been running experimentally with a good degree of success on the branch of the Third avenue elevated railroad which runs from the Thirty-fourth street station in Third avenue to the station at the Thirty-fourth street Ferry nearly every day of the latter part of September. The trials are made on the north track, usually between 10 o'clock a.m. and 12 m. They are well worth the careful attention of engineers and others interested in electrical traction.

Mr. Stephen D. Field, the inventor, conducts the experiments in person. Mr. Field is working at considerable disadvantage, being obliged to locate his dynamo at a point more than half-a-mile from the end of the section of track used. His large motor directly connected to the driving wheels, and, therefore, running at a relatively very low rate of speed, works satisfactorily. The sparking at the brushes is very slight indeed. The dynamo used to supply the current is of the very interesting design of Mr. R. Eickmeyer, and of the "iron-clad" type described by Mr. Eickmeyer at the Electric Club some months ago. Mr. Field's success thus far is very promising, and it is to be hoped that his plans for electric traction on the elevated roads will be carried out on a sufficient scale to demonstrate their utility thoroughly.

ELECTRIC LIGHT AND POWER.

AT NORTHAMPTON, MASS., the local electric light company has made a contract with the city authorities to light the city hall with 53 incandescents and three arcs ; two of the arcs are to go in the main hall. The city will pay $225 a year for the bulk of this lighting, and by the night for the hall lighting. Northampton has now 58 miles of electric lighting circuits.

THE PITTSFIELD ELECTRIC ILLUMINATING CO., of Pittsfield, Mass., are changing their plant from the old direct current system to the Westinghouse alternating system Their first installment is for 1,300 lights, and they have received the contract for the city lighting for the ensuing year. Twenty-five c. p. lamps will be used. They are also preparing to run a line to Lenox, Mass., a distance of six miles, for the purpose of lighting the summer residences in that town.

THE GREENVILLE (S. C.) GAS LIGHT CO. will introduce electric lights. The Brush system has been adopted. Sixty lights will be started out with, and the number will be increased as required.

MESSRS. PAINE AND FRANCIS, New England agents of the Edison United Manufacturing Co., announce the following new business ; Farmington Electric Light Co., Farmington, Me., 300 lights; S. S. Pierce & Co., 450 lights ; American Rubber Co., Cambridgeport, Mass., 1,200 lights ; Tremont and Suffolk Mills, Lowell, Mass., 50 lights ; F. E. Reed, Worcester, Mass. (increase), 100 lights ; Bates Manufacturing Co., Lewiston, Me., 300 lights.

THE LAWRENCE (MASS) GAS CO. has decided to put in a complete steam plant for running electric lights in connection with its gas supply.

THE CAPITAL GAS CO., of Sacramento, Cal., which succeeded the Pacific Thomson-Houston Electric Light and Power Co., is now increasing its plant, and adding a 180 h. p. Corliss engine. Mr. J. D. Coleman is the superintendent of the electric light department.

NEW ORLEANS.—The bids opened September 1st, for lighting the public buildings in 1888 were : Brush Electric Light Co., $7,350 per year ; New Orleans Gas Light Co., $4,999.68 per year ; Louisiana Electric Light Co., $81 per light for incandescent lights, $600 per light for arc lights for five years, or a total of $30,864 for the five years.

THE RACINE (WIS.) GAS LIGHT CO. has put in a hundred 2,000 c. p. arc lights, and expects to begin lighting November 1st. The rates will be $75 per light for all-night lighting, and $50 per night till midnight per annum for the city. The rate for commercial lighting will be $8 per month till midnight.

THE SOUTHERN ELECTRICAL CONSTRUCTION AND SUPPLY CO. is putting in a 650-light Westinghouse incandescent plant at Waco, Tex.; also, a similar plant, with 50 arcs, in Dallas, same state.

THE ASHTABULA WATER WORKS CO., of Ashtabula, O., will add electric lighting to its water works business. It has begun by ordering 60 lights from the American Electric Manufacturing Co., which it expects to increase considerably during the coming fall.

THE ROME GAS LIGHT CO., Rome, N. Y., will supply incandescent electric lamps.

THE NEW HAVEN (CONN.) ELECTRIC LIGHT CO. is about to erect another engine, this being the eleventh one, and two more boilers, making eight in all, in order to supply the demand for both arc and incandescent lights furnished by them. The engines were all built by Armington & Sims, and the boilers are tubular.

THE WALTHAM GAS AND ELECTRIC LIGHTING CO., which has been in operation about six months, is now running two 200-light incandescent machines ; one 45-light and one 50-light arc machines. It has two Armington-Sims engines, and expects to put some motors in in the fall.

THE WASHINGTON GAS LIGHT CO., Washington, Ind., has gone into the electric lighting business, and will run its plant by the aid of an Otto gas engine.

THE PLAINFIELD ELECTRIC LIGHT CO., Plainfield, N. J., has nearly completed the enlargement of its station to a capacity of 3,000 lights on the Westinghouse alternating system.

THE HEISLER ELECTRIC LIGHT CO., of St. Louis, of which Messrs. Hyer and Montgomery, Aldrich Building, New York city, are the agents for New York state, has recently put up a line of its incandescent lights for the lighting of the streets of the villages of Fishkill Landing and Matteawan, N. Y., and on Monday evening, August 28th, the people of those places (which are virtually one village) had a celebration in honor of the inauguration

Digitized by Google

of the system. This company has put up these lights in a number of cities in various parts of the west, but has never until now put its system into practical operation in the east. In the Heisler system the lamps which are from 20 to 200 c. p., and are said to be very steady and white, are run in series. The streets of the towns mentioned have 18 miles of wire, from which 183, 20 and 30 c. p. lights are furnished. The wire is of copper, No. 8 or 9 B. and S. gauge.

Foreign.

Belgium.—Railway Station Lighting.—Tenders have been received for lighting the Schaerbeck railway station which affords a useful means of comparing the cost of gas lighting and electric lighting. The St. Josse ten-Noode gas works propose 37 burners each of 110 c. p., and using 32 cubic feet per hour, the cost of gas would be about 73 cents per thousand, and the cost of the installation would be $4,480. Schuckert, of Nurnberg, represented by M. Bouckard, proposes 24 arc lights of 550 c. p., at 9¾ cents per lamp-hour for 3,000 hours guaranteed; at 8½ cents for the following 500 hours, and 7½ cents for any further time, the cost of the installation would be $21,825, and the railway management at the end of the term of 10 years would have to take it over at $7,420. The Societe Anonyme d'Eclairage du Center has submitted three alternative tenders: [a] 11 arc lamps of 1,000 c. p., at 12¼ cents per hour for the first 3,000 hours, 10¼ cents for the next 500 hours, and 8½ cents for the remainder, the cost of installation would be $11,150, the plant being taken over at the expiration of the term for $3,580; [b] 16 lamps of 850 c. p., at 10¼ cents for the first 3,000 hours, 8½ cents for the next 500 hours, and 6½ cents for the remainder, the cost of installation would be $12,610, and the sum to be paid for same at the expiration of the term $4,750; [c] for lighting the two combined stations, 21 arc lamps of 1,000 c. p., at 12½ cents for the first 3,000 hours, 10½ cents for the next 500 hours, and 8 cents for the remainder, the cost of installation would be $19,875, to be bought at the end of the term for $7,370. The engineers of the railway are considering these proposals, and on a decision being come to the contractor will have to complete the installation within six months.

Buenos Ayres.—Mr. Chas. V. Boisot, agent of the Edison Electric Light Co., is arranging to make a large installation of the Edison incandescent light in the city of Buenos Ayres. In the Buenos Ayres *Herald*, it is stated that the plant is to be laid down for a capacity of 7,000 16 c. p. lamps, and that the service will include domestic lighting as well as streets, theatres, public buildings and stores. The price of gas at Buenos Ayres is given at $4.50 per thousand feet by the *Herald*. Such a rate for gas offers a tempting opportunity for the introduction of electric lighting.

PERSONAL MENTION.

From October 15th, Mr. C. J. Kintner, of Wiedersheim and Kintner, of Philadelphia, will be located in New York, at 265 Broadway, where he will establish a New York office of the firm. The presence of Mr. Kintner in New York, will no doubt prove advantageous to the general patent business of the firm, and it will surely be gratifying to his many friends here.

MANUFACTURING AND TRADE NOTES.

UNION SWITCH AND SIGNAL CO.—This company is putting in two large interlocking systems on the Pennsylvania at Pittsburg, and is at work on a number of new towers on the Philadelphia and middle divisions of that road. In addition to the roads named in several former notices, the company has contracts from the Atchison, Topeka & Santa Fe; Chicago, Milwaukee & St. Paul; Chicago & Northwestern; Pittsburg, Cincinnati & St. Louis; Philadelphia & Reading; Central of New Jersey; Baltimore & Ohio; Lake Shore & Michigan Southern; Kings County Elevated (Brooklyn, N. Y.), and the Wisconsin Central. The business of the company bids fair to largely exceed that of any previous year.

THE BALL ENGINE CO., of Erie Pa., is running night and day to supply the demand for its high speed automatic cut-off engine. The greatest demand for these engines comes from the electric lighting interests. This company has turned out during the first half of this year in the neighborhood of 15,000 h. p.

THE JARVIS ENGINEERING CO., of Boston, has received the order for the third Armington & Sims Co. engine for the Newton Electric Light Co., of Newton, Mass.

THE ROCHOW COMPOUND ENGINE.—F. Rochow, manufacturer, Brooklyn, N. Y.—is used in the machinery department of the Murray Hill Hotel, in New York city, where can be seen two of the largest size, and one medium sized Rochow engines, furnishing the power for the immense electric light and refrigerating systems, besides the passenger and freight elevators. All the other power required in this great hostelry also comes from the same source.

THE INDIA RUBBER AND GUTTA-PERCHA INSULATING CO., 159 Front street, New York, W. M. Habirshaw, general manager, are supplying India-rubber covered leads for electric light service in sizes varying from 316 to 2½ circular mils of conductor, both solid and stranded. They have prepared, for the use of purchasers, a table of the sizes of their electric light leads showing the circular millage, weight, insulation, nearest B. W. G. and price per foot.

CATALOGUES AND PAMPHLETS RECEIVED.

The Treatise on Medical Electricity and Catalogue of Electro-Medical Apparatus, a new edition of which we have received from the Jerome Kidder Mfg. Co., has grown to a considerable volume of 112 pages. Besides Dr. Kidder's Researches in Electro-Allotropic Physiology, Uses of Different Qualities of Electricity to Cure Disease, it contains many abstracts from medical books and papers touching electrical therapeutics and directions for all ordinary applications. Dr. Kidder's study and practice, together with the excellence and variety of the electrical appliances devised and manufactured by him and the company bearing his name, are too well known to require enumeration at this time.

Mr. J. H. Guest, of Brooklyn, N. Y., sends us a circular setting forth his Automatic Fire Telegraph System. Mr. Guest gives a list of twelve patents—from 1870 to 1887. The circular contains the following announcements:

"The automatic transmission of fire-alarm signals from one station to another, by means of thermostatic devices operating upon closed electrical circuits; or, the combination with a battery, one or more alarms, and a main circuit, of one or more branch circuits containing thermostats, the closure of the circuit in any branch by its thermostat operating all the alarms, infringes the rights secured to me by the above patents, the infringement of which, by either *manufacturing, vending or using*, by unauthorized parties, renders such parties responsible for such unlawful use, and all the consequences thereof, and liable to suit therefor.

"The subscriber claims to have been the pioneer in the invention and introduction of automatic electric fire-alarm systems, thermostatically operated, as the records of his past business in this field plainly show: and all or any of the closed circuit thermostatic fire alarm systems at present in use infringe his rights, and such infringement will be noticed, and parties so infringing will be dealt with according to law for such cases made and provided."

From the information conveyed in the circular, Mr. Guest appears to have elaborated a very comprehensive system of fire-alarms, applicable to many conditions, and capable of use over existing lines, such as those of district telegraph companies.

Horace Van Sands, 733 Broadway, New York, sends us a catalogue of his electrical goods, under the title "Electrical Appliances, How Made, and How Used." Mr. Van Sands gives much fuller description and information concerning electric bells and similar appliances, with their connections very clearly illustrated by neat cuts and diagrams, than are often found in such lists. The pamphlet should prove very useful to the large number of people who have to put up or use signalling apparatus in localities where the services of electrical workmen are not readily at command. Perhaps careful attention to the information and directions furnished in Mr. Van Sand's pamphlet, would improve the service rendered by many regularly engaged in such work. The very simplicity of electric bell work tempts into it many careless hands, whose slip-shod work annoys the purchaser and discredits electricity in domestic service.

The Edison Electric Light Co.'s new circular is a handsome pamphlet of 38 pages, and is devoted chiefly to setting forth the advantages of their central station lighting system and its growth during the past few years. A list of 103 companies, running or organized in various parts of the country is given. The parent company announces its intention to continue its practice of receiving stock in local companies as a consideration for its franchises or licenses under its patents. The circular is illustrated with handsome cuts of the stations at Detroit, Mich., Harrisburg, Pa., Milan, Italy, and others.

The Baxter Electric Manufacturing and Motor Co., in their catalogue, give very full information concerning the construction and the capacities of their motors. The catalogue contains a very concise and forcible statement of the advantages of electric motors for the supply of power in relatively small amounts, illustrated by figures of the cost of steam power in similar amounts. The practical skill and business energy of the Baxter company have, in a relatively short period, placed them in the front rank of producers of electric motors.

AN INFRINGEMENT SUIT DECIDED.

U. S. CIRCUIT COURT.—SOUTHERN DISTRICT OF NEW YORK.

LA RUE *v.* WESTERN ELECTRIC COMPANY.

Decided May 16, 1887.

EDWARDS.—Telegraph Keys.

Letters Patent No. 270,767, granted January 16, 1883, to Edgar A. Edwards for an improvement in telegraph keys, construed, and held to be for a patentable invention.

Mr. Arthur v. Briesen, for the complainant.
Mr. George P. Barton, for the defendants.
COXE, *J.*:

This is an equity action for infringement of letters patent No. 270,767, granted to Edgar A. Edwards, January 16, 1883, and by him assigned to the complainant.

The invention relates to instruments used for transmitting telegraphic signals, and is said to be an improvement upon the well-known Morse key, the inventor substituting as the lever fulcrum a torsional spring or strip of metal for the trunnions or pivots which were before in use. The patent contains four claims. In the first, second and fourth, "the circuit-breaking lever" is distinctly made an ingredient of the combination. The third claim is in these words:

3. The combination in a telegraph-key, of the lever fulcrumed upon the torsional spring with the adjusting screws H H_1, for regulating the amplitude of the lever movement and retractile resistance of the torsion spring, substantially as described.

It will be observed that this claim omits "the circuit-breaking lever" as an element, and in this respect is broader than the other three. The infringing instrument is called a "sounder," and contains no circuit-breaking lever" as this term is generally

Digitized by Google

understood in the art. The complainant, however, insists that the sounder has a lever which breaks not an electric but a magnetic circuit, and is therefore within all the claims of the patent. What the patentee invented, and unquestionably intended to secure, was a flat torsional spring, ribbed or otherwise, upon which a lever is fulcrumed, when in any electrical instrument, it can be substituted for the pre-existing trunnions and spiral spring and perform the two-fold function of a supporting-fulcrum and retractive spring. He distinctly says that he does not limit himself to the application of the spring to the key alone, as it is obvious that it may be used to replace the trunnions of the relay and sounder. He may, however, have so restricted three of his claims that they do not cover the instrument used by the defendants. It is not essential in the present action to decide this question. If it is held that the third claim is infringed the complainant will derive the same advantage as if the decree declared the infringement of all.

The defendants insist that the patent is void for want of utility and invention, and that they do not infringe. But a word need be said regarding the first defense. Several instruments embodying the invention have gone into practical operation, and have apparently been received with favor by telegraphists. In fact, it appears that an employé of the defendants, Charles D. Haskins, has, since the commencement of this suit, secured a patent, dated November 9, 1886, for an improvement in telegraph receiving instruments, one element of the combination being a torsional spring, substantially identical with the patented spring, the only difference being in the manner in which it is fastened to the lever. This patent was assigned to the defendants. It can hardly be said, then, that Edwards' invention is without utility. That which is used is useful. A thing to be useless can have no utility whatever. A patent is never declared invalid upon this ground at the instance of one who is deriving benefit by infringing upon its claims. (Gibbs *v.* Hoefner, 22 Blatchf., 36, and cases cited.)

Is the patent void for lack of invention? The defendants, for the purpose of illustrating that art at the date of the invention, have introduced in evidence a number of exhibits showing the manner in which telegraph keys were constructed prior thereto. It is unnecessary to refer to these, as they do not contain the torsional spring and add very little to the light thrown upon the prior art by the statements of the patent itself. The exhibits which are the nearest approach to the invention are the magnetic "pole-changer" and the "adjustable torsional spring." In the "pole-changer," first known in 1881, there is a lever which oscillates between fixed points and is fulcrumed upon the free end of a non-adjustable torsional spring. The principal office of this spring is to form a supporting fulcrum for the armature lever. The retractile force exerted by it is very slight. If one of the supporting posts in the patented apparatus were removed, its similarity to the "pole changer" would be apparent. The "adjustable torsional spring" exhibit is an enlarged model of an instrument made by one of the witnesses in 1878. It consists of a fine wire connected at each end to adjustable brackets, a lever suspended in the centre of the wire. It is not the purpose of the wire to cause repeated and regular oscillations of the ends of the lever. That it performs any torsional function is strenuously disputed. The wire is very fine, and as its ends are not firmly fastened, but to some extent are permitted to rotate in the holes of the brackets, it is not easy to see how it can be twisted to exert any appreciable force. It is enough to say that the matter is involved in doubt. Neither of these exhibits can be said to anticipate or otherwise to defeat the patent. It follows, therefore, that the patentee has made an invention, not a great one certainly, but one entitling him to a position far above the plane of the skilled mechanic. Torsional springs were of course well-known, so were telegraph keys and sounders minus this spring; but the combination of the patent was never before used, and there is nothing in the prior art to suggest it except to an inventor—to one who was a skilled artisan only it would never have occurred.

Do the defendants infringe? They argue in the negative, for the reason that the combination of the third claim is confined to a telegraph key, and by implication, to a "circuit breaking lever," and as they use the combination in a telegraph sounder and not in a key they do not infringe. They insist, further, that they do not employ the adjusting screws, H H_1. In regard to the latter suggestion, the defendants' expert testifies:

> I find two adjusting screws having a relation to the lever of the sounder similar to that of the screws, H H_1, to the lever of the key in the patent; but in the sounder they do not practically have any effect upon the retractile force applied in the lever.

The complainant's expert considers the functions the same in every particular. The court is satisfied that he is correct.

As has been seen, the third claim does not contain the element of a "circuit breaking lever," and in view of the clearly expressed intention of the patentee to include other telegraphic instruments it must be held to include the lever of a sounder. Fairly construed, the claim should read: "The combination in a telegraph key or sounder," &c. To restrict it to a "key" alone, as that word is known in telegraphy, would be most illiberal, and would unduly circumscribe the invention. No better illustration of this can be found than the following statement from the Haskins patent, before alluded to:

> The invention has been described in connection with a telegraph sounder, but it is evident that the torsion-spring may be applied to the armature lever of any telegraphic receiving instrument or to the lever of any telegraphic key without departing from the spirit of the invention.

Equally it is true that the Edwards spring may be applied to a sounder without departing from the spirit or the letter of the invention.

As the question of infringement was carefully examined by this court upon the motion for a preliminary injunction (28 Fed. Rep., 85; 36 O. G., 453), it is unnecessary to repeat what was then said.

There must be a decree in favor of the complainant upon the third claim for an injunction and an accounting.

As the motion to punish the defendants for contempt will probably turn upon a question of fact, which ought not to be determined upon affidavits, it is thought that this issue should also be referred to the master and the motion held in abeyance until the coming in of his report.

INVENTORS' RECORD.

Prepared expressly for THE ELECTRICIAN AND ELECTRICAL ENGINEER, *by* Pope, Edgecomb & Terry, *Solicitors of Patents for Electrical Inventions, 11 Wall Street, New York city.*

CLASSIFIED LIST OF UNITED STATES ELECTRICAL PATENTS.

From August 23d to Sept. 13th., 1887 (inclusive).

Alarms and Signals:—*Fire Alarm Telegraphic Repeater*, C. Burgher, 368,907, August 23. *Electric Call Bell*, J. G. Noyes, 369,808. *Electrical Annunciator Call System*, F. J. Patten, 369,810. *Electric Bell*, H. P. F. Jensen, B. Webb and J. Jensen, 369,989, September 13.

Clocks:—*Controlling Device for Clocks*, W. S. Scales, 368,689, August 23. *Electric Synchronizing Attachment for Clocks*, E. F. Bard, 369,386. *Electric Alarm Clock*, A. G. Woolley, 369,672, September 6.

Conductors, Insulators, Supports and Systems:—*Conduit for Electric Railways*, F. Euphrat, 368,576. *Connecting Device for Electrical Conductors*, W. J. Hammer, 368,764. *Support for Electric Conductors*, M. J. Hart, 368,766, August 23. *Conductor Tip*, S. S. Wheeler, 368,987. *Method of Making Impervious the Joints of the Lead Pipe of Electric Cables*, W. R. Patterson, 369,121. *Manufacture of Electrical Conductors*, J. J. Williamson, 369,144. *Joint for Telegraphic Wires*, D. P. Emminger, 369,238. *Insulating Telegraph Cables*, W. R. Patterson, 369,259, August 30. *Underground Electric Cable*, J. H. Dalzell, 369,320. *Lead-Armored Conductor and Process of Making the Same*, T. G. Turner, 369,372. *Electrical Conductor*, H. F. Campbell, 369,394. *Insulator*, E. T. Greenfield, 369,447. *Manufacture of Bunched Electric Cables*, J. H. Dalzell, 369,592. *Bunched Electric Cables*, same, 369,593. *Manufacture of Diminishing Electric Cables*, same, 369,594, September 6. *Manufacture of Insulated Electrical Conductors*, J. T. Jaques, 369,793. *Underground Conduit for Electric Wires*, G. Rader, 369,813. September 13.

Distribution:—*System of Electrical Distribution*, T. A. Edison, 369,280, August 30, same, 369,439, 369,441, 369,442, and 369,443, September 6.

Dynamos and Motors:—*Electric Generator*, L. G. Woolley, 369,219, August 30. *Dynamo-Electric Generator*, R. Eickmeyer, 369,400. *Regulator for Dynamo-Electric Machines*, E. Place, 369,655, September 6. *Dynamo-Electric Machine or Motor*, E. Thomson, 369,754. *Regulation of Electric Motors*, S. S. Wheeler, 370,000, September 13.

Galvanic Batteries:—*Electrical Battery*, T. W. Bryant, 368,806, August 23. *Galvanic Battery*, J. A. Seely, 369,034, August 30. *Galvanic Cell*, L. Drescher, 369,505, September 6. *Galvanic Battery*, H. J. Brewer, 369,769, September 13.

Lamps and Appurtenances:—*Electric Safety Lamp for Use in Mines* M. Settle, 368,857, August 23. *Mast-Arm for Hanging Electric Street-Lamps*, F. H. Lacey, 368,955. *Manufacture of Incandescent Electric Lamp Filaments*, A. Bernstein, 369,091. *Electric Arc Lamp*, O. P. Loomis, 369,194. *Process of Treating Filaments for Incandescent Electric Lights*, E. P. Thompson, 369,267, August 30. *Electric Lamp*, O. P. Loomis, 369,319. *Electric Arc Lamp*, H. Lemp, 369,456. *Feed Mechanism for Arc Lights*, W. W. Street, 369,568. *Arc Lamp*, D. J. Hauss, 369,640. *Carbonizing Mold for Incandescent Electric Light Filaments*, E. P. Thompson, 369,664. *Method of Testing Electric Light Filaments*, same, 369,665. *Carbonizing Mold for Incandescent Electric Light Filaments*, same, 369,666, September 6. *Apparatus for Making Carbons*, J. T. Lister, Reissue, 10,866, September 13.

Miscellaneous:—*Electrical Resistance*, W. H. Knight, 368,596. *Electric Hose Coupling*, E. H. Crosby, 368,654. *Electrical Apparatus for Voiding Water Pipes*, J. W. Kent and R. Orr, 368,674. *Process of Tanning by Electricity*, J. W. Aborn and J. Landin, 368,745. *Safety Catch for Electrical Circuits*, W. J. Hammer, 368,765. *Portable Electric Propeller for Boats*, G. Trouvé, 368,796. *Electrical Resistance Coil*, C. D. Baker, 368,804. *Combined Electric Receiving and Transmitting Device*, F. S Carter, 368,809, August 23. *Electro-Magnetic Dental Mallet and Plugger*, P. Helmer, 368,948. *Ship's Course Corrector*, C. Rouget, 368,973. *Lightning Arrester*, E. A. Sperry 369,036, August 30. *Electrical Heating Apparatus*, A. H. Buckelew, 369,432. *Lightning Arrester*, A. B. Depuy, 369,436. *Sediment-Trap and Solution-Clarifier*, M. H. Levett, 369,457. *Magnetic Register-Connection for Water Meters*, A. S. Dietzman, and G. Cressey, 369,595, September 6. *Apparatus for Backing Electrotypes*, R. Gnichwitz, 369,706. *Electric Valve Controller*, W. H. Markland, 369,801. *Electrical Cut-Out*, N. F. Stoddard, 369,889. *Lightning Conductor*, W. Brown, 369,915. *Electric Heat-Regulating Apparatus*, W. A. Connelly, 370,007, September 13.

Railways and Appliances:—*Stop-Cock for Electro-Pneumatic Brake Systems*, J. F. Carpenter, 368,650, August 23. *Apparatus for Lighting Cars by Electricity*, S. H. Short, 369,561, September 6. *Railway Telegraph*, L. J Phelps, 369,880. *Governor for Electro-Magnetic Brake Circuits*, G. F. Card, 369,917. *Electric Railway-Signal*, J. H. Farrar, 369,929, September 13.

Storage Batteries:—*Secondary Battery or Accumulator*, A. E. Peyrusson, 368,608, August 23.

Telegraphs:—*Printing Telegraph*, R. J. Sheehy, 368,692, 368,858, and 368,859, August 23. *System of Synchronism for Telegraphy*, G. A. Cassagnes, 368,931, August 30. *Printing Telegraph*, W. B. Wood, 369,577, September 6.

Telephones, Systems and Appliances:—*Telephone*, H. L. Todd, 368,628, August 23. *Test-Circuit for Telephone Cables*, W. R. Patterson, 369,122. *Electric Speaking Telephone*, M. Martin, 369,256, August 30. *Telephone*, F. C. Watkins, 369,376. *Krotophone*, same, 369,377. *Krotophone-Receiver*, same, 369,378. *Telephone Transmitter*, same, 369,379, September 6.

Digitized by Google

THE ELECTRICIAN
AND
ELECTRICAL ENGINEER.

Conducted by F. L. POPE. G. M. PHELPS, JR., Associate Editor.

PUBLISHED MONTHLY BY

THE ELECTRICAL PUBLISHING CO.,

115 Nassau Street, New York city.

European Agent, F. H. WEBB, 4, The Sanctuary, Westminster, London, S.W., Eng.

TERMS OF SUBSCRIPTION.

United States and Canada,	per annum,	$3.00
Four or more Copies, in Clubs (each)	"	2.50
One Copy, Four Months,		1.00
Great Britain and other Foreign Countries within the Postal Union	"	4.00
Single Copies,		.25

[*Entered at the Post Office at New York, N. Y., as second class mail matter.*]

EDITORIAL ANNOUNCEMENTS.

Addresses.—*Business letters should be addressed and drafts, checks and post-office orders made payable to the order of the* ELECTRICAL PUBLISHING CO. *Communications for the attention of the editors should be addressed,* EDITOR OF THE ELECTRICIAN AND ELECTRICAL ENGINEER, 115 *Nassau Street, New York city.*

Communications *suitable for our columns will be welcomed from any quarter. Discussions of subjects relating to all branches of electro-technical work, by persons practically acquainted with them, are especially desired. Unavailable and rejected manuscripts will be returned only when accompanied by the necessary postage.*

Advertisements.—*We can entertain no proposition to publish anything for pay, or in consideration of advertising patronage, except in our advertising columns. Our editorial columns will express our own opinions only, and we shall present in other columns only such matter as we consider of interest or value to our readers*

NEW YORK, NOVEMBER, 1887.

SOME OF THE RESULTS OF TELEGRAPHIC COMPETITION.

NEARLY a year since, in a discussion of the commercial prospects of the telegraph business in the United States, under the conditions then prevailing, we expressed the opinion that the competitive organizations were suffering a greater proportionate loss of revenue than the Western Union company, for the reason that the non-remunerative rates then and since in force applied to a greater share of their entire business. Commenting upon the probable result of such a state of affairs, we said:

It is wholly improbable that the competitors of the Western Union company will be able to inflict any greater damage upon its revenues in future than they have done during the past year, while at the same time it will be seen that even under these conditions its net earnings have not gone below four per cent. upon its present capital. As Western Union is well known to be controlled by a small group of strong capitalists, of whom Mr. Gould is the chief, there is no apparent reason why those astute gentlemen cannot if they choose, afford to let the present condition of affairs go on indefinitely, or until their competitors are exhausted, and then take them in upon some basis which will be remunerative to themselves. Such a consummation must necessarily result in a restoration of the rates to a reasonable and remunerative figure, but we have already shown that such an increase would, as far as the public is concerned, amount to but a trifling sum on each message transmitted.

Our views as to the ultimate outcome of the situation are proven, by the subsequent progress of events, to have been singularly accurate. Mr. Jay Gould and his fellow capitalists have waited, with their accustomed patience, until the Baltimore and Ohio company became sufficiently "exhausted," and they then proceeded to take it in "on a basis remunerative to themselves." As to the truth of the last part of the proposition there can be no doubt, if as generally understood, the price paid was only some $4,000,000, reckoning Western Union stock at its market value. If, as officially stated, the plant purchased embraces about 58,500 miles of wire, this would amount to about $70 per mile. It was by no means a bad purchase, especially in view of the facts that the plant is nearly new and of first-class construction, and that many of the franchises and rights of way, such for example as that over the West Shore and Nickel-plate railroads, are extremely valuable, and that the capitalization of the present Western Union plant is about twice as great, viz., $140 per mile.

It is stated apparently by authority, that during the last year the business of the Baltimore and Ohio amounted to 7,500,000 messages, for which it received $2,983,506, or approximately 30.9 cents per message, as against the 30.25 cents per message reported by the Western Union. It is difficult to understand how this can be true, unless, as is probably the fact, the estimates are made upon the basis of a different number of words per message. For if the figures are made on the same basis there is no apparent reason why the Baltimore and Ohio company could not have earned a profit of over half a million dollars, in which case it could scarcely have gone begging for a purchaser as it did, at $4,000,000.

The fundamental error originally committed by the Baltimore and Ohio company was in adopting the suicidal policy which has been the direct cause of the failure of every competitive telegraphic enterprise from the beginning. We refer to the policy of cutting rates. If the Baltimore and Ohio, with its superior equipment and excellent personnel, had maintained a minimum 25 cent rate from the start, and had at the same time given the business public an ideally prompt and accurate service, such a service as every experienced telegrapher knows can be given if only the proper inducements are offered to the employés, the outcome would, in our opinion, have been a very different one. Such an experiment remains to be tried, and we sincerely hope to see it done. It is manifestly impossible to transmit messages at a profit at such absurdly low rates as 10 and 15 cents, if the labor employed is to be reasonably or even fairly remunerated. President Green sums the matter up in his accustomed pithy and epigrammatic way, when he says, in his annual report, "Our greatest competitor is time, and just in the proportion that we can overcome time in transmission and delivery of messages will our business be increased." It is to be hoped that he may be enabled to carry out the policy which he has thus indicated.

ELECTRICITY ON STREET RAILWAYS.

THE recent convention of street railway managers at Philadelphia discussed little else than the question of the application of electric power to street railway service. The able and exhaustive paper of Mr. Wharton, which we print elsewhere in this issue, based on the results of experimental work carried on under his own directions, must have opened the eyes of some of the more conservative brethren who are waiting, in various parts of the country, to find out whether electricity "is going to work" before committing themselves to its use. We infer that Mr.

Digitized by Google

Wharton is of the opinion that the direct-supply method although well adapted to a small traffic, will not answer for a large traffic, as, for example, on the Third Avenue line in New York. In this he is, of course, in error, but in the main his conclusions are eminently sound and satisfactory. Mr. Richards, of Boston, who is admitted on all sides to be one of the ablest street-railway managers in the world, puts himself on record as an enthusiastic believer in the immediate utility of the electric system. The accumulator method, which at first was regarded with little favor, at least by electricians, is giving surprisingly good results in Philadelphia and Boston, and its future is apparently full of promise. The direct-supply method has already more than fulfilled the expectations of its friends. An electric street car "boom" is certainly upon us.

EFFICIENCY OF THE DIRECT VS. THE ALTERNATING SYSTEM OF DISTRIBUTION.

In a public hearing before the Massachusetts Gas Commissioners a few weeks since, Prof. W. D. Marks, of Philadelphia, made the somewhat amazing statement that the maximum efficiency of the alternating dynamo is about 70 per cent., and that the efficiency of the converter ordinarily used in connection with it is 80 per cent.; from which he deduced that the total maximum efficiency of the alternating system is 56 per cent., as against 85 for the direct system of the Edison type. He also asserted that the economy of the direct system, within the distance of two-thirds of a mile, is from 60 to 100 per cent. greater than that of the alternating system. At the same hearing Mr. W. F. Jenks, of the Edison company, stated that at Brockton, Mass., seven and a half 16-candle lamps per horse-power were obtained. The company furnishing the alternating system guarantee ten 16-candle lamps per horse-power. The problem that we would like to have solved is this: How is it that a system having a maximum efficiency of only 56 per cent. furnishes 160 candles per horse-power, while another system having an efficiency of 85 per cent. can furnish only 120? It would be interesting to electric light engineers to know the authority for the figures of the eminent professor.

The demand for trained skill in electrical engineering continues to increase faster than the supply, notwithstanding the influx to that vocation of large numbers of young men during the past few years, and the successful establishment of electrical courses in many of our high class technical schools. It is not too much to say that no extensive corporation or firm engaged in the fields of electric light and electric power is able to man its work adequately. It is easier to get business than it is to execute the work. The need is felt most in respect to the higher classes of service—service properly coming under the designation of electrical engineering. Although experimenters and scientific investigators have demonstrated many principles underlying the correct construction of dynamos and motors, and have published their researches and results, so that they are free to all, their systematic and thorough application is in many cases neglected, or, if not overlooked, fails of accomplishment perforce, because the men to apply them intelligently are not at hand. Badly designed dynamos or motors, insufficient or needlessly large conductors used in wiring, in short, failures to apply well-known principles in the design of apparatus or in the installation of plants, result in the loss of money to somebody. We feel very sure that the managers of leading manufacturing and contracting companies fully realize the situation and desire to have their designing and construction executed under the supervision of trained skill and accurate knowledge. The money value of such knowledge and skill is doubtless growing in their eyes, and will, we trust, lead to such ample compensation as will increase the attractiveness of electrical engineering as a calling to capable and energetic young men.

The reforms in the Patent Office embodied in the bill prepared by the legal committee of the National Electric Light Association (which we reprint in another column) for submission to Congress, commend themselves at once to all acquainted with the needs of the office and its shortcomings in serving the best interests of inventors and the general public. In a circular pamphlet, the Association sets forth many considerations in favor of the proposed legislation, supplementing the able statement of Mr. Arthur Steuart, chairman of the legal committee, by opinions of much force and cogency, in contributions by Mr. Albert H. Walker, of Hartford, Mr. Benjamin Price, of Baltimore and Mr. Ephraim Banning, of Chicago.

The Association earnestly requests its members as well as all other persons who approve the proposed reforms, to make personal efforts in developing opinion in favor of the bill, particularly among members of Congress. If their request be heartily responded to, nearly every member of Congress can be made acquainted with the merits of the bill before its presentation next winter.

The American Institute Electrical Exhibition, as was expected, affords an excellent opportunity for the general public to become acquainted with the generation, operation and application of the force that now serves so many of their daily wants. The field is well covered by the numerous and various displays, ranging from electric railways and electric lighting plants to annunciators and push buttons for house calls. The exhibition will prove useful in spreading information, and was wisely undertaken by the New York Electrical Society.

The appeal of the National Electric Light Association, to its members for contributions to a fund of $2,500 for printing the proceedings of the last three semi-annual meetings and for printing and circulating the congressional bill for Patent Office reform, and documents in furtherance of that measure, seems fully justified by the significance and value of the work, and will doubtless lead to the raising of the required amount at an early day. As at present constituted, the annual receipts of the Association from membership dues are quite inadequate for the provision of such a fund.

There is no finer drive, for its length, in America, than the ten miles of the old Albany Post road, along the east bank of the Hudson from Yonkers to Tarrytown. Flanked by magnificent villas and country seats, with their smoothly shaven lawns, and exquisite ornamental plantations, shaded by rows of venerable elms, and surrounded by evidences of wealth and taste on every side, it may well be as it is, the pride of Westchester County. But in the vicinity of Tarrytown, the electric light fiend has been let loose with results which literally beggar description. Rough, unpainted poles, set in an irregular and scattering manner, thick, white wires, strung in a slack and slovenly way, zigzagging across at inelegant angles; bracketed to the branches of the fine old elms, nothing could be imagined better calculated to excite the disgust of the average inhabitant against electric lighting, than this wanton and utterly unnecessary disfigurement of a magnificent avenue.

Those of our readers who may be annoyed by the delay in issuing this number of The Electrician and Electrical Engineer, will please reserve their disapproval for the striking printers.

Digitized by Google

ARTICLES.

USES OF ELECTRICITY IN MILLS.

BY C. J. H. WOODBURY.

ATTENTION is frequently called to the extent to which the devices operated by electricity are becoming a necessity in commercial affairs, or a convenience held no less essential in matters of domestic life. Few persons have any idea as to the extent to which electricity is used in large manufactories, particularly in textile mills where the utmost regularity of operation is essential to every detail of the organization. These large establishments with numerous buildings enclosed in an extensive territory, form a community of their own where the labor toils under circumstances of such close competition that the difference between prosperity and failure is obtained by the skill with which the utilization of the waste material is accomplished.

For example, suppose that a visitor should pass through one of these large cotton mills with eyes closed to everything except where electricity plays a part, and this method of eclipsing more prominent matters would of necessity reveal a large number of features in which electricity forms an essential condition.

In the first place, stepping into the office of the manager, there are the usual methods of signaling and communication by the ordinary electric push button and bell with wires leading from the desk of the manager to other portions of the building and to his numerous lieutenants on the premises.

The telephone is being introduced and is continually developing into a more important place in such surroundings, for in addition to the ordinary telephone connection with the central station of the system, a number of mills are equipped with telephones leading from the overseers and superintendents of various departments to the main office, and there by means of the small switch-board, they can communicate with each other. An arrangement of the kind has been found to be of the greatest utility in the saving of time and also prompting the more rapid and absolutely confidential transmission of messages between various portions of an establishment. In case of fire, the telephone would serve a most important and valuable purpose; not merely in giving the alarm but accompanying it with more detailed information than would be possible by an alarm bell, and at the same time affording a vehicle for receiving orders transmitted over the wire.

In the textile manufacturing, regularity of speed is essential in obtaining uniformity of fabric in various processes of production, and the manager can at any time ascertain the velocity of the various water wheels, or engines, by moving a suitable electric switch in the office, and the impulses caused by the revolution in any one of the prime movers in the establishment.

A number of switches are in this manner arranged to throw in various circuits and the impulses received from any one of the engines or water wheels, and the record of the motion accomplishes more than merely affording an opportunity of hearing sounds concurrent with the revolutions measured; but in combination with the clock work the electric impulses are used in connection with an escapement for one minute so that the special dial on the clock will record the number of revolutions made during one minute. In this manner a few moments time serves as a means of obtaining an inspection of the work of all prime movers in a large establishment comprising a number of different mills.

On passing into the mill, the visitor is at once impressed with the extent of the precautions taken against fire; and in this matter electricity is of paramount importance in the protection against fire where the value of a few seconds in its incipiency will determine whether the fire is to become a trivial matter or a disastrous conflagration, and it is here that electricity plays its great part, in the saving of seconds.

In addition to the ordinary fire alarm box, whose station is placed at some salient part in the yard, there are other manual stations connected with it at various points in the mills where any person by taking a suspended hammer can break open the glass covering a manual alarm, and in this way transmit a warning to the fire alarm in the yard.

Within the mill there is another class of fire alarms entirely of an automatic nature, which are operated by a rise in temperature to some predetermined point above the normal heat; the usual temperature selected for this purpose being 120 degrees.

This will affect the thermostats so that the electric circuit will be opened or closed, according to the nature of the system employed. Some of these thermostats are operated by the expansion of mercury or by the dissimilar expansion of two metals, others by the fusion of a joint or link of alloy fusing at 162° Fahrenheit. Later forms use the expansion of a reservoir containing either a hydro-carbon or some other liquid volatile at the desired temperature.

A great deal of ingenuity has been spent, both on these thermostats and the whole electrical system with which they are connected, with a view of obtaining promptness in the operation of the thermostat and also that the electrical organization of the system shall be so arranged that it shall not be impaired without notice by deterioration of the battery, interference with the wires, by accident or malice, and at the same time to prevent the sounding of false alarms. The question of thermostats cannot obtain other than a passing reference in this connection, merely stating that the practical results are of a most satisfactory nature.

The alarm from the thermostats is also localized by visual numbered tags as in an ordinary annunciator, in addition to the sounding of the alarm, so that the fact of the fire and its detailed location is promptly announced in the office or the headquarters of the watchmen. A recent instance of a hot bearing on the machinery of an elevator, showed the delicacy of these fire alarms, for a thermostat caused an alarm to be sounded before the bearing had become hot enough to produce fire; and an automatic sprinkler near by was not opened as the heat radiating from the warm bearing was merely sufficient to cause the thermostat to sound the alarm in advance of the occurrence of fire. Thermostats are also used in connection with electric apparatus to indicate where the temperature of main journals exceeds the usual temperature, and in this manner give warning of conditions tending to produce hot bearings.

Electricity is also used in connection with the automatic sprinkler systems which are in universal use for the protection of such property; for in some instances it is not feasible to allow the water to remain in these sprinkler pipes during the winter months on account of the danger of freezing in buildings which are not artificially warmed, and one of the methods in such cases is the use of electrical apparatus which will cause a valve to be opened and water let into the pipes whenever the temperature of the room rises sufficiently to open any one of the sprinklers.

On account of the many contingencies and necessary mechanical complications from the various dry pipe systems hitherto in use, it has been found preferable either to warm the buildings in winter, or even shut off the water altogether during cold weather than to rely upon automatic appliances which introduce such mechanical complexities into the matter. It is in this direction that there is a fine chance for inventors to produce an article for which there is an extensive demand which has not been met by any of the numerous devices produced for this purpose.

Digitized by Google

Mills are patrolled by watchmen on an hourly circuit day and night for the year round, and the record of such work is made by electricity as the watchman visits the several stations, which are so arranged that it will record the patrolling of the whole of the predetermined route which will oblige him to traverse the whole of the property entrusted to his care.

There are two classes of these electrical watch clocks, both of which make their records upon circular paper dials which can be filed away and used for reference, showing the time at which each station was visited. One class of these clocks use a circuit for each station and the closing of the circuit by an ordinary push button or its mechanical equivalent which causes a perforation, pencil mark or stamp number, upon the paper dial in the position indicated by that of the registering device on that circuit; while the time at which such a registration is made is indicated by the circumferential position of the paper registered when the circuit was closed.

The other class of electric watch clocks use an arbitrary broken circuit, corresponding to the strokes of the fire alarm; instead of ringing a bell, it perforates the numbers upon a circular paper disc revolved by clock works. These paper discs in both instances are measurable alike, being attached to some portion of the clock mechanism which revolves once in 12 hours, and with suitable radial and circumferential lines, so that the locus of the various perforations may be readily determined and the position is more easily noted by bordering the paper dial with figures representing the hours, similar to the clock dial.

One of these watchmen's electrical clocks requires no battery, the electricity being generated by the magneto operated by the watchman in the act of making his record at the several stations.

In some cases the watchmen's clock is placed at the headquarters of the district telegraph company, and if the watchman is fifteen minutes late at any of the stations in the mill, an alarm bell at the mill is rung from the district telegraph, and if no answer is signaled back by the watchman a policeman is summoned to the mill on the presumption that assistance is needed. Of two instances where such delays occurred, in one the watchman had been hit by a rock thrown through a window and was lying insensible, and in the other he was in a dying condition from a fit, and medical assistance was summoned barely in time to save his life.

It is quite possible that the arrangement may seem complex to those not personally conversant with its details; but the contrary is the case; a very few patents seem to control the whole business.

Considering other matters of electrical applications in a mill, the first and most valuable is that of electric illumination which has been of great value wherever used, by affording a perfect lighting when arranged with good judgment, which gives results comparable to that of the day light; allowing the suitable distinction of colors by the flood of light furnished, enabling the detection of imperfect work at the time that it occurred in the process of manufacture, keeping the health of the operatives in better physical condition, an advantage alike to humanity and also to the more sordid demands of manufacturing; and in every respect seems to relieve manufacturing from the disadvantages attendant upon artificial light.

In certain classes of textiles there is known to the trade a difference between the quality of summer and winter goods; a distinction which owes its origin, not to questions of temperature, but solely to the fact that during a large percentage of the hours of labor in winter artificial light is used, while in summer it is not used at all.

Electricity is also used in the course of manufacturing in several devices which are of great importance in the production of perfect cloth; as in the first drawing out of cotton as it comes from the card before any twist has been applied to it, one of the most efficient eveners is operated by electricity. In the warping room where a breaking of the thread, if undiscovered, would be an injury to the fabric, the mechanical alarms for such mishaps have been to some extent displaced by more sensitive and accurate electrical alarms; and in the weaving room there are devices recently introduced, in place of the mechanical arrangements formerly used for the purpose, by which a broken thread is immediately made known and the loom automatically stopped.

There are other matters of great importance in the manufacture of textiles in which it is assumed that electricity will eventually be of far greater recognized importance than at present.

In the operations of dyeing and bleaching, not to mention the chemical processes for supplying the agents which are there used, it can not be otherwise than that electricity will in the immediate future occupy a very much larger field in that department of industrial chemistry.

A few years ago careful experiments were made in the attempt to bleach cotton fabrics on a large scale by means of ozone, generated by means of an induction coil, but while the results were never pushed to commercial sequences, the manager of the bleachery, a gentleman who has received the advantage of chemical instruction in some of the best European polytechnical institutions in addition to the practical experiences of many years in this country, always felt confident that this method of bleaching would eventually be found to be the cheapest and most desirable method.

There is a class of troubles of the most serious nature in textile mills arising from the static electricity generated by belts, and especially during the operations of spinning; at certain states of the atmosphere, these difficulties become more aggravated and are sufficiently severe at times to cause the operation of the mill to be unprofitable or not even feasible; for instances have been known where it was actually necessary to shut down the mill on account of the dog days.

The success of those communities such as Oldham, in England, where cotton manufacturing has proved to be extremely successful and always at an advantage over their competitors elsewhere, has been shown to be due to the uniformly favorable electrical condition of the atmosphere in these places.

At times the productions of paper mills becomes charged with static electricity and retain the charge for a long time like any other condenser. It is very difficult to use such paper in printing presses, because the paper will fly towards the conductors formed by the metal parts of the press, the loss by rumpled sheets reaching as high as 50 per cent.

In citing some of these elements in which electricity forms a part in relation to textile and paper mills, I do not perceive how this article could be made more useful than perhaps to stimulate some mind to a successful treatment of the difficulties arising from the generation of static electricity in mechanical processes, a problem, whose solution would be of more advantage to the textile industry in the United States than any invention since the days of Arkwright.

A COULOMB METER OR INSTRUMENT FOR MEASURING THE CONSUMPTION OF ELECTRICITY.[1]

BY PROFESSOR GEORGE FORBES.

You all remember that in England, at the time when electric lighting took a decided start, there was a regular rush for lighting-up towns by central station lighting. I looked into the matter at that time, and I could not see that a single scheme that was then proposed was capable of being worked. We were absolutely ignorant at that

1. A paper read before the American Institute of Electrical Engineers, Oct. 11, 1887.

Digitized by Google

time of the methods of distribution of electricity. In the first place we were absolutely ignorant of what amount of current we might pass through different-sized wires. One had to go all through that, and work out that programme, before one started upon anything. Then the different systems of distribution which had been proposed had to be discussed in each particular case, to see which was the most useful, and perhaps you will remember that I myself came to the conclusion, at that time, that a direct supply on a multiple arc system, which was that in most general vogue in those days, could not be carried out on economical lines to a distance of more than 220 yards; and when the three-wire system, the next decided advance, was introduced, it extended the distance of economical working to about a quarter of a mile. The greatest step, it seems to me, which has been taken in the distribution of electricity since the period when electric lighting took such a start, in 1878, is the use of alternating currents with induction apparatus, which was achieved by the most indefatigable industry and plucky perseverance, against the opinions of everybody who seemed to be capable of giving an opinion. I have never omitted, on every occasion when I have had to speak about the distribution of electricity, to express the profound admiration I have had for the energy and pluck which was shown by Messrs. Gaulard and Gibbs in working out that system, upon which so much ridicule was cast during the whole period of their experiments. At the present moment, the only difficulty which has seemed to exist in the way of a general system of distribution, lies in the want of a meter for the purpose. It is all very well to do as we are doing just now—to charge people for lighting their houses the same price that they used to pay for gas, or to charge them at so much a lamp and let them burn all night long, or just as much as they please; that is all very well as a makeshift. But every one of us knows perfectly well that that cannot go on forever; and therefore we must have a meter for measuring the consumption of electricity in houses. With a direct or continuous current, such as has been generally used in the ordinary multiple arc system, or in the three-wire system, the problem is not a very difficult one, and has been solved with greater or less simplicity, with greater or less accuracy, in a variety of ways. But even in that system it has always been felt that there was great room for improvement over anything which has been done. In using alternating currents, however, there has been until lately, at any rate, absolutely no meter in existence which was capable of giving, with even a fair degree of accuracy, the consumption of electricity in a house.

I believe that the meter which I present before you this evening is as simple in construction as any meter can be which requires wheel-work to indicate the amount of electricity which has been used. It has wheel-work, just as a gas meter has wheel-work, so as to indicate upon dials, by means of indexes, the exact number of units of electrical energy, just as a gas meter measures the exact number of feet of gas which have been consumed. But, in making this comparison between the gas meter and the electric meter, you must not imagine that they are to be put upon a par with each other. The gas meter has become a proverbial instrument, not for the great accuracy with which it performs its work, but for totally different qualities, from which I trust the meter before you is wholly free.

During all the time I have acted as an electrical engineer, my chief interest has been in the development of systems of electrical distribution from central stations. Until this plan is generally adopted we cannot hope to have the electric light supplied economically. The advances which have been made of late years have rendered the general distribution of electricity, even to great distances, an accomplished fact and a solved problem. Only one difficulty was encountered—the want of a meter for measuring the amount of electricity used by the consumers. In the old method of distribution (in parallel) the current always flows in one direction, and even here the want of a good and simple meter is felt. But in the modern system of distribution by alternate currents, no meter has hitherto supplied the want. Nearly a year ago an American in England spoke of the thing as impossible, and defied me to produce one. That same evening I went home and tried a simple experiment, which convinced me I had found a solution of the problem. Of all the effects of the electric current, I was sure that the only one which would suit alternate currents was the creation of heat in a conductor. The experiment I tried was to cut a circular disc of paper into a spiral, and to support this spiral at its centre on a needle-point. Holding this in an upward draught of air, the spiral rotates. I tested this, and found that a very feeble amount of heat sufficed to produce this effect. I then put some wire under the spiral and passed an electric current through it, and found that the spiral moved with an extremely small consumption of electric energy. From this beginning, after nine months' incessant work, I evolved the coulomb meter which I now exhibit. From this work has resulted the simplest and most accurate meter conceivable, which is equally suitable for continuous or alternate currents, which is read off by indexes and dials like a common gas meter, and which, when set in place, never needs to be touched, the readings being taken simply from the dials.

There are four dials in the latest instruments, reading units, tens, hundreds and thousands. The unit I adopt is the English Board of Trade unit, measuring the electric energy consumed in a hundred-volt lamp using one ampere of current for ten hours, the cost of which unit may be a little less than ten cents in a good system of distribution. When the inspector goes his rounds each quarter of a year he reads off the indexes, and subtracts the reading of the last quarter, and so he has directly the number of units consumed. If the lamps be not of 100 volts, he must multiply his result by the volts, and divide by 100 to get the number of units of electricity used up in the quarter year.

I would say that the board of trade unit is equal to a thousand revolutions of the mill-wheel. This instrument is made to work up to 20 amperes, and it might work twenty hours a day for four or five months before the readings of the instrument would be exhausted.

The instrument is ridiculously simple, and consists of four parts: (1) A mill-wheel (or smoke-jack as Sir Frederick Bramwell has called it); (2) a wire under the mill-wheel which creates an upward current of air when the electric current goes through it and heats it; (3) wheel-work for counting the number of revolutions of the mill-wheel; and (4) dials and indexes for reading off the number of revolutions.

The mill-wheel consists of eight mica vanes fixed by pieces of pith to the circumference of a circular disc of mica, at an angle of forty-five degrees to the horizon. This disc of mica has a circular hole in the middle, where it is supported by a thin paper cone, apex upward. At the top of the cone there is a jeweled cup, fixed inside a pinion. The jeweled cup rests on a point fixed to the base of the instrument.

The wire which is to be heated by the electric current is of iron, and forms a flat spiral of four turns just underneath the vanes of the mill-wheel. The ends of this wire are attached to one of the wires carrying electric currents to the lamps.

The pinion on the cone of the mill-wheel works in a train of wheels, so as to reduce the speed. One thousand revolutions of the mill-wheel indicate one unit on the dials.

Each of the dials has ten divisions. The entire instrument is placed under a cover, to keep off dust and irregular currents of air.

The instrument, as now made, starts with half an ampere, and is fairly accurate with three-quarters of an ampere (the amount of current generally used in an incandes-

Digitized by Google

cent lamp). From two lamps up to thirty lamps, the speed of revolution is exactly proportional to the current passing.

The same identical instrument will indicate from 20 to 600 lamps with the same accuracy. This is done by diverting part of the electric current from the meter by a shunt wire, so that only one-twentieth part of the whole current is measured.

If I want to measure from one lamp to 600 lamps, I use two meters, one with and the other without the shunt. With small currents only the meter for thirty lamps is connected. When the current for thirty lamps is passing, it is strong enough to act on an auxiliary apparatus which allows the greater part of the current to pass through the second meter. The two meters are then in parallel. This auxiliary apparatus is an electro-magnet, with a coil of twenty turns of wire going to the first meter and one turn going to the second. When the current is strong enough it pulls down a lever, which makes connection with the second meter, and holds it there as long as it is wanted.

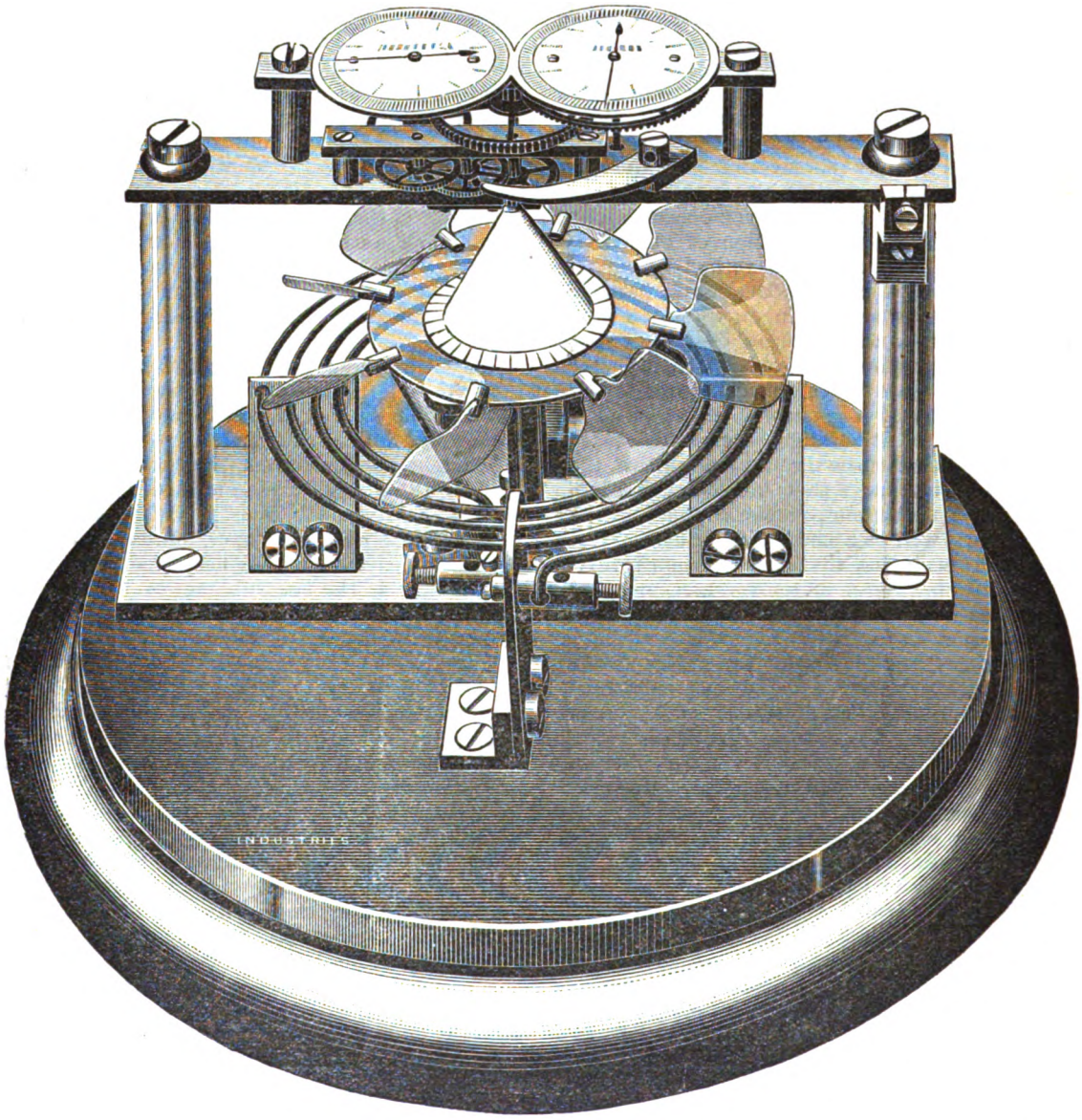

The want for such a meter has long been felt. Neither consumers nor suppliers of electric light and motive power can be satisfied with a price determined solely by the number of lamps in a house, and not by the hours of consumption. The meter must be simple and cheap, and must be readable by the consumer, as well as by the supplier of electricity. These conditions are all fulfilled by the meter I am exhibiting to you.

In isolated plants, where storage batteries are used, this instrument enables us to see how much electricity is put into the batteries, and how much they give up.

In distributing motive power by electricity it is quite impossible to charge the consumer by the number of motors, because the time he is actually running the motors may be very variable. A meter is indispensable.

I may now refer you to the table on the black-board, showing the indications of the instrument, from which you will see that the ratio of speed to current is practically constant:

Current in amperes.....	.25	.35	.45	.6	.75	1	2	3	6	12
Ratio $\frac{\text{current}}{\text{speed}}$..	76	61.2	50.4	51	50.7	51	51	50.7	51	51.6

I cannot conclude this description without acknowledging the generous enthusiasm, free from all jealousy, with which this meter was received by English electricians when I showed it for the first time—namely, last month—at the meeting of the British Association at Manchester.

Digitized by Google

I must say that the kind sympathy of these eminent men went to my heart. May I be allowed to quote the remarks of one or two, from the London *Electrical Review*, Sept. 23?

Sir William Thomson said, "I have very great pleasure indeed in congratulating Professor Forbes. Every one who knows anything about electric lighting understands perfectly that the want of a meter is one of the greatest practical wants in connection with the introduction of central station lighting. I speak feelingly on the subject, for I have tried, year after year, to produce a meter. There is nothing to which I have given up so much time in endeavoring to make an instrument work as in endeavoring to produce an electric meter, and the patent office contains records of some of my attempts. Each one of them has been to some degree capable of giving a result, and the last of them, which I worked at a very great deal till four months ago, promised considerable accuracy, and was perfectly available for either direct or alternate currents. But the difficulty of seeing a way to bring this instrument out, and to make it a practical thing at a moderate cost, for general use, was so great that I do not feel that I intend to go on with it at all. It is just possible that I might make it succeed as a meter for a large station. But I am exceedingly glad to see the great success which Professor Forbes has obtained. I think I may say I am untinged with any feeling of regret at its having been done by another. On the contrary, it is with the most unmixed feelings that I say I am exceedingly glad, and that Professor Forbes is to be congratulated."

Professor Perry said, "One has no right to ask an inventor of such a beautiful instrument as this by what means he arrived at the idea embodied in it. I could not have imagined that he could have got this result. The figures certainly show that it is a beautifully simple instrument, and effects its purpose well. But how any one could arrive at such a method from any theoretical information passes my understanding. The whole action seems to be so complicated. I do not think I should have tried it if the idea had come into my head. I suppose one must miss a tremendous lot of valuable things in this way, because one does not see the theory. It is a marvelous thing. I certainly think it is one of the most beautiful things we have had before us for a long time. I speak now as an inventor of a meter which is in considerable practical use, not in this country, unfortunately, where it is patented, but in Germany. That is also a very simple one, but I think that this beats it."

I will not trouble you with further quotations. I can only say that I was deeply touched by the sympathy of other inventors, and that the reception I met with in England led me to take this opportunity of showing the instrument to you on this side of the Atlantic.

THE ELECTRIC CURRENT.

BY PROFESSOR F. C. VAN DYCK.

READERS of Prof. Ayrton's admirable book, "Practical Electricity," will see on page 2, a statement of that author's views as to what the electric current is *not* like.

It appears to me worth while to say something on the other side of the question, pointing out a basis of analogy between the electric current and what may be called a sound current. What follows refers to a single experimental fact, viz., that the energy developed (as heat, for instance) in an electric circuit varies as the *square* of the current in that circuit. Or, it may be put in this form, viz., the energy expended in maintaining difference of potential varies as the square of the quantity of electricity transferred from higher to lower potential.

How does this fact accord with the various hypotheses as to the nature of current? In the first place the electric current cannot be regarded as analogous to a current of *water*, for the energy of a water current varies as the cube not the square of the current. This is so important in this connection that I venture to give a brief statement of the reason for the fact, by way of reminder.

To say that the energy of a water current varies as the cube of the current, because one must maintain n-square-fold head to get n-fold flow does not *explain* the matter, but really states it from another standpoint. The real explanation is to be found in the character of the flowing substance. Water is practically incompressible, that is, its volume is independent of the pressure causing flow. Hence to get n-fold current from a given orifice or tube we must force n times as many volume-units (drops) out in a given time. Therefore each volume-unit must be made to travel n times as fast as it did when unit current flowed. Consequently, each volume-unit has n-square energy, and, as there are n times as many of them traversing the orifice or tube, the energy of the n-fold current must be n-cube-fold the energy of unit current.

Now, water acts as a vehicle of energy by virtue of its *mass*.

If, then, electricity is an "incompressible fluid," how does it come to pass that the energy of the electric current varies as the *square* instead of the *cube* of the current? Is there any way to explain it on the assumption that some other property than mass is efficient in the case?

In the second place, the electric current is plainly not a flow of "energy," for it cannot be that the energy of a current of energy varies as the square of the current.

In the third and last place, let us see how far an electric current is analogous to a sound current.

The idea can be given by making some suppositions and drawing inferences from them. Suppose, first, that the human ear were sensitive to sound of a given pitch only, and that sound had become a commercial quantity, transferred by conductors. A meter could easily be constructed to measure amplitude of vibration, and so "current." If the apparatus at the transmitting end of the line were worked by a spring suitably mounted, energy would have to be used to keep the spring at the requisite "potential." On these suppositions we should have—

(1) Current proportional to potential.
(2) Energy required to maintain potential proportional to the square of the current.

Just as we have in the case of electricity. It is established that static electrification is closely allied to elastic stress, and why may it not be that dynamic electricity is amplitude of vibration of some medium or media? Perhaps the difficulty of making detailed descriptions of the mechanism of the operation may be insurmountable, but it can only be profitable to insist that such a fundamental fact as the relation of current to energy must be taken into account in our theorizing.

DYNAMIC ELECTRICITY.

BY CARL HERING.

(Continued from page 389.)

CHAPTER IX.—REGULATION OF MACHINES.

THE simplest and often the most convenient way of regulating or adjusting the current or potential which is generated by a machine, is to move the brushes toward or from the neutral line. It has been shown in chapter iv that the halves of the continuous winding of an armature are connected in multiple arc with each other, and that the total electromotive force generated in each half is equal to the sum of the electromotive forces of the separate coils in that half; if, therefore, the brushes are moved away from the neutral line, say a distance equal to the width of one commutator bar, it is evident that one coil on each side of the armature will thereby have been switched from one

Digitized by Google

side to the other of the line joining the brushes (see figures 6 or 8, chapters iv. and v). As the direction of the induced current will tend to remain the same in these two coils, it will evidently be opposed to the other coils as now connected, and will therefore diminish the available electromotive force at the two brushes. For instance, if there were 64 armature coils and if each coil generated three volts, there would be 32 coils in series in each half, giving $3 \times 32 = 96$ volts; if now the brush be moved the width of one commutator bar, there would be 31 coils left, generating 93 volts, but these would be opposed by the three volts of the coil which was added, thus leaving 90 volts. This will continue to decrease by continuing the displacement of the brushes until they have been moved through 90° when the coils will all oppose and neutralize each other. In actual practice the results would be modified somewhat, quantitatively, as the electromotive force induced in the coils near the neutral line is generally less than in the others, thus making the regulation more gradual at first; furthermore, the direction of magnetization of the armature by its own current, will, of course, follow the movement of the brushes, and therefore will tend to move the neutral line in the same direction; but in well built armatures with few windings, this effect will be small if at all appreciable, as the magnetization due to its own current will be small as compared to that due to the field.

This method of regulation is evidently equally well applicable for adjusting the current in the external circuit, as well as the electromotive force, for the former may always be regulated by proper adjustment of its electromotive force. It is furthermore evident that by thus diminishing the electromotive force or current, or both, a nearly proportionate amount of power will be saved, as the opposing electromotive force does not generate an opposing current, and therefore no energy is required by it. This can be shown by moving the brushes through about 90°, in which case no current will be generated and the dynamo will run light, that is, without consuming power.

An objection to this form of regulation, and one which makes it prohibitive in most cases, is that it generally causes very bad sparking when the brushes are too far from the neutral line. It is well known to all who have adjusted the brushes of a dynamo, that there is one definite position, and generally only one, in which there is least sparking, and that the sparking is increased by altering this position. This is partially due to the fact that at least one coil is continually short circuited by each brush, and when the brushes are moved too far from the neutral line this coil, instead of being "dead," that is, without an induced electromotive force in it, is "alive," that is, has electromotive force induced in it, and therefore on being short circuited, it will have a more or less great local current circulating in it, which, even if the electromotive force is small, may be very great, as the resistance is small; when this current is broken at the end of the brush, it evidently will spark more or less badly.

This method of regulation, when not accompanied by any regulation of the field, is therefore not to be recommended, except for small machines in which the sparking is not objectionable, or for machines with many armature windings and weak field in which the neutral line will shift with the brush line, or in such inferior machines in which the sparking is very bad in all position of the brushes, or in such machines as the Thomson-Houston in which the evil effects of the sparking are avoided to a great extent by a blast of air between the commutator bars.

It may be remarked here that the position of the brushes which gives least sparking, is not always coincident with the position for greatest electromotive force It is evident that they should always be adjusted to the former and not to the latter, which may always be accomplished by determining the winding of the magnets as described in the last chapter.

The second method of regulating the electromotive force, and therefore the current, is to vary the speed of the dynamo, but as this is in most cases impracticable, it need not be discussed here. What was said in previous chapters concerning the effect of the speed will enable one to determine the amount of the adjustment; for instance, the effect of a certain change of speed is much greater for a shunt than for a series machine, under certain conditions in the external circuit. A change of speed may in many cases be accompanied by a change of position of the line of least sparking, and should in those cases be accompanied by a change of position of the brushes.

A third method of regulation is to use a variable dead resistance in the external circuit, which will absorb a certain amount of energy, thus enabling the rest of the energy, that is the useful part, to be adjusted. As this method wastes energy, its general use is not to be recommended, but in certain special cases, belonging more particularly to the subject of systems of distribution rather than dynamos, there are advantages gained by this method which cannot be attained as readily by other methods, or in other words, the advantages gained are commensurate with the cost of the wasted power. To calculate the most economical form of such resistances, proceed as follows: determine by calculation, or preferably by trial under actual working conditions, what the difference of potential, V, is, which must be absorbed by each of the successive adjustments of the resistance; also the current C, which flows through the resistance in each case; the quotients $\frac{V}{C}$ will be the resistances. If german-silver wire or flat bands are to be used, their cross-section is next determined from the heating limit. If convenient and reliable formulæ are at hand this may be calculated directly, the necessary length being then readily determined from this cross-section, the resistances $\frac{V}{C}$, and the specific resistance of german silver. But in the absence of such formulæ, or if the specific resistance of the german silver (which varies greatly) is not known, the following experimental determination will be found reliable and simple: Take as long a piece as convenient of the wire or the bands of which the resistances are to be made, measure its length, and mount it as an open spiral or otherwise, as it is to be mounted in the finished resistance. Pass a current through it from a dynamo or battery, and increase this current slowly until the wire has been raised to as high a temperature as is permissible, allowing sufficient time for the temperature to attain its greatest value; then measure the current c, passing through it, and the difference of potential v, at the terminals of the wire. The length of the wire (of the same cross-section) for the required resistance which is to absorb V volts, will then evidently be, V divided by v, and multiplied by the length of this trial piece; the number of such wires which must be placed in multiple arc in the resistance for the current C, is evidently C divided by c.

By mounting this trial wire in different ways, and raising it in each case to the same temperature, the most economical method of mounting may readily be determined; the object is, of course, to present as much surface to the free access of air, as possible. Up to a certain limit, differing under different conditions, it will be found to be more economical to use a larger number of small wires in multiple arc, rather than a smaller number of larger wires.

This method of experimentally determining the resistance wires, applies only to those cases in which the wires are all of the same size as the test wire, their number in multiple arc being then made proportional to the current. If different sizes of wire or bands are to be used, they must be calculated by means of the well-known heating formulæ for wires. In many cases the following modification of the formula will be found convenient for round wires: Make the same test as before, with any convenient

Digitized by Google

wire, measuring merely its diameter, say in mils, and the maximum current. Cube this diameter, and divide it by the square of the current; this will give a number or constant, which can be used to calculate the diameter of any other wire of the same material, but for a different current which will not heat it to a higher temperature than that of the test wire. For instance, if C, be any other current, square it and multiply it by this constant, the cube root of this will then be the diameter in mils, which the wire must have, in order to carry this current and not to heat any more than the test wire. The required length of the wire is then determined from this cross-section and the resistance which it must have.

If bands of different width, but of the same thickness are used in place of wires, the width should be proportional to the current. If they are of the same width but of different thicknesses, the thickness should be proportional to the square of the current. This shows that it is much more economical to use bands as thin and as wide as possible.

The fourth and most common method of regulating the electromotive force or current of a dynamo, is to vary the strength of the magnetizing current or the ampere-turns of the field magnets. The method of effecting such adjustments of the magnetizing current will evidently be different according as the machine is shunt, series, or separately excited, and also whether the machine is to be regulated for constant potential or constant current. In all these cases, the electromotive force of the machine, but not necessarily its current, will be nearly proportional to the magnetizing current, provided the magnets are not oversaturated; in the latter case the strength of the magnetizing current must be varied through a greater range, to produce the same change in electromotive force. The current in the external circuit will, of course, depend on the resistance of the circuit, and on the electromotive force, and must therefore be adjusted for different resistances by varying the electromotive force.

Separately excited machines are regulated by adjusting the current strength of the exciter. This can be done by a variable resistance in this exciting circuit, or better, by regulating the field current of the exciter itself by any convenient method. The former does not waste much power as it consumes only a fraction of the energy for the field current, which latter is itself only a small fraction of the total power.

Shunt machines are regulated by an adjustable resistance in the magnet circuit. If the machine is to be regulated for constant potential, as when used for incandescent lamps in parallel, the amount of this regulation is dependent on the resistance of the armature, and will therefore be small for low resistance armatures. The amount of this resistance is most readily determined by an actual trial, that is, by running the machine first with full load and then with no load, and adjusting in each case any convenient resistance in the magnet circuit until the difference of potential at the poles of the machine is normal. Measure these two resistances, as well as the current which flows through them. The smallest allowable cross-section for the resistance wire is then determined from this current, as described above, and its total length is then calculated from this cross-section and the total resistance. The wire is then mounted so that successive parts of it may be switched into the magnet circuit, the number of such parts (usually from 10 to 20) depending on the desired nicety of the regulation. As the variation in the current through this resistance is comparatively small, one size of wire will usually suffice for the whole resistance; if, however, the current varies considerably, it will be more economical to use different sizes of wire for different parts; they may be calculated from the heating formula given above. Such machines are usually wound as described in the last chapter, so as to enable some resistance to be placed in the magnet circuit even at full load, for the purpose of adjusting for slight irregularities, such as the heating of the magnet coils, lowering of the speed of the engine, etc. The variation required between full and no load is of course due to the difference between the electromotive force and the difference of potential, as described before, and therefore depends on the armature resistance. The energy wasted in the resistance is insignificantly small.

If the shunt machine is to be regulated for constant current with consequent great variations in electromotive force, as for instance an arc light machine for a varying number of lamps, the determination of the required resistance is best done experimentally as described above, only that it must be determined for a large range of values, and not merely for the two extremes. The reason for this, is that this resistance does not vary in proportion to the electromotive force, as the latter will itself vary the current in the shunt magnet circuit. It may even be found that the resistance must be varied first in one direction and then in the other, for regular diminutions of the electromotive force. The current in the magnet circuit should also be measured, and if it varies considerably, the resistance wires may be made of different sizes for the sake of economy. The successive steps of the adjustable resistance may have relatively different values to effect a regular increase of electromotive force. As shunt machines for such high potential as would be required for many arc lights in series would necessitate the use of a very large amount of quite fine wire for their magnet coils, they become very expensive and are therefore not used very much. They possess no particular advantages over the ordinary series machines if the latter are, as is usually the case, automatically regulated, and therefore not subject to the destructive effects of the unavoidable short circuits in the external circuit.

Shunt machines may also be regulated by winding the magnet coils in independent sections; by means of a switch-board to which the terminals are attached, these sections may be successively cut out or switched into the circuit, thus varying the ampere-turns of the magnets. But as this complicates the construction greatly and has no particular advantage over the other method, it is not practiced to any great extent.

Series machines for constant current may be regulated by winding the magnet coils in sections as just described, but the same objections apply here as well. A modification of this, is to solder smaller branch wires to different parts of the coils and by means of a suitable switch-board, to which these wires are led, short circuit the successive sections. But though this is an improvement of the method, it possesses in general no particular advantages over the next method to be described. In some particular cases the advantages may be sufficiently important to justify its preference over other methods. In such cases, care should be taken to cut out the successive sections so as not to unbalance the field.

The simplest and most usual method of regulating series machines is to use an adjustable resistance as a shunt to the magnet circuit, that is, to connect an adjustable resistance between where the main circuit enters and where it leaves the magnets. The successive steps of such a resistance may be best determined by an actual trial with any convenient resistances, which are afterwards measured and serve to calculate the length of the resistance wire. If the magnets are not over-saturated the resistances may be calculated (knowing the resistance of the magnet coils), so as to shunt off such portions of the main current as will leave the magnet current proportional to the electromotive forces to be generated. But owing to the fact that the unknown self-induction of the magnet coils acts to increase their resistance, and also to the fact that the brushes will in many cases be required to be adjusted together with the field, owing to the shifting of the neutral line, such calculations will not be very reliable, and it is therefore best to eliminate all such inaccuracies by an experimental determina-

Digitized by Google

tion. In this test the current which is shunted around the magnets and through the resistance, should be measured for each successive step, and from this the cross-section of the resistance wire is determined by the heating limit, as described above. This current will vary from almost nothing for the maximum resistance, to almost the whole main current for the smallest resistance, thus requiring quite different sizes of resistance wires for different steps of the regulation. Machines regulated in this way may readily be adjusted to maintain a constant current even for a short circuit. The energy wasted in this resistance being a fraction of that used for the magnets is not significant.

Series machines might also be regulated in this way to maintain a constant potential for variable currents in the external circuit; but a simple calculation for an actual case will show that in order to maintain the constant potential for a small current in the external circuit, the field magnet coils would have to be wound with comparative small wire, and that, therefore, very much current would have to be shunted through the adjustable resistance when the current in the external circuit is a maximum. This would necessitate resistances of large size, and would waste considerable energy when the machine is doing its greatest work. Such a system should, therefore, if used at all, be limited to cases in which the range of adjustment is quite small, as for instance to machines which are used with a nearly constant load of lamps. The advantage of such machines over a shunt machine is evidently the saving in the cost of the wire and winding of the magnet coils. For a comparatively high resistance armature there will be less regulation required for constant potential; this method is, therefore, applicable best for small, cheap machines for nearly constant loads.

All the methods of regulation described may be made automatic by the addition of a proper mechanism which automatically alters the resistances, position of brushes, etc. Such regulators consist essentially of two parts, first, the detector, the object of which is to detect changes in the potential or current which is to be maintained constant, and second, the mechanism which is actuated by this detector and which effects the necessary changes in the resistances, sections of coils, brushes, or speed. Numerous more or less effective automatic regulators of this kind have been devised, some of which have proved to be very satisfactory. As they have been described in detail in text books and periodicals, it is not necessary to repeat the description here.

(*To be continued.*)

SKETCH OF THE PRINCIPAL ELECTRICAL PAPERS READ BEFORE SECTION A, DURING THE LATE MEETING OF THE BRITISH ASSOCIATION AT MANCHESTER, 1887.[1]

BY PROFESSOR OLIVER J. LODGE, D. SC., F. R. S.

It may serve a useful purpose, and be not uninteresting in itself, to pass rapidly under review some of the communications made to the physical section of the British Association at its recent sitting, to sketch what appear to be the main objects of each paper, and to indicate as far as one can its net result. In attempting this it must be apparent that such a sketchy account cannot avoid being meagre and in many respects unsatisfactory; but inasmuch as sooner or later the publication of each paper will take place, and the complete views and intentions of the author can then be appreciated, no harm will be done by a partial and crude preliminary abstract.

The simplest order in which to quote the papers will be that in which they were read.

Immediately after the president's address on Thursday, Prof. Schuster described his new experiments on the electric discharge in vacuum tubes. He finds that if a discharge be sent through air rarefied to a pressure of a millimetre of mercury or thereabouts, the whole of the air in the vessel becomes conducting; so that, for instance, a gold leaf electroscope inside the vessel is unable to retain the slightest charge while the discharge is passing, and a single cell battery is able to propel through several inches of air a steady current capable of deflecting a galvanometer perceptibly. And this happens whether the discharge be a continuous one as from a powerful battery, or an intermittent one as from a common induction coil. Moreover, it happens when the discharge region is partitioned off by a good electrostatic screen from the region of the gold leaves or weak battery circuit terminals. All that is necessary is that the partition shall not be a complete one in the mechanical sense, it must permit the passage of *air* round or under or through it, but it may be as complete in the electrical sense as a sphere of fine wire gauze or as a plate of sheet metal.

The meaning of the experiment is believed by Dr. Schuster to be that the air is dissociated by the discharge into atoms respectively oppositely charged, and that these charged atoms wandering about are able to convey a current of electricity between electrodes exactly as they are supposed to do in the case of an ordinary liquid electrolyte.

Anyone who is not familiar with the appearance of a continuous battery current through a vacuum would be much struck with the beauty of this form of the experiment.[1]

Later in the day Prof. Horace Lamb hastily gave the gist of a paper on a subject which has an electric as well as a hydrodynamic bearing. When water or other fluid flows through a tube, it is well-known that the stream is most rapid at the axis of the tube, where it is freest, and most retarded near the walls of the tube. This is a natural result of friction and fluid viscosity. But the question arises whether the layer of fluid which actually touches the wall of the tube moves at all, or whether it clings so tightly as to be actually and completely stationary. Certainly water adheres to glass with considerable force; the inside water is sheared along the outside water, but is the outside water sheared along the glass? is there, in fact, any "finite slip"? The simplest and ordinary procedure in hydrodynamics is to assume none: to treat the outermost layer of water as stationary. But now comes in the electrical contribution to the subject. Prof. Wiedemann and others have observed that an electric current sent through a tube of liquid tends to propel that liquid bodily along the tube. This is called electrical endosmose. Prof. Quincke, on the other hand, has observed the converse phenomenon, viz., the fact that if a current of water be driven mechanically along a tube, its two ends acquire different potentials and can deflect an electrometer. Both these effects have been explained by Prof. von Helmholtz as due to a contact electromotive force between the water, on the one hand, and the glass of the tube—or, at any rate, an outer skin of water *affected by* the glass of the tube—on the other: the water becoming, say positive, and the glass negative—like most other things when put into contact. If now the two ends of the tube be kept at different potentials, it is very natural that the water (being already slightly electrified by contact) should be driven along the tube, being propelled, in fact, by its own skin.

1. From the *Electrical Review* (London).

1. There is just one point on which the views of the author are not clear to the present writer, viz., where Dr. Schuster considers the fact that he can drive a current through air by means of an E. M. F. of one-fourth or one-tenth of a volt as being itself a proof that there is no important difference of potential between the metal of his electrodes and the air. Seeing that any step of potential up from metal to air at one electrode must be precisely counterbalanced by an equal step down at the other electrode, I do not see how the fact that you can easily drive a current from one to the other proves anything.

If the two electrodes were of different metals, say one zinc and the other platinum, and if it were found equally easy to propel a current either way between these, then something extraordinary could be deduced; but no doubt such an arrangement would act as a simple battery. So long as the two electrodes are identical, even though they be both zinc, I fail to see how their behavior can prove anything about difference of potential between metal and air; though at the same time, so long as platinum or oxidized aluminum is used, I am very willing to admit that the actual difference of potential is most likely minute.

Digitized by Google

The effect, however, is excessively small and can hardly be observed in a wide tube. A capillary tube, or better still, the interstices of a porous partition are the best for showing it and making it conspicuous.

The converse effect is likewise easily explicable, for when water is driven along a tube the finite slip occurring at the boundary acts like any other frictional machine and produces ordinary electrification. The only reason why the observable effects are so small is because water is a conductor, and the electricity leaks back along it almost as fast as it is produced. Fine tubes, therefore, do better than coarse, and alcohol or other bad conducting liquid would do better than water.

But Helmholtz, instead of thus simply and naturally assuming a considerable finite slip between water and glass, apparently felt impelled to try whether the effect could not be produced without such an hypothesis, to which many facts seemed contrary. He, therefore, assumes that the outer layer of water divides itself into two—an "electrical double layer" as he calls it—between the components of which a contact difference of potential exists; and he then supposes that the outermost skin of this double layer clings fixedly to the glass of the tube, by the contact of which its properties are modified, and that the inner skin slides over it. He thus calculates out the experimental laws of the phenomena, and finds numbers agreeing with observation. Probably he was driven to this seemingly forced hypothesis, of the modified and unmodified water layer, and the sliding of one over the other, by finding the amount of slip necessary to explain the effects greater than could reasonably be assumed between water and glass.

Now comes in Prof. Lamb's modification. He has gone over Helmholtz's work point by point, and sees reason for differing from him with regard to some of the molecular magnitudes involved. He introduces into the formula a new factor having 10^{-8} in its denominator. The result is, that although he also requires a finite slip to explain electric endosmose and its converse phenomenon, yet he makes a very much less slip sufficient; so that he is able to return to the simple and natural view that the outer layer of water actually slides on the glass, but that an almost infinitesimal slide is all that is wanted to explain electric endosmose. He thus to all intents and purposes confirms the old view of the scientific hydraulic engineer, that the outermost layer or skin of water is practically stationary. Prof. Lamb's paper is ordered to be printed *in extenso* among the reports, and it will be then easier to appreciate the exact modification introduced by his theory, which at present is, of course, *sub judice*.

Immediately after this paper occurred the event of the meeting, the thing for which in all future times the visit of the association to Manchester will probaby be famous. Not that it made any sensation at the time; it scarcely took up 10 minutes of the time of the section; the president made no remark upon it, and only by two or three individuals who happened to have been thinking in the same direction was its real significance understood. It was a short paper by Sir William Thomson, entitled, "On the Vortex-Theory of the Luminiferous Ether." To understand the meaning of it one must go back a little.

It is well-known that several years ago Sir William Thomson suggested a vortex theory of matter, based on the observed behavior of a vortex ring and on the properties of vortices in general, as investigated mathematically by Helmholtz. The "vortex-atom," as it is called, is a favorite subject of speculation, and Prof. J. J. Thomson is attacking the problems of chemical combination by its means. But although this remarkable theory of the nature of matter was before the world, and its consequences being traced, yet of the nature of the ether we had no such theory. It was perceived that many of the properties of the ether must be those of a perfect fluid, else how could planetary bodies move unresistedly through it? But, on the other hand, some of its properties must be those of a solid, else were it incapable of transmitting waves of light. It was likened, therefore, to a jelly, and to pitch, which in some respects are semi-fluid, in others semi-solid; it was pointed out that bullets could sink through apparently solid pitch if time enough were given them; and the difference between this slow creep and the rush of a planet was asserted to be only one of degree. Yet this was felt to be not quite satisfactory, and the contradictory properties possessed by the ether remained paradoxical.

Then Prof. FitzGerald, of Dublin, made a brilliant guess: the properties of the ether could only be explained, he conjectured, by an assemblage of minute vortices in a perfect fluid—a "vortex sponge," as Sir William Thomson had previously called such a structure. If the ether consisted of a perfect fluid, everywhere completely enwrapped in utterly minute vortices, much more minute than the comparatively gross vortex rings constituting the atoms of matter, then it would permit the passage of bodies through it with perfect ease. It would also act as an electric and magnetic medium in the way needed by the Faraday-Maxwell theory; and in all probability, so he surmised, it would be found capable of transmitting the transverse waves of light. But to prove this last property deductively from the theory of vortices seemed a task of supreme difficulty, from which he shrank.

Actuated possibly by this suggestion, perhaps quite independently of it, it must have occurred to Sir William Thomson to consider this problem as a mathematical exercitation during some hours of leisure. However it happened, he did consider it, and did solve it; apparently too, without very much difficulty, or much consciousness of the feat he had achieved. At Manchester he scribbled the proof in a few lines on the black-board; and it was thenceforth known that a vortex sponge of perfect fluid could do everything that the luminiferous ether was known to do. Among the audience was Prof. W. M. Hicks, who probably knows as much of vortex mathematics as any man living, and he expressed himself afterwards as fully satisfied with the proof, and conscious of the greatness of the discovery.

Prof. FitzGerald, in proposing afterwards at the committee meeting that the paper be printed *in extenso* among the reports, characterized it as the greatest step towards the comprehension of the intrinsic structure of the universe which had been made since the time of Newton; the only possible exception occurring to him being the vortex theory of matter itself.

It is, perhaps, rash to wax enthusiastic over the greatness of an infant at the moment of birth: a man must commonly live, and must die, before his right magnitude becomes really known; nevertheless, when a discovery has been watched and hoped for, it is surely not only natural but seemly to herald its advent in not too dull and prosaic a manner.

It is not to be supposed that the discovery is complete and finished; a great deal more remains to be done to get it into shape and work it out, but a splendid start has been given.

Thus much for the results of Thursday. Passing on now to the next day, we come first to the new electric measuring instruments of Sir William Thomson.

The idea of these is to do away with all alterable opposition forces, such as permanent magnets and torsion or other springs afford, and to balance the attracting power of a current by the dependable force of gravity itself. The attraction between two pairs of coils is in fact weighed, and hence all possibility of variation in the constant of the instrument is avoided. If once correct, it remains correct until it becomes damaged or broken. It is set right first by a voltametric silver determination, and ever afterwards it serves as a standard of current, and, with certain reservations, of E. M. F. also. A beautiful series of instruments for different purposes was shown; whether they are not

Digitized by Google

too delicate for workshop use remained doubtful; but as they are certain to be speedily depicted and described in every electro-technical journal,[1] it is needless to dwell on them further.

There is one point of special practical interest in their construction, viz., the means adopted for conveying a powerful current to the balance arm without friction or much rigidity. This is effected by means of a pair of thin flat bands or combs composed of a multitude of very thin copper wires suspending the balance arm.

Mr. Glazebrook's optical report, and other optical papers, followed, but though optics is at the present day becoming but a branch of electricity, yet this view of it is hardly yet fashionable, nor are electricians generally so interested in the nature of light as doubtless by next century they will become.

Towards the end of the sitting Prof. Ewing described his recent remarkable researches in magnetism.

It is perhaps known that the Ampere-Weber-Maxwell theory of magnetism requires that for some very high magnetizing forces the magnetization produced shall cease to increase and begin to diminish; in other words, that the susceptibility of a substance to magnetism shall decrease and even become negative for sufficiently high magnetizing force. Thus, then, iron, if enormously over-magnetized, might actually become diamagnetic like bismuth.

To verify this prediction, the writer of this article has himself made some attempts, and is able to show a body which is paramagnetic in a weak field and diamagnetic in a strong one; but then such a body is not simple, pure, and homogenous, it is purposely built up of a magnetic and a diamagnetic substance. Or even when not purposely built up, who is to say that some trace of impurity is not at the bottom of the phenomenon?

Prof. Ewing has proceeded in a different way. He has pushed the magnetism of iron far bevond hitherto recorded limits, and believes that he finds indications that the decrease of susceptibility has begun. Whether this be so or not, there is no doubt of the tremendous magnetic inductions he has obtained. On the same scale as that on which the earth's horizontal intensity is .18 units, Prof. Rowland, of Baltimore, had obtained a field in iron as high as 25,000 units; and had given reasons for believing that this was about the maximum possible. Afterwards, Prof. Ewing managed to get it up to 32,000; and now, with the great magnet of Edinburgh University excited by a storage battery, putting a sharply sloped double-coned piece of Lowmoor iron with very narrow neck between its large poles, he has succeeded in beating his own record and forcing the magnetic induction in iron up to 45,350. Cast-iron has gone up to 31,270; and even in air he has measured a field of 25,620 units.

Prof. Ewing and Mr. Low, and, on another day, Prof. Barrett also, described further experiments on the peculiar 12 per cent. manganese steel, which is scarcely more susceptible to magnetism than is zinc. They find indeed that its magnetic permeability is only half as great again as air, and that accordingly it may become very useful for ship's plates and for the bed-plates of dynamos.

On Saturday sections A and B sat together for the consideration of electrolytic and electro-chemical subjects. The papers read will most of them shortly appear in these pages, and a brief general review is all that seems necessary.

After a report had been read, Prof. FitzGerald and Mr. Trouton gave a further statement of their experiments as to the exactness with which electrolytic conduction obeys Ohm's law.

They have been greatly troubled by temperature difficulties, which in liquids are far more accentuated than in metals, for reasons which Prof. FitzGerald clearly explained.

They succeeded, however, in proving that if there were any deviation from Ohm's law in copper sulphate solution it must be less than 1 part in a hundred thousand; a very satisfactory and valuable result. But whether this statement will apply equally well to very pure water or other bad conductor is still, strictly speaking, an open question.

Dr. S. P. Thompson communicated a paper by Prof. von Helmholtz on the effect of pressure on the electrolysis of water. Helmholtz gives a formula whereby the change of E. M. F. needed to decompose water under any pressure, produced by any gas or mixture of gases, could be calculated, so long as those gases reasonably obeyed Boyle's law. By experiment this formula was verified for very low pressures, with at any rate fair accuracy; and the result was that whereas 1.7 volts were necessary to the decomposition of water with platinum electrodes at atmospheric pressure .17 volt more would be required at 1,000 atmospheres, and .17 volt less would be sufficient at the one thousandth of an atmosphere. Pressure of the liquid's own vapor need not be reckoned. Whether the solubility of gases was taken into account or not I am not sure; I incline to think not; and if so the calculated results for high pressures are less likely to be accurate than those for low. Moreover, at very high pressures the mixed gases are apt to explode spontaneously.

Prof. Roberts-Austen then described his experiments on the passage of a current of several hundred amperes through a fused alloy of gold and lead, and of silver and lead, to see if any decomposition whatever could be detected. Assaying to within one part in 10,000 he could detect no difference; thus proving that, for these alloys at least, the conduction is wholly and simply metallic.

Prof. Lodge made an interim report on the experiments which he and Mr. E. E. Robinson are carrying on with regard to the rate at which the ions travel in electrolysis. He experimentally proves that in such a solution as salt and water containing one-tenth of a gramme equivalent, or 5.8 grammes of common salt per litre, the hydrogen atoms move at the rate of .0029 centimeters a second; that is 10½ centimeters, or about 4 inches an hour; when urged by a slope of potential of 1 volt per centimeter, that is 30 volts applied to the ends of a tube 1 foot long.

Prof. Rowland then described some remarkable experiments made partly by himself partly by others, on chemical action in a magnetic field. It is found that if a piece of intensely magnetized iron is being dissolved, say in nitric acid, the parts most strongly magnetized are half protected and are consumed less rapidly than other portions. Points and edges, for instance, are in this protected condition; hollows and flat places go first. It may be expected, therefore, that highly magnetized iron shall be somewhat electro-negative to ordinary iron, so that if the two be immersed in any corrosive fluid and joined to a galvanometer they shall act as a feeble battery and give a current. This also is found true.

It is plain that in dissolving and removing iron from a highly magnetized pole a little more work has to be done than if it were not magnetized; and, therefore, the protective tendency of magnetization is to be expected. The only question was whether iron *in solution* would be sufficently attracted to cause a perceptible effect. Some time back the writer of this article made somewhat similar experiments on magnetized and unmagnetized iron immersed in ferrous sulphate, using an arrangement very like that described by Prof. Rowland, though without so clearly perceiving the efficacy of points; the idea was to get a current by pulling iron out of solution with a magnetic pole. But oxidation of the ferrous sulphate by air caused a lot of trouble from spurious currents, and with insufficient perseverance the attempt was abandoned. It does not follow that it would have been successful, because this idea of the protection of iron from corrosion, though based on the same principle, is different in detail.

1. Sir William Thomson's instruments were fully described and illustrated in the *Review* for May 27th and June 10th, 1887.

Digitized by Google

Dr. Gladstone gave an account of some experiments on the effect of passing an electric current through solutions in which a chemical precipitate is slowly forming. It is well known that the formation of a lagging precipitate can be hastened either by heat or by shaking. Dr. Gladstone now finds that the passage of an electric current has a similar and marked effect. This also is an interesting result; showing that electrolytic conduction assists the interchanges or double decompositions occurring between mixed compounds.

Messrs. Gee, Holden, and Lees, brought forward some laborious experiments on the effect of pressure on the electrolysis of water and on the electromotive force of polarization. They worked at very high pressures, and were met with the difficulty of spontaneous combustion of the mixed gases. It must be remembered that this recombination need not necessarily occur in free space. It is known to occur easily in the presence of platinum, and there is no reason to suppose other solids incapable of bringing it about in the films condensed on their surfaces, especially at pressures of 300 atmospheres or so.

Prof. Silvanus Thompson explained the conditions under which *brass* can be electro-deposited, and showed how any desired proportion of copper and zinc can be obtained. The important points to keep sight of, in understanding how an electro-positive metal like zinc comes to be deposited at all in presence of copper, are the enfeeblement of the solution near the cathode plate, and the effect of this on the E. M. F. necessary for deposition of any particular metal. He also exhibited results of the commercial electro-deposition of good metallic *platinum*, which if non-porous is likely to be extremely useful.

Mr. W. N. Shaw gave the gist of a long and elaborate paper by Mr. FitzPatrick on the effect of the solvent in electrolytic conduction. It appears that whereas methyl alcohol by itself conducts better than does pure water, yet a solution of salt in methyl alcohol conducts distinctly worse than the corresponding aqueous solution—a singular and interesting result.

Monday was divided between meteorology and pure mathematics, but on Tuesday some more electrical papers were taken up.

Prof. Quincke described his observations on the behavior of gases immersed in a strong magnetic field. He takes a glass tube, closed by a sensitive pressure gauge, and fills it with the gas to be examined, sometimes at high pressure. He then immerses it in a very powerful magnetic field, and reads the gauge with a microscope. He thus finds that the magnetic stress in the gas is accompanied by a slight increase of pressure, amounting in some cases to as much as five millimeters of water. He gives, as the formula for the increase of pressure,

$$p' - p = \frac{\mu H^2}{8\pi};$$

where H is the strength of the field, and μ the magnetic permeability of the gas; and so makes it analagous to the effect caused by an electrostatic stress. The measurements of μ thus obtained by Quincke agree very fairly with those of Faraday—"Exp. Res.," iii., p. 502.

Mr. Glazebrook reported on the construction of standards of electrical units, and stated that the B. A. unit coils had not varied perceptibly among themselves since Mr. Hockin examined them 15 years ago; and since they are made of several different materials, the probability is very great that they have not varied at all.

Prof. Rowland gave the final result of the elaborate series of determinations of the value of the ohm standards which he has been carrying out for the past few years under the auspices of the American government. His value in ohms of the old B. A. unit agrees almost precisely with that found by Lord Rayleigh; but his determination of the column of mercury representing one ohm shows a discrepancy which, though small, is nevertheless large considering the care taken and the comparative simplicity of the operation.

Mr. Glazebrook adduced evidence showing that M. Mascart's mercury standards had varied from the time they were made to the time they were tested at Cambridge and retested again in France; and the feeling of the meeting plainly was that some explanation of the outstanding discrepancy between Prof. Rowland's and Lord Rayleigh's mercury determinations would probably be forthcoming after Prof. Rowland had returned to America and overhauled his tubes.

The correspondence between the ohm determinations at Cambridge and at Baltimore was so close as to be matter for congratulation, considering the extreme difficulty of the measurements and the difference of methods employed.

Prof. Ewing and Mr. Low described some interesting observations on the effect of a cut across a bar of iron on the magnetism developed in it by a given magnetizing force. The bar was made part of a complete magnetic circuit and wrapped with a certain number of ampere-turns; and then measurements were taken of the number of lines of force passing through it, first when entire, next when cut once through, then with two, three, and ultimately seven cuts, so that the bar became a column of eight pieces piled on one another. Not only was the bar tried thus but pressure was brought to bear upon it so as to cause better contact over the cut faces, and to show the effect of this. The cuts were first made carefully in the lathe: later they were also highly polished and made true Whitworth planes. Briefly it may be said that whereas each cut very distinctly weakens the magnetic induction, diminishing the permeability of the bar, pressure assists to restore some of it again; although it acts in a double fashion: squeezed *iron* being less permeable, while a squeezed *joint* is more permeable than an unsqueezed.

The Whitworth plane faces, however, enabled pressure to bring the bars so well into contact that they practically became whole again, and the cut had then no effect—at least so long as the pressure lasted.

On the whole, Prof. Ewing believed the effects of the cut to be completely accounted for by the presence of air films some thirtieth of a millimeter thick between the faces; nothing more occult being needed to explain the defect of permeability. But as Sir William Thomson urged, it would be well to repeat with a film of gold leaf before being absolutely sure of this result.

The remaining papers were not of high scientific importance, though doubtless of some general and technical interest. There was a curiously rudimentary, not to say trivial paper by Sir William Thomson on Poggendorff's method of measuring electromotive force, as given in any text-book, except that one of his current weighers is used instead of a tangent galvanometer. Mr. Preece related the continuation of his large scale experiments on induction between wires, which the resources at his command render possible. Prof. Forbes exhibited his ingenious smoke-jack coulombmeter, which acts both as a tell-tale of how much current is being used and as a record of how much has been used, whether said current be alternating or steady. Mr. Swinburne explained how he proposed to eliminate temperature errors from galvanometer and other such coils by winding them with two opposition coils of unequal strength and different temperature co-efficients, so proportional as to produce compensation, on the gridiron-pendulum principle; and Dr. Edward Hopkinson summarized in a complete and comprehensive form the general theory of dynamos, up to which he has been working for the past few years, both in conjunction with his brother and by his own practical experience. This paper is in type and does not lend itself to further abbreviation. Suffice it to say that it marks a distant stage of progress in the history of the science to be able to treat the phenomena of magneto-electric induction in this general and satisfactory manner.

Digitized by Google

LIGHTING TRAINS BY ELECTRICITY.

ON THE AUTOMATIC ELECTRICAL LIGHTING OF TRAINS.[1]

BY MR. THOMAS P. CARSWELL.

THERE are three methods of train lighting in use, namely, by oil, gas and electricity. As this paper is only intended to deal with the latter, the first two systems will be passed over. The amount of light from each is in favor of gas against oil, and of electricity against gas. Incandescent lamps only are used in train lighting by electricity, the arc light not being suitable. In using the incandescent lamps they are placed in each compartment, and generally take the place of the oil or roof lamp. There have been three practical applications of train lighting by electricity. In the first two the roof lamps are replaced by incandescent lamps, while in the third case they have not been interfered with. The first two methods are those which have been more or less used, while the third has just been tried.

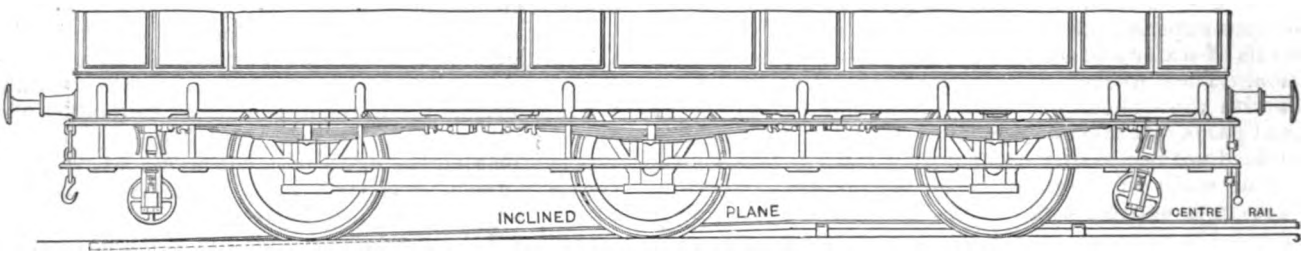

Fig. 1

What I propose to speak of as the third method (patented May 17, 1886) is that which is now being tried for the first time, I believe, on the Glasgow City and District Railway. On the City and District Railway the circumstances under which the light is required are entirely different from almost all others, as it is specially required during the day, and while the trains are in the tunnels only. These trains run in the open air the greater part of their journey, but have to pass through the tunnels from three to fifteen times daily; or in other words, they are on an average somewhat over an hour in darkness. The arrangement for lighting each train as it enters the tunnel is as follows:

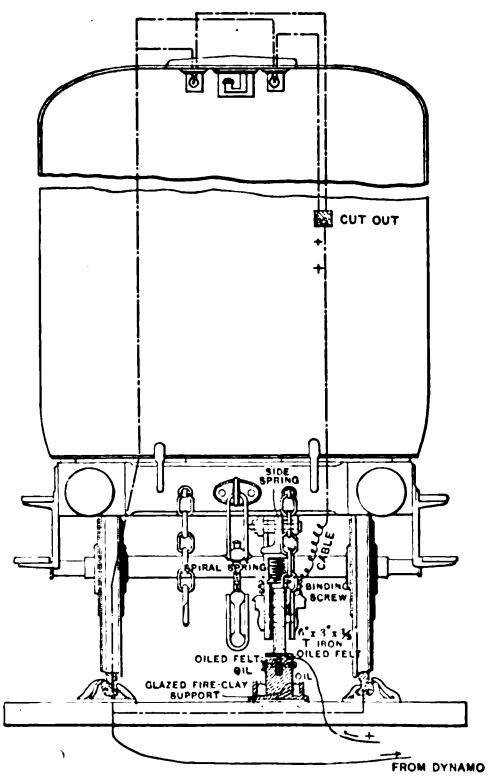

Fig. 2.

A centre or third rail has been laid down from one end of the tunnel to the other, but is omitted in the open air. This is shown in several of the accompanying illustrations. It is formed of ordinary T iron, and is inverted and laid on insulators or supports, so that it stands 4 in. or 5 in. higher than the ordinary rail, as shown in figures 2 and 6. It is jointed together by small angle irons with four bolts, there being a small strip of sheet copper between the two, so as to help the contact, figure 3. The holes in the rail are oval, to admit of expansion and contraction, and it is held in position by iron cotter pins, which pass through the sides of the jaws or supports. At each end of the tunnel, this centre rail or inverted T iron is bent down to the level of the ordinary rails so as to form an inclined plane (see figures 6 and 7).

The insulators or supports which are used are made of glazed fire-clay, and have the central part or stem isolated from the base. The stem has two slots in it, one to receive the T iron and the other for the cotter, or split pin to pass through. A small piece of roofing felt, soaked in oil, is laid in the slot on which the T iron rests. The lower part or base is made in the form of a trough, which is filled with oil to help the insulation, and is fastened to the sleepers by means of two coach screws.

By this method of fixing the centre rail, it is always kept at the same height above the ordinary rails, and if the latter are raised the former is raised also as it rises with the sleeper. These supports are fixed about 5 ft. apart, and as far as can be seen they stand very well.

Two contact makers or pulleys, figures 1, 2 and 4 are fixed to the framing of each carriage, at a height to correspond with that of the centre rail. Only one is actually required, but it is found that two give a steadier light, and where there are junctions to pass over, both are required to maintain the connection. These pulleys are made of crucible cast steel, and are 15 in. in diameter. They are hung on a centre so as to move in horizontal direction and have a spiral spring on the top of the axle-box, which allows it to rise vertically 3 in. or 4 in. Two side flat springs are fixed on the hanger or jaw in which the pulley works so as to keep it in a vertical position.

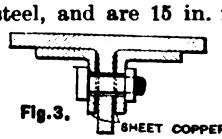

Fig. 3.

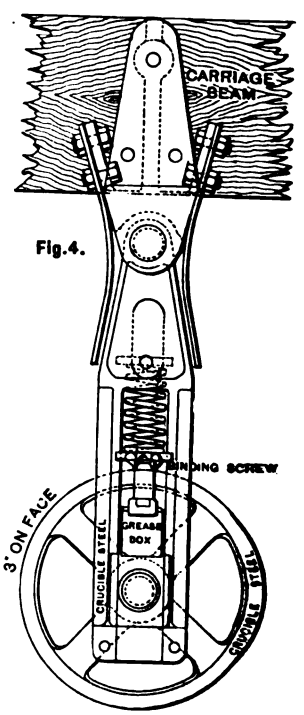

Fig. 4.

The current of electricity for lighting the lamps is derived from a large Crompton compound-wound self-regulating dynamo, having a potential at the terminals of 110 volts. This dynamo is always kept running, the positive lead being connected to the centre rail, and the negative lead to the ordinary rails. It is driven by the same engine as is used for lighting Queen street high level station. The leads are not connected directly with the center rail, but to three Hedges' safety fuses in the engine room, designed to give way in case of a short circuit (see figure 7).

The tunnel is divided into three circuits, namely, College to Queen street station (low level), and Queen street to Charing Cross and to Finnieston, as shown in the last-mentioned figure. By this means, in the event of there being a breakdown in either tunnel it can be switched off so as not to interfere with the other two. The lengths of the circuitare 748, 484 and 2196 linear yards respectively. The area of the central rail increases as it leaves the dynamo, while the resistance of each circuit is the same. The estimated loss or fall in potential at the end of each circuit, with a train in it, was 10 volts, and it is found that at Finnieston station, which is 2196 yards away, such is the case. It is possible to have two trains in two of the circuits, and four in the other, or eight in all; and the cables leading to each have been arranged accordingly. Insulated cables laid in creosoted troughing and filled with pitch have been laid from the dynamo to the center and ordinary rails.

1. Abstract of paper read before the Philosophical Society of Glasgow.

Digitized by Google

The wires from the contact pulley are connected to two 16 candle power lamps, which have been placed in each compartment, fixed on either side of the ordinary roof lamp, so as not to interfere with it and in order that the latter can be used when required (see figure 2). These lamps, which are of the Swan type, are 25, 50 and 100 volt lamps, but only one is lit at a time, the second being a reserve which automatically lights itself in the event of the first one failing.

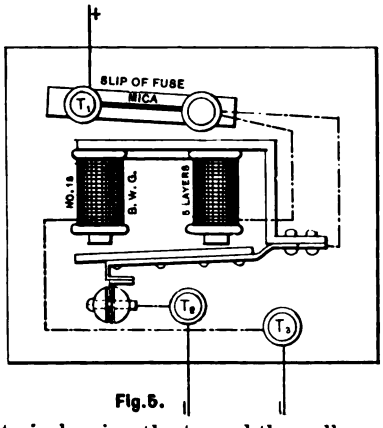

Fig.5.

Each circuit is formed in the following way: The positive lead to the lamps is connected to the two contact pulleys, while the negative is connected to the spring of the carriage. It will thus be seen that as soon as the train enters the tunnel the pulleys make contact with the center rail, the current flowing from the dynamo through the center rail and pulleys to the lamps, and returning through the springs and wheels of the carriage to the ordinary rail, and through it back to the dynamo again. On the train leaving the tunnel the pulleys run down the inclined plane of the center rail, breaking the connection and so putting the lamps out.

between the carriages, so that the train can be broken up or shunted as usual, while the light is maintained whether the train is in motion or at a stand.

During the new year holidays some of the trains were running with only one carriage fitted, while others had six or eight fitted and the remainder not.

During the passage of these trains through the tunnel the speed of the dynamo was nearly constant, and their presence in the circuit could only be detected by a slight hissing noise at the commutator brushes, and faint sparking, if any. This system has now been in use four months, and two trains have been running all this time, only being off one day weekly to be cleaned. The number of lamps in the two trains was on an average 60; and, in the four months' lighting, three of them have had to be renewed. Two of the three were broken maliciously, the outside globes having been broken also, while in the other the carbon filament gave way, having burned 100 hours.

Since this paper was read, eight trains—or, in all, 74 carriages—have been fitted and are running daily. Taking the running of these trains for six months, the total number of lamp hours is 39,642. During this time it has been necessary to replace 44 lamps, so that the average life of the lamps has been 900 hours each; but as eleven of these lamps were broken maliciously by passengers in the trains, their actual life is 1210 hours.

In this system the electric light is not used at night, the gas or oil lamps being still made use of, which are there to fall back on should a breakdown take place. In the other systems the electric light was used alone, and could be made use of any time, whereas in this it can only be had in the tunnels. Of course, it has the advantage of allowing the trains to be broken up (which is done sometimes twice a day), without having any extra coupl-

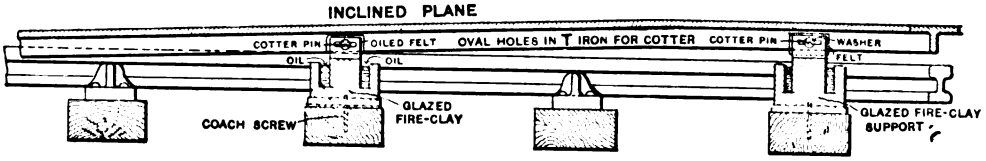

Fig.6.

As regards the power required for each train, it may be said to be about 2000 watts, or from two to three horse-power.

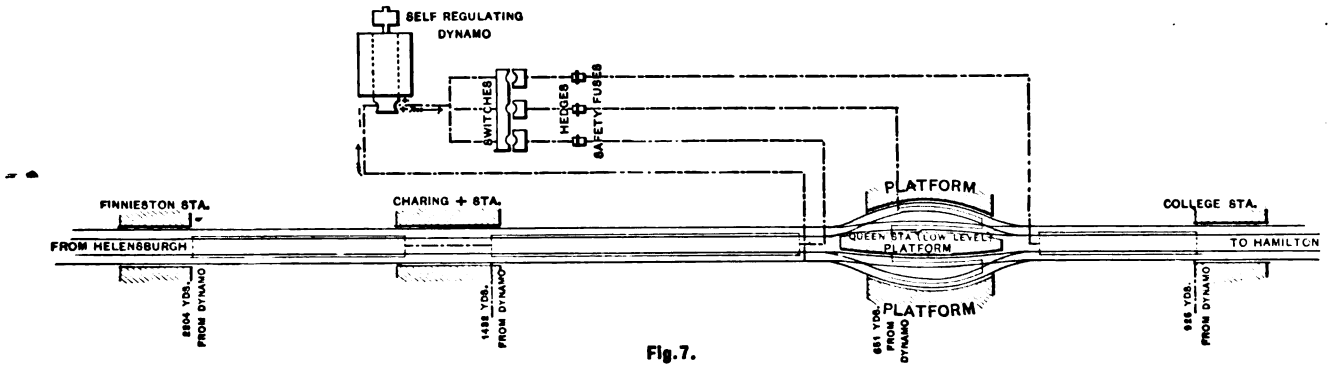

Fig.7.

In order to prevent the rusting of the centre rail, and to keep it clean so as to make good contact, a steel wire brush is fixed on one carriage in each train. It is found that the brush makes better contact and gives a steadier light than the pulley, but, owing to the friction, the tear and wear would be too great to adopt it entirely.

It is found that the "cut-outs" work best either with the 25 or 50 volt lamps, as they take more current, but even regulated and connected to a single 100 volt lamp they act well.

As already mentioned, the end of the center rail at Finnieston station, which is furthest away from the dynamo, is distant about 1¼ miles (2196 yards); and at this point, with one train in circuit or 36 lamps, the potential is 100 volts, or that required to light the lamps.

The insulation of the center rail is not quite perfect there being a slight leakage, but it cannot be traced to any particular part and it is practically inappreciable, being only about 3 amperes. This leakage may arise by the steam conveying the current to "earth," as on a dull day the center rail is quite wet; and in the distance from the dynamo to Finnieston the area exposed is no less than 840 square yards on one line alone, so that the leakage is not to be wondered at.

It will be seen that by this system the train, or rather each carriage, is lighted and extinguished on entering or leaving the tunnel—automatically, as it were. There are no connections

that of either of the other two, and fully a third less than that of gas, while the working expenses are much the same as the first two systems, but a third less than gas lighting.

ON INDUCTION BETWEEN WIRES AND WIRES.[1]

BY WILLIAM HENRY PREECE, F. R. S.

LAST year at Birmingham I pointed out that the electro-magnetic induction between wire and wire upon lines of telegraph extended to distances much greater than was anticipated, and that effects were observed even when the wires were separated by the breadth of England. I was not satisfied with the last experiments made in the north of England. I had reason to believe that they were vitiated by induction and conduction through the network of cross circuits and railway wires in that part of the country, so in October of last year I took the district between Gloucester and Bristol along the banks of the Severn, where it was possible to completely isolate two systems of wire separated by the river Severn for a length of 14 miles at an average distance apart of 4.5 miles, and where any disturbing cross-inductive or conduc-

1. Read before the British Association for the Advancement of Science (Section A.—Mathematical and Physical Science), Manchester, September 6th, 1887

Digitized by Google

tive connection was impossible. The circuits on each side of the river could be completed by the earth or by metallic returns passing far inland, in the one case through Monmouth, and in the other cases through Stroud. The experiments made were very numerous, but the results were almost negative. No measurable effect whatever could be detected when primary currents of .449 ampere strength were intermittently sent by a rapid vibrator or buzzer on each side, though it was just possible to distinguish faint Morse signals. It was quite clear from subsequent experiments that we were on the extreme verge of audibility, and had we been able at the time to increase the strength of our primary current we should have heard louder effects. In fact, I have taken this experiment as a measure of the limit of audibility—a conclusion fully confirmed by subsequent results. The experiments fully justified my conviction that those reported last year as occurring between Newcastle and Carlisle were wrong.

In all the following experiments the primary currents were always of rapid frequency, producing a buzzing sound, which could be easily read when audible, if sent in the Morse code, and received on a Bell telephone.

Two squares of 1,200 yards of gutta-percha covered copper wire, or 300 yards each side, and of a resistance of 15 ohms were placed 300 yards apart in the Porthcawl Sands in South Wales, and conversation by the Morse code was readily maintained with primary currents of .226 ampere. Conversation by telephone was impossible. Two other similar squares were subsequently (December) suspended on scaffold poles 15 feet above corresponding squares lying on the sands, which latter were covered with water when the tide was up.

No difference whatever could be detected in the strength of the signals received by induction, whether the space were air or water, or a combination of air and water. The Irish wires on the railway were 150 yards distant from the squares, and the usual disturbance was evident on all the squares, whether under water or not.

The principal object of this experiment was an endeavor to differentiate any electro-static from the electro-magnetic inductive effect, and the conclusion drawn was that the whole phenomenon was electro-magnetic, for no electro-static effect could be obtained. No doubt with parallel wires on a line of poles, where the distance between wire and wire is far less than that between wire and earth, electro-static induction comes into play, but its effect in the cases investigated was absolutely inappreciable.

This was confirmed by further experiments made with squares of 33 feet sides, fixed three feet apart.

Moreover, it tends to the conclusion that the magnetic field extends uninterruptedly through the earth as it does through the air, and that if the secondary circuit had been in a coal pit it would have been equally evident.

It also accounts for the peculiar disturbance observed in submarine cables when lying near each other as described in my previous paper. I hope to have the opportunity some day of testing the limit of audibility in water. Cables, as a rule, lie too far apart for the purpose. I have made several efforts to get results on our Irish cables; but they lie apart far beyond the limit. Mr. Ash, the superintendent of the Eastern Telegraph Co. at Porthcurnow, in Cornwall, joined a telephone to the ends of two cables, one terminating at Lisbon 820 miles away, the other terminating at Vigo, 620 miles away. Signals could be distinctly heard on the telephone from the Brest cable landing about half a mile away, and terminating at Penzance.

We happened during the autumn to be constructing a new trunk line carrying four copper wires from London to the coast of North Wales, and for many miles of its length in different places it ran parallel at various distances to the Great Western Railway. On November 11th, 1886, between Shrewsbury and Much Wenlock, a wire on the railway, 10¾ miles in length, was made the primary wire, along which a periodic current of .08 ampere was sent. Strong signals were received on the copper wires, although they were completely isolated from any possible interference. The frizzling sound due to the ordinary induction from the mixed signals used in ordinary working were also evident, but the separating distance for eight miles was only one quarter of a mile. Between Much Wenlock and Bewdley for a length of 12½ miles, where the separating distance averaged one mile 1,046 yards, the ordinary induction sounds entirely disappeared. On November 28th, 1886, similar experiments were repeated on a system of wires separated and isolated by the River Mersey for a distance of 11 miles. The primary circuit completed by the earth was on the Lancashire side. On the Cheshire side the secondary circuit was completed by a well-insulated metallic loop running inland, and measuring 38½ miles in length. Morse signals were distinctly received. The separating distance was 1¼ mile. In February, 1887, the section between Worcester and Bewdley was divided into lengths, as shown in the following sketch:—

A wire on the railway was made the primary, the periodic current being .12 ampere, but the results were *nil*.[1] In no case could induction be heard between any of the points A, B, C, or D or upon the whole length. Resort was again made to squares in a field near Cardiff, removed from all possible interference, and the standard of comparison made was the limit of audibility. This is not an absolute or a scientific standard to use, but it is practical. It depends on the variation of the human ear and the sensibility of the telephone receiver, but as the results recorded were always the conclusions of several persons, and the same telephone receiver was used in all cases, the normal ear may be assumed to have been used, and telephones do not differ much

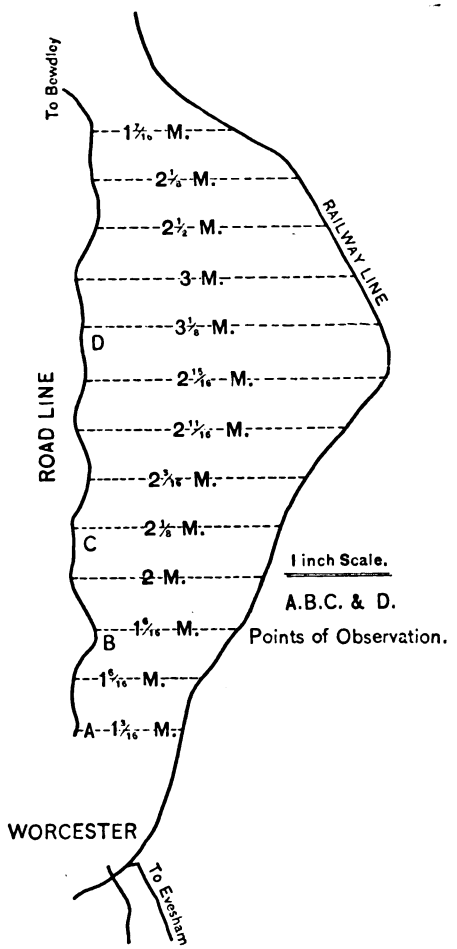

from each other when the same pattern is used. But they are much dependent on surrounding circumstances and extraneous sounds, on slight noises arising from the wind, from the rustling of the trees, from showers of rain, from passing persons or vehicles. The results of these experiments are given in the following table:—

TABLE A.

Experiments on Induction at Lisvane, February 2d, 3d, and 4th, 1887.

Experiment.	Current in primary. C_1.	Working face of primary.	Working face of secondary. (l)	Resistance of secondary. r_2.	Limit of audibility. x.	Calculated results.
	Amperes.	Feet.	Feet.	Ohms.	Feet.	Feet
1	.69	600	30	700	179	179
2	1.3	600	30	700	257	246
4	.69	600	60	700	585	
5	.69	600	30	700	182	
6	.69	600	30	200	641	641
7	.69	600	60	50	915	926
8	.69	600	90	75	1100	1134
9	.5	600	90	70	1373	1280

The extreme limit of audibility is derived from the Severn experiments, and is taken at 1.9016 miles which would be the case were we operating with one mile of line and one ampere. Other conditions remaining the same.

$$x = 1.9016 \sqrt{\frac{C_1 \, l}{r_2}}$$

from which the sixth column is calculated.

On April 10th, when the system along the banks of the Severn

1. The limit of audibility in this case was .66 mile.

Digitized by Google

was again resorted to, as a primary five wires running on the Midland Railway between Gloucester and Stonehouse were bunched at each extremity, and the secondary was one of the road wires which was parallel with the railway, and at an average distance of one mile, over a length of two miles. This secondary could be joined up at will into sections of one and two miles long, the observations being made in the middle. Under these circumstances the following observations were taken.

TABLE B.

Experiments on Induction, Gloucester and Berkeley, 10th April, 1887.

Experiment.	Current in primary.	Length of secondary.	Resistance of secondary including telephone.	Results.
	Ampere.	Miles.	Ohms.	
1	1	1	85	Good.
2	.73	1	85	Somewhat lower than in No. 1.
3	.53	1	85	Slightly lower, but above limit.
4	.33	1	85	Not much distinguishable from No. 3.
5	.22	1	85	Just audible. Taken as limit.
6	.11	1	85	Not a sound.
7	.11	2	112	Faintly heard, but below limit in experiment No. 5.
8	.148	2	112	Somewhat better than No. 7, but still low.
9	.22	2	170	In these experiments the two-mile length was made equal in resistance to twice the mile length, the audible sounds being under these circumstances alike in both wires.
10	.22	1	85	
11	1.0	1	425	Current in primary increased five times, and resistance in secondary in like proportion. Audible limit reached.
12	.44	1	165	Current in primary, and resistance in secondary doubled, and audible limit again reached.
13	.85	1	335	Current in primary, and resistance of secondary increased four times. Limit of audibility again reached.

Having thus obtained the conditions that determine the limit of distance across which induction is perceptible by the telephone, it became necessary to make some careful measurements so as to formulate the law that regulates the observed effects.

Let there be two wires placed parallel to each other for a length, l, and at a distance, d, then whenever the circuit is made in one wire a secondary current, C_2, due to electro-magnetic induction, and in the reverse direction will be produced in the other wire, and when the primary circuit is broken a current in the same direction will appear in the secondary. The relation between the primary C_1 and induced currents is given by the formula

$$C_2 = M\, C_1$$

M being a co-efficient of induction depending on—

1. The length, l.
2. The distance, d.
3. The resistance of the secondary circuit, r_2.
4. The rate at which the primary current rises or falls.
5. The condition that determines the rate at which the current rises or falls in the secondary circuit.

The following experiments were made to determine these different functions of M. The new general post office at St. Martin's-le-Grand is an oblong building, with four convenient corridors or galleries all round the building, along each of which perfectly insulated gutta-percha covered copper wires .050 inch in diameter were suspended along the wall. The wires were 20 feet apart, and each formed a complete metallic circuit, 250 yards in length, in which any apparatus could be inserted. The building itself is a huge magnetic field in a constant state of perturbation owing to the concentration there of a thousand circuits conveying messages. The consequence was that each experimental circuit was always in a state of disturbance, rendering accurate measurements during working hours impossible, and speech out of the question. Nevertheless, it was quite possible to differentiate the sound of the voice from the rest of the noises though 80 feet of space intervened. It being quite evident that no other instrument than the telephone could indicate these effects, and my object being to measure them in absolute measure two wires were suspended around one corridor at a uniform distance of six inches apart. After obtaining reading at this distance the space was increased to 12 inches, and, finally, reduced to a distance of one-fourth inch.

The primary current .21624 ampere was obtained from a Daniell battery, and was made uniform in strength in all cases. The secondary currents were read by the throws of a Thomson galvanometer. These deflections were reproduced and measured as is done in measuring condensers. The average results of many experiments come out as follows :—

Inches.	Observed.		Calculated.
.25	.004	amperes	.004
6.	.000007	"	.000007
12.	.000002	"	.0000018

It will be seen that the law follows the inverse square of the distance, and this is fully confirmed by previous and subsequent experiments. Moreover, it is easy to show that it must be so when we can neglect the influence of the earth. It is well known, and has been fully verified in all these experiments, that the strength of the secondary current will increase directly with the strength of the primary current, and directly as the length of wire under influence within the limits of these experiments. We can thus calculate a useful standard for use.

Two hundred and fifty yards of .21614 ampere, at 12 inches, induced a secondary current of .000002 ampere in a circuit of 13.27 ohms, or one mile of one ampere, at one mile distance, would induce a secondary current of .0000000000013, or 13×10^{-13} ampere ; and at 2 miles 3×10^{-13} ampere in wires such as were experimented with.

We can write the law thus—

$$C_2 = \frac{C_1\, l}{d^2 r_2} \times M.$$

I intend to repeat these experiments with care to obtain the value of the constant, M, in C. G. S. units.

The disturbances due to the mixed working currents on our telegraphs cannot be appreciable beyond 450 feet, but those employed in distributing electric light by means of secondary generators must extend to miles unless they are neutralized by the two conductors being fixed parallel and close to each other.

I have not yet been able to make any experiments to determine satisfactorily the influence of retardation and electro-magnetic inertia on this limiting distance.

I erected two wires of iron for a mile alongside the copper wires, but was not able to get any conclusive results. It is, however, quite certain that there is a difference in the effect when the wires are of iron or of copper, and that the distance across which induction is perceptible must reach a limit of length when the resistance and capacity reduce the rate at which the currents rise and fall, and the effects must begin to diminish. Hence the disturbing effects due to short lines are more pronounced than those due to long lines.

This limit of audibility enables us to calculate the current required by a Bell telephone, like that used in these experiments, to become just audible. It is roughly the sixth ten thousand-millionth of a milliampere, or in figures, .0000000000006 ampere, or 6×10^{-13} ampere.

Hence the air telegraphs used in America by Edison, Phelps, and others for communication with passing trains are readily comprehended, and the distances to which disturbances are propagated between telegraphic, electric lighting, tramway circuits easily calculated. The distance through which communication can be maintained between ship and ship, between lightship and shore, between islands and the mainland, between the defenders inside and those outside a beleaguered city, becomes simply a calculation. I have been assisted in carrying out these experiments by Mr. J. B. Chapman, of my own office ; by Mr. J. Gavey, of Cardiff, and Mr. J. R. Edwards, of Liverpool, both members of the Society of Telegraph Engineers, and the post office engineers in charge of the districts affected, all of them careful and reliable experimenters.

NEW ELECTRIC BALANCES.[1]

BY SIR WILLIAM THOMSON, F. R. S.

THE balances are founded on the mutual forces, discovered by Ampère, between the fixed and movable portions of an electric circuit. The mutually influencing portions are usually circular rings. Circular coils or rings are fixed with their planes horizontal to the ends of the beam of a balance and are each acted on by two horizontal fixed rings placed one above and the other below the movable ring. Six grades of instruments are made, named centi-ampere, deci-ampere, ampere, deca-ampere, hecto-ampere, and kilo-ampere balance. The range of each balance is about 25. Thus, the centi-ampere balance will measure currents of from 2 to 50 centi-amperes, while the kilo-ampere balance will measure currents of from 100 to 2,500 amperes. Since the indications of the instrument depend on the mutual forces between two parts of an electric circuit of permanent form and on their relative position, they are not subject to the changes with time

1. Read before the British Association for the Advancement of Science (Section A.—Mathematical and Physical Science), Manchester, September 2, 1887.

Digitized by Google

which are so troublesome in instruments the constants of which depend on the strength of permanent magnets.

The most important novelty in these balances is the connection between the movable and the fixed part of the circuit. The beam of the balance is suspended by two flat ligaments made up of fine copper wires placed side by side. These ligaments serve instead of knife edges for the balance, and at the same time allow the current to pass into and out from the movable coils. The number of wires in each ligament varies from 20 in the centi-ampere to 900 in the kilo-ampere balance. The diameter of the wire is about $\frac{1}{10}$th of a millimeter, and each centimeter breadth of the ligament contains about 100 wires.

The electric forces produced by the current are balanced by means of weights which can be moved along a graduated scale by means of a self relieving pendant. Two scales are provided, one a scale of equal divisions, the other a scale the numbers on which are double the square roots of the numbers on the scale of equal divisions. The square root scale allows the current to be read off directly to a sufficient degree of accuracy for most purposes. When high accuracy is required the fine scale of equal divisions may be used and the exact value of the current obtained from a table of doubled square roots supplied with the instrument.

An engine room voltmeter on a similar plan was described. It consists of a coil fixed to the end of a balance arm, suspended in the manner above described, and acted on by one fixed coil placed below it. The distance of the two coils apart is indicated on a vertical scale by means of a magnifying lever and serves to indicate the difference of potential between the leads to which the instrument is connected. The coils of the instrument are of copper wire, and an external platinoid resistance of considerably greater amount is joined in circuit with it. The electrical forces are balanced by means of a weight placed in a trough fixed to the front of the movable coil, and weights suited to the temperatures 15°, 20°, 25°, 30°, C., as indicated by a thermometer with its bulb in the centre of the coil are provided.

Two other instruments were described, namely, a marine voltmeter suitable for measuring the potential of an electric light circuit on board ship at sea, and a magneto-static current meter suitable for a lamp counter.

In the marine voltmeter an oblate spheroid of soft iron is suspended in the centre of, and with its equatorial plane inclined at about 40° to, the axis of a coil of fine copper wire by means of a stretched platinoid wire. When a current is passed through the coil the oblate of soft iron tends to set its equatorial plane parallel to the axis of the coil and this tendency is resisted by the rigidity of the suspension wire.

The lamp counter is a tangent galvanometer with special provision for preventing damage to its silk fibre suspension, and for allowing the constant to be readily varied by the user to suit the lamps in his circuit.

ON THE APPLICATION OF THE CENTI-AMPERE OR THE DECI-AMPERE BALANCE FOR THE MEASUREMENT OF THE E. M. F. OF A SINGLE CELL.[1]

BY SIR WILLIAM THOMSON, F. R. S.

FOR the purpose of measuring the E. M. F. of a single cell the centi-ampere or the deci-ampere balance is put in circuit with a

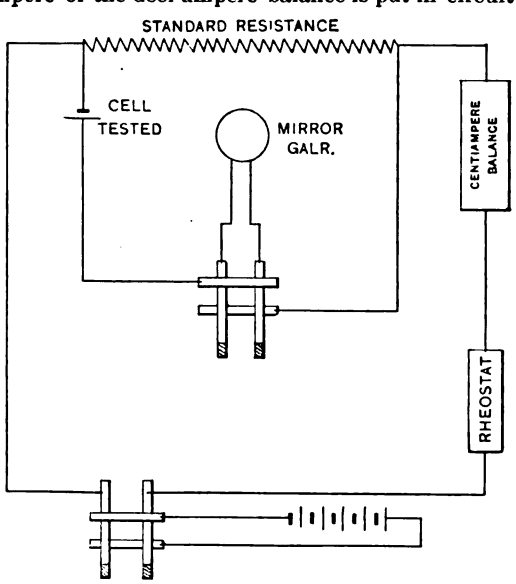

battery of a sufficient number of cells, a rheostat, and a standard resistance in the manner shown in the diagram. The current measured by the balance is then varied by means of the rheostat until the difference of potential between the ends of the standard resistance is exactly equal to the potential of the cell. This equality is tested by placing the cell in series with a mirror galvanometer or a quadrant electrometer in a derived circuit, the ends of which are connected with the ends of the standard resistance, and observing whether any deflection is obtained by closing this circuit. Suppose, for example, the standard resistance to be 10 ohms, and the current as indicated by the balance 0.108 amperes, when no deflection is obtained on the mirror galvanometer by closing its circuit, the potential of the cell is $10 \times .108$ or 1.08 volts. Proper precautions must, of course, be taken to eliminate thermo-electric or other disturbances in the circuit.

The quadrant electrometer may be used with advantage in the derived circuit, when it is important that no current should flow through the cell; but the mirror galvanometer has the advantage of much greater sensibility.

1. Read before the British Association for the Advancement of Science (Section A.—Mathematical and Physical Science), Manchester, September 6, 1887.

UNDERGROUND AND AERIAL CABLES.[1]

BY B. E. SUNNY.

A MILE of Patterson cables has been put down in West Madison street in Chicago, made up of one 150 wire cable and cables of from 25 to 125 conductors, containing in all about 200 miles of wire. Number 18 American gauge was used, and the insulation and capacity tests are very satisfactory.

These cables were put down to abandon a pole line of 90 wires built about six years ago. Nothwithstanding the fact that the wires on the route were badly decayed and contained many defective connections, and that the cables were of the best manufacture, the wires on the pole route talked about 25 per cent. better than those in the cables.

The cross-talk is only noticeable at times, and is not heavy. These cables are laid in a box of creosoted wood and covered with one-quarter inched tarred sheet iron. The box is just big enough to take the cable and no filling of any kind is used. A gang of twenty men put this cable down at a rate of 500 feet per day, finishing up everything excepting the permanent restoration of the pavement. Eleven hundred feet of conduit has been built to carry the cables from the present central office to the new building. The construction includes the use of wrought-iron pipe two and one-half inches inside diameter, free from burs and presenting a smooth surface to the cables. The pipes, sixteen of them in all, are spread apart and the interstices filled with concrete. We are putting No. 18 gauge 200 conductor cables into the pipes, and find that they work smoothly, and that a gang of six men can put in four pieces of cable 400 feet each per day. The underground cables put down two years ago are giving satisfaction. Recent tests on some of them show an insulation ranging from five to fifteen megohms. One cable put down by the Standard company two years ago indicated a very low insulation on the regular test. We opened the street in two or three places and finally located the fault in a splice. No abrasion of the lead pipe could be noticed nor was there any superficial evidences of a fault. A piece including the splice was cut out and another piece of cable put in. The piece cut out was laid on a board, and shortly it was noticed that water was coming out of the splice through a blow hole the size of a pin in the solder. There was perhaps half a pint of water in the sleeve. It took two years for the fault to develop. In another instance a Standard cable was cut into by plumbers some time last November. In June the insulation was found to be low, and when the fault was located it was discovered that the water had gone into the core through a bad cut in the lead and had worked back forty feet, requiring new cable to that extent. We have several cables chiefly aerial, that are defective and are being looked up. It requires the constant attention of a galvanometer corps to keep them in good shape. By means of semi-annual tests defects have been discovered and removed before they had time to affect the service. The trouble from low insulation at the terminals is being overcome by filling the terminals with paraffine wax or some other insulator, and keeping the terminals well protected from moisture. The trouble outside of the terminals on air cables is made up of cuts in the lead by hooks cutting through, bullet holes, and careless workmen.

The following tests recently made may be of interest: Two wires were selected which ran together through nine cables of seven different styles, a distance of 4.4 miles. The cables are Patterson aerial and underground and Standard aerial and underground, and contain from 50 to 150 wires, each ranging from eighteen to twenty-six gauge. The resistance measures 444 ohms. The first test was made on a day of alternate sunshine and rain, when everything was damp. There was absolutely no cross-talk from one wire to the other, and conversation could be carried on freely and without any more effort than on an air line. The introduction of an annunciator drop into the circuit made no dif-

1. Read before the National Telephone Exchange Association, Pittsburgh, September 27, 1887.

Digitized by Google

ference. A test for insulation showed 400,000 ohms for the distance and a static capacity of 1.4 microfarads. A week later the same wires were used in the same manner with less satisfactory results. The weather was dry and warm. It was found that counting on one could be distinctly followed on the other, and vice versa.

The cross-talk from the other wires was very noticeable, but not of sufficient volume to disturb the user. Conversation at a distance of eight inches from a fairly adjusted transmitter was indistinct and muffled. With the lips close to the transmitter, and by speaking in the usual tone of voice, the results were fairly satisfactory. This was particularly true when an air line of one and one-half miles was added. The measurements made after the test showed the insulation to be 4 megohms for the distance against .4 of a megohm on the previous test, and 1.15 microfarad capacity against 1.4. By opening one of the wires at both ends, so that all connection with the earth was removed, conversation could be freely carried on between three parties who were looped in. The first one was 5,000 feet from the open end of the cable, and the other 12,000 feet. The only difference noted by the intermediate parties in the working of the wires with the ends open was that the cross-talk was much heavier than with the grounds on. The second test indicates conclusively that we have used up all our margin, and that a slight addition to the length of the cables will make the connection of no commercial value. In fact, in ordinary dry, clear weather, conversation is only carried on by frequent repetitions and considerable discomfort. The nine cables included in this test are all in good condition, and with the exception of a few pieces of air cable, are new. On the above circuit there are sixteen terminals in use, but in all cases, except in exchange offices, the cable wires of one cable were connected with those of another at the terminals with kerite or okonite wire, so that the insulation was good at these points. The experience of four years has proven the fallacy of the practice of requiring the manufacturers to furnish a cable showing an insulation of from 300 to 800 megohms per mile. While this insulation can be secured immediately upon the completion of a cable, it is utterly impossible to maintain it. Nor is it desirable to maintain it, for the reason that cross-talk is greater on a cable with a "fancy" insulation than in one of a megohm. Subscribers always complain of cross-talk when their wires are put into a new cable, but after a few months we hear no more about it. This is not so much because they have become accustomed to the cross-talk as it is that with the lowering of the insulation the cross-talk is decreased. A better specification would be one megohm per mile and not more than five, and a guarantee from the manufacturer that this insulation will hold up for ten years. Such an insulation exceeds anything that we are able to get on air lines. In a recent test nine wires showed each an insulation of 5.3 megohms. Rain began to fall, and in ten minutes the insulation had fallen off to 3.2, and no doubt went lower. This illustrates the extreme sensitiveness of a high insulation to moisture, and indicates clearly that where there is a large number of cables in use the conditions are constantly varying, and nothing like uniformity in the working of the wires can be expected or secured.

ELECTRICITY AS A MOTIVE POWER.[1]

BY WILLIAM WHARTON, JR.

SINCE the last annual meeting of this association the subject of using electricity as a substitute for horse-power on street railways has received much attention, and great advances have been made in the practical application of it to that purpose, so that it may now be stated broadly there is no longer any doubt or uncertainty that electricity can be successfully and economically employed in a great many places, if not most places, as a substitute for animal power. Quite a number of electric railways are in operation in the United States running satisfactorily under all the requirements of public service, so that there is much greater familiarity with and a more general knowledge of electricity among railroad men and the public than ever before. There is so much confidence in the practicability of electrical propulsion of cars being well established, that the subject is no longer treated with doubt or disdain; on the contrary great interest and respectful attention are at once manifested whenever the subject is brought up. Although some parties, interested perhaps in pushing forward their own special inventions, may claim too much, the actual facts as presented daily in the regular work of the cars are good enough to warrant this belief and confidence. Electricity in its manifestations, applications and capabilities, has been hitherto a subject, the knowledge of which has been confined mainly to scientific circles, but it is evident that the time has come when it will be put in harness in place of the horse to draw cars and to perform many other duties, which a few years ago would have been considered entirely chimerical and visionary. So long as the oxidation of metals or other chemical action was the only available method by which electricity could be produced, the expense attendant upon such means limited its use to a very narrow sphere. Since, however, steam power and water power have been so successfully employed to generate electricity, and to do it so cheaply, the range of its usefulness and application has been wonderfully enlarged from year to year. It is not intended in this paper to make use of scientific terms, or to discuss the question from any standpoint but that of practical observation and experience; nor is it intended that any comparisons shall be drawn between electric motors and steam locomotives, but there is a wide field for work in which neither the locomotive nor the horse is able to satisfactorily accomplish the duty called for.

The systems at present in use for electrical propulsion of cars are divided into two classes.

First, that in which the electricity is conducted from one or more active generating sources along a suitable conductor or conductors to be used in the cars with proper return connections; and secondly, that system in which the electrical power is obtained from accumulators or secondary batteries carried along with or within the body of the car. Of the first there are several methods, namely, that in which the electricity is carried along a conductor above the ground, considerably above the car, either directly over it or toward one side.

That in which the electrical conductor is situated at the side of the railroad and elevated a few feet only above the ground.

That in which the electricity is carried upon the surface, either by a third rail or other conductor, running on the level of the ground or pavement.

That in which the electricity is carried beneath the surface by a conductor placed within a suitable conduit for its protection, access being had to said conductor through a slot in the top of the conduit, so as to allow of electrical connection with the motor on the car.

The plans of having the conductor along the surface or at the side of the railroad not much above the surface have so many evident and practical disadvantages that they need not be taken into consideration in this paper; therefore the question is reduced to the three methods of overhead conduction, underground conduction and storage batteries.

It is evident that better service must be furnished at the same cost, the same service furnished at a cheaper rate, or that both objects combined shall be attained by the use of electricity before it takes the place claimed for it. The writer believes fully that the last proposition of both better and cheaper service has already been proved by actual service and daily use, but in the nature of things, improvements upon the present methods will be discovered, and "the survival of the fittest," which applies as well to mechanical appliances as to animated life, will by its inexorable laws weed out and discard those which are deficient or incompetent. There are so many intelligent persevering and scientific minds engaged in active experiments and researches into the mysteries of Nature's powers, and more especially those relating to electricity, that discoveries are constantly being made, human knowledge in this age extending more rapidly than at any previous time. The subject is fascinating, and the prizes sought after are brilliant and valuable. The increased cheapness in production of electricity which may fairly be assumed for the future, will of course add to the advantages, and enlarge the scope, of its use. At present there are many places where electricity can be generated at a nominal cost by the use of water power, and this energy can be carried a number of miles without any loss or leakage of practical consequence. Where this can be done of course the parties have special advantages. So also there are many towns and cities in coal regions, or natural gas regions, where the same result of cheapness in production can be obtained, although by different means. As a case in point, it may be mentioned that the electrical railway in Scranton, Pa., has its power station located about midway of the route, and immediately at the foot of a large hill or great mass of hundreds of thousands of tons of culm, which is principally composed of the small fine particles of coal produced in mining, or left after the screening and preparation of the commercial sizes of coal for the market. This has been accumulating for many years, is still accumulating, and has hitherto been considered only an inevitable nuisance, which the mining proprietors would gladly have given away for nothing to get rid of it, and not have it occupy their land. The price which the railroad company pays for this culm is but ten cents per ton, and as it only has to be wheeled through the door of the engine house, the whole distance from the culm hill to the furnace under the boilers not being over fifty feet, and as the whole consumption per day is on the average but five tons, or in money value but fifty cents per day, it is evident that the cost of electricity in this case is exceedingly small indeed, that sum being sufficient for the fuel to produce the steam power which generates electricity enough to run four and sometimes five cars, carrying at times seventy-five passengers each over a railroad track about four and

1. Read before the American Street Railway Association, Philadelphia, October 19, 1887.

Digitized by Google

a half miles in length, having long grades, a number of which are five or six feet to the hundred, and the steepest of which is seven and a quarter feet per hundred. The tractive power required upon some of these grades is still further increased by curves or switches occurring on them. It may be well to mention some other points about this railroad in Scranton, which has been running about a year, with great success, and exhibits in many respects a favorable example of an electrical railway with overhead conductors. The cars have four wheels; two of them are open cars, each carrying one motor of 20 h. p. The motor is placed in the body of the car midway of its length, and all four of the wheels are driving wheels, the connections between the motor and the wheel axles being made by means of chains and sprocket wheels. Three of the cars are closed cars, each with one motor of 15 h. p., which is placed on a closed platform at the forward end of the car. In these the forward wheels only are driving wheels, and their connection with the motor is made in the same way as on the open cars, with chains and sprocket wheels. The company will shortly place four more cars upon the line, each with a motor of 25 h. p. These larger cars are intended not only to propel themselves, but to be able each to haul in addition two other cars loaded with passengers up all the grades. The running time of the round trip on the main line, being in all eight miles, is one hour, which includes all stoppages and the waiting at each end of the route, so that the average speed attained is more than eight miles per hour. There is no difficulty in going much faster; in fact, the men in control of the cars have to be watched to prevent their running at excessively high speed, particularly on the return trip to the city, where the grades allow the car to be run for most of the distance by gravity alone. At the generating station there are two stationary engines of 180 h. p. each, two dynamos of 100 h. p. each, and four boilers of 100 h. p. each. Only one engine and dynamo, however, and two of the boilers are in use at any one time. The railway company expects also to furnish in the future electricity for the lighting of the town of Dunmore, situated at one end of the line, by which the income of the company will be materially increased. The duplicate engine and dynamo and the duplicate set of two boilers are for the purpose of providing against contingencies of accident to those in use, and also to allow of alternations in service, thus giving opportunities of frequent examination and inspection. Upon this railway, as before stated, the overhead system of conduction is employed, having flexible connection between the motor on the car and the carrier traversing the conductor, which is a solid copper wire of five-sixteenths inch diameter, suspended on a part of the route from transverse wires attached to wooden poles placed on both sides of the street about one hundred feet apart lineally, about twenty feet high and about six inches in diameter at the surface of the ground, and on the rest of the line suspended from arms projecting sideways from wooden poles at the side of the railway about twenty feet above the ground. The line is a single track railroad with several turnouts or passing places, at which points the electric overhead conductor branches off over the side track also, and an ingenious system is in use by which the carrier, running upon the overhead wire, with two grooved wheels of about two and a half inches diameter automatically shifts the connections at the points of divergence from the main line, so that the carrier always follows that one of the overhead conductors which is above the track upon which the car is traveling. It is contemplated, however, to use two separate and independent overhead conducting wires throughout the whole length of the route, so as to avoid the possibility of any difficulty with the carriers at the points of intersection at the turnouts, although this has not happened often. The return current of electricity is taken by the rails. The electrical current has a tension of about six hundred volts, which while sufficient to give a shock, could not produce any dangerous effect on man in case the current should by any means be diverted. Part of the road is laid with tram rails and the rest with T-rails, and a part is paved and the rest unpaved, so that these different conditions, in connection with the many grades and the curves and turnouts give ample opportunity to thoroughly test the working of the system. Although the overhead wires in this case do not present any more unsightly appearance than the numerous telegraph cables and wires to which we are so accustomed, it is, however, evident that the use of the overhead system will be prohibited in most cities and towns, especially since the general determination to place all electrical wires through cities underground. The noise of the carriers running on the conductors is not much, although it can be readily noticed, but the noise produced by the motors and the chain and sprocket connections is quite considerable. This latter could be entirely avoided by the use of a noiseless motor and a better method of connection, of which motors and connections there are several kinds easily obtainable. Noiseless, efficient and durable electric motors suitable for use on cars can be had in which the weight per horse-power does not exceed sixty pounds.

In a paper of the length to which this must necessarily be limited, it will be impossible to do much more than treat of the subject in a general manner, but it can be stated specifically and certainly that electric railways with overhead conductors have demonstrated beyond a doubt their capability to propel a few cars, even if heavily loaded, at less cost and much greater speed than could be obtainable on railways operated by horse-power. This is true in places where the coal required must be bought at usual rates and the exceptional advantage of fuel at merely nominal cost does not exist as at Scranton, and likewise at Wilkesbarre, where an electrical railway is under construction, upon which the cost of coal used will not exceed sixty or seventy cents per day for five cars.

In the case of electrical railways with underground conduction the effort has been made to give all the advantages of the overhead system, and at the same time remove the objection which, in most places, is absolutely prohibitive, of having the conductors and poles, or other supports, obstructing the streets. In doing this, however, great difficulties arise, some of them of a very serious character. The costly conduit, with the needful arrangements for drainage and for cleaning out, together with the increased care necessary to provide against the considerable loss or leakage of electricity, which, nevertheless, generally takes place in spite of all precautions, detract greatly from the apparent advantages of the plan. Many inventions have been patented, and numberless devices contrived, to overcome the many objections of this method, but there is great room for doubt whether practical success has yet been obtained.

Neither by overhead nor underground conduction have more than a few cars, as yet, been moved simultaneously upon railways, although many ingenious arrangements are offered by various parties, who confidently assert they can run any required number of cars. This, however, yet remains to be proved. Both plans, also, are open to another serious objection in the entire stoppage of travel on the whole line in case of breakage or derangement of any part of the conducting apparatus or the generating machinery. In this respect they are under the same disability that the cable system of car traction is hampered with. Possibly, by suitable arrangements of duplicate engines, boilers and dynamos, duplicate conductors, and auxiliary, sectional, or relay systems of conduction, this disability, threatening as it appears to be, may be so reduced as to be of no great detriment. This, however, also remains to be demonstrated. Taken altogether, underground conduction does not compare favorably with overhead conduction up to this time. One great trouble with the latter plan, however, is that although it can be used to great advantage and economy on lines running a few cars in towns, or in suburban districts outlying large cities, it will probably never be allowed by the municipal authorities in large cities, which, of course, are the very places where the advantages of electrical propulsion are needed the most. To move a large number of cars, as for instance upon the Third avenue or Broadway lines in New York city, the electrical conductor, whether overhead or underground, must be of great size if the current is of low tension; while on the other hand, if a small or moderate-sized conductor be used, the current must then be of dangerously high tension, and of course it would then be very difficult to avoid great loss of electricity from leakage.

There remains to be considered the accumulator, or secondary battery system. In this each car carries its own supply of energy, and is entirely independent of any method of continuous electrical conduction. No change of track or roadway is required, nor any costly conduit or unsightly poles, or other supports, while the cars can run anywhere that a car can be taken by horses. These points are of immense advantage, and are the chief merits advanced by its advocates, independent of its economy over horse-power.

In practice, cars of the size of the usual two-horse cars are provided with about eighty accumulators, weighing, when filled with fluid and ready for use, about 40 pounds each. These cells are placed under the seats, one-half being on each side of the car. Their combined weight is 3,200 pounds, and the weight of two motors, each of 5 h. p., should not, together with their connections to the car axles, exceed 800 pounds, so that the additional weight imposed upon the car is, say 4,200 pounds, which allows 200 pounds for the apparatus to control the current and for other electrical appliances. This added weight, if placed upon a four-wheel car, may be of disadvantage to the car or to the track. If this should be the case, the difficulty is removed by the use of eight wheels on two swinging trucks, which support the car much better, and distribute the weight upon the track. Both these kinds of storage battery cars are in service with entire success. The charging of the cells is done by a dynamo driven by steam power, or any other desirable means, and it takes four hours to charge cells which are able to perform four hours' work. To remove from the car the cells which have done their work, and to replace them by freshly-charged cells, takes no more time than the time required to change horses. It requires 10 h. p., exerted for four hours, to charge the batteries or cells of each car, so that 40 h. p. hours are needed to accomplish it.

The cost of running large stationary steam engines, of say 200 to 400 h. p., constructed with the modern improved cut-off appliances and other economical devices, has been found, after extensive investigations, not to exceed two-thirds of one cent per horse-power hour.

Digitized by Google

The allowance is a liberal one, and is above, rather than below, the actual average cost, including fuel at average market prices, attendance, repairs to engine and boilers, oil, etc. We will, however, take it at one cent per horse-power hour: Forty h. p. hours at one cent costs 40 cents, which is the cost of four hours' car service, and as the day's work of a car should be taken at 16 hours, we have as the whole cost of a day's supply of electricity four times 40 cents, or $1.60. Since four teams of two horses are required to draw a car for 16 hours, and as one additional horse per car is the usual allowance for sick or disabled horses, nine horses per car are needed for a day's work, which, at 50 cents per horse for feed, bedding, attendance, shoeing, etc., is $4.50, against $1.60 for the storage battery electricity. Making extraordinary allowance for possible errors in this comparison, the difference is still astonishing to those who have not looked into the matter critically. With motors properly constructed a speed of eight or nine miles per hour is readily accomplished—in fact, eight miles per hour may be taken as the speed at which such motors will work to the best advantage, and return the greatest percentage of mechanical efficiency. The requirements of street-car service demand variable rates of speed, as for instance, in crowded streets, behind other vehicles, or in turning curves and entering switches it is necessary to go slowly and cautiously; and the weight of the load carried at different times will vary from an almost empty car to one overloaded. These conditions, together with increased power needed to ascend grades and to start loaded cars, especially on up grades, call for electric motors which will under such greatly varying circumstances respond at all times almost equally well.

There are motors which, while engaged in performing an equable work and running at an equable speed, for both of which purposes the motor was specially made, will return 90 or possibly 95 per cent. of efficiency, while the same motor when run at some different speed or under some different load may return but 30 or 35 per cent. So that the average performance of such motors in street car service would probably give only 50 per cent. return of efficiency. Motors can, however, be obtained which will under all the variations of street car work constantly return 75 per cent. of efficiency.

The durability of storage batteries is a point which those interested in other systems are very prone to doubt, but it has been proved in actual use in cars that they will continue in good serviceable condition for 18 months or two years. Makers of these batteries offer to guarantee them good for two years of street car service. The lead-lined wooden containing boxes will last for many years, the negative plates are good for more than two years, while the positive plates are certainly good for 18 months, if not more.

The plates being of lead and lead oxide are still of value when they become unserviceable, for the metal can be recast into new plates, and the lead can be recovered from the oxide. The first cost of storage battery cars and the engine and dynamos is at present prices considerably more than the first cost of cars provided with suitable complement of horses and harness, but when the saving in first cost obtained by dispensing with the ground and the stables required for horses is taken into account, the balance will, in many cases be in favor of storage battery cars. This is, of course, applicable more particularly to large cities where ground is very valuable. By methods now being introduced into the manufacture of storage batteries, their production will shortly be made at a reduced cost, and their durability increased at the same time.

It should be remembered that the increased speed at which electric cars can travel is so much greater than horses could draw them, that two cars can readily do the work of three horse cars, especially as the electric cars require no time for resting at the ends of the route; but although they can easily do this, so much increase of speed would not be allowed or be practicable through the streets of most cities or towns. It could be done with safety and advantage through wide streets or avenues and in suburban districts. It will, however, be perfectly safe to say that three electric cars can do the work of four horse cars, and, if desired, they can at the same time be of greater capacity than horse cars, for while the horses can do no more, no such difficulty exists with electricity. Without referring to the excessive first cost required for the expensive cable traction system, and comparing the first cost of the entire plant and equipment needed for a storage battery electric railway on which three cars will perform the service of four horse cars, with the first cost of the entire plant and equipment of a railway using horse-power, it will be found that the advantage will in most cases be in favor of storage electricity. Let us now compare the operating expenses.

Running expenses of four two-horse cars for one year, to wit:

Conductors, 365 days, at $3.00 each car per day of 16 hours.....	$4,380
Drivers, " " 2.50 " " "	3,650
36 horses, " " .50 each per day.....	6,570
	$14,600
One year's deterioration and repair of 4 cars at $200 each.....	800
" " of 36 horses, at $40 each.....	1,440
	$16,840

Running expenses of three storage battery cars for one year, to wit:

Conductors, 365 days, at $3.00 each car per day of 16 hours...	$3,285.00
Drivers, " " 2.50 " " " ...	2,737.50
Electricity, " " 2.00 " " " ...	2,190.00
	$8,212.50
One year's deterioration and repair of 3 cars, including dynamos, storage batteries and motors, $1,600 each.....	4,800.00
	$13,012.50

This leaves a balance to the credit of the storage battery cars of $3,827.50.

The fact of each storage battery car carrying within itself its own energy gives to the individual cars an independence of action which neither the cable traction plan nor the overhead or underground system of electrical propulsion possesses, for all of these depend upon central sources of power, which may at any time be interrupted, so that breakage or accident to any part involves the stoppage of the whole line.

In a sanitary and cleanly point of view the withdrawal of the car horses from our streets would be of great benefit, and this would be accomplished without having, as in the case of the cable railway, an open drain, which, although supposed to be kept clean, in fact nearly always contains a deposit of street refuse to a greater or less extent.

The leakage of electricity in storage batteries, charged but not in use need not be taken into account for any length of time that cars would probably stand idle. In fact, the leakage from batteries in good condition would not exceed 10 per cent. in three months.

The percentage of mechanical energy given by the steam engine which is recovered in actual work under the variable conditions of street car service on the driving axles, with storage battery cars properly equipped, is at least 40 per cent., and with electricity by direct conduction at least 50 per cent. In cable traction, after deducting the power needed to move the cable and to revolve the wheels guiding and carrying the cable, not over 25 per cent. is left for drawing the cars, and on some cable railways even less.

The increased speed so easily and advantageously obtained on electric railways as a class, not only enables three cars to do the work of at least four horse cars, and effects the great annual saving shown above, but it has a tendency to invite travel and thereby increase receipts, also to give street railways the opportunity to extend their lines advantageously further into outlying districts and to compete on better terms with elevated roads and steam railroads than would be possible with horse-power.

The rapid deterioration and destruction of street car horses shows the exacting and terrible nature of their work, although it is for only four hours per day. Their powers are already overtaxed, and they can do nothing more either in speed or in load carried.

Electric cars, by dispensing with horses, allow more room in the streets for other vehicles, and this advantage in crowded streets is of moment. Take, for instance, Washington street, Boston, or Broadway, New York, and it will be readily seen that this relief to the clogged traffic would be great.

Electric cars can go backward or forward with equal facility, they are under perfect control, can stop and start more quickly than horse cars, and in case of delay can make up lost time. They never get sick with epizooty or other disease, and during strikes or other periods of enforced idleness do not require to be fed. On down grades they will run by gravity without the expenditure of other force, and on level or nearly level stretches a very little electric energy continues their motion when once they are started.

The electricity, beside running the motors, will supply the car with incandescent electric lights, actuate an electric signal going, and operate electric bells for the use of the conductor and passengers in stopping or starting the car. It is usual to have the regular hand brake for stopping the cars, but the motors can be instantly reversed by electricity if desired. This method, however, should only be employed when it is necessary to stop the car very quickly to avoid accident, or for some other imperative reason. By this means the car can be stopped in much less distance than is possible by the hand brake, which, of course, operates with the same efficency whether upon electric cars or horse cars.

It has been questioned whether in winter, when the tracks are liable to be obstructed with snow or ice, the electric cars will be able to propel themselves, owing to the fact that they obtain their power of propulsion from the adhesion of the wheels upon the rails, so that if the wheels are prevented from reaching the track there would be a great liability of their slipping and turning around without giving any forward motion to the car itself. In answer to this, it may be stated that during last winter, on the electric railway in Scranton, having the overhead conduction system, and from experiments made in Philadelphia with a storage battery car, it was found that there was no unusual difficulty presented in snow storms, the wheels, owing to the added weight, settling more readily through the snow, and thus reaching the rails. Upon roads properly equipped with snow plows, or snow sweepers with revolving brushes, propelled by powerful

Digitized by Google

electric motors, the clearing of snow from the tracks would no doubt be much more efficient than horse-power could effect. Street car electric motors of 50 h. p.—or more, if required—can be as easily made, and are as easily controlled, as motors of 5 or 10 h. p., so that electricity has ample ability to keep the tracks clear from accumulations of snow. As with locomotives, sand-boxes should be placed upon electric cars, so that if any slipping of the wheels should be observed, either from the greasy, slippery condition of the track—sometimes seen in damp weather when the streets are not properly cleaned—or from snow or ice upon the track, the driver, by opening a suitable valve, can let out a little sand upon the rail, and at once overcome the difficulty.

It is sometimes asked why two motors of 5 h. p. each should be needed upon a car usually drawn by two horses. In explanation of this it may be stated that a car horse can, and very often does, exert for a short time, in starting a car or upon steep grades, a force of 5 or even more h. p. A mechanical horse-power is the measure of the moderate duty which a horse can constantly and regularly exert day after day, in a regular day's work, without injury; but car horses are constantly temporarily called upon to exert unusual and unreasonable power, which is the reason they are so rapidly destroyed in street car service. It is evident therefore that the electric motors must be able, when called upon, to exert the same power that the horses, under pressure, can be made to perform temporarily, so that a maximum of 5 h. p. in each of the two motors will develop only such force as the requirements of street car service are constantly demanding during short periods of time.

It is not intended in this report to indicate that cable railways for use on steep hills or high grades will be superseded by electric railways, for the latter are limited to such grades as the adhesion of their wheels upon the rails will enable them to surmount, just as in the case of the steam locomotive, so that there is a suitable and proper sphere of usefulness for cable railways in the many places for which they are particularly adapted.

It has been proposed to increase the tractive power of electric cars upon inclines by causing magnetic attraction to be developed between the wheels and the rails, and also by the use of other devices. All these methods present complications which probably will more than outweigh the advantages sought to be attained.

In developing the best construction and management of electric cars and railways, careful attention to details, some of which at first sight may appear trivial, should be exercised, in order to obtain the best results, no matter which of the three plans be adopted. It should, however, be said that in practice at the present time the running of electric cars requires no more intelligence or skill than the running of horse cars, and also that the electric current, with continuous conduction, on lines using a few cars, need not be of such tension as to endanger human life, 500 volts being sufficient. With the storage battery system the tension of the current is so low, 160 volts being sufficient, that no shock whatever could be experienced by a man taking through his body the whole current required to propel the car. This has been repeatedly done, some of the people stating they felt nothing at all, and the others no more than a slight tingling sensation.

The term "storage batteries" so generally in use, is apt to give a wrong impression, no electricity whatever being stored or contained within them, for in charging the batteries a chemical action is forced to take place, and, when this chemical action is allowed to reverse itself, electricity is generated thereby. The car motor immediately uses this, and when the motor is stopped the chemical action and, therefore, the generation, of electricity ceases.

In this report care has been taken not to refer by name to any patented inventions, or to recommend any particular make of electrical appliances. As to these matters, those proposing to use electricity, whether by overhead or underground conduction or by storage batteries, should, of course, be careful to select such methods as are the most reliable, efficient and durable, and to deal with parties not only responsible as to the validity of their patents, but capable of doing what they undertake to perform.

Any one who peruses the railway journals, and notices the number of electric railways now in operation, and the still greater number of those in course of actual construction, or projected, has cause for suprise, if he has not been closely following the course of events.

That electricity, by some of the present methods of its use, or by better ones yet to be invented, will entirely supersede the use of horses and cable traction upon all street railways, excepting under the special conditions for which cable traction is occasionally applicable, is a question that admits of very little doubt.

NOTES ON LONG-DISTANCE TELEPHONE WORK.[1]

BY E. J. HALL, JR.

To talk between points hundreds or thousands of miles apart as though standing face to face is a feat, the accomplishment of which may well call for our best efforts. Apart from all commercial considerations, it presents the fascination of an unsolved problem. No sooner had the telephone exchange been an established fact than inventors and "promoters" began to suggest all sorts of visionary schemes for long-distance telephone work.

Of the early experiments, none were more successful than the trials between New York and Chicago, speech being transmitted between those points by a number of people with fair results. These trials showed that, under certain conditions, it was possible to talk for a distance of over a thousand miles. We all know, however, that commercial business could not be carried on under these conditions, as all successful tests were made when the wires were free from outside disturbances. As they were clear only on Sundays, and even then only when there were no storms or heavy earth currents, the effect of early experiments was rather to discourage work in this direction.

In Canada, and in the western states, some long lines have been operated with success, the distances covered being far in excess of any practical working lines in the eastern states. The reasons for this have often been discussed in our conventions, and I will not go into them now; it is enough to say that, giving all due credit for what has been accomplished, no large business can ever be worked up on the basis of using grounded circuits, owing to the inevitable "cross-talk" between parallel wires. The first really practical success in talking over long distances was over the copper metallic circuit constructed between New York and Boston, by Mr. T. B. Doolittle, for the American Bell Telephone Co., in 1883. The distance was about 300 miles, and I call it the first practical success because it was the first circuit that worked at all times regardless of outside electrical disturbances.

Early in 1885 I was appointed by that company to take charge of the development of this branch of telephone service, and the American Telephone and Telegraph Co. was organized to carry on the work. At the outset, it was decided that only copper wire in metallic circuits should be used, and that nothing should be spared to make the plant, in every respect, as perfect as we knew how to build. A builder whose work is known to you all (Mr. W. H Fairbank) was appointed general superintendent of construction, and the first line was constructed between New York and Philadelphia. The specifications for this line required the use of poles not less than seven inches in diameter at the top and from forty-five feet upward in length; to be set six feet in the ground on straight lines, and seven feet on corners or sharp curves. The poles had gains for seven ten-pin arms, and three arms were at once put on, carrying twenty-four copper wires. In addition to the copper wires, one No. 8 iron wire was strung on a top pin to strengthen the line (especially during construction). The utmost pains were taken in guying and bracing, and the good results of this care in building have been fully demonstrated by the nominal expense of maintaining the line since it was finished.

There are nearly three miles of submarine cable in this line, and all crossings are made with four seven-conductor kerite cables. In three of these cables the conductors are each composed of three No. 18½ B. W. G. copper wires, twisted together and insulated to $\frac{3}{64}$ of an inch, and the cables are armored with eighteen No. 4 galvanized iron wires. The fourth cable has conductors of three No. 16 wires, twisted together and insulated to $\frac{3}{64}$ of an inch, and is armored with eighteen No. 2 galvanized iron wires. The cable houses are large, dry and well lighted, and special care was taken to guard against lightning, and against bad connections and leaks in the terminals. All underground and aerial cables are of large conductors, heavily insulated, and the general result has been a line which, for nearly two years, has worked with uninterrupted success. Wind, sleet, lightning and electrical storms have, so far, passed over it without causing more than the most trifling damage, and we have secured one of the most essential elements in commercial business—reliable service.

That this line would "talk well" no one questioned, as the distance (about 100 miles) is far within the limit which previous experiments had shown to be entirely practicable. I will say here that we have not yet reached the limit of distance, but having worked over 400 miles, we know it exceeds that. It is probable that the progress of electrical development will keep the possible limit up to the distance over which it will be commercially profitable to supply this service.

Since the completion of the Philadelphia line, we have started lines of a similar character between New York and Boston (250 miles), and New York and Albany (160 miles). The Boston line will be ready for service in a couple of months, and the Albany line by the end of this year.

Having completed our first line, we were at last in a position, not to commence business, unfortunately, but to work out patiently and thoroughly the problem of making these lines serviceable. Many of you will remember that at our Providence meeting, two years ago, we discussed the question as to whether there would be any serious "cross-talk" between metallic circuits when we had a large number of them working on the same line of poles. Opinions then varied, but the Philadelphia line showed at once that the interference between metallic circuits was, practically, about as bad as between grounded circuits. We determined not

1. Read before the National Telephone Association, Pittsburgh, Sept. 26, 1887.

Digitized by Google

to offer an imperfect service to the public, and months of hard work resulted in perfecting a simple and practical method of absolutely removing all trouble from this cause. Meantime, the matter of providing suitable apparatus and methods for working metallic circuits quickly and reliably with each other, and with grounded circuits at the terminal stations, was receiving constant attention, and we are now able to do this work satisfactorily, although this part of our service will always be one in which we may expect continued improvement.

As an illustration of the difficulties encountered: The repeating coil, which gave excellent results when used between New York and Philadelphia, was a complete failure when used between New York and New Haven, and a long course of investigation and experiment was necessary before we discovered the cause and provided a remedy. We have completely reversed the old idea that "Anything is good enough for a telephone line;" now I would say "Nothing is good enough." But a friend suggests that, strictly construed, my statement makes the matter worse. At any rate, the best is not too good, and I am confident that the future experience of all of us will convince us, if we still doubt, that the best is emphatically the cheapest in the long run.

The telephone business has now been established long enough to bring us fully into the reconstruction period—the haste of early construction is over, and the problems of underground construction in our larger cities, the general use of cables in all exchanges, the necessity of providing improved switching facilities for the masses of wires which centre in our large offices, and the complicated work of providing quick and certain means of communication between our scattered exchanges, are matters which call for the expenditure of much brain-force and money before the "second construction" gives us a perfected system.

When we look over the history of the development of the telegraph, and see the slow and painful progress made by the pioneers of that enterprise, it may well be a matter of surprise and congratulation that the telephone has so quickly found a profitable place in the business world. To a great extent that place had been prepared by the changes in business methods wrought by the railroad and telegraph. The use of local private telegraph lines (and especially the District Telegraph service) was of especial value to us in preparing the way, by educating people in using electrical appliances for securing quick local communication.

Undoubtedly, the use of the telephone has made far easier the work of introducing the electric light. This process of education is going on at a rapid rate, and the use of private wires between distant cities, which is now so common as to be almost a necessity in certain lines of business, and the extension of our "extra-territorial" telephone lines, is preparing the way for the long-distance telephone.

I am often asked the question, "How can you expect people to use the telephone on your long lines, with rates five or ten times as high as the telegraph charges?" The answer is simply this: The telephone has a field of usefulness entirely separate and distinct from that occupied by the telegraph. Of course no one will pay a dollar for a telephone message, when he can accomplish the same result by sending a telegram for ten cents; neither will he pay ten cents for sending a telegram, when he can accomplish the same result by sending a postal card for one cent. If the long-distance telephone competes with anything, it is with the railroad, and it does that in the same way and about to the same extent as the local telephone competes with livery stables and street cars.

As a matter of fact, the service offered by the telephone is something which is entirely new, and when people learn its uses, its place will be just as securely fixed, as a most important factor in the transaction of business between distant points, as it is now in local service, and the railroads and the telegraph companies will not suffer any more than the livery stables and street cars do now from the telephone exchange. When people ship freight for which they are in no hurry, they send it by a sailing vessel or by rail as ordinary freight; when time is of some importance it goes by steamer, or by a fast freight line; when goods are perishable, or time is important, shippers send by express or by special messenger.

So when in communications time is not important, people write letters; when greater haste is necessary, they send telegrams; but when time presses, and there is urgent need for haste, they telephone. When the nature of the business requires personal communication, question and answer, the railroad or the telephone line must be used, and this is our field; quick communication, with instantaneous replies, and prolonged personal interviews. I might give scores of illustrations, but two will suffice: A New York lawyer recently called up by telephone a lawyer in a city nearly a hundred miles away, engaged him for an important case, dictated a lot of legal papers, and, inside of an hour, was able to file attachments securing for his clients their interest in a large amount of property which would otherwise have been lost. This illustrates one class of service; the other is the case of the Pennsylvania Railroad, which has ample telegraphic facilities between New York and Philadalphia, but, in addition, leases a private telephone circuit, so that the officers of the road can, without the intervention of operators and the delay of writing messages, carry on conversation between the two cities.

The contracts for service which we are daily making, and the emphatic commendation of business men who are using our lines, prove beyond question that the long-distance telephone is wanted, and that good service will be paid for at rates which will make it profitable to supply the demand. It is just as certain that there is no demand for, and no profit in attempting to furnish poor service, either in trunk lines or exchanges. Just what constitutes "poor service" is a question upon which we may not all agree. I think Mr. Jacques defined good commercial service well in a discussion of this question recently, when he said in substance that he considered a good commercial line to be one over which non-experts could converse about subjects with which they were not both familiar, without repetitions. Judged by this standard, how many exchange and toll lines would stand the test?

CORRESPONDENCE.

NEW YORK AND VICINITY.

Subway Matters.—The State Assembly Telephone Investigation Committee.—Abolishment of the Ten Cent Telegrams.—Asbury Park will have no more Wooden Poles.—End of the Electric Light Contest at Elizabeth, N. J.—The Baxter Electric Motor Company to have its new Headquarters in New York.—Mayor Cleveland, of Jersey City, on Corporation Privileges—Joint Meeting of the Institute of Electrical Engineers and the New York Electrical Society at the Exhibition Building.—An Interesting Program for the Season laid out by the Institute of Electrical Engineers.

THOSE gentlemen who labored so arduously to secure the passage of an "underground" law, probably had a very misty idea of the state of affairs it would bring about. Contracts for electric lighting have been awarded by the city authorities, and no conduits have been provided in which to place the necessary wires. Permits are sought to place the wires overhead, and the Board of Electrical Control is divided in itself as to the policy to be pursued. The mayor loses no opportunity to growl about the streets being torn up, and altogether no one appears to be satisfied. The conduits which are being laid down-town are primarily for the accommodation of the telephone wires, and it is believed that their occupation will lead to much needed improvements in the telephone service.

The state assembly telephone investigating committee has been continuing its researches by an examination into the finances of the Bell Telephone Company of Buffalo. Only two complaints were made by citizens, both of which were directed at the toll system. The secretary of the company, Mr. H. C. Palmer, described the process of watering the stock. It was organized in 1879, with a capital of $30,000, which was all subscribed by citizens of Buffalo. During the same year the capital stock was increased ten-fold, $140,000 being paid for in cash, and the remainder distributed *pro rata* among the stockholders. In June 1883, the stock was doubled to $600,000, out of which $210,000 went to the parent company to pay for the franchise, $56,840 retained as treasury stock, and the remainder distributed as a stock dividend to the shareholders. The treasury stock was subsequently sold to provide money for extending the business. The American Bell company now owns only five shares less than half the capital stock of the company. A table was submitted to the committee showing the earnings of the company since 1880, to have been $1,210,487, the expenses during the same time being $919,017. The cost of the Rochester plant was $100,000, and that of Buffalo $200,000, while it was estimated that the proposed underground work would cost about $200,000 more. The committee will meet in New York, November 10.

The abolition of the ten cent rate of telegraphing since the sale of the Baltimore and Ohio company is arousing the usual amount of newspaper indignation. The people who complain, could easily economize in other directions, say by patronizing Bowery lodging houses, and dime restaurants. They might not get any more for their money than they actually pay for, but that is not expected in a strictly legitimate business. Perhaps a slight boom will now be given to uncle Sam's special delivery system, which has languished since the novelty of the scheme has worn off.

The Asbury Park, N. J., commissioners have ordered that no more wooden poles shall be erected along the line of the sea-shore electric railway, and that those already in position shall be removed. The officers of the road appealed in vain to have the resolution rescinded. Owing to the peculiar form of personal government existing in the borough of Asbury Park, the ideas of the commissioners will be carried out, and the wooden poles will have to go.

The electric light war in Elizabeth, N. J., has finally been settled by an amalgamation of the interests of the Schuyler and the newly formed Westinghouse company. By this movement

Digitized by Google

it will be possible for the work to go forward more rapidly, and it is possible that a considerable number of incandescent lamps may be introduced during the coming season.

The Baxter Motor Company, of Baltimore, is about making arrangements for the establishment of their headquarters in this city. The various companies engaged in the motor business appear to be thoroughly satisfied with the outlook, and the very instructive exhibit of its possibilities as practically demonstrated at the electrical exhibition of the American Institute will, no doubt, give it fresh impetus. The exhibit of the Baxter company at the electric light meeting in Boston, was in itself a revelation to many of the people in that city, who then realized for the first time the actual progress which was being made in that line.

Mayor Cleveland, of Jersey City, has sat down with a very forcible veto upon an ordinance passed by the Board of Aldermen granting unusual privileges in the streets to the Jersey City Electric Light Company. In the course of his veto message after calling attention to the "enormous and unrestrained power" which they propose to grant the company, he goes on to show how the city is already corporation-ridden, in the following language:

> The corporations have been ingenious in seizing upon pretty much everything tangible within the city limits. They have taken rights and privileges from citizens without even the form of law. They have taken whole streets to the extent of more than a million dollars of value within my recollection without a dollar of compensation. They have spread their dust and cinders upon our roofs and set fire to our buildings. They shriek through the towns nights till they destroy all comfort of persons and reduce the value of property, but it would seem to me that they might leave us the shade trees that are none too plenty now. They are the pride of the well-to-do and the comfort of the poor, and I am sure your honorable body did not intend to grant the right to destroy them.

He closes his message by saying:

> A simple and fair and honest ordinance could easily be prepared, giving this company all it needs for its own purposes, embodying the suggestions above made, and one that no fair mind could fail to approve. But the present ordinance is not honest. It is unique. It is the most ingenious piece of crazy patchwork of surprises I have ever seen in so few words, and I do not see how any member of your honorable body can vote for it after attention has been called to its powers and omissions.

The mayor did not forget to intersperse the stereotyped remarks regarding overhead wires, and the probability of their being placed underground in all large cities at an early day.

A joint meeting of the American Institute of Electrical Engineers and the New York Electrical Society, is to be held in the manager's room at the Exhibition building of the American Institute, on November 9th. A paper will be read by Mr. Charles Cuttriss, electrician of the Commercial Cable Company, upon the subject of "Recent Improvements in Apparatus for Ocean Telegraphy." This is a branch of electrical work which has been very imperfectly understood by a large portion of our American electricians, and as this paper is to be accompanied by an exhibition of the siphon recorder, the proceedings will be exceedingly instructive. The officers of the Institute intend to make the present season a most interesting one, by bringing forward most important topics for discussion and publishing them fully and promptly for the benefit of the members in all parts of the world.

New York, Oct. 24th, 1887.

PHILADELPHIA.

How the Westinghouse-Thomson-Houston Combination is regarded in Philadelphia.—The Morse Underground Co.—The Mitkiewicz Chinese Syndicate.—Recognition of Superintendent Wm. B. Gill's Services at the celebration of September 15th.—Restraining orders against Infringers obtained by the American Bell Telephone Co.—Cape May, N. J., to have an Electric Railway.

THE announcement of the combination of the Westinghouse and the Thomson-Houston Electric Light companies, has undoubtedly caused something of a flurry in electric light circles. It is believed that other combinations will follow, and that the most important developments are yet to come. The Electrical Trust, through which the majority of the stock of all the electric lighting companies which have franchises in Philadelphia, except one, is controlled, does not itself operate the corporations, and none of them have lost their separate existence or corporate individuality. The trustees hold, under certain conditions, a majority of the stock of each company (except the Keystone), which they have the power to use under the provisions of the trust. In fact, the trust is a pool under another name, with such legal protection to those who are in the deal as the trusteeship can give them. The trust does not protect any of the combinations which are not protected already by the patent recently granted to Mr. Edison for the multiple arc system of distribution. It is a combination simply of the local companies; and if Mr. Edison's parent company should bring a suit against the Maxim company, for instance, which is represented in the trust, and if the courts should sustain the patent and decide that the system of distribution used by the Maxim or United States Electric Light Co. is an infringement of the Edison patent this corporation would be compelled to do one of three things—compromise with Edison, find a new system of distribution, or go out of business. A thoroughly well-informed electrician of this city says of the combination between the Westinghouse and the Thomson-Houston companies: "In addition to the better position in which it places the Westinghouse company in any fight over the use of the multiple arc system of distribution, the two companies can work much better in combination than as separate organizations for this reason—they can supply power from a common centre to the arc lights and to incandescent lamps, thus cheapening the cost. It is possible, of course in Philadelphia under the Electrical Trust, that some arrangement can be made which will enable the companies here, incandescent and arc, to accomplish the same thing, by a harmonious working together of all the interests in the trust." Capitalists interested in the electric lighting business are anxious to know how and when Mr. Edison will attempt to enforce the patent granted to him, and the present situation is likely to stimulate electricians to invent a new system of distribution which can be adopted in case Edison's suits shall be successful. In any event it looks as though there is to be a good deal of tedious litigation before the matter shall have been disposed of.

At a meeting of the Electrical Committee of Councils, held a few days ago, an ordinance granting permission to the Morse Underground Co. to lay its conduits along Delaware avenue from Walnut to Arch streets, was taken up for consideration. It was explained that the company desired the privilege for the purpose of making a test of the system. It was contended that the company had received similar privileges from councils before but had never taken advantage of them. Mr. A. Ellwood Jones stated that he understood the company was in the hands of speculators. He was not opposed to the company if it was legitimate, but if it was run for speculators the committee should know it. President Mershon, of the company, said that much that had been said by Mr. Jones was true in the past, but things have changed. "The company is in different hands since. I was opposed to the methods of the directors, but I was only one amongst 12, and my counsel was not listened to. I have not sold a share of stock, and as I am interested in my patents, I am anxious to see them succeed, and will be personally responsible." He explained in answer to inquiries from the members of the committee that the capital of the company was $2,500,000. After some further discussion the matter was referred to a subcommittee of five.

The doubts which have recently been thrown upon the permanency of the telephone, telegraph, railroad and other concessions made by the Chinese government to an American syndicate, represented by Barker & Bro's. of this city, have apparently been strengthened by the receipt of the following despatch from London, through the Associated Press:

> The *Standard's* Shanghai correspondent gives further particulars regarding the American banking syndicate. Mitkiewicz, while trying to obtain the concession, used the name of Mr. Vanderbilt, which was mentioned in the agreement signed by Li Hung Chang. Mr. Vanderbilt was warned, but not in time to prevent the use of his name. Then Mitkiewicz mentioned the names of Messrs. Gould and Mackay. On Mr. Gould's son denying his father's connection with the syndicate, Mitkiewicz engaged the Barker Bros., of London, who, after consulting a large banking firm of London, pronounced the scheme untenable. It transpires, moreover, that whatever railways and other works should be undertaken with money raised in America were to be mortgaged to the syndicate.

This was shown to Mr. Wharton Barker, and after reflection, Mr. Barker said: "This is pure fabrication. I have it directly from the Chinese envoy, who was present at all of the conferences with the Viceroy, that the name of no firm was mentioned except that of our own, and that the whole story as telegraphed from London is false." Mr. Barker added: "All of the details have been arranged, and I propose to go to China in two months. These stories are absurd. I have assurance, from the Chinese minister that our concessions are all right, and we have no difficulty."

The following letter explains itself:—

Philadelphia, Sept. 28th, 1887.

To Wm. B. Gill, Esq., Superintendent Western Union Telegraph Co.

My Dear Sir: Before closing the work assigned me in connection with the civic and industrial demonstration of the 15th inst., I avail myself of the opportunity to return to you, and through you to the company you represent, an expression of my high appreciation of your generous and cordial support in connection with the work committed to me.

The public spirit that granted the free use of your wires and, in addition, the services of 16 operators, with messengers, along the improvised line of telegraph erected along Broad street, is worthy commendation of the public, as it certainly has received the appreciation of all those who understood the generous action that gave these facilities without any cost to the commission.

I beg leave to convey to your company, on behalf of the commission as well as on my own behalf, an expression of my cordial appreciation of the liberal and hearty support given to the branch of the work assigned me. If anything could add to the liberality of your action, it was the kindly spirit in which it was tendered. I am very truly yours,

A. LOUDON SNOWDEN,
Chairman Committee and Marshal Civic and Industrial Display.

Counsel for the Bell Telephone company obtained a restraining order on the third of the present month from Judges McKennan and Butler, prohibiting the Electrical Supply and Telephone Co. of this city, from selling the "Long telephone," which is said to be an infringement of the Bell patents, until the question can be

Digitized by Google

heard on a motion for a preliminary injunction. Similar action has been brought in the courts of West Virginia, Maryland, Texas and New Jersey,

The city council of Cape May, N. J., has passed an ordinance to its second reading authorizing an electric railway company to lay its tracks on certain streets and avenues. The new road will connect the Gentleman's Driving Park with Ocean Pier.

PHILADELPHIA, Oct. 19th, 1887.

BOSTON.

The Gamewell Police-Signal Boxes.—Privilege to run Electric Cars granted to the Cambridge Railroad Co.—The new Electric Car of the West End Street Railway Co successfully tried.—Electric Lighting Notes.—The Consolidated Electric Light Co. of Portland, Me.—Output of The American Bell Telephone Co.—The Erie Telephone Co.'s reports.—House Warming of the Boston Electric Club in its new rooms.

THE Gamewell police signal system, referred to last month, has excited considerable attention from the public in more ways than one. An opinion has gained some credence, to the effect that the small octagonal structures were for the purpose of confining an intractable prisoner within, pending the arrival of the police wagon. The committee of the board of aldermen on electric wires have received many complaints on account of the location of the Gamewell police-signal boxes in various sections of the city, and will soon give a hearing to the complainants and to the police commissioners on this subject. An impression prevails, that the boxes occupy too much space on the sidewalks, and that they are unsightly. The agent of the company says they are in use in nearly 30 of the largest cities in the country, over 500 being in use in Chicago; in Pittsburg the citizens are making requests to the authorities to place the sentry boxes on their sidewalks. The boxes now being erected in Boston are similar to those in use in Brooklyn, Chicago, Cincinnati, and other places. The system, it is expected, will be in working order in about a month, and not until that time can the citizens of Boston have practical proof of their efficiency.

At a meeting of the board of aldermen on the 27th ult., Mr. Prentiss Cummings, president of the Cambridge Railroad Co., presented a petition for leave to run one or more cars between Cambridge and Boston by means of electricity and storage batteries; stating that it appears that such motive power can be used successfully to operate its road, and that leave so to do had been granted by the city of Cambridge.

The following order was passed:

Ordered, That the Cambridge Railroad Co. be authorized, until otherwise ordered by this board, to use electricity in propelling one or more of its cars within the limits of the city of Boston, provided that such use shall be by means of storage batteries. Considerable interest is felt in the new electric car which has been on trial on the Fourth and Madison avenue tracks in New York recently, and intended for use in Boston. On its sides are the words "West End Street Railway Co." It is of the ordinary size, neatly finished, and only differing from our street cars in its higher elevation from the street. It is furnished with Sprague motors, and the Julien storage batteries, placed under the seats. It is fitted with a centre four-light electric chandelier, besides the customary end lights. There is an electric signal bell for the conductor's use in stopping and starting, an electric alarm bell to take the place of the bells ordinarily used on the horses to give notice of the car's approach. Mr. H. M. Whitney, the president of the West End Street Railway Co., was present, and witnessed the trials in New York, and ordered the car to be sent to Boston, being satisfied that improvements which are sure to be suggested will sooner be perfected by practical tests on our streets than by short experimental trials. The car has run as high as 10 miles an hour, and is capable of being run 40 miles with one changing of its storage cells. The car arrived Oct. 4th; and very successful trial trips have been made.

It may interest electric light people to know how the case of Matthew Burns *vs.* Newton Electric Light & Power Co., a bill in equity to restrain a nuisance, mentioned in last month's letter came out. The judge visited the premises to find out the extent of the noise and other disturbance complained of, and in his decision stated that he thought as matter of law an injunction might be granted, but from the circumstances and nature of the defendant's business, he did not deem it advisable. The noise and tremor, he stated, were of too slight a nature to be the subject of restraint, but the exhaust pipe, as it existed at the time of the bringing of the bill, was clearly a nuisance. As the defendants had, however, changed its position, and it had ceased to disturb the plaintiff, he did not think it necessary, formally, to issue an injunction against it. The bill was dismissed without prejudice, and plaintiff's costs were taxed to the defendant.

Lewiston, Maine, is to have its streets lighted by electricity instead of gas. At the meeting of the board of aldermen and common council on the 29th ult., bids from 10 different electric light companies were considered, and resulted in the contract being awarded to the American Electric Manufacturing Co. of New York. Great care has been exercised by Mayor McGillicuddy and the committee in investigating the merits of the various systems, which resulted in the choice of the American, as being in every way satisfactory. Mr. Samuel Elder, the agent of the American company, was present, and closed the contract. One hundred arc lights of 2,000 c. p. each are to be placed on the streets immediately. It is thought this number will be doubled within the coming year.

The Ware Electric Light Co. has filed papers for incorporation in the office of the secretary of state. The president is H. C. Davis, and the treasurer H. M. Clark. Capital $15,000.

The annual meeting of the stockholders in the Consolidated Electric Light Co. of Portland, Me., was held at the company's office in that city Sept. 21st. The annual report shows the business to be in a flourishing condition with a growth that must be gratifying to the stockholders. The company's property is located in the heart of the city, and including the new block just completed, covers about 16,000 square feet of land. The arc light apparatus was put in by the American company, who own a controlling interest in the plant, and the incandescent apparatus is from the Edison company. The company light the entire city of Portland, and it is claimed that it is the best lighted city in America. It is understood that its capacity for arc and incandescent lights is soon to be largely increased and extended. Up to the present time the American company of New York has been pretty much the sole owners, but there are indications that a combination has been formed between the American company and what is known as the New Haven syndicate. This syndicate is composed of bankers and capitalists of New Haven, Conn., who it is said have capital invested in electric lighting plants in different parts of the country, amounting to several millions of dollars. Its operations, so far as we can learn, in New England cover the electric lighting business in Boston, New Haven, Springfield, Bridgeport, Newport and Waterbury, besides several smaller cities. The syndicate is under the management of Messrs. F. A. Gilbert, president of the Boston Consolidated company; James English, treasurer of the New Haven, Bridgeport and Newport companies, and H. P. Frost, general manager of the Southern New England Telephone Co. These gentlemen were elected on the board of directors of the Consolidated company. If this means combination with the American company it will help to strengthen the general business of electric lighting wonderfully, from the fact that the American company are about to move their entire factories to New Haven and double their facilities. It looks as though a combination had been made upon a large scale. The board of directors elected to-day is as follows: Weston F. Milliken, William R. Wood, Frank J. Robbins, Chas. R. Milliken, Frank A. Sawyer, Portland; F. A. Gilbert, James English, H. P. Frost, New Haven, Conn.; Silas Gurney, Boston; E. H. Goff, New York.

The gas commissioners have issued an order authorizing the Brookline Gaslight Co. to furnish electricity for lighting purposes and power in Brighton wherever the company has authority to furnish gas, and in Brookline, and also in so much of Boston as was formerly in the town of Brookline. It requires that the company shall construct and equip within six months from date, a plant with a minimum capacity of 180 arc lamps of nominally 1,200 c. p.; 100 arc lamps of nominally 2,000 c. p., and 300 incandescent lamps of nominally 16 c. p.

One by one, as the leaves fall, the early telephone promoters disappear from the telephone arena, and merge themselves with common clay. The last one of the much advertised Lowell syndicate to assume a new *role*, is Mr. Charles J. Glidden, who has resigned the treasurership of the Erie Telephone Co., and will become a member of the banking and brokerage house of Cordley, Young & Fuller.

The output of telephones by the American Bell company for the month ended Sept. 20th, and the fiscal year to date, is given as follows:

September—	1887.	1886.	Increase.
Gross output	4,110	3,800	310
Instruments returned	2,152	1,261	*891
Net output	1,958	2,539	581
Dec. 21 to Sep. 20—			
Gross output	40,651	31,761	8,890
Instruments returned	19,815	14,668	*5,147
Net output	20,836	17,093	2,743

* Decrease.

The Erie Telephone Co. reports earnings for August and the first five months of the current fiscal year as follows:

August—	1887.	1886.	Increase.
Gross earnings	$52,135.72	$43,937.29	$8,199.43
Gross expenses	35,142.79	28,841.70	6,301.09
Net earnings	$16,993.93	$15,095.59	$1,898.34
Construction	5,029.74	3,179.85	1,849.89
Surplus	$11,964.19	$11,915.74	$48.45
April 1 to August 31—			
Gross earnings	$248,127.31	$218,278.07	$29,849.24
Gross expenses	166,663.15	145,232.61	21,373.54
Net earnings	$81,521.16	$73,045.46	$8,475.70
Construction	17,157.16	11,070.39	6,086.77
Surplus	$64,364.00	$61,975.07	$2,388.93
Number of subscribers.			
Added in August	87	96	*9
Added five months	372	223	149
Connected Sept. 1	10,094	9,147	947

* Decrease.

Digitized by Google

The assessment of railroad, telegraph and telephone lines of the state for 1887 has been completed by the New Hampshire board of equalization. It was determined that the taxable property of the state for the present year has been reduced for taxation 15 per cent. less than its actual value, and the valuation of railroads, telegraphs and telephones was reduced in like proportion, deducting the amounts taxed and paid to towns. The amount thus obtained is assessed at an average of other property throughout the state, to wit, $1.38 upon each $100 of valuation.

The house warming of the Boston Electric Club, held on the evening of the 5th inst, at the spacious rooms of that body, No. 66 Boylston street, proved a highly enjoyable as well as a noteworthy occasion. It drew together about 200 members and their friends, and while celebrating the formal opening of the club with a night of pleasant intercourse and social relaxation, illustrated the remarkable vitality of a society which, though only formed in June of the present year, has already the prestige of growing numbers and assured success. The house committee of the club had scattered their invitations far and wide, and such was the response given that at 8 o'clock the rooms were thronged with guests. When the guests had all gathered in the reception room, President Ridlon took the chair for the transaction of preliminary business. Having first extended a hearty welcome to those present, he introduced Mr. P. H. Alexander as toastmaster for the evening, and then called upon the secretary. Mr. Allan V. Garratt announced that it was his unpleasant duty to communicate the resignation of Mr. W. J. Hammer, one of the vice-presidents. The secretary read a letter from Mr. Hammer, who explained that he was about to remove from Boston, regretted the step he was forced to take, and expressed his confidence in the future prosperity of the club. A committee of three, with Col. C. M. Ransom as its chairman, subsequently brought in a resolution on the subject. They accepted the resignation with regret, and, in doing so, expressed the high admiration felt by the members of the club for Mr. Hammer as a gentleman and as an authority on electric matters. The resolution gave expression to these feelings, and was adopted by acclamation. Supper was served about half-past nine o'clock, and then Mr. P. H. Alexander, chairman of the house committee, called the company to order and speeches were made by several members and guests, as follows: "The Boston Electric Club," Colonel C. S. Ransom; "The New York Electric Club," Mr. Callender; "The National Electric Light Association," Frank Ridlon; "The Boston Press Club," Irving S. Meredith; "The Electric Telegraph," Mr. Suel Smith: "The Telephone," A. H. Chapman; "The Electric Light," Professor Thomson; "The Electric Motor," W. J. Hammer and Lieutenant Green; "Storage Batteries," Morgan Brooks. An amusing incident occurred early in the evening. The electric light suddenly went out and for a while one kerosene lamp furnished all the light there was. But with such a host of experts it did not take long to remedy the difficulty.

BOSTON, Oct. 16th, 1887.

CHICAGO.

Difficulties in the Gas Trust.—Prof. Barrett's Estimates on Lighting the Business Portion of the City by Electricity.—A New Move of the City Council to Mulct the Telephone Company.—Sentence of the Central Union Telephone Company's Book-keeper for Forgery.—The Chicago Electric Club Installed in its New Rooms; Its Current Proceedings.—Mr. W. J. Armstrong leaves the Chicago Office of the Western Electric Company and becomes the Representative of the "Western Electrician" in New York.—Resignation of Mr. W. A. Leary, general manager Iowa Union Telephone Company.—Marriage of Mr. J. J. S. Wilson, Jr.—The Contract for Electric Light Plant for the Union Depot awarded to the Thomson-Houston Company; the Yard Contract not yet awarded.—The Western Electric Company's Electric Light Business.—A Telephone Employe Killed by an Electric Light Current at New Orleans.—The Bell Telephone Company of Missouri; Mr. Durant advocates the use of Col. Flads' Tower System of Overhead Wires in St. Louis.—Electric Lighting in St. Louis.—The American Bell Telephone Company prosecuting Western Infringers.—Pan-Electric attacked in Little Rock, the Home of Attorney-General Garland.—The Texas Promoters of a Rival Telephone Company in Chicago go Home.

OF most interest in municipal affairs is the attack led by alderman Manierre on the gas trust. The franchise under which the Consumers' Gas Co. has been operating has been revoked because it is claimed the conditions under which the franchise was granted have been violated.

These conditions were that the company should not sell its plant to, or combine in any way with any other company. As is well known the gas trust includes the Consumers' company, and besides this three other gas companies which have separate franchises in Chicago, and as two of these franchises are in the shape of special charter from the state legislature, over which the city council of Chicago will hardly claim jurisdiction, there seems to be strength in the position of the gas trust. The agitation over this question, and the advance in the price of gas from $1.00 to $1.25 per thousand feet, leads inevitably to the discussion of the advantages of public lighting by electricity.

Prof. Barrett is ready with figures which convince those who give the matter attention, that it is only a question of time when gas will be displaced by electricity as a means of lighting our streets.

For the territory bounded by the river, the lake and 12th street, which comprises the principal business portion of the city, a careful estimate shows that the entire plant, including engines, boilers, electric light apparatus and underground circuits would cost not much more than $100,000. The cost of operating would be about $12,000 annually, and as the expense of lighting this district with gas is now $28,000 per year, there is a saving of $16,000 per year as interest on the investment, and a vastly superior illumination.

The city council recently passed an ordinance which provides that the Department of Public Works be instructed not to grant the Chicago Telephone Co. any permits for tearing up the streets to lay cables without first producing a receipt signed by the city collector for the payment of $10 for every telephone in use.

It will be remembered that an ordinance taxing the telephone company $25 per year, on every telephone, was authoritatively declared illegal and invalid only a few weeks ago. That the city council has not given up the hope of being able to mulct the telephone company is shown by this latest move. The new ordinance has not yet received the approval of the mayor, but has been referred to the City Law Department.

Wittman, the book-keeper of the Central Union Telephone Company, who stole $18,000 by means of forged checks, has received a sentence of four years in the penitentiary. It is probable that his sentence would have been more severe had he not made a full confession and assisted the officers of the company in ascertaining the extent of his stealings. It is said that his work was so cleverly executed that it is doubtful whether he could have been convicted had he not confessed. The telephone company recovers from the bank more than one-third of the amount stolen.

The Chicago Electric Club has taken possession of its new quarters The rooms are commodious, and for the tasteful manner in which they are furnished much credit is due to the committee which has had the matter in charge, Messrs. Buckley, Shaw and W. A. Stiles. At the last meeting of the club, which occurred on the evening of October 17th, Mr. E. P. Warner read a paper on "Automatic Current Regulation." At the next meeting Mr. Sunny will read a paper on the relations of electric light and telephone circuits.

Mr. W. J. Armstrong has accepted the position of eastern representative of the *Western Electrician*, and has severed his connection with the Western Electric Company with which he has been identified for nearly eight years.

Mr. W. A. Leary, who has been engaged in telephone business for the last six years as general manager of the Iowa Union Telephone Co., has resigned. Mr. A. F. Cutter, the secretary of the company, takes up the duties dropped by Mr. Leary.

Mr. J. J. S. Wilson, Jr., the auditor of the Central Union Telephone Co., was married recently in Bloomington, Ills., to the daughter of Dr. J. L. White, of that city.

The contract for the electric light plant for the Union Depot has been awarded to the Thomson-Houston Electric Co. The contract for the plant for yard lighting has not yet been awarded.

The Western Electric Co. has secured a contract for a 60-arc light plant for Independence, Mo., and one for a 30-arc light plant for Keyport, N. J. This company is also doing a good business in furnishing dynamos and lamps for plants already in operation, having orders on hand now for more than 200 lamps with the necessary dynamo capacity for this purpose.

The death of Henry Boscher, an employé of the Great Southern Telephone and Telegraph Co. in New Orleans, is announced as having been caused by the current from a Westinghouse alternating dynamo.

Mr. Geo. F. Durant, says the Bell Telephone Co., of Mo., has had a prosperous year. The number of subscribers in the St. Louis exchange has increased this year nearly 500. Mr. Durant is still advocating the Flad system with good prospects of having at least a part of the city provided at an early day with this ingenious and carefully planned arrangement for suspending wires and cables. One would think that St. Louis, with five electric lighting companies competing for business, would have plenty of light at low prices. But lights are no cheaper there than they are in Chicago, where the business is all in the hands of one company, and where the circuits have to be run underground: and the St. Louis city authorities have not made as much headway as those of Chicago toward introducing electric light for street lighting.

A restraining order was issued by Judge Thayer, of the United States District Court at St. Louis, directed against Messrs. Rose and Rein, "The Franklin Electrical Works," who have been doing

Digitized by Google

quite an extensive business with their small factory in the manufacture of infringing telephones.

At Little Rock, Ark., suit has been brought by the Bell company against the Southern Telephone company, users of the Pan-Electric telephone. This suit will be watched with interest, because it is brought in the state which is the home of Attorney-General Garland, and because it is based on the Edison patents.

The gentlemen who spent some months in Chicago trying to organize a company to rival the American Bell Telephone Co., have gone back to Houston, Texas.

CHICAGO, Oct. 22d, 1887.

LETTERS TO THE EDITOR.

Notice to Correspondents.

We do not hold ourselves responsible for the opinions of our correspondents.
Anonymous communications cannot be noticed.
The Editor respectfully requests that all communications may be drawn up as briefly and as much to the point as possible.
In order to facilitate reference, correspondents, when referring to any letter previously inserted will oblige by mentioning the serial number of such letter, and of the page on which it appears.
Sketches and drawings for illustrations should be on separate pieces of paper.
All communications should be addressed EDITOR OF THE ELECTRICIAN AND ELECTRICAL ENGINEER, *115 Nassau Street, New York city.*

THE REIS TELEPHONE.

[78.]—I have read with much interest in your issues of July and October, the open letters between Dr. Stein, of Frankfort, a. M., and Prof. E. J. Houston, of Philadelphia, concerning the telephone controversy; and, if you will allow space in your valuable paper, will show, I think, that each is in a measure right and also wrong, in the stand he has taken, with the preponderance of right on the part of Dr. Stein.

The controversy is based upon the question—"Can the original Reis telephone transmit intelligible articulate speech?" Dr. Stein implies that it cannot, and that the art of transmitting speech became known only through the discovery of the undulatory or wave theory; that after having been advised of the true method, it is an easy matter for one to so adjust or use the Reis transmitting apparatus with a Bell receiver as to practice the undulatory method.

No one, so far as I am aware, has ever been able to transmit intelligible speech between two distant points with the Reis apparatus as a whole; at least we have no such conclusive proofs of such performance as would be accepted in a court of equity in this country.

If the apparatus taken as we find it, or as Reis left it, with his instructions for using it, is not capable of practicing Prof. Bell's method, then, in the language of our patent law, which must govern here, Reis is not the first inventor of the method, nor any part of such method, nor can his apparatus stand against Prof. Bell's claim.

The trouble with Prof. Houston's argument lies in his assuming a part of that which takes place in the transmission of speech to be the whole, viz.: he assumes that if the transmitting apparatus as Reis made it can be used with any improved receiving apparatus which will repeat the speech to the hearer, then Reis must have been the inventor of the art of transmitting articulate speech electrically.

The method so practiced falls short of all that actually takes place between the speaker and the hearer, in that it only sets up electrical waves or impulses, similar to the sound waves, and it ends there. But, it may be said, that is all that the famous Bell method in the 5th claim of U. S. Patent No. 174,465 covers.

I admit that this is true, and just here permit me to disclose a line of defense against this claim, which none of the learned lawyers seem to have noticed in the many cases heretofore tried, viz: that the claim is not to a method, but to a single step in a method, which is only complete when the whole series of steps or acts have been followed.

A correct and complete method claim would, in my opinion, be substantially as follows:

"The method of transmitting vocal and other sounds telephonically, which consists in creating electrical waves similar in form to the sound waves accompanying such vocal and other sounds, and then converting such electrical waves into secondary sound waves, identical in form with the primary sound waves, substantially as described."

The courts in this country have defined a patentable method to consist in a step or series of steps, an act or series of acts to be performed, whereby the result sought is attained. They have also held that a combination of elements to be patentable must co-act as a whole to perform a single or unitary result. A claim to a method is under our law, a claim to an art or improvement in an art of doing something and it is as essential to the clearness and the completeness of such a claim that all of the steps or acts be enumerated, as it is that all of the parts of a mechanism which go to make a combination claim should be named; see the decision of Hoffman *vs.* Young, 18 Official Gazette U. S. Patent Office.

I am willing to concede that the Reis transmitting apparatus may be, and doubtless has been, used to produce the first step of the method embraced in the claim which I have drawn above. So far then Prof. Houston is correct. But that it was so intended to be used is not apparent, in fact the weight of proof is to the contrary.

Under our law, it matters not that an old device can be put to a new use, after some one else has disclosed such new use in the nature of a new art which was unknown to the prior inventor. Such an apparatus cannot stand in the way of a meritorious inventor who opens up a new field, and in this our law has been shown to be abundantly wise.

I am satisfied from experiments which I have made, that Dr. Stein is wrong in asserting that speech cannot be transmitted by current impulses, in fact, the use of the Reis transmitter with hard metallic contacts, is in my opinion, a proof of his error. Do not understand me, however, as disapproving Prof. Bell's undulatory theory, for I am convinced he is correct in that view, but wrong in his impression that it is impossible to transmit speech by current impulses.

In a future article I will take this problem up, and discuss it with diagrams showing the conclusions I have reached.

C. J. KINTER,
Late Principal Examiner of the Class of Electricity, U. S. Patent Office

DISTRIBUTION BY TRANSFORMERS.

[79.]—While the subject of the invention of the system of distribution by transformers is under discussion, and while there appears to be a good many claimants for the honors due to those who have really made substantial advances in the art, I may be allowed to give here a few of the leading dates of what appears to me to be the most important advances made:

1835.—Faraday invented the induction coil open and closed magnetic circuit.

1856.—Cromwell Fleetwood Varley perfected the closed magnetic circuit transformer, making the iron enclose the conductors, and thoroughly laminating the iron, patent No. 3,059.

1857.—C. W. Harrison proposed to use induction coils; in a patent granted to him he proposes to use a primary circuit to supply the coils, and to work lamps from the secondary circuit.

1877.—M. P. Jablochkoff patented the use of induction coils, in a primary circuit containing the coils in series order, and working lamps from the secondary circuit.

1883.—Mr. Rankin Kennedy, of Glasgow, in the *Electrical Review* of London, pointed out the cause of the failures with coils in series order, and stated that, if placed in parallel order, they become self-regulating.

1885.—Messrs. Zipernowski & Deri patented the use of coils in parallel order.

These dates have been mentioned by Kennedy in his pamphlet, and others, as the leading ones, and, if correct, would seem to support his view that no "master patent" exists on the subject.

Yours truly,
ROBERT MITCHELL,
115 South Woodside Road,
GLASGOW, October 6, 1887. Kelvinbridge.

THE GUTMANN TRANSFORMERS—A CORRECTION.

[80.]—I find on reading my article on "Subdivided Transformers" in your October number, that it contains a printer's error. On page 414, instead of "Figs. 5 and 5*a*, top views of some spirals or layers," and "Fig. 5*b*, a side view of the two last spirals," read "Figs. 5 and 5*b*, top views of some spirals or layers," and "Fig. 5*a*, a side view of the two last spirals." Also, instead of "Fig. 5*a* shows a new form of an iron core," etc., etc., read "Fig. 5*b* shows a new form of an iron core," etc., etc.

Kindly insert this correction in your next issue, and oblige

Yours faithfully,
NEW YORK, October 11, 1887. L. GUTMANN.

PACIFIC COAST TELEGRAPH NOTES.

[81.]—Matters telegraphic are decidedly on the boom in San Francisco, and preparations are being made on every hand for the increased business that is looked for, and improved facilities required for the traffic that is now crowding every wire.

Colonel Clowry, with his staff, Messrs. Bristol and Summers, are "doing" the coast in their special car, and laying out the programme for additional wires. The operating force in the Western Union office now numbers about 45 persons, and it is rumored that John McRobie, of Chicago, will shortly appear on the scene as manager of the San Francisco office.

The Postal company are said to be doing a good business to all points covered by their lines, but have left the cream of the territory on the west coast (Southern California) to the old company, notwithstanding the inducements that this field offers to an opposition company.

Mr. B. S. Robeson, who came to California a few months ago

Digitized by Google

for the purpose of getting the Postal under headway, has fulfilled his mission, and will soon return to Chicago. He made many warm friends while here, and his energetic management won the admiration of all with whom he came in contact. It was something new here to have a "live" man in the field, and the Postal has a reputation for good service that is very flattering to his administration. He carries with him as a memento of his sojourn a handsome watch presented by the employés of the Postal company. Mr. Robeson's successor is Mr. M. C. Laven, who has been manager of the Postal office here since the opening of the line.

Mr. E. A. Beardslee has resigned from the management of the Postal office at Sacramento, to take charge of the Western Union office at Los Angeles, vice Mr. R. R. Haines, resigned. It will be gratifying to the many friends of "Commodore" Haines to know that the real estate boom struck him, and that the telegraph service will know him no more.

I. N. SULATOR.

San Francisco, Oct. 1st., 1887.

ELECTRICAL NEWS AND NOTES.

AMERICAN INSTITUTE OF ELECTRICAL ENGINEERS.

MEETING OF OCT. 11, 1887.

THE meeting was called to order at 8 P.M. in the rooms of the American Society of Civil Engineers, 127 E. 23d street, New York, by the president of the institute, Mr. T. Commerford Martin, who introduced Prof. George Forbes, of London, in the following remarks:

The President: I need hardly say, gentlemen, that we all of us have great pleasure in welcoming here this evening so distinguished a scientist and so well known an electrician as Prof. Forbes of England. Some of us have already had the pleasure of listening to Prof. Forbes in this country, and remember the occasion of his visit here in 1884 at the time of the National Conference of Electricians and the International Electrical Exhibition in Philadelphia. Prof. Forbes is also known to us through his work in England, and as the author of a number of highly ingenious inventions, and I think by the close of the evening you will all agree with me that none of his inventions, evinces greater ingenuity or firmer grasp of electrical principles than the apparatus which he brings before us this evening. This instrument is one for which there has been a decided want, and it brings before us questions of the utmost importance and pre-eminence at the present time. I have no doubt that both the paper and the discussion upon which we shall enter this evening will do much to start us far along a new road of original investigation. Nothing for me remains, therefore, but to introduce to you Prof. Forbes, who will now read to you his paper on the Coulomb meter.

(Prof. Forbes then read his paper, see p 428.) Upon concluding the reading of the paper, Prof. Forbes proceeded to exhibit the operation of the meter before the meeting, and made further descriptive and illustrative remarks, as follows :—

I would like to show you one or two points about the instrument. In this instrument there is one part which I have not described to you. Perhaps before I describe it I ought to let you see it working. I will put on some battery current, and we will just make it go round and see what happens (turning on the current). I am starting it with a current of 11 amperes.

A Member—When you cut off the current how soon does the meter stop?

Prof. Forbes—It takes a little time to get up its full speed and a little time to lose its full speed. I have shown this lighter form of wheel work and I am making it even lighter than this in the instrument which is being manufactured now. This instrument has a good deal of metal work—much more than in any of the instruments which I have been using before, and the mass of metal absorbs so much heat that it goes on for a considerable time after the current is broken. Now this might suit the suppliers of electricity very well, but it would not, of course, suit the consumers, and one must defer to both sides. I do not want the meter to act in that way and I find that by reducing the metal work as much as possible that difficulty is taken away. There is another point about this instrument which I have not shown you or spoken to you about. It is an arrangement which is attached to it for lifting up the mica vanes (the mill-wheel) against a fixed stop above. I have moved the stop away, you see, at present. That lifts the mill-wheel up against the stop and enables us to carry the meter about with safety.

I must make one reservation; there is fear of danger if it passes through the New York Custom House. (Laughter.)

I brought in a lot of instruments, and after I saw a little of what the Custom House people were doing it sickened my heart so much that I let them lock the instruments up and put them in the public stores. I had worked six hours that morning like a slave doing their bidding; and by the time they came to my parcels I am sorry to say that many of the things were in a sad state. You will notice something hanging to that (exhibiting some ruins); that was an extremely delicate spiral spring which was attached to one of these mill-wheels, acting simply as an ampere metre, not acting for registering the consumption, but measuring the rate at which the current is passing through the conductor. That instrument is quite disabled and others too.

I have also some diagrams here. Here are actual examples of some of the readings of these ampere metres, and I have sometimes taken them under different conditions. I have, for example, got results from the instrument with the clock work in, and without the clock work, showing the amount of friction; and I may tell you this, that it looks as if the wheel work there would cause a considerable amount of friction which has to be got over. That friction is a mere nothing compared with the friction of the air which is circulating in these convection currents which are created. There are three frictions coming in—first, there is the air friction in the currents of air, which is the chief source of friction; secondly, there is the friction of the jeweled cup on the point, and lastly, there is the friction of the wheel work which is far less than the friction of the jeweled cup upon the point. That is what one of these diagrams shows (exhibiting a series of diagrams with curves of the ratio of speed to current varying but little in tests of the instrument in different states). Another one happens to show the effect when the apparatus for fixing the mill-wheel is taken out. Another one may be of some interest to you. It was from this instrument when it was an experimental instrument, I varied the distance of the vanes from the conductors, and I used it at $\frac{1}{16}$, $\frac{3}{16}$, $\frac{5}{16}$ and $\frac{7}{16}$th of an inch. You might expect that the nearer it was to the conductor the greater the velocity would be with a given current. That is not so. It then creates friction by pulling the air from the surface of the wire when it is too near. $\frac{3}{16}$th of an inch was found to be the most suitable distance.

There is a peculiarity of this instrument which I believe no other metre possesses, and that is I have not only my own tests of it, but I have got some independent tests. I have never been able to get any independent tests of any metre in the world; but I left word before leaving England a fortnight ago, to have one of these metres finished and sent to Sir William Thomson, who was kind enough to say that he would test the instrument. The sister metre to this one was sent. This metre has an adjustment to it—which no manufactured article ought to have and no manufactured metre will have—but this being in the experimental stage it had an adjustment which regulates the depth at which the first wheel works into the principal pinion. Now it appears that a screw had become loosened in transit when Sir William got it, and it was not found out until after the experiments were made. But the tests are being repeated. I have received the test made under the conditions of that instrument, which I will write down on the board. He applied different currents and he got the ratio of current to speed at these different velocities. He did not try to see what was the feeblest current he could start with. He began with one ampere, and the ratio of current to speed was 66.5; with 1.5 amperes the ratio was 45.5. I will leave out the decimal place if you please. He then used two amperes and the ratio of current to speed was 44. He then used three amperes, and the ratio was 39. He then used five amperes and the ratio was 39. He then used ten amperes and the ratio was 42½. He then used 52 amperes and the ratio was 42. Although I look at that as very bad indeed I think you will agree with me that that gives you a very good result under the defective condition of the instrument. I would have been very well satisfied with that six or eight months ago; but I confess I am not satisfied with it at present, when we are able to get so much more accurate results; however, I thought it would be worth while to give you these results of Sir William Thomson's. After the instrument had been going (it was one of these instruments with a large mass of metal in it) Sir William Thomson found what I have spoken to you about, that putting on the lower currents, after it had been running for a long time with 15 amperes, it was too favorable to the supplier of electricity and not favorable enough to the consumer. After that he put it on to 10 amperes, and he got only 37 as the ratio of speed to current instead of 42½ as it was originally.

I think that is all I have to say about the meter. I have no doubt that in the progress of discussion there may be points of interest raised which may give me an opportunity of saying something more about it, but I think I have really touched upon all the chief points of interest connected with it. (Applause.)

Prof. Forbes then turned a current through the instrument, and a recess of ten minutes was taken to enable those present to examine it. When the session was resumed, the president said:—

As we have now had an opportunity to examine the instrument the discussion will be in order, and the better ventilation the subject has the more profitable will be the evening. We have with us this evening some few gentlemen who are not members of the institute, and I beg to assure them that any question they may desire to ask and any information that they can afford us will be heartily welcomed.

Digitized by Google

DISCUSSION.

Doctor P. H. Van der Weyde—Is it the intention to have that apparatus under that glass shade while in operation continuously?

Prof. Forbes—At the present moment I intend to use that glass shade although I have no great preference for it. If any one has any objection to it a metal one is just as good, only one would need a glass window to read it by.

Dr. Van der Weyde—The objection would be that when the apparatus is in operation a little while the air will be heated, and the ascensive force would diminish and become very small at last when the air was considerably heated in the glass shade. To correct that nothing would be easier than to make an opening in the top of the glass shade to let the hot air out and keep the surrounding atmosphere more uniform. The apparatus would give an indication of less velocity if the air is made warm than if it is cooler. When the apparatus has been in operation for some time so that the air which surrounds it becomes heated, the indications would become a great deal less. I wish to do justice to Prof. Forbes for the ingenuity of the apparatus, and the remark I make is only for the purpose of suggesting something which may make the apparatus more perfect.

Prof. Forbes—These are very suggestive remarks that come from Dr. Van der Weyde, and, of course, the point occurred to me during the progress of the experiments. There is one lesson that I have learned from this instrument, which is that you cannot calculate on what is going to happen with a convection current. I have been as sure as possible, over and over again, when I was making a minute change in the instrument, that I knew as well as possible what it was going to do—and it never did it. Dr. Van der Weyde suggests that when the air at the top of the shade gets heated the instrument will be slower. The only answer I can give to it is that it does not do so in fact. It goes perfectly continuously however many hours I have it at work. He suggests that a hole should be made at the top to keep it cool. Nothing in the world will ever induce me to let a hole get into that mechanism any more than I would let the works of my watch be exposed to the open air to get dust into them. But it is quite unnecessary, for it goes any number of hours at a perfectly constant rate even when the top gets hot. It is remarkable that the first person who has spoken at this discussion has raised the first objection which every person who has ever spoken to me about it has raised, and that is that its indications will depend upon the external temperature: that when the external temperature is high it will go slower. This is the only one thing, however, in which practice does agree with theory in regard to convection currents. The theory of the thing is perfectly simple. The moving force is the difference of temperature between the conductor and the external air. It does not depend in the least on the absolute temperature of the place; it is only on the heat that is being generated in the conductor, and it is the difference of temperature created there from that of the external air which gives you the moving force. It is a matter of indifference whether you start with a temperature of 30 or 100. As a matter of fact the indications in a warm atmosphere and a cold atmosphere are identical. I may forestall the question that is going to be asked immediately—whether the barometer has any effect. I may say that I have not had the instrument under an air pump to test it, but I have tested it day after day and I have seen no perceptible variation,

Dr. Van der Weyde—No person of any information would talk about a barometer in connection with it; but what becomes of the heat which is continually generated?

Prof. Forbes—It is radiated from the surface of the glass. A great deal collects at the top. A fixed temperature is arrived at, of course, and afterwards the heat which is being created is all radiated from the surface of the glass.

Dr. Van der Weyde—It must be confessed, however, that heat is generated continually. Now if experience proves that that does not affect the instrument, that is all right; that settles the matter: but the suggestion is very natural, because we all know that the ascending force of air depends upon the difference of temperature between the air which is passing under the vanes and the air at the sides, and that the heat accumulated in the top must gradually descend and cause an influence I cannot help believing.

Prof. Forbes—You are able to test it when you are passing a high current through it; you are able to test it by holding the hand on it.

Dr. Van der Weyde—Putting the hand on it is not a good test. We have thermometers which can determine it correctly, and I cannot see why a small hole in the top would do harm. Prof. Forbes said he would as soon expose the works of his watch to the air as to have a hole in the top of that shade. But I would like to be informed what injury a small opening in the top would be, to let out the hot air which must come up from below.

Mr. Frank L. Pope—The amount of heat which is generated by the action of the current is not very great at the most, and as it gradually collects in the top of the glass it is probable that before the hot air extends down far enough to affect the operation of the instrument, the radiation has become great enough to carry away an equal amount of heat with that which is being generated, and the temperature, from that on, is stationary, and that the balance is brought about before the currents of air are affected sufficiently to influence the operation of the instrument.

Dr. Van der Weyde—But I suggest that the radiation through glass to the exterior air is very small.

Mr. C. O. Mailloux—There are some points which I would like to bring forward. One point is in respect to the friction of the apparatus. I would like to know whether the calibration of the apparatus does not depend for its constancy on the friction of the apparatus remaining constant as nearly as possible; and it also occurs to me to suggest that the friction of the apparatus may have a great deal to do with its sensitiveness as an integrating instrument. In other words, if there is very little friction, it is quite likely that the inertia would be greater, and its momentum once obtained would tend to carry it over, so that if there were any abrupt changes in the current it would not so readily respond to them. So that if we were to draw a curve of variations of current it would in reality not follow that curve closely but only partially, introducing a quantity in the result which would be the analogue of self-induction with an ordinary apparatus. There is another point. We all know that in order to obtain heat from a conductor we must have a certain amount of resistance, and I would like to know whether the amount of resistance that has to be introduced, in the wire, (which I presume is iron from its appearance) is of material consequence—whether it would figure at all as an element of resistance of the whole circuit, and also whether by virtue of its resistance or of its position it would introduce any such variation as has been called impedence in the circuit in consequence of self-induction or anything like that.

Prof. Forbes—The first question is as to the effect of the constancy of the friction—whether the speed of the instrument depends upon the constancy of the friction of the solid parts, and the second question I had better take in connection with it, which is whether that friction of the solid moving parts renders it less sensitive. First, we have to consider whether after the lapse of months or years, when the mechanical parts of the instrument are not in such good order as when it was started, whether its readings will be as accurate as they were at the beginning; and in the second place will it be so ready to start with a feeble current, with the friction of the wheel work as without it. I have already said that the most important part of the friction in that apparatus is the air friction; but that is especially so in the case of a larger current. When the currents come to the average size, or greater, the air friction is out of all comparison the greatest friction that we have in the instrument. At any time the friction of the steel work, incredible as it seems to most people, at first sight, who are not accustomed to thinking much of the subject—the friction of the wheel work is but a fraction of the friction of the jeweled cup upon the pivot. You must remember that the first wheel of the wheel work is rotated at only one-tenth of the speed of the mill-wheel, and its weight is extremely light compared with the weight of the mill-wheel, and the friction of the first wheel is therefore very slight indeed, and when you come to the second wheel, its speed of rotation is diminished ten-fold, and its lightness is small compared with the mill-wheel. I was told to expect this by a great friend of mine whose name I ought always to mention in connection with this instrument—Mr. Stroh, who assisted Sir Charles Wheatstone in all of his celebrated inventions, and who has assisted me in all this work, and there is no man capable of giving such assistance in the mechanical details of an instrument like this. (Applause.) I had intended to make a German pun, a thing I never did in my life before, and should have done so if it were not for the earnest objections of Mr. Stroh, and call this a Strohmeter. That is the way that the friction of the apparatus comes in. It is very slight indeed compared with the air friction except with very feeble currents indeed. The result then has always been that what I call the ratio of speed to current was constant whether the friction were a little more or a little less, but that it did not start quite so easily with extra friction, and I have no doubt that if the wheel work were to get seriously out of order and we were to have very much more friction, it would not be so sensitive to a single lamp, but at higher speeds there would not be the slightest difference in the indications. For example, to show you how that works I passed around two diagrams, I think, give you the ratio of current to speed when different currents were passing through with the clock work attached and without the clock work attached. You would notice in those that with the clock work attached it did not start with so small a current, but when the instrument was once in working order from one-and-a-half amperes or so, or upwards, the two lines of ratio of speed to current were identical. As to the resistance of the instrument, I am asked whether it would afford a sensible amount compared with the resistance of the lamps. As soon as it does that we must, of course, stop using it. I have never been able to raise this wire to such a temperature that it did not indicate proportionately. I have had my wires red hot, and up to that point it was still indicating proportionately. You must simply stop using

Digitized by Google

it when the resistance here compared with the lamps is something you do not like. There is another question asked which raises a subject that I ought to have spoken more fully of in my opening remarks. Mr. Mailloux has spoken about Mr. Oliver Heavyside's impedence (Mr. Mailloux had pronounced the word *impedence*). I beg Mr. Oliver Heavyside's pardon. He has distinctly asked us not to speak of it in that way but to call it *impedence*. He asks me whether the effects of self-induction are perceptible in the instrument. Now there are two effects of self-induction in a coil like that: one is the effect of induction of one turn of a spiral upon another, and the other is concentration of the current in all parts of the wire, not allowing the current all to pass through the whole section of the wire equally. These are the results of using an interrupted current or any variable current. Both these effects come into play. In this case I have only four turns of the spiral and their mutual influence is, of course, quite insensible. Many of you, I presume, read with interest, equal to my own, the delightful researches of Prof. Hughes, on self-induction a year-and-a-half ago, which he gave to the Society of Telegraph Engineers and Electricians in London. You will there find recognized the fact that a variable current passing through a conductor does not pass equally through the different sections, and it has been more generally recognized since that time than previously, that there was a greater resistance in a given wire to a variable current than to a steady current. Prof. Hughes undoubtedly showed that this change of resistance is far greater in iron than in other metals. The metal I use for my conductor is iron. I confess that having these experiments in mind, and having followed out Prof. Hughes' experiment myself in the laboratory, I did expect to find a change in the resistance when I used an alternating current, and I expected that to use the same instrument for continuous and alternating currents would necessitate the employment of a constant by which the readings should be multiplied in order to suit it for the alternating current. I confess with the utmost gratification that on testing it by means of the Siemens dynamometer on the alternating current and using the same Siemens dynamometer in testing it for continuous current, there was absolutely no difference in the readings of the instrument so long as the current remained constant, whether the currents were alternating or continuous: and then I remembered that all Prof. Hughes' experiments and all those I had made in continuation of them, were done with a made and broken current in which the rapidity of change from no current to the maximum of current is terrific, and that the very rapidity of change is what produces the spurious resistance, that apparent greater resistance when the broken current is being used, and that when we are using an alternating current—which alternates, it is true, very rapidly, but in a variable manner, the variations are not commensurate with the rapidity of the variations in the interrupted or broken current. In that case these effects which were so startling in Prof. Hughes' experiments do not appear sensibly. At any rate, as a matter of fact, with alternating currents and continuous currents, the instrument reads identically. No constant requires to be introduced.

Mr. S. S. Wheeler—I would like to ask what the resistance of the coil used is?

Prof. Forbes—Nearly a tenth of an ohm.

Mr. Wheeler—And I would also like to ask if you cannot overcome the effect of induction by making one coil reverse upon another?

Prof. Forbes—Perfectly; but there is no effect of induction.

Mr. G. D'Infreville—The instrument being so sensitive, is it not desirable to take some special precaution to prevent it from registering when no current passes through it: for instance, put it in some place where it will not be subjected to a current of air, or the radiation from the sun or other source of heat.

Prof. Forbes—No; I cannot say that it is. When it is under a shade, as far as I remember, I have no recollection of ever seeing the thing moving when there was no electric current passing through it. I am pretty sure it never does move; but you must remember it requires to go round a thousand times before it registers a sixpence worth; so even if there were a few turns it would not matter a bit.

Mr. Mailloux—I want to say that there is one point in the questions which I asked, that Prof. Forbes did not fully answer, though he has since nearly answered it in reply to my friend Mr. D'Infreville. It is in reference to the sensitiveness of the machine as an integrating instrument. In other words, if you take the rates of variation of a current that is not varying at too rapid a rate and then a current, which we will say is comparatively steady, but which is suffering some periodical variations, somewhat like this (illustrating on the blackboard—if we draw another curve in which the rate of speed of the mill-wheel is used to represent corresponding rates of current, then evidently, when we come here (indicating) if that has more or less inertia, then we will find that the increase of speed of the mill-wheel will be a little more, and then we will find that it will dally a little behind, and that here also (indicating) it will be a little slower. In other words, we would find that perhaps these waves would not be followed so closely. That is what I meant by impedence, and the factor which would be the analogue, though not the exact equivalent, of self-induction.

Prof. Forbes—The momentum of the apparatus has no effect. The momentum is extremely trifling. As soon as the momentum tries to carry it around at a different speed from that which is determined by the velocity of convection currents, these vanes are pulling every way through the air and act as a drag on it, and it immediately suits itself to the velocity of the air currents. Since that question has been raised I would like to say this, that you must not expect the instrument to go jumping about at every rapid rate of changes of lamps. With a small current it takes about five minutes to settle down to its readings. With the large currents it takes about a minute. So that really, if these were the variations in the current (illustrating) in all probability the reading you would get would perhaps not reach its maximum quite so soon, and here again it would have a curve whose variations would not be quite so great. That is not due in the least to any momentum in the instrument. That is due to its taking a sensible time to accumulate heat in the wire, and a sensible time to get rid of the heat accumulated in the wire.

Mr. S. F. Shelbourne—Prof. Forbes said it took about five minutes to get its rate of motion in the mill-wheel with a feeble current. Now, in regard to the first question that was asked by Dr. Van der Weyde in respect to making a hole in the top, does it not appear that the apparent inaccuracy of the instrument in registering light currents and in getting its rate may be due to the generation of heat at the commencement, and that heat accumulating in the top of the instrument and heating the glass before it arrives at a point where there is an equation between the generation of heat by the wire and the radiation from the outside of the glass. I simply suggest this, and I ask Prof. Forbes whether he ever has tried in making instruments, instead of making the whole of the cover of glass, to put a dome of copper or some other conducting metal upon it, so that the air which rises and accumulates at the top may sooner reach that equation of radiation from the outside of the instrument with the generation of the heat in the mill-wheel—which operates the mill-wheel.

Prof. Forbes—I am asked as to the inaccuracies of the instrument with a feeble current and the cause of it. I confess that as a user of the meter I have not the slightest objection to its not indicating at its full speed for the first five minutes when you are using very feeble currents. The monetary value of such a thing is imperceptible. If we were wanting to use the instrument to determine the true value of the ohm, or in any such profound research, it would be right to go to very great accuracy. But I do not think it is necessary to go to any greater accuracy than we have at present on that point, nor to make the feeble currents begin their accurate reading a little sooner. I really do not think that practically it is very important. Otherwise, I think the suggestion that was made might very likely be good—using a metal shade. Of course, I have made numerous changes in shades. I have tried a shade which was nearly all metal. But I found this shade before you the best one I have used up to the present time. However, I think it is quite likely that the suggestion just made might be a good one—that a metal shade would be fully as good as the other—might be better—might make it a little more sensitive perhaps. I think there may be a good deal in what Mr. Shelbourne says:

Mr. J. Wetzler—I have no doubt that the instrument in its present shape has gone through sufficient experimentation as to make any suggestions regarding its history a little out of place. But I am a little interested in knowing whether any experiments have been made to determine the best angle of those vanes and the best shape of them, and if the shape determined on there has been found to be the best.

Prof. Forbes—As to the angle I have committed the grossest folly that a man with the experience I have had with this meter could commit—I have trusted theory, I have been positively certain that an angle of 45 degrees must be the best. I am sorry Mr. Wetzler has drawn this confession from me, because it is really the only respect in which I have trusted to theory. As to the other point, the shape of the vanes has been the source of endless experiments. I made an enormous number of changes before I arrived at this shape, and even little details in the shape have come from experiment. I made hundreds of vanes in the experimental stage, and I am pretty sure that if that type of mill-wheel is to be used the vanes are the right shape.

Mr. E. E. Ries—Prof. Forbes mentioned at the outset that his attention was drawn to the devising of this meter by the fact that no meter existed for measuring alternating currents. Now, during the elaborate discussions we have listened to this evening nothing was said about its application to alternating currents. Many would like to hear from Prof. Forbes as to its use in that connection, and if the meter is specially adapted to alternating currents where other meters heretofore devised are not applicable to that purpose.

Prof. Forbes—I should be very pleased to answer any such inquiries where there are points which I have not touched upon sufficiently. Meters in the past have been constructed by the use

Digitized by Google

of, I think, only two principles of electrical action; the one being electro-chemical action and the other, electro-magnetic action. Several instruments have been devised with electro-magnetic action as their basis; but those which were sensitive enough to be practical were obliged to contain iron in their construction. I do not know of any meter which has been brought into practical form which does not depend on one or other of these two principles—the electro-chemical or the electro-magnetic principle. In an alternating current, the current is, of course, alternately going in opposite directions, and in any electro-chemical arrangement which may be used, whatever is done by the current when it is going in one direction is undone by the next alternation of the current. So that it seems to me hopeless to think of designing a meter upon electro-chemical action. The designing of a meter on electro-magnetic action is a far more hopeful thing; though even in continuous current meters I believe the difficulties have not been altogether gotten over; but in using alternating currents the phenomena of self-induction come in, and not only that but also the fact of your having iron. The intensity of the magnetization of the iron depends upon the speed of the alternations; so that as a matter of fact it has been found in every meter which has iron in its construction that the indications of the meter, even if you keep the current perfectly constant, are totally different when the speed of the engine varies; that is to say when the number of alternations per second is changed. So that if you were testing such a meter you would test it at one speed and you would get at its constant, if it had a constant, and then you would give it to your consumers, and, of course, you would not run your engines at that speed; you would run at a totally different speed, which would favor your suppliers. I think it is immoral to suggest such a thing as that; it lends itself to fraud. That is the objection to the electro-magnetic meters, that they give totally different indications even with the same current, when the speed of alternations is changed.

Mr. F. L. Pope—Like a gas meter when you change the pressure?

Prof. Forbes—Yes; like a gas meter when you change the pressure. It was thinking of these things, and thinking also of other effects of the electrical current that made me conclude that the only thing which would do was heat. I have often thought of the question of meters before, and although your president has been kind enough to say that I have invented one or two things I always try not to invent, if possible. Because that is not my business. My profession is consulting work, But sometimes it is irresistible, and when a man defies you to do a thing which you know you can do, it is totally irresistible. I have been thinking over the matter a good deal before, but I never had made up my mind how I was going to do it, but so soon as this defiance was put before me I immediately hit upon this way of doing it. The reason then why this is suitable to alternating currents is that it measures the heat generated; it measures the energy which is used up; it measures a certain fraction of the energy which is being used up in the lamps, and that is what we want to measure, and it will do so whether we are using alternating currents or continuous currents.

Mr. Ries—The speed of the alternations per second has no effect?

Prof. Forbes—It has no effect upon this. This simply measures the energy—a certain fraction of the energy of the lamp.

The President—We have with us this evening a gentleman who has done more than anyone else to elevate the standard of electrical instruments of precision in this country. I allude to Mr. Edward Weston. (Applause.) The subject has already developed many points of great interest, and I have not the least doubt that Mr. Weston can contribute very largely to our information on these points, and also touch upon others that have not yet been brought forward.

Mr. Edward Weston—I do not know that I can add very much to what has already been said in regard to the instrument of Prof. Forbes. I think it is an extremely ingenious and beautiful instrument. There has been already a great deal of time and a large amount of money spent on electric meters for direct currents, and I can say with Prof. Forbes that I do not think we have had any current meter of any value whatever. The electro-chemical system, in use by a very prominent company here, was put out with a great deal of confidence in the results to be obtained from it. I think anyone looking at the principles involved would condemn it from the start. You are to take a small fraction of the total current, and a very small fraction indeed, and pass it through an electrolytic cell, the temperature of which varies from time to time, its resistance is never constant, and pass the bulk of the current through a resistance which is practically fixed. The change in the resistance of the metal would be but a small proportion of the change in the resistance of the electrolyte. Now, in such an instance as that, you are measuring a very small fraction of the current passing, and whatever error you have you are multipling that error by the inverse of that fraction. If you are measuring $\frac{1}{1000}$ you are multiplying your error by 1000. Any one who has had much to do with electro-metallurgy knows that the cells are constantly changing; that to keep the deposit regular and uniform, to keep the resistance of the solution uniform they must be constantly attended to. There is not an electroplater in the country who does not once in a while go in and stir up his baths. Such an instrument is of no real value. We may, therefore, dismiss those instruments entirely from consideration, I think.

A great deal of work has already been done on magnetic instruments; that is instruments which depend upon the magnetic attraction of the current through a wire—or the current through a wire going around an iron core. In those instruments we have all the defects which have been referred to as being possible to exist in this instrument here to-night, manifested a thousand times more, with numerous others that do not exist in this instrument at all. I can speak feelingly on the matter because I have given a great deal of attention to it, and have thought once or twice I had something very good, and have been finally obliged to abandon it. If any one will take the record of the patent office on electric meters, he will see there has been no small amount of time and thought and money spent on that problem. Practically we are in the same position we were before. We had nothing except the electro-chemical meter, which is, as it seems to me, entirely worthless. Instruments have been built which are approximations, but nothing in comparison with this of Prof. Forbes, and if they were they would not be of such universal application as this instrument. This instrument is applicable to either alternating or direct currents with the same practical degree of accuracy, a thing very much to be desired, particularly in the present state of the art of distribution. I will refer a little to some instruments that have been built in my own laboratory, just to give you an idea of the ingenuity and skill displayed in working out this instrument of Prof. Forbes, and how nicely it overcomes all the difficulties. (Mr. Weston here made upon the black-board sketches of the instrument shown in the cuts above.)

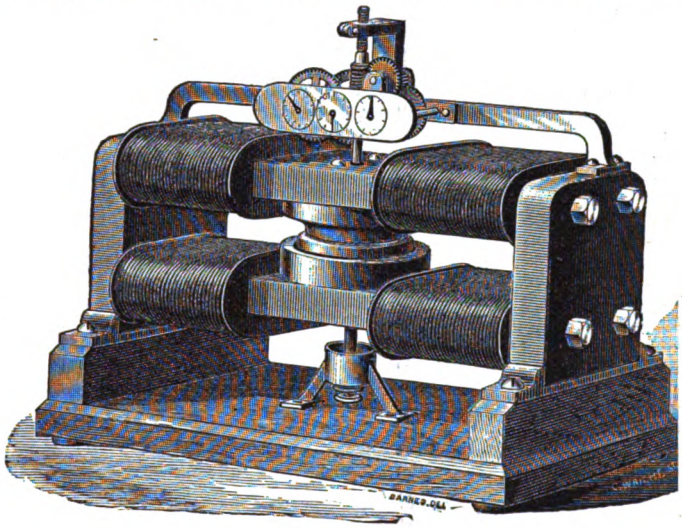

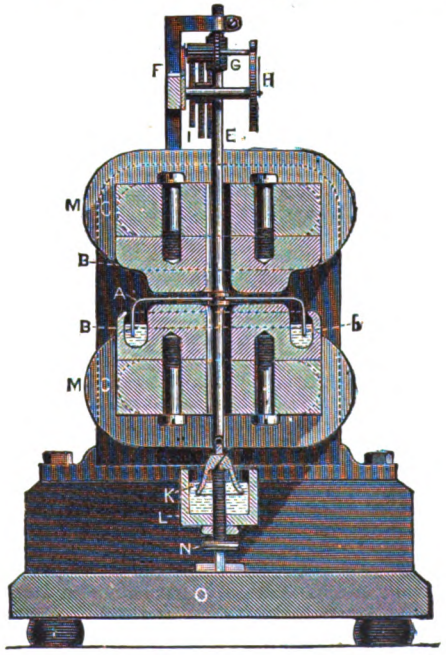

Digitized by Google

We have here an ordinary magnet M, M, with the so-called consequent poles, which in this case are in the form of discs instead of being curved out for the insertion of an armature. These poles are brought as close together as they possibly can be. *b* is an annular chamber running around the pole, in which mercury was poured. A mercury cup L, was also placed on the base of the instrument, in which was inserted a cork float, K, to get as little weight on the pivot, which entered the stem E, here, as possible. This stem passed up right through, connected with the disc A, at the centre, and then engaged a wheel-work, at G, similar to the one that Prof. Forbes has for the purpose of registering the number of revolutions of the disc. Now, if this magnet, which was wound with very fine wire, was so proportioned as to be saturated with the minimum current that would be likely to flow with the difference of potential on the circuit, if the core was kept constantly saturated, then a current passing in to the stem E, would go through the disc readily, down through the annular cup and out through the frame of the magnet, the magnets being placed in derived circuits so as to keep them constantly at the point of saturation. Under those circumstances, of course, we should have a series of radial currents flowing out from the centre to the periphery or *vice versa*. Such being the case, the disc would commence to rotate and record the number of revolutions on the little wheel-work or registering apparatus employed with it. This instrument was the result of a great deal of hard work. It had been absolutely abandoned. I could not find anything that was really satisfactory, and I came to this last of all. It stands on my laboratory table now. It has not been touched for two or three years. The instrument, however, within certain limits, was really admirable, but those limits were so narrow as entirely to prohibit its use for practical work. When the speed varied the element of friction in the mercury came into play here, and very seriously changed the rate of revolution of the instrument. I do not know whether Prof. Forbes has done any work on the friction of a mass of metal revolving in mercury?

Prof. Forbes—I did a good deal of that at one time.

Mr. Weston—If you did, you will understand the difficulty. Nothing was accomplished. Now, when I come to see an instrument like this of Prof. Forbes, after the amount of work that has been spent on meters, it makes me somewhat ashamed to think that I gave so much time to a thing of the kind I have described. I may say that it has already given rise to a very neat form of current instruments in which, instead of having the disc rotate, it was fixed, a large index was brought out from the disc, in which case it was absolutely proportional to the number of lamps in circuit. For a station ammeter I do not know of anything that equals that to-day. It shows one lamp when there are 300, 400, or 500 on just as it shows one lamp by itself. Prof. Forbes has here the simplest instrument that could be built, I think. I do not see how you could improve it very much except in detail. The principles are correct, and I must congratulate him very highly indeed upon the success of the instrument.

Mr. Ries—After Prof. Van der Weyde's suggestion, which was the first one made this evening, about that hole in the roof, it occurred to me that perhaps another principle besides those mentioned by Prof. Forbes might be utilized in the construction of a meter of this class. Prof. Forbes mentioned electro-chemical action, electro-magnetic action and caloric, or heat, as the basis for a measuring instrument of this kind. Now, if we could obviate the friction due to the revolution of these vanes in the air and place them in a vacuum like Crooke's radiometer, and instead of utilizing the principle of heat, use that of light to give motion to the vanes, I do not know whether that would not make a very delicate apparatus. It suggests a different direction in which to work. You might perhaps take these vanes and place them in a dark cell, surround them with a strip of platinum wire or carbon filament and use the variations in light to change the number of revolutions per second, and that could be recorded by an apparatus similar to that used by Prof. Forbes. I simply offer that as a suggestion.

Mr. Weston—I did not speak of the general class of meters. There are such meters as are dependent on the action of clock work. A good deal of work has been done on them. I think Mr. Gardiner took one of the first patents. In this case, I think, the clock work was to keep the gear wheels moving at uniform rates, and the device for transmitting that through the recording apparatus was to enable a change to be made in the rate of recording. Of course there has been a great variety of instruments of that class designed. Then a class has been designed based upon the quantity of gas generated by electrolysis. That can be used; but the same objection holds in that that holds in the other one, that you cannot put that instrument in the direct circuit. It must be in a derived circuit and you must then measure the gas, which introduces a great many errors which have to be compensated for. Then there have been other instruments in which it has been proposed to use strips of paper running under a stylus which could be moved more or less by a magnetic current. But you can see, when you sift them all down that there is not one which is applicable to any system of work that is now in use. The instrument before us appears to me to be so applicable. Some people may say that is a very delicate instrument; well, there is a great deal of very delicae work about electric lighting, and the sooner we get men who are delicate enough to handle it the better we shall be off. You cannot wait for men to be educated, nor depend upon men entirely. You have got to run on with the art, and the men must grow up with it. A few years ago there were no ammeters. Volt-meters used to be ridiculed. Everything was rule of thumb. People are beginning gradually to see that it is necessary to use instruments. They find it on the balance sheet. I would no sooner think of running a manufacturing establishment where electrical apparatus is made without delicate measuring apparatus than I would think of running a machine shop without delicate measuring apparatus. It is just as foolish to try to get along with a foot rule as your standard in a shop without using standard gauges. The man who works to $\frac{1}{1000}$th of an inch, which should be the absolute limit on all first-class work, is the man you want to employ. He will save you money, because he will do your work the same way every time, and there will be no tinkering and pottering to get things together.

The President—It is not at all our practice to call upon gentlemen to speak, but I must say that I think I do but utter a general desire when I request Mr. Howell to favor us with a few remarks. He is working in a department which has been more than once alluded to this evening, and with which he is very well conversant.

Mr. Howell—Mr. chairman, I was very much surprised to hear what Mr. Weston said. I am surprised that he does not know that there is a temperature correction in the Edison meter. The Edison meter has been in use industrially for five years, and I say without hesitation, and I am in a position to know the opinion of the practical men who are using the Edison meter, that they think a great deal more of it to-day than they did at first, and the more they use it and the more they know of it, the better they like it.

There is one thing about that meter of Prof. Forbes which now occurrs to me as the result of experience with instruments sent out for general use. There is one peculiarity about every American electrician—he has got to know what things are made out of, and if you do not show him he will find out for himself. Now that instrument shows itself. You can look at that and see what every part is, and you do not need to take it apart. I have sent out a great many instruments. The first thing a man does with them is to pull them apart and see what they are made of. There is no necessity for pulling that instrument apart, you can see all through it.

There is one thing I would like to ask Prof. Forbes, and that is the effect of lowering the shade. I see he has a shade there very much higher than the instrument apparently needs. I would like to know if that is necessary to allow for air circulation.

Prof. Forbes—Yes; it is more sensitive with a higher shade. That is about the limit. I have gone through dozens of shades to see what is the right size and shape, and that is the one I fixed upon.

Mr. Howell—The impression that instrument makes upon me, and upon a good many I should think, is that there would be a difficulty in shipping it, and getting the men who have to put it up and use it to do so properly. I know that the men who will use those meters, the men who do our meter work in electric lighting are not men in whose hands I would like to put an instrument of that sort. How is that shipped, may I ask, Prof. Forbes?

Prof. Forbes—I packed the glass case separately when it came over. On that occasion I took off the vanes. I had three parcels for that instrument, one containing the clock work and all the brass work you see there; another containing the mill-wheel and another containing the glass shade. They have traveled in England very large distances with that arrangement in action which I pointed out before by means of which the vanes are pushed up against a stop. The person who was going to use it had nothing to do except tightening up a screw as hard as it could go, and then it was free to work. There was absolutely nothing to be done except that, and I think I should do that in future if I replaced that glass shade with a metal cover. I have not replaced it with a metal cover, because you can see it work. I like the glass shade, but I daresay a metal shade with a window will in practice be the thing that will be adopted, in which case the whole thing will be perfectly safe to pack up in one piece. I shall certainly not allow the workman who uses it to touch the mill-wheel. I shall have that arrangement which is on it now for lowering the vanes on to the point.

Mr. Weston—I take it, gentlemen, that the instrument exhibited here is not intended to be the instrument in use. We know that people do a good deal to get around meters. Gas companies will tell you that people will punch a hole through. But, of course, it is practicable to protect that as well as we can protect anything.

In regard to the electrolytic method by the direct current I may say I am aware, and I have been aware for a long time, that

Digitized by Google

Mr. Edison has had a temperature correcting device in circuit that will work within certain limits. I still say, and I say it without any fear of being proved incorrect, that such a meter cannot work successfully and practically within the limits that it ought to work to, and I think that is the universal testimony of consumers at any rate. I suppose there will always be more or less complaint by consumers about all kinds of meters, but I think they have been pretty well founded in that case, because I think the meter is incapable of doing as good work as we want a meter to do. I do not mean to say you cannot make a meter that will work.

Mr. F. B. Crocker—I ran roughly over the amount of heat that would be generated in Mr. Forbes' instrument, and it came so high that I should like to run over the figures now and see if they are right. He says the resistance is a tenth of an ohm,

Prof. Forbes—Under a tenth of an ohm, I said.

Mr. Crocker then went through a calculation based upon a current of 20 amperes with a drop of 2 volts, and arrived at the conclusion that the quantity of air enclosed in the glass shade of the meter would gain in temperature at the rate of 400 degrees per minute, and said: "It is a very high figure, I cannot believe it is right, but we know that the capacity of the amount of air in that shade for heat is very small, and we also know that the amount produced in a resistance of a tenth of an ohm by 20 amperes of current is quite large. Therefore perhaps that figure is approximately right."

Prof. Forbes—I would suggest that Mr. Crocker instead of taking that line would simply find how much energy is used in the meter when 20 lamps are burning, and find out how much energy is used in the lamps when 20 lamps are burning, and divide one by the other and get the percentage. Settle upon the percentage more than which you are not going to use, and you have it. I should think very much over 2 per cent. or so would be very undesirable to use. In some cases it might go up to 3 or 4, possibly, but I should think as a general rule you would find 2 per cent. as much as one would care to use.

Mr. Crocker—I did not mean to criticise the efficiency of the apparatus. I did not mean that Prof. Forbes' meter used up any considerable fraction of the current. I merely meant to bring forward as an interesting point exactly how much heat is produced in the meter in a given time, and to calculate it as well as I was able to with the figures I happened to have in my mind.

Prof. Forbes—Then I would point out that theoretically you have to take in another point, and that is that there is continual radiation going on, and that during constant running there is no addition to the heat contained in the instrument. It arrives at a constant condition when the heat generated in the wire is equivalent to the heat radiated from the surface of the glass. From numerous experiments both in Sir William Thomson's laboratory and also by Professor Tait, we have got at the rate of radiation, and it is very easy to go on with the calculation a step further than done just now and calculate what is the temperature which would be reached when the radiation from the surface is equal to the heat generated from the wire. The problem looked at simply as a theoretical question of interest can actually be worked out by going a step further than Mr. Crocker has just stated.

Mr. Wheeler—What is the approximate temperature of the shade after running a few minutes?

Prof. Forbes—Running at its full, it is 120, perhaps.

Mr. Wheeler—Even at that low temperature it must get enough higher than the surrounding air to radiate 2½ heat units.

The President—While these calculations were being made as to the condition of the air in that globe, I was very forcibly reminded of the condition of the air in this room, and it made me wish for the time, not so far distant, I hope and believe, when both the civil engineers and ourselves will have a meeting hall worthy of the two societies.

The discussion being at an end, though by no means exhausted, I think nothing remains but to ask Prof. Forbes to close it with such remarks as occur to him as proper, and that being done we will adjourn to the next room where a collation awaits us.

Prof. Forbes—Mr. President, I really have very few remarks to make except to say that I feel that this discussion has been of great value to all of us. Very interesting points have been raised and I have heard suggestions which have interested me very greatly. Of course in working at this instrument one started from theoretical notions, but one gave them up very soon, and one had all sorts of resources at one's hand to vary the forms of those curves some of which I have already shown you. I should like to show you the curves which I got when I first made this instrument. The curve ought to be simply a horizontal line. One of the curves which I first got was of about this shape (drawing a very irregular curve on the black-board), and yet I had the greatest hope even when I got that. By two changes I was able to reduce the line down to a horizontal, and there were numerous other changes. In the course of working that instrument out I learned more about convection currents than I knew there was to learn, and really one has power now to handle them as one pleases.

I have no more remarks to make except that I thank every one here for the pleasant discussion we have had this evening. I think it has been very instructive, and I have felt throughout, the same kind, cordial sympathy that was shown in England. I did not expect to find everyone ready to look upon it in the way in which Sir William Thomson did, without any sign of regret that it happened to be done by another. I thank everyone here most heartily for the cordial way in which they have received this stranger. (Applause.)

On the motion of Mr. J. H. Pendleton, the Institute offered its hearty congratulations to Prof. Forbes upon his beautifully simple and valuable invention, as well as its thanks for his luminous paper and his exhibition of the coulomb meter before it.

The members of the Institute and guests then spent an agreeable hour in an informal reception to Prof. Forbes, during which a collation was served.

ANNUAL REPORT

OF THE

PRESIDENT OF THE WESTERN UNION TELEGRAPH COMPANY

FOR THE YEAR ENDED JUNE 30, 1887.

CAPITAL STOCK.

The capital stock of the company outstanding is $81,199,852.06, of which $21,282 belongs to and is in the treasury of the company. It was increased during the year to the extent of $1,200,000 for the special purpose of taking up the dividend scrip of April, 1886, which did not amount to quite that sum. A small proportion of the capital stock is, however, still represented by certificates of indebtedness for which capital stock certificates have not yet been issued.

BONDED DEBT.

The bonded debt at the close of the year was as follows:—

Bonds due March 1, 1900, 6 per cent	$891,324.00
Bonds due May 1, 1900, 7 per cent	4,920,000.00
Bonds due May 1, 1902, 7 per cent	1,336,000.00
	$7,147,324.00
Less balance of sinking funds, appropriations not yet used for redemption of bonds	364,893.04
	$6,782,430.96

During the year, sterling bonds due March 1, 1900, to the amount of £2,000, and building bonds due May 1, 1900, to the amount of $37,000, were redeemed by the sinking fund trustees.

BUSINESS OF THE YEAR.

Surplus, July 1, 1886		$4,309,833.53
The revenues, expenses and profits of the year ended June 30, 1887, were as follows:—		
Revenues	$17,191,909.95	
Expenses	13,154,628.54	
Profits		4,037,281.41
		$8,347,114.94
From which there was applied:		
For dividends	$811,864.43	
" interest on bonds	493,074.40	
" sinking funds appropriations	39,991.00	
		1,344,929.83
Deducting which, leaves surplus, June 30, 1887, of		$7,002,185.11
The expenses for the year were:		
For operating and general expenses		$9,077,445.42
" rentals of leased lines		1,899,953.74
" maintenance and reconstruction		1,673,670.11
" taxes		278,534.44
" equipment of offices and wires		224,964.83
Total expenses as above		$13,154,628.54

RECAPITULATION.

The net profits for the year were		$4,037,281.41
Out of which there has been paid:		
Interest and sinking fund	$533,065.40	
Dividend	811,864.43	
And added to the surplus principally invested in new property	2,692,351.58	
		$4,037,281.41

A handsome increase in gross earnings over the previous year has been realized, notwithstanding the more extended competition and further reduction of rates, whilst of the considerable increase in expenditures the greater part was for extensive and thorough reconstruction of important trunk lines, which may now be maintained at little cost for some years. As these lines have been rebuilt of larger and stronger poles to carry additional wires, much of the cost might properly have been charged as a betterment to new property account. But it is not the habit of the company to charge anything to the construction and purchase of new property that is not solely and entirely new and additional.

There has been an increase of 4,104,723 in the number of messages handled during the year over that of the previous year, being, as the table will show, the largest increase in traffic, ever made by the company in any one year over the year previous, except in

Digitized by Google

1881, when the American Union and Atlantic and Pacific companies were taken in, notwithstanding the large increase of leased wires to the press associations and private parties.

Though there has been the largest percentage of increase in Pacific Coast and other long-distance messages, yet the average rate received per message has been reduced to 30¼ cents, as against 30 9/10 last year, with a corresponding reduction in the cost to the company of handling messages to 23¼ cents per message, as against a fraction under 24 cents the previous year.

In ascertaining the receipts and expenses per message, all revenues not derived from the transmission of messages over land lines, and all expenses not pertaining thereto, have been eliminated. It is, therefore, an inevitable conclusion, that every message transmitted, enveloped and delivered by a messenger, at whatever distance, for 10 or 15 cents, is done at a loss. Even purely city messages, where office rents have to be paid, cannot be handled for 15 cents with any profit. The number of messages stated are the messages actually handled, long and short, averaging, with date, address and signature, from 17 to 20 words each, with the press service calculated at one message for each 30 words transmitted, which has always been the basis of statistics as to messages.

GENERAL STATEMENT.

The following exhibit shows the revenues and disbursements of the company for 21 years from July 1st, 1866:—

Surplus of income acc't, July 1, 1866..	$275,357.24	
Net revenues for 21 years, from July 1st, 1866, to June 30th, 1887.....	86,037,797.65	
Making an aggregate, June 30, 1887, of		$86,313,154.89
During this period there was applied:—		
For cash dividends.....	$47,141,615.26	
For scrip dividend.....	1,199,852.06	
For cost of 59,606¼ shares of Western Union Telegraph stock, purchased and owned by the company, which was distributed to stockholders in 1879.....	3,302,198.90	
For cost of 72,010 shares of Atlantic and Pacific Telegraph stock, purchased and owned by the company, the proceeds of which, in Western Union stock, were distributed to stockholders in 1881.....	1,806,250.00	
For interest paid on company's bonds	8,683,338.89	
For cost of 396 4/100 shares of Western Union stock, purchased and owned by the company, which were cancelled to make the capital stock, after the issue of the new stock in 1881, exactly $80,000,000.....	26,836.00	
For amount reserved for interest on bonds and for sinking funds, accrued to June 30th, but then not yet due and payable.....	106,086.64	62,266,177.75
Leaving a surplus of.....		$24,046,977.14
Which is represented as follows:—		
Construction of new lines, erection of additional wires, patents, etc., prior to October 1, 1881.....	$9,396,160.08	
Purchase of telegraph lines and of the stocks of companies leased by the Western Union Co. (upon which interest or dividends are paid as rental) prior to Oct. 1, 1881.....	2,448,182.66	
Gold and Stock Telegraph Co.'s stock (18,905 shares).....	1,176,009.00	
International Ocean Telegraph Co.'s stock (15,170 shares)	961,606.42	
Brooks' Underground Telegraph Co.'s stock (1,000 shares).....	95,000.00	
Southern Bell Telephone and Telegraph Co.'s stock (1,687 shares).....	84,325.00	
Sundry other stocks and bonds.....	93,739.68	
Western Union bonds redeemed and cancelled.....	1,446,809.27	
Sinking funds (portion not yet used for redemption of bonds, exclusive of interest allowed by trustees).....	313,623.82	
Broadway and Dey street building.....$2,365,639.52		
Less amount provided from the proceeds of bonds issued.....	1,802,202.00	
	563,437.52	
Real estate other than above..... ..	283,608.50	
Supplies and material on hand unissued.....	182,290.08	
Surplus, June 30, 1887.....	7,002,185.11	$24,046,977.14
On account of these assets a stock distribution was made in 1881 to the amount of...		15,526,590.00
Deducting which leaves a balance of..		$8,520,387.14
There has been expended in the construction and purchase of telegraph lines and other telegraph properties since October 1, 1881....		$9,348,318.20
Of which there was provided by the sale of bonds.....	$1,000,000.00	
And by the sale of telegraph and telephone properties.....	143,976.87	
And there has been capitalized by the issue of a stock dividend.....	1,199,852.06	
Leaving a remainder of expenditures out of earnings for construction and new properties.....		$2,343,828.93
		$7,004,489.07

There was also expended for construction and new property between January 1st and October 1st of 1881, $1,225,915.22, which was appropriated out of earnings, and carried into the quarterly balance sheets up to the latter date.

The total amount expended since January, 1881, in the construction and purchase of new properties, added to the plant is $10,574,233.22, of which only $1,143,976.87 was provided from other sources than the revenue of the company from earnings and investments; $1,225,915.22 was directly appropriated out of the earnings of the first three quarters of 1881; $1,199,852.06 was capitalized by issue of the stock dividend in April, 1886; and the remainder, $7,004,489.07, has been advanced to the construction account from the surplus earnings of the company.

Of the $47,141,615.26 paid to stockholders in cash dividends since July of 1866, $26,007,687.92 have been paid in cash dividends from the net earnings of the company since January of 1881, and in addition thereto $10,574,233.22 have been advanced and paid within the same period for new and additional properties, on account of which latter $1,199,852.06 have been distributed to stockholders in capital stock.

This aggregate of $36,581,921.14 has been paid out of the net earnings of the company over and above its fixed charges for interest on bonded debt and sinking fund, except $1,143,976.87 derived from the sale of bonds and other securities.

The following table exhibits the mileage of lines operated, number of offices, number of messages sent, receipts, expenses and profits, for each year since 1866.

STATISTICS.

Year.	Miles of poles and cables.	Miles of wire.	Offices.	Messages.	Receipts.	Expenses.	Profits.
1866..	37,580	75,686	2,250	.....	$	$	$
1867..	46,370	85,391	2,565	5,879,582	6,568,925.36	3,944,005.63	2,624,919.73
1868..	50,183	97,594	3,219	6,404,505	7,004,560.19	4,362,849.32	2,641,710.87
1869..	52,099	101,584	3,607	7,084,693	7,316,918.30	4,568,116.85	2,748,801.45
1870..	54,109	112,191	3,972	9,157,646	7,198,737.96	4,910,772.42	2,287,965.54
1871..	56,032	121,151	4,506	10,046,077	7,937,148.85	5,104,787.19	2,832,361.66
1872..	62,033	137,190	5,337	12,441,499	8,467,065.77	5,666,863.16	2,790,202.61
1873..	65,757	154,472	5,740	14,456,832	9,333,018.51	6,575,055.82	2,757,962.69
1874..	71,585	175,785	6,188	16,329,256	9,262,653.98	6,755,733.83	2,506,920.15
1875..	72,833	179,496	6,565	17,153,710	9,564,574.60	6,335,414.77	3,229,157.83
1876..	73,532	183,832	7,072	18,729,567	10,034,983.66	6,635,473.69	3,399,509.97
1877..	76,955	194,323	7,500	21,158,941	9,812,352.61	6,672,224.94	3,140,127.67
1878..	81,002	200,202	8,014	23,918,894	9,861,355.28	6,309,812.58	3,551,542.70
1879..	82,987	211,566	8,534	25,070,106	10,940,640.46	6,140,200.37	4,800,440.09
1880..	85,645	233,594	9,077	29,215,500	12,782,894.53	6,948,956.74	5,833,937.79
1881..	110,340	327,171	10,737	82,500,000	14,393,543.85	8,485,264.13	5,908,279.72
1882..	131,000	374,368	12,068	88,842,247	17,114,165.92	9,996,096.92	7,118,070.00
1883..	144,294	432,726	12,917	41,181,177	19,454,902.98	11,794,553.40	7,660,349.58
1884..	145,057	450,571	13,721	42,076,226	19,632,033.60	13,022,583.00	6,610,435.70
1885..	147,500	462,283	14,184	42,066,583	17,700,833.71	12,005,900.58	5,700,824.13
1886..	151,832	480,607	15,142	48,249,807	16,208,688.35	12,378,783.42	8,919,835.13
1887..	156,814	524,641	15,658	47,394,530	17,191,900.95	13,154,028.54	4,037,281.41

The foregoing table exhibits the growth and increase of property and business year by year, for 21 years. Nearly 5,000 miles of line, over 35,000 miles of wire, and 516 offices, and their equipments, were added to the plant during the current year. Of these additions, about 2,000 miles of line, and 5,000 miles of wire were purchased, and the remainder newly constructed; and all paid for in cash out of surplus earnings in the treasury.

The construction account has been unusually large, because of the great extensions of new and branch railroads, compelling extensions of telegraph lines on new routes and into new territory. The demand for private wires has also compelled the erection of additional wires on trunk lines.

The number of messages handled shows a larger percentage of increase in traffic than in any one year since 1881, which, with the increased exactions of prompt service, involved the necessity of erecting additional wires on all the principal trunk routes.

Considering the amount of business that must have been done by other companies, there can be no business in the country that has developed, and is developing, such rapid growth and increase as the service of the telegraph.

PRESS SERVICE.

About 92 per cent. of our toll revenues are derived from commercial and family and social messages, and 8 per cent. from the press. The news service delivered by this company's wires during

Digitized by Google

the year—counting one delivery at each place served—foots up some 740,000,000 words, of which 578,000,000 words were for the various Press Associations and 162,000,000 words were special reports for individual newspapers.

The 578,000,000 words for Press Associations were delivered to and published by an average of 2¼ newspapers at each place where they were taken off, which added to the special reports would make some 1,467,000,000 words of press report received and published by the various newspapers throughout the country over the wires of this company during the year.

The average rate received for special reports transmitted and delivered was a fraction over one-half cent per word.

The average rate received for the Associated Press reports delivered (counting one delivery at each place) was about 10½ cents per 100 words.

In the larger cities where these reports were delivered by leased wires to an average of four or five papers the cost to each paper for transmitting the reports was from 2½ to 3 cents per 100 words.

This is undoubtedly the cheapest telegraph press service of any country in the world, and especially so when it is considered that the average distance the reports are transmitted by us is three times as great as that of other countries.

Although the service has been steadily improved, and it is believed now comprises the best telegraph service rendered by any telegraph system in the world, we still continually realize that our greatest competitor is time, and that just in proportion that we can overcome time in the transmission and delivery of messages will our business be increased.

The table appended[1] exhibits the assets in the treasury, as verified by the report of a committee of the Board after personal examination, and shows very few and immaterial changes from that of the previous year. They are set down at their par value, but most of the leading telephone properties are worth a great deal more.

The ensuing year, of which the approximate footings of the first quarter are already known, promises very much better results. The additional wires erected on trunk lines and through routes have chiefly been of hard copper, affording greater conductivity, and enabling a better service than ever before. Undoubtedly a large increase of revenues over those of the past year, herein reported, would be realized, even without the important and valuable acquisitions so recently made. The facilities and advantages afforded by the addition of the Baltimore and Ohio system, it is confidently believed, will largely increase the revenues. This acquisition and others made since the close of the fiscal year, and not included in any of the figures of this report, will swell the company's plant to about 162,000 miles of lines and over 580,000 miles of wires. Respectfully submittted,

NORVIN GREEN, *President.*

THE AMERICAN STREET RAILWAY ASSOCIATION.

ANNUAL MEETING.

The American Street Railway Association held its sixth annual meeting at the Continental Hotel, Philadelphia, October 19, 20 and 21. The most noteworthy feature of the convention was the amount of time and attention given the consideration of electricity as a motive power. Electrical interests were well represented by the presence of Messrs. E. V. Cherry, F. J. Sprague, H. McL. Harding, A. K. Stiles, C. J. Van Depoele, G. W. Mansfield, C. E. Stump, A. Reckenzaun, R. W. Blackwell, T. C. Martin, E. E. Ries, A. H. Henderson, E. H. Hastings, A. H. Chadbourne, G. H. Condict, H. A. Foster, J. M. Pendleton, E. J. Bagnall, W. H. Knight; to which list may be added the names of Wm. Wharton, Jr., and Calvin A. Richards, both of whom enjoy high repute in street railway circles, and have pronounced views in favor of the use of electricity for urban passenger traffic.

At the first session Mr. Wharton read an extremely instructive and valuable paper on electricity as a motive power, which we print elsewhere. (See p. 443.)

A paper on Street Railroad Construction was read by Mr. Richards, in the course of which he said:

"The time is fast approaching, if not already here, when electric motors will come into general use for the propulsion of our cars. When accumulators or storage batteries are used, our cars will have to carry an increased weight of 3,000 to 4,000 pounds. It is probable, also, that in time we shall find it profitable to replace our present cars with longer ones, capable of seating a larger number of passengers; all this will require heavier rails and better road, and we shall have to construct our tramways when building new tracks, or reconstruct our old ones for this purpose.

"A section of rail weighing from 55 to 60 pounds, with the cross ties placed four feet apart, will be sufficiently stiff to answer the purpose. Great care should be exercised, however, to have every part of the track construction well and solidly done, especially at the rail joints, and the whole track rigidly held in place, so that inaccuracies in this respect will not cause the motors to leave the track, nor settle it and throw it out of place, by the increased weight and speed of our cars."

1. We omit the table.

On Wednesday afternoon, Mr. F. J. Sprague was unexpectedly called upon to address the meeting. In a brief but pointed address, he set forth the relative merits of the overhead, conduit and storage battery systems, with much clearness and suggestiveness. He also discussed the location of motors on cars and their connection to the driving axles—and expressed opinions decidedly favorable to the use of two motors under each car, one to each axle of a four wheeled car, and one to each truck of an eight wheeled car.

On Thursday, Mr. C. J. Van Depoele addressed the meeting on the general subject of electric railways, and in illustration of the growth of electric traction, submitted some account of the work of his own company, as follows:

ROADS RUNNING.

Location.	Miles.	Cars.	Power.	Total power cost per day.
Windsor, Ont.....	2	2	Steam, rented....	$4.00
Detroit, Mich.	2	8	" "	6.00
Appleton, Wis.....	5	5	Water	4.50
Port Huron, Mich....	5	5	Natural gas.....	2.00
Scranton, Pa.....	4½	7	Culm.....	7.00
Binghamton, N. Y...	5½	6	Steam, rented....	10.00
Lima, O.....	4	6	Crude oil.....	4.00
St. Catherines, Ont...	6	6	Water.....	3.00
Montgomery, Ala....	13	18	Steam.....	14.00
Total.....	47	63		

UNDER CONSTRUCTION.

Location.	Miles.	Cars.	Power.
Jamaica, L. I.....	6	10.....	Steam.
Ansonia, Conn.....	3½	{ 4 and 1 loco. } of 75 h. p. } ...	Water.
Omaha, Neb.....	7	10.....	Steam.
Dayton, O.....	6	12.....	"

Mr. E. E. Ries briefly described his method of increasing the tractive adhesion of driving wheels, after which Mr. R. W. Blackwell made an address, chiefly devoted to arguments against the use of storage batteries. He presented his criticisms in the name of the Bentley-Knight Electric Railway Co. The argument was as follows:

"We will assume that the storage battery is beyond the experimental stage, capable of driving a car eight hours without recharging. Granting the most favorable premises, we will make a short practical comparison between the storage and direct systems, both as to operating expenses and first cost. We will also assume that a set of street car batteries will weigh 3,200 lbs.; that they will give a return of 65 per cent. of the electrical energy expended in charging; that a set which will run eight hours can be charged in 10 hours, and that a set will run 12,500 miles without renewal of the batteries or extensive repairs.

"1st. *Cost of Operation.*—Two great losses are chargeable against the economy of the storage system, viz.: Loss in conversion of energy in the battery and the additional weight carried on the car. In the direct system, electricity from the generating dynamo is transmitted to the motor on the car by the line conductors. In the storage system, electricity from the dynamo is used to charge the batteries, which, in turn, supply the motor. In the latter system the loss is conceded to be 35 per cent. In the former system, it is a matter of simple arithmetical calculation to make the loss inappreciable. It should never exceed five per cent. however long the line. This leaves a difference of 30 per cent. against the storage system.

"A greater loss is entailed by the heavy load of batteries which the storage system car must carry. It necessitates a heavier car construction and a heavier motor, all of which adds to the weight. In practice two motors are often used. The additional weight entailed by the storage system easily reaches 4,000 pounds per car. The motor and driving mechanism for a car, run under the direct system weigh 1,600 pounds. The equipment where batteries are used is necessarily heavier on account of the added battery weight to be moved, but we will keep the same figure for both. A car weighs nearly 5,000 pounds. In Boston (1886), the average number of passengers per car mile was 10, so that the average load may be put at 1,400 pounds. We then have the following summary:

	Storage system.	Direct system.
Car.....	5,000 lbs.	5,000 lbs.
Motor, etc.....	1,600 "	1,600 "
Passengers.....	1,400 "	1,400 "
Batteries, etc.....	4,000 "	.....
	12,000 lbs.	8,000 lbs.

"That is, 50 per cent. more power must be expended to propel the storage car, and 30 per cent. more power to overcome the loss of conversion in the batteries, making a total of 80 per cent. greater cost for power than the direct system. This means not only 80 per cent. more coal consumed, but 80 per cent. added to the size and cost of the steam and dynamo plant in the generating station.

"There are additional losses in the storage system which are less

Digitized by Google

easy to compute, but which are hardly less serious than those mentioned. Twelve thousand five hundred miles are given as the life of a battery. Now, 100 miles per day is not an excessive mileage for an electric car, so that the battery must be renewed, wholly or in part, every 125 days, or three times per year. What this would cost it is impossible to say, but it is plainly a serious item. On the other hand the depreciation of an overhead wire, or a conduit, is very slight, not more than 3 or 4 per cent per annum. The handling of storage batteries is also a very considerable item. To transfer 3,200 lbs. into and out of a car two or three times a day is not a slight matter, while the shifting and removal necessary to a large plant must be added to it. None but skilled labor could be employed in handling, recharging and taking care of the batteries. That has been conclusively proved.

"2d. *First Cost of the Storage System.*—There is little reliable data on this point, but, putting a very moderate estimate upon it, it far exceeds that of the most expensive direct system.

"There should be at least three sets of batteries for each car—a considerable increase in the motor capacity—80 per cent. more dynamo and steam plant in the generating station, and twice the floor space, since each car must have a stand for charged and discharged batteries. This could not cost less than $2,500 per car, which is to be balanced against the conduit and line conductors of the direct system. The cost of the latter varies, of course, with the number of cars per mile. Taking a well-known road in Boston, however, which has 700 cars and 70 miles of track, there are ten cars per mile, which, equipped with conduit and conductors at $4 per foot, would cost $2,000 per car. As a matter of fact, one-fourth of this mileage could be equipped with overhead wire at $2,500 per mile, which would bring the cost to $1,650 per car.

"An important fact, which we have left out of this computation, is that most existing roads must be equipped with new and heavier track to fit them for the weight of storage cars. The present rail will stand an addition of 1,600 lbs. to each car, but not an addition of 5,600 lbs. (The most widely-advertised storage car run in this country weighed over 6¼ tons.) These facts are plain and simple, and, in view of them, it is difficult to see how the introduction of the storage system can be seriously contemplated when conduit and elevated conductor roads on the direct system are feasible. As we have said before, the superficial appearance of the storage battery for street cars is very attractive. It is a simple electrical problem to charge a battery and run a car for an occasional trip. A boat equipped with a battery has crossed the English channel, while for lighting railway trains, where weight and expense are no object, and the work easy and constant, it has a certain value, but for practical street car work, it has just enough promise to make it a dangerous and insidious deceit. The storage power, however, is a disease which users of electricity must go through as a child has the measles. The electric lighting interests went through it some years ago at an enormous expense, and to-day not one of the large electric lighting companies is supporting the storage battery. If this paper, hurriedly written and far from complete, will in any degree mitigate the malady to the street railway interests, it will have attained its end."

On Friday the members of the association, by invitation, visited the establishment preparing by the company, of which Mr. Wm. Wharton, Jr. is at the head, and which is to be known as the Electric Car Co. of America, and which has secured the services of Mr. A. Reckenzaun, so widely distinguished for his services in developing electric traction, particularly the storage battery method. After some successful experiments with a new car, not yet fully completed, witnessed by the members of the association and other guests, an elegant luncheon, provided at the works by Mr. Wharton, was served to the company. During the lunch, Mr. Wharton, speaking of the use of storage batteries for electric traction, said that he did not feel "sanguine" but "certain" on the subject, and that he intended to press forward on that line and to be in the lead even if alone.

THE ELECTRICAL ENGINEERING DEPARTMENT AT CORNELL UNIVERSITY.

THE equipment at Cornell in the line of electrical engineering bids fair to become, if it is not already, the most complete in the country and probably in the world. It has been almost wholly contributed by friends of the University at the suggestion of the Director of Sibley College and others interested in its progress. The last and most important addition to the collection, that of the Westinghouse 650-light alternating current dynamo, exciter, lamps and other material required in establishing the plant, has already been mentioned. The list of dynamos now includes the Edison, the Gramme, the Mather, the Westinghouse alternating current, the Westinghouse continuous, a number of Weston and minor makes and all sizes from a little toy machine made in our own shops to the 50 or 60 h. p. machines just added to the list.

There comes with this liberality on the part of the friends of the University an embarrassment of real importance: there is no immediately available room for the installation of these machines. The dynamo room now appropriated to the purpose is hardly large enough for the "cradle" used in conducting experiments on a single machine. The Weston machine is tucked in one corner, and the Edison and Mather machines are temporarily placed in the middle of the floor and driven as best can be done from there. There is actually no room even to lay down the new machines now *en route* from Pittsburgh, still less to place them for use. In this emergency the Director has obtained permission from the Trustees to make temporary provision for them by throwing the existing toilet rooms into the machine shop, thus securing a space some 15 or 18 feet by nearly 40 in which to place all these machines. It has long been considered advisable, on the score of safety and convenience, to remove all heavy machinery from the main building, and this transfer of the dynamo room will give opportunity to effect other improvements there in time. Professor Morris is already arranging new toilet rooms and getting ready to tear down the brick partitions which have been found to be in the way of the new arrangement. Professors Van Vleck and Smith are preparing plans for the belting and countershafting, in consultation with Professor Nichols, and the work is to be proceeded with at once. The space now given up to this machinery must, however, in time be required for the extension of the machine shop, and it is only a question of time when a building must be constructed for this conrse and its collections. Nearly forty students now enter the course annually, and it is only second to the regular course in mechanical engineering in importance in the Sibley College organization. The expenditure of all that may be needed to make its material part complete, aided as it is so effectively by its friends outside the University, will be more than justified.

Professor Thurston estimates that about $100,000 should be expended in its permanent establishment; $60,000 on building, including $15,000 on water and steam power, each of which should give 150 h. p., the one for use in ordinary work, the other whenever experimental work compels the utmost possible regularity of speed; and the balance, $40,000, in supplying needed additions to the equipment of apparatus of exact measurement for heavy currents and to furnish the income needed for running expenses, including fuel, one workman and an assistant to the professor of physics who should be placed in charge of this valuable property; which, although a part of the Sibley College establishment, is really managed by the department of physics in all except its power-supply. It is not impossible that, as Mr. Cornell used to say. "There is some one walking around who wants to provide this" now greatly needed laboratory. It is certainly an opportunity for some wealthy and public spirited friend of the university and of this part of its work to immortalize itself, while doing a noble work for his fellows.—*The Cornell Sun.*

OBITUARY.

Gustave Robert Kirchhoff.

Gustave Robert Kirchhoff, the German scientist, and inventor of the spectroscope, died October 17th. He was 64 years of age. Born in Koenigsberg, and graduating in medicine at the university of his native city, he went to Berlin, where he practiced his profession until 1850, when he was appointed professor of physics at Breslau. Four years later he took the same chair in the faculty at Heidelberg, and in 1875 he was appointed to the same professorship at Berlin, and elected a member of the Academy of Sciences. Before this he had made for himself a noted name in the scientific world by his researches and discoveries in the field of electricity and his studies of the elasticity and tension of steam. In 1859, with M. Bunsen, he made the wonderful discovery of spectrum analysis. This discovery, applied to the investigation of the physical nature of the celestial bodies, gave birth to a new and very interesting science—physical astronomy, to which a number of savants, notably M. Janssen, in France, and Mr. Lockyer, in England, have devoted themselves with important scientific results. Kirchhoff published his own discoveries in this field in a work entitled "Studies of the Solar Spectrum and the Spectra of Simple Bodies," issued in Berlin in 1866.

O. E. Woodhouse.

Mr. O. E. Woodhouse, senior partner of the electrical engineering firm of Woodhouse & Rawson, London, died at Brighton, October 21. Mr. Woodhouse was born in London, October 21, 1855. At King's College, London, he acquired a knowledge of physical science which well qualified him for his career as an electrical engineer. Leaving college, he began his work by entering the shops of Messrs. Hunter & English, where he passed three years. In 1877 he entered the railway service, taking a position with the Great Eastern Railway Co., and afterwards with the London and Northwestern Railway Co.'s locomotive department, where he continued till early in 1881. In the summer of 1880 Mr. Woodhouse visited the United States and Canada, where he spent six months in examining engineering and scientific works. Soon after his return to England in 1881, he entered into partnership

Digitized by Google

with Mr. F. L. Rawson in the business of general electrical engineering, in which field the firm of Woodhouse & Rawson has since achieved distinguished success. Such thoroughly trained and energetic workers in the field of electrical engineering as Mr. Woodhouse can ill be spared from a vocation in which the work to be done increases faster than competent hands can be found to carry it forward.

REVISION OF THE PATENT LAW PROPOSED BY THE NATIONAL ELECTRIC LIGHT ASSOCIATION.

"The members of the National Electric Light Association, an organization of companies and individuals engaged in the electric lighting business and branches of industry collateral thereto, have felt, through sad experience, the great need of certain reforms in the patent laws of the United States, in consequence of which the following bill will be introduced into the Fiftieth Congress, and an attempt be made to secure its passage. The association would call the attention of patentees and all those who have the industrial prosperity of our country at heart to aid them, in this effort, to put our patent system on a footing which will secure the beneficient results, of which such a system properly organized and administered is capable."

J. F. MORRISON,
President National Electric Light Association.
Brush Electric Light Co. of Baltimore.
FRANK RIDLON,
Sun Electric Light Co., Woburn, Mass.
F. J. SPRAGUE,
Sprague Electric Railway and Motor Co., N. Y.
WALTER C. KERR,
Westinghouse, Church, Kerr & Co., N. Y.
ARTHUR STEUART,
General Counsel National Electric Light Ass'n.
CHAIRMAN
COMMITTEE ON LEGISLATION.

A BILL CREATING A COMMISSION TO EXAMINE AND REPORT TO CONGRESS NEEDFUL REFORMS IN THE PATENT LAW.

Whereas, The Patent Laws of the United States are deemed to be in such a condition as to require revision; therefore,

Be it enacted, by the Senate and House of Representatives of the United States, in Congress assembled:

Section 1. That a commission be, and the same is hereby created, to consist of three suitable persons to be appointed by the President of the United States, who shall hold office until a final report of this commission is submitted to and accepted by Congress, and who shall receive for their service a compensation of $5,000 each per annum.

Sec. 2. It shall be the duty of this commission to examine thoroughly the patent laws of the United States, and those of other countries, and their practical operation and effect, in meeting the needs of the public and fulfilling the purposes for which they were created; to formulate a report to be submitted to Congress which shall set forth the results of this investigation and their conclusions therefrom, with reference to changes in, or additions to, the present law, pertaining to patents. The report shall also contain a draft of an act which will provide for the changes found necessary by the investigations of the commission.

Sec. 3. The commission is authorized to employ such clerical force as may be necessary for the proper conduct of its work and to incur such other expenses for stationery, printing, etc., as may be found expedient.

Sec. 4. The salaries of the members of this commission as well as all expenses legitimately incident to its work, shall be paid from the surplus in the United States Treasury to the credit of the patent office. All expenditures by or for said commission, other than the salaries of the members, shall, however, be under the control of and authorized by the Secretary of the Interior.

TELEGRAPHING TO AND FROM MOVING TRAINS.

The induction telegraph with which the Lehigh Valley railroad has been equipped by the Consolidated Railway Telegraph Co. as far as Easton, has proved completely successful. An exhibition of its operation was made October 6th to a large party of gentlemen interested in electrical and railroad work, who were invited to make a trip to Easton and return, by the Consolidated Railway Telegraph Co. During the trip some 400 telegrams were sent and received to and from New York and other points, and an opportunity was afforded to all the guests to inspect the apparatus and witness its operation. The system has been described heretofore in various journals. The entire transmitting apparatus has been so simplified and condensed as to be mounted on a lap-tablet, including space for message blanks. On the occasion of the excursion an extra receiving telephone was provided for the use of the guests, of whom all who were familiar with Morse signals were surprised and delighted by the distinctness of the signals. The system has now been in regular use on the Lehigh Valley road nearly six months, and there is no longer any doubt of its entire practicability.

A PERMANENT TECHNICAL EXHIBITION AT ST. PETERSBURG.

The Association of Engineers of Ways and Communication of St. Petersburg, have issued a prospectus for a permanent technical exhibition in the Russian capital, open to exhibitors in any part of the world, and including exhibits classified as follows:

1. Machines, implements, tools, apparatus, etc., having connection with any branch of engineering.
2. Samples of building material.
3. Models, drawings, technical books, pamphlets, etc.

For the space occupied the exhibitor is charged at the following rates: One square foot, 20 roubles a year; two square feet, 35 roubles a year; three square feet, 45 roubles a year; four square feet, 30 roubles a year; and for every square foot exceeding, five roubles a year is charged extra, payable in advance for six months. The models and plans of new inventions occupying not more than two square feet, will be admitted gratis for the period of two months.

In order that the exhibition may serve as a useful medium between the exhibitor and the visitor of the exhibition, the administration will give to all inquiries its full attention, but they must be in writing, and relating to engineering and its kindred branches.

The administration will issue lists, drawings, etc., indicating latest improvements in all branches known to the administration, and, at the same time, execute orders on rates of regular commission houses. The exhibition objects will have to be provided with detailed descriptions indicating their use, or be described by catalogue, including selling prices if to be sold.

Persons visiting the exhibition can have all the information desired by applying to the superintendent, who will always be present during the hours in which the exhibition is open to visitors.

The electric section of the association gives especial attention to telegraphs, railroad signals, bells, telephones and electric lighting.

A. Warschawsky, 14 Dey street, New York, the general agent for North and South America, is prepared to furnish full information to intending exhibitors or others.

TELEPHONE EXCHANGE STATISTICS.

The report of the secretary, at the meeting of the National Telephone Association, at Pittsburgh, Sept. 26, on exchange statistics showed that of exchange subscribers New York had 6,881; Chicago, 4,577; Brooklyn, 3,297; Boston, 2,130; Baltimore, 2,105; Philadelphia, 2,420; Pittsburgh, 2,286; Providence, 2,417; Washington, 1,362; Buffalo, 1,767; Detroit, 2,585; Cincinnati, 2.900; Milwaukee, 1,732; Minneapolis, 1.387; Louisville, 1,661; St. Paul, 1,025; New Orleans, 1,148; New Haven, 1,227; Albany, 1,258. No figures were obtained from Kansas City, San Francisco, and a few other large cities. New York, it appeared, had just doubled its subscribers since 1882, and in this respect is nearly paralleled by Chicago. The number of daily exchange connections in New York is 84,750; Chicago, 44,292; Cincinnati, 45,000; Detroit, 33,146; Brooklyn, 17,508; Boston, 17,345; Baltimore, 19,275; Philadelphia, 17,098; Pittsburgh, 18,492; Minneapolis, 16,000. The daily calls per subscriber average in New York, 12.3; in Cincinnati, 15.5; Richmond, 12.9; Detroit, 12.8; East Saginaw, 13.0; Minneapolis, 15.5. The number for New York last year was only 6.5, indicating an increase of work for the exchange, per subscriber, of nearly 100 per cent. The number of subscribers' wires per operator was 157 in New Orleans; 84 in New York; 84 in Richmond; 95 in Boston; 98 in Baltimore; 80 in Washington. New York had 755 trunk lines; Chicago, 369; Boston, 213; Brooklyn, 221; Cincinnati, 260; Jersey City, 69; Pittsburgh, 78; Providence, 39. New York showed a gain of 155 trunk lines over 1886. New York had 43 daily connections per trunk; Detroit, 155; Reading, 76; Worcester, 80; Louisville, 40; Pittsburgh, 69; Chicago, 75; Williamsport, 48. In the matter of exchange wires, Providence showed 322 "direct" and 675 "circuit;" St. Paul, 469 and 210; Washington, 478 and 300; Worcester, 57 and 215; Minneapolis, 579 and 281; Portland, 45 and 316; Hartford, 176 and 193; New York, 6,842 and 8; Philadelphia, 1,897 and 132; Baltimore, 1,078 and 372. The cost of one connection in New York was .0078; in Philadelphia, .0037; in Brooklyn, .0041; in Chicago, .0040; in Denver, .0055; in Washington, .0037; in New Orleans, .0018; in Minneapolis, .0016.

GAS ENGINES EMPLOYED IN A CENTRAL STATION PLANT.

At Spencer, Mass., a Ball arc-light plant of 60 lamps is run entirely by gas engines. Three Otto engines, of 15 nominal h. p. each, are used. The plant is owned and operated by the Spencer Gas Co., who thus manage to keep the business of lighting the town, while utilizing their own product. Very favorable reports are made of the successful and economical performance of the system at Spencer.

Digitized by Google

ELECTRIC LIGHT AND POWER.

List of Edison Central Station Illuminating Companies in the United States, June, 1887.

The following table shows how rapid is the growth of central station incandescent lighting. It is but little over five years since the first Edison station was installed.

	CITY OR TOWN.	STATE.	NO. OF LAMPS.
1.	New York	New York	15,000
2.	Roselle	New Jersey	2,000
3.	Lawrence	Massachusetts	4,900
4.	Brockton	Massachusetts	3,200
5.	Shamokin	Pennsylvania	2,400
6.	Sunbury	Pennsylvania	1,600
7.	Fall River	Massachusetts	4,000
8.	Newburgh	New York	4,000
9.	Tiffin	Ohio	2,300
10.	Hazleton	Pennsylvania	2,300
11.	Williamsport	Pennsylvania	4,000
12.	Mount Carmel	Pennsylvania	800
13.	Middletown	Ohio	1,500
14.	Piqua	Ohio	1,800
15.	Bellefonte	Pennsylvania	2,100
16.	Circleville	Ohio	1,500
17.	Appleton	Wisconsin	1,600
18.	Cumberland	Maryland	2,800
19.	Ashland	Pennsylvania	2,000
20.	Des Moines	Iowa	3,200
21.	Harrisburg	Pennsylvania	6,300
22.	Lockport	New York	700
23.	York	Pennsylvania	2,400
24.	Little Falls	New York	800
25.	West Chester	Pennsylvania	3,500
26.	Tamaqua	Pennsylvania	2,000
27.	MacKeesport	Pennsylvania	1,600
28.	New Brunswick	New Jersey	4,000
29.	New Bedford	Massachusetts	3,200
30.	Johnstown	Pennsylvania	2,800
31.	Wilmington	Delaware	1,000
32.	Reading	Pennsylvania	1,600
33.	Chester	Pennsylvania	3,500
34.	Lebanon	Pennsylvania	1,000
35.	Jackson	Michigan	4,000
36.	Erie	Pennsylvania	4,000
37.	Boston	Massachusetts	9,000
38.	Detroit	Michigan	10,000
39.	Atlantic City	New Jersey	2,200
40.	Topeka	Kansas	4,800
41.	Amsterdam	New York	1,600
42.	Wayne	Pennsylvania	800
43.	Laramie City	Wyoming Territory	3,300
44.	Rochester	New York	6,000
45.	Lancaster	Pennsylvania	4,000
46.	Wilkesbarre	Pennsylvania	3,000
47.	Altoona	Pennsylvania	3,000
48.	Scranton	Pennsylvania	3,000
49.	Elgin	Iowa	600
50.	Boone	Illinois	3,500
51.	Rockford	Illinois	1,600
52.	Oskaloosa	Iowa	1,500
53.	Ottumwa	Iowa	800
54.	Neenah	Wisconsin	600
55.	Broadhead	Wisconsin	600
56.	Neilsville	Wisconsin	600
57.	New Orleans	Louisiana	10,000
58.	Abilene	Kansas	1,200
59.	Hutchinson	Kansas	1,900
60.	Rutland	Vermont	800
61.	Norristown	Pennsylvania	800
62.	Cincinnati	Ohio	2,700
63.	St. Paul	Minnesota	10,000
64.	Portland	Oregon	600
65.	Seattle	Washington Territory	500
66.	Baldwinsvill	New York	1,000
67.	Dallas	Texas	500
68.	Muncie	Indiana	700
69.	Bellows Falls	Vermont	600
70.	Renova	Pennsylvania	1,500
71.	Palestine	Texas	600
72.	Tacoma	Washington Territory	600
73.	Spokane Falls	Washington Territory	600
74.	Dayton	Ohio	3,200
75.	Hamilton	Ohio	1,600
76.	Birmingham	Alabama	3,600
77.	Waterbury	Connecticut	600
78.	Bristol	Connecticut	400
79.	Chicago	Illinois	15,000
80.	Philadelphia	Pennsylvania	10,000
81.	Brooklyn	New York	10,000
82.	Albany	New York	8,000
83.	Columbus	Ohio	6,000
84.	Washington	D. C.	6,000
85.	Boston, 2d district.	Mass	5,000
86.	New York, 2d district.	New York	10,000
87.	New York, 3d "	New York	8,000
88.	New York, 4th "	New York	8,000
89.	Grand Rapids	Michigan	5,000
90.	Kansas City	Missouri	4,000
91.	Mobile	Alabama	3,000
92.	La Crosse	Wisconsin	2,000
93.	Woburn	Massachusetts	1,000
94.	Leadville	Colorado	800
95.	Austin	Texas	400
96.	Barabo	Wisconsin	300
97.	Hudson	Wisconsin	300
98.	Olney	Illinois	500
99.	Winona	Minnesota	600
100.	Palestine	Texas	600
101.	Victoria	British Columbia	500
102.	Vancouver	British Columbia	800
103.	Brandon	Manitoba	600
			313,300

THE ORLANDO GAS AND ELECTRIC LIGHT CO. will erect an electric light plant at Orlando, Fla.

THE SPENCER (MASS.) GAS CO. has placed in its works three 15 h. p. gas engines, with which it intends running its electric light plant.

THE DULUTH ELECTRIC LIGHT CO. has increased its capital stock $50,000. A new building to cost $5,000 will be put up. The plant will be increased to 175 2,000 c. p. lights; a new 150 h. p. Corliss engine will be put in, and two new dynamos added. A $20,000 addition to the City Hotel will be built.

THE KENSINGTON ELECTRIC LIGHT CO., Kensington, Ill., has been incorporated, with a capital of $20,000. Messrs. Wm. Birdsall, W. B. Williams, Erastus Gates, Jas. O'Brien and Jno. Beaton, are named as corporators.

THE HAUSS ELECTRIC LIGHT CO. will erect an electric light plant at Chattanooga, Tenn.

THE CHICOPEE ELECTRIC LIGHT CO. will erect an electric light plant at Chicopee, Mass.

THE NEW ALBANY ELECTRIC LIGHT AND POWER CO., New Albany, Ind., expect to put in a $40,000 electric lighting plant.

Foreign.

Germany.—The work in connection with the extension of the supply from the central electric light station known as the Städtische Elektricitätswerke in Berlin is rapidly approaching completion. The Royal Theatre has just been fitted with 1,500 glow lamps, which are supplied from the mains of that station, and the Royal Opera House is now receiving an installation of glow lamps, so as to be ready for the coming season. The total area at present supplied from the station is approximately a square of 1,600 feet sides, but further extensions are contemplated. The distributing plant has been put down in a most substantial manner. Briefly described, it consists of a network of mains, various points of which are joined to the station by feeders. These junctions are placed in special cast iron feeding boxes, and in addition to these there is a large number of distributing boxes where the service wires to the different houses are joined to the mains. The sectional area of the main conductors varies between .24 and 1.4 square inch. The cables are all lead covered, with an outside serving of iron tape for greater protection; and in places where special precautions are necessary, such as street crossings, or in the neighborhood of gas and water pipes, the cables are drawn through iron tubes. Where the streets are straight and of sufficient width the different cables have been laid side by side; but where sufficient space could not be found they are arranged above each other, with wood distance pieces between them. This somewhat elaborate system of underground street mains, says *Industries*, although rather costly, has the advantage of equalizing the potential throughout the district, and of permitting easy access for purposes of repair or the connection of new subscribers. In order to distinguish the cables at any place each has been wrapped round at every 7 feet run with a short length of lead tape bearing a distinctive stamped mark.

Digitized by Google

ELECTRIC RAILWAYS IN AMERICA.

Now in Operation.

APPLETON, WIS.—Appleton Electric Street Railway; overhead conductor, 4½ miles, 5 motor cars. Van Depoele system.
ASBURY PARK, N. J.—Sea Shore Electric Railway; overhead conductors, 4 miles. Daft system.
BALTIMORE, MD.—Union Passenger Railway Co.; overhead conductor. Daft system.
BINGHAMTON, N. Y.—Washington Street and State Asylum Electric R. R.; overhead conductor, 5½ miles. Van Depoele system.
DENVER, COL.—Denver Tramway Co.; conduit, 4 miles. Short-Nesmith series system.
DETROIT, MICH.—Detroit Electric Railway Co.; overhead conductor, 2 miles, 4 motor cars. Van Depoele system. Highland Park Railway Co.; overhead conductors, 3 miles, 2 motor cars.
GRATIOT, MICH.—Gratiot Electric Railway Co.; overhead conductor, 1 motor car. Van Depoele system.
KANSAS CITY, MO.—Kansas City Electric Railway Co. Henry system.
LIMA, O.—Lima Street Railway Motor and Power Co.; overhead conductor, 6¼ miles, 7 motor cars. Van Depoele system.
LOS ANGELES, CAL.—Los Angeles Electric Railway Co.; overhead conductor, 5 miles, 4 motor cars. Daft system.
MANSFIELD, O.—Overhead conductors. Daft system.
MONTGOMERY, ALA.—Capital City Electric Street Railway Co.; overhead conductor, 11 miles, 20 motor cars. Van Depoele system.
PORT HURON, MICH.—Port Huron Electric Railway Co.; overhead conductors, 2¾ miles, 3 motor cars. Van Depoele system.
ST. CATHERINES, ONT.—Overhead Conductor, 6 miles. Van Depoele system.
SCRANTON, PA.—Scranton Suburban Railway Co.; overhead conductor, 2¼ miles, 3 motor cars. Van Depoele system.
WICHITA, KAN.—Wichita, Riversido and Suburban R. R. Co.; overhead conductor, 4 miles, 6 motor cars.
WINDSOR, CAN.—Windsor and Walkerville Electric Railway Co.; overhead conductor, 1½ miles, 1 motor car. Van Depoele system.
WOONSOCKET, R. I.—Woonsocket St. Railway Co.; overhead conductors.

Constructing or Under Contract.

Ansonia, Conn.
Allegheny, Pa.
Dayton, O.
Elsinore, Cal.
Harrisburg, Pa.
Ithaca, N. Y.
Jamaica, N. Y.
Lakeside, O.
Los Angeles, Cal.
Middletown, Conn.
New York, N. Y.
Pittsburg, Pa.
Richmond, Va.
San Diego, Cal.
St. Joseph, Mo.
Worcester, Mass.
Wilmington, Del.

New Roads Projected.

Alameda, Cal.
Atlanta, Ga.
Bangor, Me.
Bellevue, Pa.
Biddeford, Me.
Birmingham, Ala.
Boston, Mass.
Bridgeton, N. J.
Bayonne, N. J.
Brookline, Mass.
Brooklyn, N. Y.
Butte, Mont.
Birmingham, Ala.
Carbondale, Pa.
Chicopee, Mass.
Cincinnati, O.
Coney Island, N. Y.
Elizabeth, N. J.
Eureka, Cal.
East Cambridge, Mass.
Easton, Pa.
Framingham, Mass.
Galveston, Tex.
Flushing, N. Y.
Fort Smith, Ark.
Jersey City, N. J.
Jacksonville, Fla.
Lincoln, Neb.
Milwaukee, Wis.
Muncie, Ind.
Newark, N. J.
Newton, Mass.
Newton, Kan.
Oakland, Cal.
Ontario, Cal.
Orange, N. J.
Oswego, N. Y.
Passadena, Cal.
Philadelphia, Pa.
Plainfield, N. J.
Pensacola, Fla.
Port Chester, N. Y.
Rochester, N. Y.
Rockaway, N. Y.
Scranton, Pa.
San Francisco, Cal.
San Jose, Cal.
San Antonio, Tex.
Springfield, Mass.
St. Augustine, Fla.
St. Paul, Minn.
Tacoma, Wash. Ter.
Tiffin, O.
Winston, N. C.
Westfield, Mass.
Wooster, O.

COLUMBUS, O.—The electric railway is constructed upon the system of Prof. John H. Short, of Denver, Col., formerly of Columbus. It is called the series system, because the same current is sent through each car in succession, as is done in the arc system of electric lights. This road will be the second ever put in under this system. Two trains of cars will be run. The cars will have a carrying capacity of 120 passengers each. The speed will be about 10 miles an hour.

DAYTON (OHIO) WHITE LINE STREET RAILWAY CO.—Work was begun on this new road August 1st, and it is expected that the road will be opened by November 1st. They will use the Van Depoele system, having part overhead wires and part underground conduit. The total length of track will be 8½ miles of 4 ft. 8 in. gauge, 38 lb. rail, 16 cars, 13 motors. The capital stock of the company is $200,000, and the officers are: president, John A. McMahon; secretary, Charles D. Iddings; treasurer, Michael A. Nipgen.

BINGHAMTON, N. Y.—The electric railway on Washington street, running to the state asylum, has now been in operation about four months and has proved entirely satisfactory to the owners. The six motor cars run on an average, over 60 miles a day each. One hundred and seventy-five thousand passengers have been carried since the use of the electric motors was begun, more than twice as many as were carried by horses during a similar period. The electric outfit is from the Van Depoele company, and the managers of the road speak in high terms of their satisfaction with its performance. The road has grades as high as seven per cent. which are got over without difficulty.

ST. CATHERINES, CAN.—The St. Catherines, Merritton & Thorold Street Railway Co. ran its first electric car over its road October 5, and since that date it has run on schedule time with the horse cars without interruption. The line, of nearly six miles, follows the Welland canal closely, and is full of curves and grades. There are twenty-three grades, the steepest being 6.33 per cent., the lowest .87 per cent., averaging about 4 per cent. The road is extremely tortuous, having no less than thirty-three curves. Mr. E. A. Smyth, the president of the road, expresses his unqualified satisfaction with the performance of electricity as a motive power for street cars on his road, and expects soon to have twelve cars fully equipped and running. This road employs the Van Depoele motors and an overhead conductor, and its installation adds one more to the rapidly-growing list of street railways successfully equipped by the Van Depoele company. The railway company have built a new power station for themselves, leasing water power from the Canadian government on the Welland canal, paying them at the rate of about one dollar per horse-power per annum. They have over 400 actual h. p. at their water-wheel. Having such an abundance of power, the company have arranged to run several motors along the line for various manufacturers, so that by the first of January next it is expected that the cost of running the cars with electric power will be reduced to about 30 cents per day per car. A 100 h. p. generator is now in operation, and another is intended to be placed shortly. The motor used on the car is of 15 h. p.

THE WEST END STREET RAILWAY CO., BOSTON, MASS.—The trials of the experimental electric car, recently received from New York, have proved very satisfactory. Further tests are going forward in order to determine the most economical arrangement of the motor for the particular work required. The car will probably be put in regular passenger service on the Cambridge line early in November.

NEW INCORPORATIONS.

The Sterling Electric Light and Power Co., Sterling, Kas. Capital stock, $12,000. Jno. K. Skiles, and others, incorporators.

The Kankakee Electric Co., Kankakee, Ill. Capital stock, $10,000. William S. Reed, and others, incorporators.

The Peru Electric Light and Water Supply Co., Peru, Ill. Capital stock, $8,000. W. K. Hoagland, and others, incorporators.

The Catskill Electric Light Co., Catskill, N. Y. Capital stock, $20,000. Manly B. Mattice, and others, incorporators.

The Oneonta Electric Light and Power Co., Oneonta, N. Y. Capital stock, $15,000. Harlow E. Bundy, and others, incorporators.

The Bessemer Electric Light and Power Co., Bessemer, Ala. Capital stock, $50,000. E. A. Burke, and others, incorporators.

The Canastota Electric Light and Power Co., Canastota, N. Y. Capital stock, $10,000. W. H. Patten, and others, incorporators.

The Mauch Chunk Electric Light Co., Mauch Chunk, Pa. Capital stock, $1,500. H. W. McClure, and others, incorporators.

The East Berkeley Electric Light Co., Berkeley, Cal. Capital stock, $30,000. J. L. Barker, and others, incorporators.

The Mexico Electric Light and Power Co., Mexico, N. Y. Capital stock, $8,000. W. H. Weed, and others, incorporators.

The Sanford Light and Water Co., Sanford, Me. Capital stock, $6,000. E. M. Goodall and George H. Nowell, incorporators.

The Cambridge Electric Light and Telephone Co., Cambridge, Ohio. Capital stock, $15,000. J. C. Steele, and others, incorporators.

The Edison Electric Light Co., Salida, Col. Capital stock, $15,000. William W. Roller, and others, incorporators.

The Iron Mountain Electric Light Co., Iron Mountain, Mich. Capital stock, $25,000. Arthur D. Moore, and others, incorporators.

The Kinsley Street Railway and Electric Lighting Co., Kinsley, Kas. Capital stock, $100,000. C. A. Read, and others, incorporators.

The Fenton Electric Light Co., of Fenton, Mich. Capital stock, $10,000.

The Cooperstown Light and Power Co., Otsego, N. Y. Capital stock, $20,000. Messrs. J. W. Hult, Dudley Farlin, Charles D. Hammond, and others, are incorporators.

The Edison Illuminating Co., Orange, N. J. Capital stock, $100,000. Eugene S. Kass, and others, incorporators.

The Owego Electric Light and Motor Co., Owego, N. Y. Capital stock, $12,000. John Jones, and others, incorporators.

The Citizen's Mutual Light, Heat and Power Co. Utica, N. Y. Capital stock, $50,000. Geo. D. Dimon, and others, incorporators.

The Citizen's Electric Light and Power Co., Wellsville, Ohio. Capital stock, $20,000. E. G. Whitacre, and others, incorporators.

Digitized by Google

The Peninsular Electric Light and Power Co., Houghton, Mich., capital stock, $50,000. President, Hon. Jay A. Hubbell, secretary and treasurer Jas. B. Sturgis, general manager, Jas. R. Dee. They use the Thomson-Houston system, one 45 and three 30 light arc machines, and have 60 to 70 series incandescent lamp on the circuits.

MANUFACTURING AND TRADE NOTES.

THE WHEELER REFLECTOR CO. issue a finely illustrated catalogue of their reflectors, exhibiting forms adapted for all methods of lighting, including daylight reflectors for windows opening on alleys or very narrow passages. They show a number of patterns specially designed for electric lamps, both arc and incandescent.

CONSIDERABLE interest has been shown recently with respect to the use of the "P. & B." compounds, in several branches of elec trical work. The compound has been used for about a year for electric light plants in a good many directions, with very good results it is said. It has been used for painting mouldings in damp places, for splices on wire and for switches and cut-out boxes in damp places, and for back-boarding, The compound seems to be a good preservative against moisture. It has also been used on wire, going through brick walls, where the wire is tied to the knobs, and generally on all wood work in damp places. It is said to possess high insulating qualities, and has been used by the electrician of the N. Y. and Brooklyn Bridge for the past year for insulating the electric light wires that are run on iron poles. The Standard Paint Co., 59 Maiden Lane, who are the manufacturers of the P. & B. compounds, have received letters from other electric light companies, who have tested and used their compounds and who all speak highly of its insulating properties. It has also been found useful for coating battery jars. The compound is said to resist strong acids and alkalis, and to be thoroughly waterproof. A good waterproof and insulating paint should find large use in electrical construction.

MESSRS. SCHIEREN & CO. report sales of electric leather belting during the past week to the following parties: Natick Electric Light Co., Natick, Mass., 42 feet, 10 inches double; Skowhegan Electric Light Co., Skowhegan, Me., 29½ feet, 8 inches double; Mahoming Electric Light Co., Youngstown, O., 47 feet, 8 inches double—47 feet, 10 inches double; Portsmouth Electric Light Co., Portsmouth, N. H., 65 2-12 feet, 4 inches double; Chas. C. Clausen, New York, 62 feet, 1 inch double; Monadnock Mills, Claremont, N. H., 300 feet, 3 inches double.

THE WAINWRIGHT MANUFACTURING CO., of Boston, with works at Medford, has shipped its feed-water heaters during the month of August to the following places: two to New York city, two to Philadelphia, one each to Bangor, Me., New Britain, Conn., Newark, N. J., Summerfield, Md., Cleveland, O., Decatur, Ala., Waukesha, Wis., and St. Paul, Minn. It reports that orders and inquiries as to its specialties are constant and increasing.

THE W. L. DENIO FIRE ALARM CO., Rochester, N. Y., are making and introducing a thermostat, using a closed circuit. The thermostat consists of a strip of metal fusible at a low temperature (155° to 160°). There is an obvious advantage in using a closed circuit in any protective apparatus; its greater consumption of battery being more than counterbalanced by the greater safety due to its capacity to indicate automatically any failure of battery.

A DUPLEX AIR COMPRESSOR for Japan is included in last month's shipments of the Clayton Air Compressor Works, of Brooklyn, N. Y., whose machines are now in use in Russia, Australia, Mexico, West Indies, Spain, Canada, and most of the South American republics. For the most part, however, the sales are for use in this country, where the Clayton Air Compressors are highly appreciated by miners and contractors.

A material increase in orders is reported since these works opened an office and salesroom at 43 Dey street, New York.

THE CAMPBELL ELECTRICAL SUPPLY CO., of Boston, have appointed as their New York agents, Messrs. Knapp & Hague, No. 52 Fulton street, who are well known in this city, and they will undoubtedly secure for that company a large business in their now well-known "Line Wire."

THE PHOSPHOR-BRONZE SMELTING CO. (LIMITED), of Philadelphia, are introducing a "Phosphorized Anti-Friction Metal," for heavy pressure and high-speed bearings. It is used in the same manner as Babbitt metal, and is claimed to possess the desirable qualities of fluidity when melted, freedom from dross and shrinkage, and low specific gravity, and to fill more bearings than most other metals. It has been used for some years by several large consumers.

THE ELECTRIC LIGHT RADIATORS made by Messrs. J. Hoare & Co., Corning, N. Y., are much liked by all who have used them. Their effect upon an incandescent light is extremely beautiful. They are very attractive, particularly for use in domestic lighting.

THE GAYNOR ELECTRIC CO. has been organized and established at Louisville, Ky., for the manufacture of the "Rapid Fire Alarm and Police Signal System" and general electrical goods. They will also be dealers in general electrical supplies. The company was incorporated September 3d, 1887. The directors are, Chas. R. Long, John J. Barret, Thos. F. Gaynor, Jno. H. Sutcliff and C. A. Warren.

THE EXCELSIOR SYSTEM of Electric Lighting is on trial at Tarrytown, N. Y. Mr. Edward P. Thompson, of this city, was appointed by Mr. George Silver and other gentlemen of the town to inspect and report upon the merits of the system before its final acceptance. A favorable report has been submitted by Mr. Thompson, and it is expected that Tarrytown will continue to be lighted by electricity. Forty-four lamps are in circuit at present operating at 1,500 c.p., with a Payne & Sons' steam engine of 80 horse-power.

INVENTORS' RECORD.

Prepared expressly for THE ELECTRICIAN AND ELECTRICAL ENGINEER, *by* Pope, Edgecomb & Terry, *Solicitors of Patents for Electrical Inventions, 11 Wall Street, New York city.*

CLASSIFIED LIST OF UNITED STATES ELECTRICAL PATENTS.

From Sept. 20th to Oct. 11th, 1887 (inclusive).

Alarms and Signals:—*Fire Alarm Box*, B. S. Flanders, 370,328, September 20. *Electric Burglar Alarm*, J. B. Yeakle and A. Steuart, 370,439, September 27. *Electric Signaling Apparatus*, J. P. Tirrell, 370,831. *Fire-Damp Annunciator*, A. Berghausen, 370,851. *Fire Alarm and Police Telegraph System*, A. M. Neeper, 370,885. *Thermostat*, W. H. H. Barton, 371,121, October 4. *Electric Signaling Apparatus*, W. Glascow and S. S. Stevens, 371,445, Oct. 11.

Clocks:—*Electric Alarm Clock*, E. J. Colby, 370,932, October 4.

Conductors, Insulators, Supports and Systems:—*Underground Conduit for Electric and other Railways*, E. E. Ries, 370,283, September 20. *Electric Cable*, F. Borel, 370,528, September 27. *Subterranean Electric Line System*, G. W. LeVin, 370,955. *Conduit for Electrical Distribution*, T. Wallace, 371,111, October 4. *Insulating Clamp for Electric Conductors*, T. E. Adams, 371,161. *Electric Wire Conduit*, J. Lynch, 371,202. *Plastic Composition for Insulating Electric Wires, &c.*, W. W. Barnes, 371,406, October 11.

Distribution:—*Electrical Transmission of Power*, T. A. Edison, 370,125, 370,126, 370,127, 370,128, 370,129, 370,130, and 370,131, September 20. *System of Electrical Distribution*, F. A. Wessel, 370,434. *Regulating Device for Alternate Current Circuits*, E. Thomson, 370,573, September 27.

Dynamos and Motors:—*Dynamo-Electric Machine*, W. Lahmeyer, 370,794, October 4. *Method of, and Apparatus for Starting Electric Motors*, L. Daft, 371,436. *Reversing Mechanism for Electric Motors*, F. E. Fisher, 371,443, October 11.

Galvanic Batteries:—*Primary Battery*, M. Bailey and J. Warner, 371,244, October 11.

Ignition:—*Electric Gas-Lighter*, J. J. McGowen, 370,801, October 4.

Lamps and Appurtenances:—*Signal and Pyrotechnic Electric Light*, A. C. Ferguson, 370,052. *Manufacture of Filaments for Incandescing Electric Lights*, T. A. Edison, 370,124, September 20. *Electric Lamp*, J. J. Skinner, 370,423 and 370,424. *Electric Arc Lamp*, E. Thomson and E. W. Rice, Jr., 370,572, September 27. *Process of Treating Electric Light Filaments*, E. P. Thompson, 370,992. *Incandescent Electric Lamp*, same, 370,993. *Process of Manufacturing Filaments for Incandescent Electric Lamps*, same, 370,995. *Process of Evacuating Globes for Incandescent Electric Lamps*, same, 370,994 and 370,996. *Method of Evacuating Incandescent Electric Lamps*, same, 370,997. *Process of Forming Filaments for Incandescent Electric Lamps*, same 370,998. *Manufacture of Incandescent Electric Lamps*, same, 370,999. *Process of Bending Filaments for Incandescent Electric Lamps*, same, 371,000. *Process of Treating Filaments for Incandescent Electric Lamps*, same, 371,001 and 371,002. *Incandescent Electric Lamp*, same, 371,003, October 4.

Measurement:—*Electric Meter*, T. A. Edison, 370,123, September 20.

Medical and Surgical:—*Voltaic Inner Sole*, G. A. Fullerton, 371,189. *Electric Therapeutic Belt*, W. L. L. Pierce and W. J. Pierce, 371,356, October 11.

Metallurgy:—*Process of Separating Metals from their Ores*, D. W. Birmingham, 370,366, September 20. *Amalgamator*, J. A. Sperry, 371,523, October 11.

Miscellaneous:—*Electric Welding and Tempering Metals*, E. E. Ries, 370,282, September 20. *Fusible Link for Automatic Fire-Extinguishers*, O. B. Hall, 370,390. *Electric Speed Regulator for Revolving Motors*, F. Van Rysselberghe, 370,575. *Apparatus for Wiping Metal-Coated Wire*. C. E. Matteson, 370,710, September 27. *Electric Spinning or Twisting Machine*, A. S. Kimball and G. L. Brownell, 371,199. *Process of Coating Iron with Tin or its Alloys or other Metals*. E. I. Braddock, 371,248. *Apparatus for Forming Sheet Metal by Electro-Deposition*, E. Emerson, 371,256. *Apparatus for the Transmission of Electrical Energy*. G. Kornmuller, 371,331. *Galvanic* Ring, H. N. Rowell, 371,521. *Induction Coil*, E. Smith, 371,524, October 11.

Railways and Appliances:—*Electric Attachment for Locomotives*, N. F. Chase, 370,243, September 20. *Coupling for Electro-Pneumatic Brake System*, J. F. Carpenter, 370,605, September 27. *Electric Car-Brake*, W. M. Schlesinger, 370,894. *Railway Signal*, P. Milroy, 371,147, October 4. *Electric Locomotion*, L. Daft, 371,253, October 11.

Storage Batteries:—*Secondary Battery*, O. C. Flick, 370,134, September 20. A. Reckenzaun, 371,358, October 11.

Telegraphs:—*Telegraphy*, T. A. Edison, 370,132. *Printing Telegraph*, R. J. Sheehy, 370,357, September 20. *Repeater for Harmonic Telegraphs*, F. Van Rysselberghe, 370,576. *Phono-Multiple Telegraphy*, same, 370,577. *Printing Telegraph*, S. D. Field, 370,691, September 27. *Telegraph Receiver*, Charles Selden, 370,808. *Printing Telegraph*, R. J. Sheehy, 370,978, October 4. *Method of Operating with Electrical Conductors*, J. E. Watson, 371,531, October 11.

Telephones, Systems and Apparatus:—*Adjustable Support and Automatic Switch for Telephones*, S. P. Jermain, 370,193. *Auditory Transmitter for Telephones*, M. H. Allison, 370,240. *Telephone System*, F. C. Watkins, 370,293, September 20. *Telephone*, H. V. Hayes, 370,477, September 27. *Resonant Attachment for Telephones*, E. A. Balloch, 370,847, October 4. *Telephone System and Apparatus*, G. T. Woods, 371,241. *Telephone Switch*. W. M. Goodridge, 371,260. *Mechanical Telephone*, W. H. Eastman, 371,439, October 11.

Digitized by Google

THE ELECTRICIAN
AND
ELECTRICAL ENGINEER.

Conducted by F. L. POPE. G. M. PHELPS, JR., Associate Editor.

PUBLISHED MONTHLY BY

THE ELECTRICAL PUBLISHING CO.,

115 Nassau Street, New York city.

European Agent, F. H. WEBB, 4, The Sanctuary, Westminster, London, S.W., Eng.

TERMS OF SUBSCRIPTION.

United States and Canada, - -	per annum,	$3.00
Four or more Copies, in Clubs (each) - - -	"	2.50
One Copy, Four Months, - - - - -		1.00
Great Britain and other Foreign Countries within the Postal Union	"	4.00
Single Copies, - - - - - - - -		.25

[*Entered at the Post Office at New York, N. Y., as second class mail matter.*]

EDITORIAL ANNOUNCEMENTS.

Addresses.—*Business letters should be addressed and drafts, checks and post-office orders made payable to the order of the* ELECTRICAL PUBLISHING CO. *Communications for the attention of the editors should be addressed,* EDITOR OF THE ELECTRICIAN AND ELECTRICAL ENGINEER, 115 *Nassau Street, New York city.*

Communications *suitable for our columns will be welcomed from any quarter. Discussions of subjects relating to all branches of electro-technical work, by persons practically acquainted with them, are especially desired. Unavailable and rejected manuscripts will be returned only when accompanied by the necessary postage.*

Advertisements.—*We can entertain no proposition to publish anything for pay, or in consideration of advertising patronage, except in our advertising columns. Our editorial columns will express our own opinions only, and we shall present in other columns only such matter as we consider of interest or value to our readers.*

NEW YORK, DECEMBER, 1887.

Beginning with the number for January, 1888, *the double title of* THE ELECTRICIAN AND ELECTRICAL ENGINEER, *will be discontinued, and the Journal will appear under the single title,* **THE ELECTRICAL ENGINEER.** *A whiter paper will be used for the letter-press, and the cover will be of a more agreeable color than at present. It is believed that these changes will be acceptable to subscribers and readers.*

PATENT OFFICE REFORM.

WHILE approving entirely the specific reforms sought in the administration of the patent law and the practice of the Patent Office as formulated by Mr. Arthur Steuart, chairman of the legal committee of the National Electric Light Association at the meetings of that body in February and August last (see THE ELECTRICIAN AND ELECTRICAL ENGINEER, March and September) and more fully set forth in the pamphlet recently issued by the Association, we are constrained to doubt seriously the wisdom of introducing to Congress the bill, prepared and published by the Electric Light Association, to create a commission for the general revision of the patent law. The text of the proposed bill was published in our November issue. Its passage through Congress would throw open for consideration and revision the entire patent system of the country. Right here lies our doubt as to the wisdom of presenting the bill to Congress. Neither the time nor the public temper seem favorable to a result desirable for the best interests of the industrial community. The presidential election will occupy in large measure the attention of congressmen and senators during the coming year. Such periods are not usually conducive to sober, rational and intelligent consideration of measures so important and complicated as a revision of the patent law. Probably no feature of the national polity is less understood, in its legal basis and its practical conduct, by the general public, or even by the average member of Congress, than the patent system There is a somewhat widespread popular impression, shared by many who have no excuse for not knowing better, that a patent is a sort of prize or bonus, bestowed as a reward by the government upon certain more or less meritorious persons, in recognition of their inventive faculty, and by virtue of which they levy tribute on their less fortunate countrymen. The fundamental principle of the patent law—clearly set forth in the constitutional provision on which the whole system is based,—to wit,—an equitable, or at least, an expedient contract between the public and the inventor, founded on an exchange of benefits, has made its way but feebly into popular apprehension. Neither has the general public an adequate conception of the large part performed by the patent system in the industrial development of the United States, much of which comes home to everybody in the comforts and conveniences of daily life. There is a well marked tendency in many quarters, particularly among people whose thought, or want of thought, is tinctured with the granger influence of the West, to regard the patent system as chiefly a support for oppressive monopoly, and to attack it on every occasion. Whether or no such feeling has been justly aroused in particular instances is not relevant to our present subject, *i. e.*, the wisdom of submitting a revision of the entire patent law to the Congress about to convene. That such a feeling of hostility to patents exists, although chiefly founded on unreason or misapprehension, is very certain; and that many members of Congress will be peculiarly amenable to its influence under the political condition of the coming year seems not less certain. Moreover, to not a few attentive observers there has appeared in United States Supreme Court decisions in recent patent causes, an inclination to minimize the efficiency and scope of patent protection.

These considerations call for very careful attention on the part of those who seek improvement in the patent system, and suggests very grave doubts of the expediency of pressing such a measure as that proposed by the National Electric Light Association.

The specific reforms advocated by the Association and sought to be incorporated in a revision of the patent law by the proposed commission are substantially as follows:—

A thorough preliminary training and a secure tenure of office for examiners, thus securing greater efficiency and immunity from political influence.

Occupancy of the entire Patent Office building by the department from which it takes its name, thus providing adequate space for the business of the office.

The establishment and maintenance of a properly equipped laboratory for experimental demonstration of the operativeness and utility of inventions.

The setting up of a court, within the Patent Office, to

Digitized by Google

have the jurisdiction at present distributed between the Board of Examiners in Chief, the Examiner of Interferences and the Commissioner of Patents—thus relieving the commissioner entirely, and the examiners in part, of judicial functions, and providing also a court before which many questions that now come before the United States Circuit Courts could be determined.

These changes in organization and practice would unquestionably result in greater efficiency and uniformity in conducting the business of the Patent Office, and so redound to the advantage of inventors and of industrial enterprises based upon patent protection ;—but, is it reasonable to expect their accomplishment through a congressional commission for a general overhauling of the patent law and practice?—We fear not. We are not unmindful that our present views on this topic may seem inconsistent with our brief commendation of the action of the Electric Light Association in our November issue, but we aim less at consistency than at the expression of our strongest convictions on a subject so important as that now under consideration. We believe there is good reason for apprehension that the creation of a commissioner to revise the entire patent system, will invite the attack of prejudice and ignorance upon the system as a whole ; attacks which under present political conditions are likely to enlist the co-operation of many politicians, in and out of Congress, and that the result might prove to be a material impairment of the efficacy and scope of the patent system in developing the industries of the country, and securing compensation to meritorious inventors.

Reform of the tariff on imports by commission has fared but ill at the hands of Congress. Is there any reason to expect less abortive results in the case of the patent system? The latter is a subject of greater difficulty and complexity than the former, and is quite as closely, if not more closely, related to the industrial interests of the land ; yet it is less clearly understood in both theory and practice than is the tariff. There is a sort of mystery about it in popular imagination, something magical, that creates a fortune for the individual lucky enough to get the seal of the Patent Office upon his invention. Probably few persons instructed by experience, study or observation in the working of the United States patent system, and realizing the extent to which it has stimulated the discovery and application of new principles and improvement in the useful arts, upon which all our industry is based, would approve any fundamental changes in the patent law. There seems to us to be danger of such changes in opening the question of a general revision.

STREET-RAILWAY TRACTION IN NEW YORK.

It is authoritatively announced that the Third Avenue Surface Railroad Co. has definitely determined to commence the work of putting in a cable traction system, for operating its street-car line between the City Hall and Harlem bridge, as soon as the courts have decided that it may lawfully do so. The estimated cost of the cable plant, which we understand is to be similar to that now in use upon the Tenth avenue line of the same company, is stated to be $1,500,000.

This determination upon the part of the management of such an important street railway line, will doubtless cause some little surprise in electrical circles, especially in view of the rapid advance which has been made during the past year or two in the application of electricity to this class of traffic. Yet upon consideration, it is difficult to see how any other conclusion could have been reached, in view of the fact that it was apparently necessary that some decision should be reached at once. While no well informed electrical engineer has any doubt that it is entirly feasible to construct and maintain an electric plant of the dimensions required in the present case for less than one-half the sum which will have to be expended upon the cable, yet, at present, it cannot be said that there exists a single electrical establishment in this country, which could be depended upon to undertake the work of furnishing equipment for such a line as the Third avenue, for a fixed sum and to be delivered within a fixed time, and to guarantee its successful and satisfactory operation. Hence it is not to be wondered at, that the Third avenue company, having an enormous and practically constant traffic which has outgrown its present facilities, and a line nearly eight miles in length, with almost no curvature—conditions most favorable for the economical application of cable traction—should prefer to adopt it, especially as responsible engineering firms stand ready at any moment to undertake the work.

Nevertheless, we venture the prediction, that within five years, the managers of the Third avenue company will have cause to regret the decision, which under existing circumstances, it has practically been forced to make. It would hardly afford the Third avenue people much gratification to see a parallel line doing the same or even better work with a plant whose first cost and operating expenses were not more than one-half that of their own. Yet the probability that this will come to pass within a very few years is so great that it practically amounts to a certainty. The notion which prevails in some quarters, that electricity is less economical when employed on a large scale than on a small one, is an utter fallacy, and should not find credence for a moment among capable electricians. The cable traction system in practice is a vast improvement over horse-power, a remarkable triumph of mechanical ingenuity and constructive ability ; but it is not the final solution of the street railway problem, except under very special conditions, such for example as those which exist in San Francisco or Kansas City. As our English cousins would say, it is simply a question of *£. s. d.*, and from this point of view the ultimate result cannot be doubtful.

Those people—perhaps a considerable class—who like a brand new dramatic poem with their matutinal eggs and coffee were doubtless made happy by the recent journalistic enterprise of the New York *Times* in having Mr. Swinburne's poem cabled from London entire over night, and printing it next morning in its news columns. The not inconsiderable number of plain people who are accustomed to finding the morning's news in the leading pages of their newspaper, and who prefer their dramatic poetry in fair type and good paper before the evening fireside, may have felt somewhat aggrieved, not to say defrauded, on taking up the issue of the *Times* with "Locrine" spread over its first two pages. But the *Times* "beat" its contemporaries—none of them had the poem in its columns. It does not matter in the least whether or no many people wanted to read it ; and herein lies the solace for such honest folk as permitted themselves to feel swindled, and were perhaps tempted to profanity, by the exploit of the *Times*. If they will only bear in mind that the "journalism" of the day consists in large part in devising and executing "beats" on one's neighbors, they will suppress their annoyance and join in the felicitations which the *Times* has been bestowing upon itself and the Western Union Telegraph Co. since its noteworthy feat.

Digitized by Google

ARTICLES.

TRANSMITTING SPEECH BY INTERRUPTED ELECTRICAL CURRENTS.

BY C. J. KINTNER.

(Late Principal Examiner Class of Electricity, U. S. Patent Office.)

PERHAPS no better apparatus exists or will ever be devised for demonstrating the absolute correctness of Professor Bell's undulatory or wave theory than the instruments which bear his name and are so largely in public use to-day.

Two of these instruments connected in a metallic or all-wire circuit act respectively as a magneto generator and a magneto motor; the one setting in motion when spoken to currents of an alternating nature varying in volume, and the other responding to them so that its diaphragm correctly reproduces speech to the listener.

If, therefore, we analyze the action of the transmitting diaphragm we have the substantial action of its fellow at the receiving station; the vibrations being, however, diminished copies of those made by the transmitting diaphragm. If a pure musical tone entirely free from harmonics be uttered into the transmitter, the diaphragm will vibrate in such manner that the excursions from front to rear will be described in equal times, there being no irregular changes of velocity during any part of the excursion. This action gives a wave curve of regular rise and fall with equal distances between the wave crests. With such a tone, there are two, and only two dead points during each complete vibration of the diaphragm, but at each of these dead points the current on the line is nil, and a reversal takes place in each instance after said points are passed.

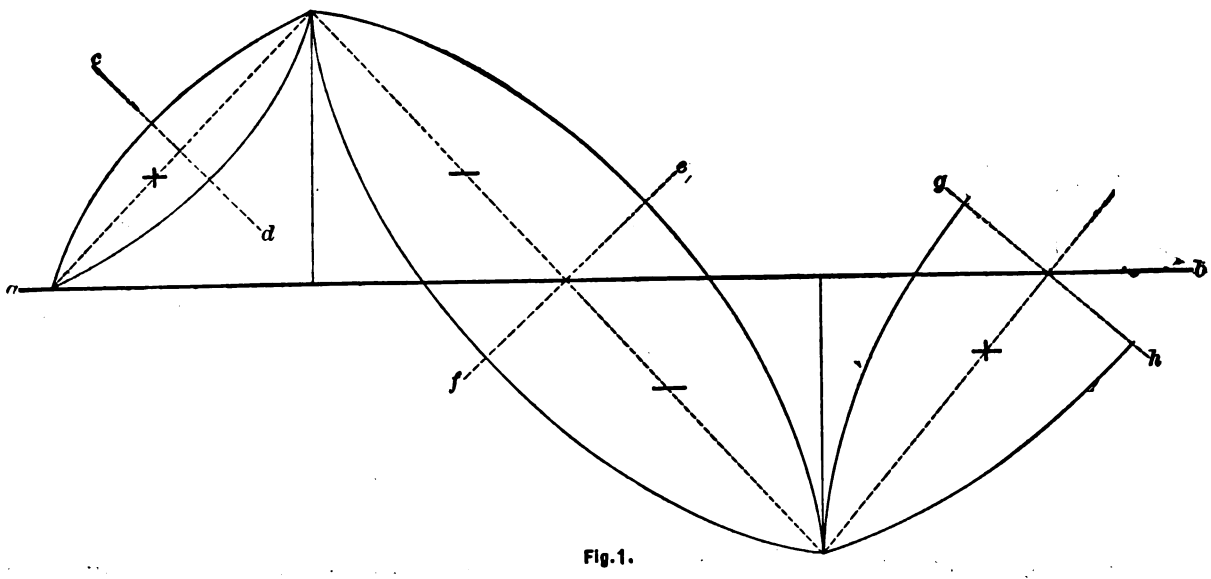

Fig. 1.

Figure 1 represents graphically the form of such waves and the volume of current flowing during any particular phase of the diaphragm; $a\ b$ being the medial line or position of the diaphragm at rest, plus currents appearing for the advance of the diaphragm, and minus currents for the retraction. The volume of current varies regularly from dead point to dead point, and has maximum values at $+\ c\ d$; $-\ e\ f$ and $+\ g\ h$. These currents may be represented algebraically by the following equation:—

$$c = \frac{V t}{d^2}.$$

Where v is the velocity of the diaphragm; t, the time elapsed since the diaphragm passed the medial line, and d the distance of the diaphragm from the core of the magnet at any point of its excursion. But v may be assumed to be constant for any interval of time, since the power due to this particular sound wave is a constant so that the velocity tends to be of a constantly accelerated nature, but is in fact opposed by a constantly increasing power in the opposition of the diaphragm under its increasing elastic stress. This equation shows that the current is nil at the start and that there is generated during the advance of the diaphragm, a plus current of constantly increasing volume until the value of d has diminished sufficiently to change its volume, when it will decrease till the first dead point is reached where it is again nil. Now a reversal takes place in the motion of the diaphragm and a minus current is set up which increases in volume, until d grows sufficiently large and v sufficiently small by reason of the increased elastic strain of the diaphragm to stop such increase, after which it decreases until the second dead point is reached when the current is again nil, thus alternating gradually varying impulses are set up in the line, or more properly alternating waves, which merge into each other so gradually, that like the swinging of a clock pendulum it is impossible to ascertain just when they begin or cease. In the transmission of this pure tone actual breaks of exceedingly small duration in the flow of the current may occur at these dead points, and not materially mar the tone copied at the receiving instrument, for the reason that the vibrations have symmetrical or regular recurrence. If this had been the whole problem in the transmission of speech by electricity it would have been very simple, and Philip Reis would have solved it when he invented his musical telephone. But there is another element which enters into the problem when we come to transmit composite tones like those of the human voice. This element was the stumbling block in the path of Reis, and it was Professor Bell's magneto instrument that led him to discover it. I refer to the overtones or divisional tones into which the fundamental tones merge. These tones exist, and are detected by delicate ears as low as the fourth order. Each order necessarily complicates matters and makes the problem the more difficult, but the magneto telephone solves the whole matter by causing its diaphragm to shape or conform itself to the resultant power of the sound waves, and each overtone on the advance of the diaphragm causes it to be retarded sufficiently to reverse the direction of the current or to diminish its effect, or if of such a nature as to aid the fundamental tone, then increased volumes are added to the fundamental volumes for the smallest imaginable fractions of a second, while any overtones on recessions of the diaphragm cause corresponding retardations and reversals or advances of the diaphragm on its back vibra-

Digitized by Google

tion. In other words, the diaphragm passes from the point of absolute rest to its fundamental dead point by a succession of direct, differential direct, and differential retrograde motions due to the combined action of the fundamental tone and overtones of all the orders. By this combined action of the fundamental tones with the overtones a prevailing plus impulse of electricity is generated, which is decreased and increased materially in its volume at specified points, which I denominate the overtone dead points by the reverse and direct action of all such overtones. As a matter of fact this direct current impulse is actually overcome at some points of the diaphragm's excursion. On reverse action a similar series of effects occur giving a minus fundamental impulse aided and opposed during its progress by the direct and reverse actions of the overtones which occur on that side, that is to say, during the back action of the diaphragm due to its elastic effect. With this action of the diaphragm there is found upon the line a series of electrical waves made up of a plus fundamental current, aided or retarded as the case may be by overtone currents of various orders combined in effect; and minus fundamental waves similarly aided or retarded during the back action of the diaphragm. In one sense of the word these currents are intermittent at stated points, but it may be asked if they are intermittent, who can tell where they commence and where cease. One fact is patent: namely, that there is no apparent actual intermission, and that the current volume changes during all the phases of the diaphragm in accordance with all of the sound waves both composite and simple. Strictly speaking, Professor Bell is theoretically right in calling the electrical effects waves, for there is no positive discontinuance of current which can be detected at any time, and their rise and fall in volume and regularity are entirely analogous to those of liquid waves even though one set be plus and the other minus. In fact, in actual liquid waves we have the same positive or upward action and negative or downward action, so that the simile is not a bad one. In figure 2, I have shown the form of electrical waves due to the combined action of the fundamental and overtones, *a b* being the medial line of the diaphragm. From *a* to *c* the diaphragm is advancing under the action of a fundamental tone, but at *c* it is checked by the action of one or more reverse overtones. This combined action of the advanced fundamental tone and reverse overtones diminishes the volume of current by reason of the resultant action of the two tones, as shown by the cross-section at *x x*. From *c* to *d* an increase due to the fundamental again occurs, but at *d* the combined overtone effect reverses the direction of the diaphragm and a minus current of small volume is generated, the diaphragm going back to the point shown by the ordinate *d*2. From *d*2 to *d'* the fundamental gives an increased current volume which is aided by a positive or plus overtone at *d'*, giving an increased current as shown by the cross-section at *z z*. Similar results take place at the other points of the diaphragm's excursion, as will be seen at *f g h l j*, etc. An analysis of this figure shows that there is a gradual rise and fall in the current volume for the fundamentals not unlike that shown in figure 1, but it also shows that the overtones vary this rise and fall, sometimes increasing and sometimes decreasing the volume of current due to the fundamental. Of course the figure is not mathematically accurate in its graphical representation of the currents generated, but it is sufficiently accurate to show the correct nature of the currents generated or set up by a magneto telephone.

If the diaphragm is sufficiently delicate in the transmitter every peculiarity of the sound waves is accurately copied, and it in turn by the action described, creates or sets up electrical waves entirely similar to the sound waves. No form of contact telephone with which I am familiar will give such accurate results as these magneto instruments; because contact telephones cannot be made so delicate, and also for the reason that they act to change the volume of an existing current and must be more or less clumsy in their construction and action, while the magneto sets up only the current actually needed; the diaphragm being free to copy accurately every peculiarity of the sound waves. The nearest approach to the perfect action of the Bell instruments is found in the microphone, but even it, fails in many respects because of imperfections, such as bad contacts, irregular conductivity, sparking, dust, etc., etc.

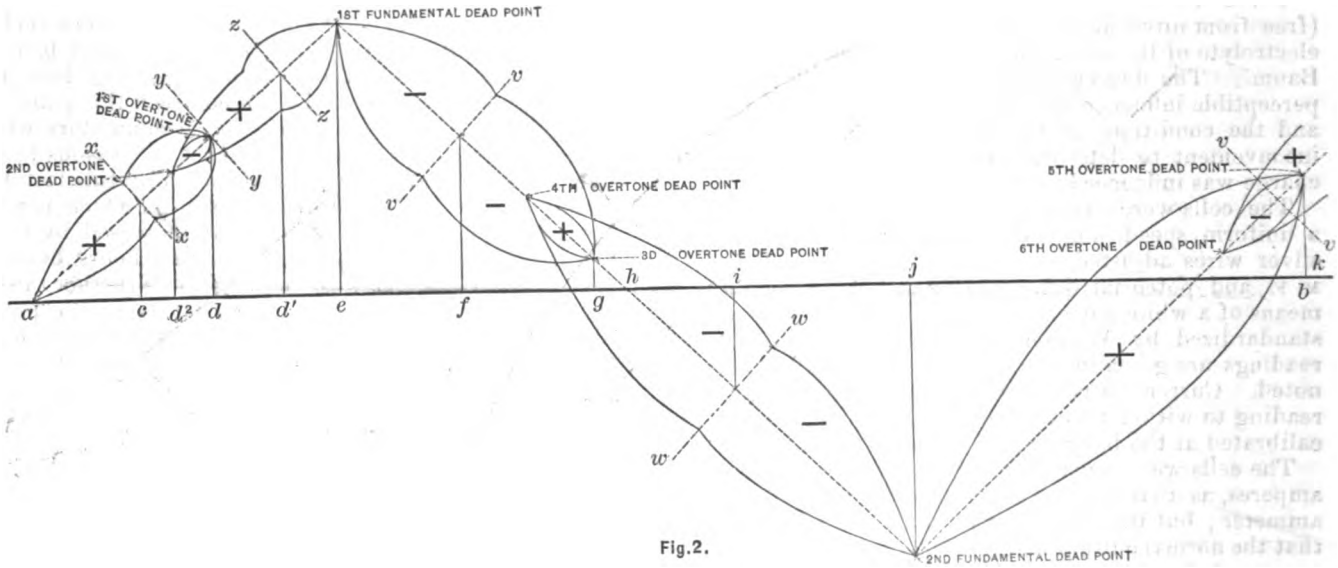
1ST FUNDAMENTAL DEAD POINT
1ST OVERTONE DEAD POINT
2ND OVERTONE DEAD POINT
4TH OVERTONE DEAD POINT
3D OVERTONE DEAD POINT
5TH OVERTONE DEAD POINT
6TH OVERTONE DEAD POINT
2ND FUNDAMENTAL DEAD POINT
a c d² d d' e f g h i j b k
z y x v w

Fig. 2.

With this discussion of Professor Bell's theory, I am prepared to pass to the problem of transmitting speech by actual impulses or breaks, and shall endeavor to show in the next article that it is entirely possible, provided the current impulses or breaks correspond to the overtones as well as the fundamentals in the voice of the speaker. I do not maintain, however, that the speech will be as pure as that transmitted by the magneto instruments, as indeed, it is not with many contact telephones now in use, but I shall show that it is still possible to transmit speech which shall serve commercial purposes and not infringe Professor Bell's 5th claim before referred to. (See ELECTRICIAN AND ELECTRICAL ENGINEER, vol. vi., No. 71, p. 451.) The method relied upon will be, by current impulses equal in volume but differing in duration in direct proportion to the fundamental and overtones combined; the instrument for executing this method being such that the electrodes shall vibrate in direct unison with the diaphragm during all its phases.

(To be continued.)

Digitized by Google

TESTS OF THE JULIEN ACCUMULATOR.

BY GEORGE B. PRESCOTT, JR.

THE following electrical measurements of the Julien accumulator, were made in order to determine its adaptability to a certain class of work, and to that end, it has been sought to ascertain with as much accuracy as possible, its precise rate of doing work, the total amount which it is capable of performing, and its efficiency under various conditions, as a transformer of energy. For this purpose I employed five of the standard cells of the following dimensions, as determined by my own measurements, viz.:

Weight of cell complete	38 lbs.
" grids and active material	27.5 lbs.
" electrolyte	4.5 "
" glass containing jar	6 "
Number of positive plates	9
Dimensions " "	$5\frac{1}{16} \times 5\frac{1}{8}$ lbs.
Active surface of positive plates	4.25 sq. feet.

Three of the above cells were furnished directly from the works, especially for this test, and the remaining two were received from the works at the same time by Mr. Weston. These latter were incorporated into this test as it was deemed that greater accuracy could be attained by the use of a larger number of cells. It is assumed, of course, that all were thoroughly formed and in prime condition.

Three of the cells were filled with dilute sulphuric acid (free from nitric acid), of the density of 15° Baumé; the electrolyte of the remaining two cells had a density of 23° Baumé. The degree of density of the electrolyte had no perceptible influence upon the E. M. F. of the accumulators, and the conditions of the test were such as to make it inconvenient to determine whether the regularity of discharge was influenced by this condition.

The cells were charged by a Weston dynamo driven at a uniform speed, and were discharged through german-silver wires adjusted to suit the required conditions. E. M. F. and potential difference (P. D.) were measured by means of a white pattern Thomson quadrant electrometer, standardized by Weston-Clark standard elements. All readings are given in legal units, and time was accurately noted. Current was measured by a magnet ammeter, reading to within two-tenths ampere, which was carefully calibrated at the beginning of the test.

The cells were never discharged at a rate exceeding 30 amperes, as that was the limit of reliable reading on the ammeter; but the general results are such as to indicate that the normal out-put of these cells should not be allowed to exceed that rate if anything like a reasonable efficiency is desired. No doubt this out-put may be momentarily increased up to 40 or 50 amperes without immediately endangering the stability of the cell, but such increase will always be obtained at a large sacrifice of its efficiency.

Five complete tests—charge and discharge—were made, the results of which are given in detail in the accompanying sheets numbered 1 to 5 inclusive, from which the general characteristics of the action of the cells—such as gradual fall in P. D., etc.—may be easily noted. The general results are recapitulated in sheet 6. The significance of these figures is so obvious that I hardly need to point out to you the general conclusions to be drawn therefrom.

The first charge was discontinued about one-half hour after gas began to be freely evolved from the cells, and the rate of charging was approximately that given by the makers, viz., 18 amperes. The discharge was maintained at about 20 amperes, and the test showed a return of nearly 70% of the total energy absorbed. The second and third tests were also made at the normal rate of charging, which was, however, carried to a higher point than in the first test, and continued for a longer period after gas began to be evolved. They were discharged at the rate of about 30 amperes, and while a somewhat greater out-put was shown over the preceding tests, the energy returned fell off to 61%. In the fourth test the charging was accomplished at the normal rate, but was continued for several hours after the evolution of gas, and until nearly 400 watt-hours of energy had been expended in each cell. The total out-put thereby obtained did not, however, exceed that of the preceding tests in which much less work had been done in charging—the efficiency falling to 54%—thereby clearly indicating that the limit of charge is not much over 300 watt-hours per cell. The out-put might be slightly increased by increasing this charge at a low rate, but under the necessary practical conditions of quick charging, any increase would be obtained at such an enormous loss that it would be, commercially, out of the question.

The fifth and last test was carried out without special regard to makers instructions, although, with the exception that the density of the current was greater, the general effects were about the same as if the cells had been charged at constant potential. The charging current was kept at 26 amperes until there was a mild evolution of hydrogen, and then gradually decreased so as to maintain the evolution of gas about constant. When the current had thus been reduced to 10 amperes it was allowed to stand at that strength until the gas began to be freely evolved, when the charge—according to my belief—having reached its economical limit, was discontinued. The evolution of gas represents the expenditure of energy, and as it is dissipated beyond the reach of recovery such evolution means direct loss, and the charge cannot be carried beyond that point without a corresponding loss in the efficiency of conversion. I have not seen this point noted in any of the numerous papers on accumulators which I have read, but I assume that it must be obvious to every one. The high efficiency of 95% shown by this last test is chiefly due to the low rate of discharge, which never exceeded 10 amperes, but was largely increased by the discontinuance of the charge at 260 watt-hours before the loss of much gas. It was, no doubt, still further raised by the cells having recovered somewhat from the previous discharge, which had been effected at a high rate, and thus an abnormally large out-put was obtained although discharged to the same potential in both cases. That is to say, when the cells are discharged at a high rate their potential falls suddenly to the normal limit. When discharged slowly the potential falls gradually to the limit. In the former case, after remaining open for a while, there is considerable recovery, as illustrated by re-discharge No. 3 (see table), whilst in the latter case there is hardly any. Therefore, it would appear that the efficiency given for test No. 5 is higher than its true efficiency, owing to an excess of residual charge that could not easily be allowed for.

The effect of lapse of time between the charging and discharging of the accumulators, could not be accurately determined without extending the tests for a considerably longer period of time. The difference in loss of efficiency between an immediate discharge and one after the lapse of 15 or 20 hours (see tests 2 and 3) is, however, very small, although if the cells are not thoroughly insulated, it might amount to considerable.

From the figures of the tests and the preceding considerations it is obvious that almost any degree of efficiency may be obtained from these accumulators. In fact, it is well known that the maximum efficiency of any accumulator is attained when the rate of charging and of discharging is a minimum; in other words, when the power expended or rate of doing work is a minimum. It is therefore necessary to adopt some standard working rate for these cells, and then determine their capacity and efficiency on the basis of this rate of working. The normal out-put of the cells should not—as already determined—exceed 30 amperes, and as the average E. M. F. of the cells is about two volts, it is obvious that the average rate of working must not exceed 60 watts per cell. At this rate

Digitized by Google

the capacity of the cells will not exceed 110 ampere-hours (see tests), and as the average P. D. during discharge is 2.03 volts, the total work done by each cell will not exceed 225 watt-hours.

Again, considering the figures of the tests, and taking into account the system of working the accumulators which you have in view, their efficiency at the above rate of working will be somewhat between 60% and 70%. For ordinary working on the assumption that abnormally large discharges will be balanced in effect by abnormally small ones, the efficiency of the accumulators will probably closely average 65%, and I think this figure a safe one to estimate upon.

On the above basis the following figures are self-explanatory :—

FOR A SINGLE CELL.

Rate of working.....	0.0804 h.p.
Time of working at this rate	3.75 hours.
Total work.....	0.3016 h.p.
Battery per h. p. hour....	126. lbs.

Thus 38 cells will weigh 1,444 pounds, and will develop 11.46 h. p. hour, which, expended at the rate of 60 watts per cell, is equal to 3 h. p. for 3.82 hours. Any loss in secondary conversion must, of course, be deducted from these values.

As to the permanency of the cells, both as regards mechanical durability and electrical efficiency, time alone can report.

TABULATED RESULTS.

5 CELLS JULIEN BATTERY.

Charge No. 1.—After being discharged to 1.7 volts per cell.

Time of charge. Begin.	End.	t Hours.	P. D. @ cells E volts.	Rate of charge. C Amperes.	CE Watts.	Total charge. Ct Ampere-hours.	CEt Watt-hours.
A. M.							
11.20	11.30	1/6	10.91	17.18	187.4	2.86	31.2
11.30	12.	1/2	11.01	17.14	188.7	8.57	94.3
12.	12.30	1/2	11.29	17.81	201.1	8.90	100.5
12.30	1.10	2/3	11.34	17.15	194.5	11.43	129.6
1.10	2.05	15/16	11.38	17.81	202.7	16.33	185.8
2.05	2.40	5/8	11.62	17.81	206.6	10.39	120.7
2.40	3.30	7/8	11.76	18.	211.7	15.	176.4
3.30	4.30	1	12.	17.81	213.7	17.81	218.7
4.30	5.15	13/16	12.26	17.81	218.3	13.34	165.8
5.15	5.35	1/3	12.26	16.51	202.4	5.5	67.4
Totals and averages.		6.25	11.76	17.6	205.3	110	1283.

5 CELLS JULIEN BATTERY.

Charge No. 2.

Time of charge. Begin.	End.	t Hours.	P. D. @ cells E Volts.	Rate of charge. C Amperes.	CE Volts.	Total charge. Ct Ampere-hours.	CEt Watt-hours.	
P. M.								H. M. F. before starting = 10.87 volts.
2.	2.20	1/3	10.82	18.	194.8	6.	64.92	
2.20	2.35	1/4	11.06	18.54	205.1	4.63	51.2	
2.35	2.55	1/3	11.06	18.	199.	6.	66.4	
2.55	3.35	2/3	11.06	18.54	205.1	12.36	136.7	
3.35	5.	1 25/60	11.29	18.	202.5	25.5	287.9	
5.	5.30	1/2	11.38	17.85	203.1	8.92	101.6	
5.30	6.	1/2	11.53	18.	207.5	9.	103.8	
Charge continued May 6th after an interval of 14 hours.								Gasing freely.
A. M.								
8.50	9.	1/6	11.53	18.	207.5	3.	34.6	
9.	9.15	1/4	11.76	18.	211.7	4.5	52.9	
9.15	9.40	1/6	12.	18.	216.	7.5	90.	
9.40	10.30	5/6	12.26	18.54	227.3	15.45	189.4	
10.30	11.30	1	12.6	18.	226.8	18.	226.8	
11.30	11.45	1/4	13.07	17.3	226.1	4.32	56.5	
11.45	1	1/4	13.07	18.	235.2	22.5	294.1	
Totals and means.		8.17	11.9	18.07	215.	147.68	1756.8	

Discharge No. 1.—15 hours after charge.

Time of discharge. Begin.	End.	t, Hours.	P. D. @ cells E Volts.	Rate of discharge. C, Amperes.	C, E, Watts.	Total discharge. C, t, Ampere-hours.	C, E, t, Watt-hours.	
								E. M. F. open circuit before commencing discharge = 10.82 volts.
9.10	9.18	1/6	10.59	20.34	215.4	2.71	28.7	
9.18	11.	1 11/60	10.35	19.72	204.1	33.52	346.9	
11.	12.30	1 1/2	10.12	19.07	193.	28.6	289.4	
12.30	1.30	1	9.88	18.84	184.	18.84	184.	
1.30	1.45	1/4	9.65	18.54	178.9	4.63	44.7	
Totals and averages.		4.59	10.12	19.23	194.6	88.30	893.7	

$\frac{C, E, t,}{C E t}$ Ratio of work delivered to work absorbed..... = 69.7%

$\frac{C, t,}{C t}$ Ratio of current delivered to current absorbed..... 80.8%

$\frac{C,}{C}$ Ratio of discharge current charging current..... 109.3%

Reduction in potential during discharge..... 9%

Digitized by Google

Discharge No. 2.—After an interval of 2 hours since charging.

Time of discharge. Begin.	End.	t, Hours.	P. D. @ cells E, Volts.	Rate of discharge. C, Amperes.	C, E, Watts.	Total discharge. C, t, Ampere-hours.	C, E, t, Watt-hours.	
P. M.								
3.	3.10	1/6	10.85	28.31	293.	4.72	48.8	E. M. F. before discharging = 10.63 volts.
3.10	3.30	1/3	10.85	27.9	288.8	9.30	96.3	
3.30	4.15	3/4	10.25	27.55	282.4	20.66	211.8	
4.15	4.20	1/12	10.25	28.7	294.2	2.39	24.5	
4.20	4.45	5/12	10.25	30.	307.5	12.50	128.1	
4.45	5.10	5/12	10.16	29.83	303.1	12.43	126.3	
5.10	5.50	2/3	10.	29.5	295.	19.67	196.7	
5.50	6.	1/6	9.88	29.05	286.8	4.84	47.8	
Discharge continued May 7th after an interval of 15 hours.								
A. M.								
9.07	9.10	1/20	10.02	30.6	306.6	1.53	15.3	
9.10	9.15	1/12	9.88	29.83	294.7	2.49	24.6	
9.15	9.35	1/3	9.88	29.07	287.2	9.69	95.4	
9.35	9.50	1/4	9.55	28.31	270.4	7.08	67.6	
Totals and means.		8.72	10.09	28.86	291.2	107.3	1083.2	

$\frac{C, E, t,}{C E t}$ Ratio of work delivered to work absorbed..... 61.7%

$\frac{C, t,}{C t}$ Ratio of current delivered to current absorbed..... 72.6%

$\frac{C,}{C}$ Ratio of discharge current to charging current 159.7%

Reduction in potential during discharge..... 8%

5 CELLS JULIEN BATTERY.—*Charge No. 8.*

Time of charge. Begin.	End.	t Hours.	P. D. @ cells E Volts.	Rate of charge. C Amperes.	$C E$ Watts.	Total charge. $C t$ Ampere-hours.	$C E t$ Watt-hours.	
A. M.								
10.	10.05	1/20	10.82	18.	194.8	1.50	16.2	
10.05	10.20	1/4	11.06	18.54	205.1	4.62	51.1	
10.20	11.	2/3	11.29	18.8	212.2	12.50	141.1	
11.	11.15	1/4	11.29	19.07	215.3	4.77	53.8	
11.15	12.05	5/6	11.29	18.54	209.3	15.45	174.4	
12.05	1.05	1	11.53	18.54	213.7	18.54	213.7	
1.05	1.30	5/12	11.62	18.	209.2	7.5	87.1	
1.30	2.05	7/12	11.76	18.	211.7	10.5	123.3	
2.05	2.45	2/3	12.	18.	216.	12.	144.	Gasing slightly.
2.45	3.	1/4	12.26	18.	220.68	4.5	55.2	
3.	3.30	1/2	12.6	17.81	224.4	8.9	112.1	Gasing freely.
3.30	4.	1/2	13.07	17.81	232.6	8 9	116.3	
4.	4.30	1/2	13.16	17.81	234.2	8.9	117.1	Gasing rapidly
4.30	5.	1/2	13.3	17.81	237.	8.9	118.5	
5.	5.30	1/2	13.44	17.15	230.5	8.57	115.2	
5.30	6.	1/2	13.54	17.15	232.2	8.57	116.1	
Totals and Means.		8	12.18	18.08	219.4	144.62	1755.2	

Discharge No. 8.—After an interval, since charging, of 16 hours.

Time of discharge. Begin.	End.	t, Hours.	P. D. @ cells E, Volts.	Rate of discharge. C, Amperes.	C, E, Watts.	Total discharge. C, t, Ampere-hours.	C, E, t, Watt-hours.	
A. M.								
9.57	9.58	1/20	10.59	30.60	324.	.51	5.	E. M. F. before discharge 11.20 volts.
9.58	10.	1/20	10.44	29.83	311.3	.99	10.3	
10.	11.15	1 1/4	10.35	29.82	308.6	37.27	385.7	
11.15	12.	3/4	10.25	29.4	301.4	22.05	226.	
12.	12.30	1/2	10.12	29.07	294.2	14.53	147.	
12.30	1.	1/2	10.	29.83	298.3	14.96	149.6	
1.	1.10	1/6	9.8	29.	283.2	4.83	47.3	
1.10	1.20	1/6	9.6	28.7	275.	4.8	46.	
1.20	1.30	1/2	9.41	28.	263.4	4.67	43.9	Fell suddenly to C= 21 and E=7.3 volts.
Totals and Means.		8.55	10.14	29.47	299.	104.61	1060.8	

$\frac{C, E, t,}{C E t}$ Ratio of work delivered to work absorbed..... 60.5%

$\frac{C, t,}{C t}$ Ratio of current delivered to current absorbed..... 72.8%

$\frac{C,}{C}$ Ratio of discharge current to charging current.....168%

Reduction in potential during discharge..... 11%

Digitized by Google

Redischarge.—After being discharged to 1.7 volts and then left on open circuit for 19 hours.

A. M.								
8.16	8.17	$\frac{1}{60}$	10.12	30.60		.51	5.2	E. M. F. @ start = 10.59 volts.
8.17	8.20	$\frac{1}{20}$	9.88	29.83		1.49	14.7	
8.20	8.22	$\frac{1}{30}$	9.79	29.4		.98	9.6	
8.22	8.25	$\frac{1}{20}$	9.74	29.07		1.45	14.1	
8.25	8.26	$\frac{1}{60}$	9.65	28.7		.48	4.6	
8.26	8.27	$\frac{1}{60}$	9.41	28.31		.47	4.4	
8.27	8.28	$\frac{1}{60}$	9.32	27.9		.45	4.2	
8.28	8.29	$\frac{1}{60}$	9.18	26.8		.44	4.	
Totals and Means.		$\frac{11}{60}$	9.7	28.9		6.27	60.8	

5 CELLS JULIEN BATTERY.

Fourth Charge.

Time of charge.			P. D. @ cells E Volts.	Rate of charge.		Total charge.		
Begin.	End.	t Hours.		C Amperes.	CE Watts.	Ct Ampere-hours.	CEt Watt-hours.	
A. M.								
8.30	8.35	$\frac{1}{12}$	10.82	18.	194.8	1.5	16.2	
8.35	8.40	$\frac{1}{12}$	11.06	18.	199.	1.5	16.4	
8.40	8.45	$\frac{1}{12}$	11.29	18.	202.5	1.5	16.9	
8.45	10.15	$1\frac{1}{2}$	11.29	18.54	209.3	27.8	313.9	
10.15	12.	$1\frac{3}{4}$	11.53	18.	207.5	31.67	365.2	
12.	1.15	$1\frac{1}{4}$	11.76	18.	211.7	22.5	264.6	
1.15	1.45	$\frac{1}{2}$	12.	18.	216.	9.	108.	
1.45	2.	$\frac{1}{4}$	12.04	18.	216.7	4.5	54.2	Gasing slightly.
2.	2.30	$\frac{1}{2}$	12.25	18.	220.5	9.	110.3	
2.30	3.	$\frac{1}{2}$	12.45	18.	224.1	9.	112.	Gasing freely.
3.	3.30	$\frac{1}{2}$	12.67	18.	228.1	9.	114.	Gasing violently.
3.30	5.30	2	12.88	18.	231.8	36.	463.6	Gasing furiously.
Totals and Means.		9	12.	18.01	216.2	162.98	1955.3	E. M. F. after charging 11.78 volts.

Fourth Discharge.—15½ hours after charging.

Time of discharge.			P. D. @ cells E_1 Volts.	Rate of discharge.		Total discharge.	
Begin.	End.	t_1 Hours.		C_1 Amperes.	$C_1 E_1$ Watts.	$C_1 t_1$ Ampere-hours.	$C_1 E_1 t_1$ Watt-hours.
A. M.							
9.	9.01	$\frac{1}{60}$	10.68	30.60	326.	.51	5.4
9.01	10.31	$1\frac{1}{2}$	10.38	29.83	309.6	44.74	464.4
10.31	10.46	$\frac{1}{4}$	10.34	29.4	304.	7.35	76.
10.46	11.16	$\frac{1}{2}$	10.25	30.	307.5	15.	153.3
11.16	11.46	$\frac{1}{2}$	10.11	29.4	297.2	14.7	148.5
11.46	12.01	$\frac{1}{4}$	9.9	29.	287.1	7.25	71.8
12.01	12.16	$\frac{1}{4}$	9.80	31.	303.4	7.75	76.
12.16	12.26	$\frac{1}{6}$	9.67	29.8	288.1	4.97	44.
12.26	12.30	$\frac{1}{15}$	9.37	29.	271.7	1.93	18.
12.30	12.32	$\frac{1}{30}$	9.	28.	252.	.93	8.4
Totals and Means.		3.53	10.13	29.8	301.9	105.13	1065.8

$\frac{C_1 E_1 t_1}{CEt}$ Ratio of work delivered to work absorbed. ... 54.5%

$\frac{C_1 t_1}{Ct}$ Ratio of current delivered to current absorbed. 64.3%

$\frac{C_1}{C}$ Ratio of discharge current to charging current. 165.4%

Reduction in potential during discharge..... 15%

Digitized by Google

5 CELLS JULIEN BATTERY.

Charge No 5.

Time of charge.			P. D. @ cells E Volts.	Rate of charge.		Total charge.		
Begin.	End.	t Hours.		C Volts.	CE Watts.	Ct Ampere-hours.	CEt Watt-hours.	
P. M.								
12.38	12.48	$\frac{1}{6}$	11.05	26	287.3	4.3	47.9	
12.48	1.30	$\frac{41}{60}$	11.18	26	290.	18.2	203.5	
1.30	2.	$\frac{1}{2}$	11.30	26	293.8	13.	146 9	
2.	2.50	$\frac{5}{6}$	11.47	26	298.2	21.7	248.9	
2.50	3.30	$\frac{2}{3}$	11.60	26	301.6	17.3	200.7	
3.30	4.	$\frac{1}{2}$	11.82	26	307.3	13.	153.6	Gasing mildly.
4.	4.15	$\frac{1}{4}$	12.04	26	313.1	6.5	78.3	Gasing freely.
4.15	4.30	$\frac{1}{4}$	12.2	20	244.	5.	61.	do
4.30	4.45	$\frac{1}{4}$	12.	15	180.	3.75	45.	Gasing mildly.
4.45	5.45	1	12.	10	120.	10.	120.	do
Totals and means.		5.11	11.58	22.1	255.9	112.75	1305.8	Towards end gasing freely again.

Discharge No. 5.—*After* 15¾ *hours.*

Time of discharge.			P. D. @ cells E_1 Watts.	Rate of discharge.		Total discharge.	
Begin.	End.	t_1 Hours.		C_1 Amperes.	$C_1 E_1$ Watts.	$C_1 t_1$ Ampere-hours.	$C_1 E_1 t_1$ Watt-hours.
A. M.							
9.30	9.35	$\frac{5}{60}$	10.68	11.	117 5	92	9 8
9.35	11.35	2	10.64	10.7	113.8	21 4	227.6
11.35	1.05	1 $\frac{1}{2}$	10.46	10.5	109 8	15.75	164.7
P. M.							
1.05	2.35	1 $\frac{1}{2}$	10.42	10.3	107.3	15.45	160.6
2.35	3.35	1	10.34	10.2	104 5	10 2	105.5
3.35	5.35	2	10.25	10.	102 5	20	205.
5.35	6.35	1	10.11	10.	101.1	10.	101.1
6.35	7.15	$\frac{3}{4}$	10.	10.	100.	6.67	66.7
P. M.			Discharge continued after an interval of 19 hours.				
2.10	2.15	$\frac{1}{12}$	10.1	10.3	104.	.86	8.7
2.15	3.45	1 $\frac{1}{2}$	10.	10.	100.	15.	150.
3.45	4.15	$\frac{1}{2}$	9.8	9.8	96.	4.9	48.
		11.833	10.3	10.23	105.3	121.15	1247.7

$\frac{C_1 E_1 t_1}{C E t}$ Ratio of work delivered to work absorbed..... 95.5%

$\frac{C_1 t_1}{C t}$ Ratio of current delivered to current absorbed.. 107%

$\frac{C_1}{C}$ Ratio of discharge current to charging current. 46.3%

Reduction in potential during discharge..... 8.3%

RECAPITULATION OF FIVE TESTS.

Test No.	Charge or discharge.	Time. Hours	Mean P. D. at cells. Volts.	Rate.		Total.		$\frac{C_1 E_1 t_1}{C E t}$ %	$\frac{C_1 t_1}{C t}$ %	$\frac{C_1}{C}$ %	Fall in potential %	Time bet. charge and discharge. Hours.
				C Amperes.	CE Watts.	Ct Ampere-hours.	CEt Watt-hours.					
1.	Charge.	6.25	11.76	17.6	205.3	110.	1283.					
1.	Discharge.	4.59	10.12	19.23	194.6	88.3	893.7	69.7	80.3	109.3	9.	15
2.	Charge.	8.17	11.9	18.07	215.	147.7	1756.8					Interv. of 14 hours.
2.	Discharge.	3.72	10.09	28.86	291.2	107.3	1083.2	61.7	72.6	159.7	8.	2 + 15
3.	Charge.	8.	12.13	18.08	219.4	144.6	1755.2					
3.	Discharge.	3.55	10.14	29.47	299.	104.6	1060.8	60.5	72.3	163.	11.	16
4.	Charge.	9.	12.	18.01	216.2	162.9	1955.3					
4.	Discharge.	3.53	10.13	29.8	301.9	105.13	1065.8	54.5	64.3	165.4	15.	15½
5.	Charge.	5.11	11.58	22.1	255.9	112.75	1305.8					
5.	Discharge.	11.83	10.3	10.23	105.3	121.15	1247.7	95.5%	107%	46.3	8.3	15¾

Digitized by Google

THE DESIGN AND CONSTRUCTION OF DYNAMO-ELECTRIC AND ELECTRO-DYNAMIC MACHINERY.[1]

BY DR. WELLINGTON ADAMS.

Member St. Louis Academy of Science, and Engineer's Club of St. Louis.

It has taken many scores of years for the development of thermo-dynamics to that degree of precision which that science has now reached. The science of dynamic-electricity, which has now reached fully as great a degree of precision as that of thermo-dynamics has, however, been almost entirely developed within the last decade. It has not, however, like the fabled Minerva, sprung up in a night fully developed from the brain of any one man, but on the contrary has been evolved by a process of evolution from the brains of some of the brightest intellects and most scientific engineers of our times, each one in turn adding a mite toward the creation of what is now justly recognized as one of the exact sciences. But 10 years have elapsed since Monsieur Gramme introduced to the scientific world that wonderful piece of electric machinery bearing his name, with all its involved mysteries. It seems but yesterday when dynamo-electric machines were constructed in a purely empirical manner by throwing together a lot of iron and copper, with but few of the underlying principles governing their operation even partially known to either the designer or constructor. This method soon gave way, however, under the hand of practical experience, to rules of thumb which were jealously guarded by their various authors as a means of protecting competing manufacturers. Next came the flooding of current scientific literature with various explanations as to the action of these machines, and next appeared well founded theories from which have been developed an accurate knowledge of the laws governing the operation of all classes of dynamo-electric machines, until at the present day we have at our command practical formulæ, and a knowledge of the subject so accurate as to enable any one versed in the science to design on paper any given type of machine, and to predict its power and the character of its current, with that certainty which attends the design and construction of either thermo-dynamic or hydraulic machinery. In reaching this point, many a pretty theory has been exploded, and many a step retraced. We are now no longer dependent upon empirical methods, upon rules of thumb, and upon traditional practices. It is not even sufficient now to be able to make one particular kind or type of machine so that it will work; but we must also know the why and the wherefore of every step, for in this way only are we enabled to generalize, and from a few practical examples construct all possible varieties. For a long time our text books and the current electrical literature was filled with intricate formulæ, involving integral calculus and other intricate branches of higher mathematics, all of which involved the use of certain constants which had to be predetermined for each particular machine, and for each particular type of machine; there were no generalizations, no universally applicable formulæ, no general constants, so that these formulæ were practically useless and the electrical engineer was compelled to resort to rules of thumb and traditional practices. To-day, however, it is quite different, we can now with mathematical precision calculate the best size, shape, and exciting power of a pair of field magnets, the exact speed at which a given machine must run to produce a certain electric output. To do this, however, we are obliged to resort to other laws and to other theories than those propounded by Lenz, Jacobi, Dub, Muller, and others, concerning the magnetic moment of cylindrical electro-magnets. For those formulæ and theories upon which we rely to-day, we are indebted to Frohlich, Deprez, Thomson, Hopkinson, and Kapp. Just as the first makers of steam engines knowing nothing of the mechanical theory of heat, were yet able to make fairly good engines long before Joule, Clausius, Rankine, and Zeuner, showed us how to make excellent steam engines, so Gramme, Siemens, Brush, Edison, and others made fairly good dynamo-electric machines before Frohlich, Deprez, Thomson, Hopkinson, and Kapp unravelled the mysteries and fundamental principles of dynamo-electricity to that extent which has redered it possible to construct an almost theoretically perfect dynamo-electric and electro-dynamic machine. The present state of the art is due almost entirely to that conception which looks upon an electric current and a magnet as emitting lines of force which, in their passage through different media, meet with a resistance proportionate to and dependent upon the character of the matter they traverse. For the latter conception we are almost exclusively indebted to the Messrs. Hopkinson and Mr. Kapp. Whether such lines do really exist or not is of but little moment for our purpose, since it suffices to know that by means of iron filings we can make such lines visible and study their properties. According to this conception every wire carrying a current is surrounded by a multitude of circular lines arranged like concentric rings around the wire (see figure 1), which lines gradually diminish in number as the distance from the wire increases. If we could have a single magnetic pole, that is, a piece of steel having only one polarity, and that a north pole, for instance, this pole would, if brought near a wire carrying a current of electricity, revolve around it; but since a magnet with only one pole is an impossibility, and since the same force which urges the north pole in one direction will urge the south pole in the opposite direction, the magnet as a whole cannot revolve around a straight wire, but will set itself at

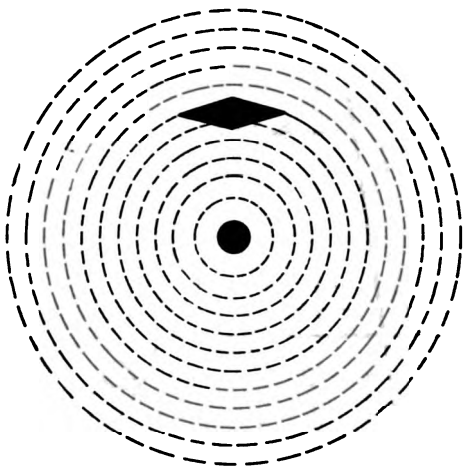

Fig. 1.

right angles to it. In what direction the lines of force run around the wire we cannot say, but to fix our ideas we may consider those lines positive which would carry a north pole around the wire in the direction of the hands of a watch if the observer sees the wire from the end and if the current flows from the observer. If we place a piece of paper over such a magnet and at right angles to such a wire, the lines of force made visible by iron filings will now appear as somewhat distorted circles crowded densely into the poles of the magnet. Within the magnet they are not so well defined as upon the outside of it, but as near as can be judged from rough experiment no lines are lost in the middle, the same number of lines that enter at one side of the magnet finding their way out at the other. This follows also when we come to consider the fact that we cannot have one free magnet or a magnet with unequal poles. Whence it follows that every line of force must be a closed line; an open magnetic line of force, that is, a line with no ends, being as much of an impossibility as a continuous current in an open circuit. According to our nomenclature, a positive line of force goes in the air from the north to the south pole, and in iron from south to

1. Read before the Engineer's Club of St. Louis, February 16th, 1887.

Digitized by Google

north. If, instead of a steel magnet, we had experimented with a piece of soft iron, we should also find that through its presence, the originally circular lines around the wire would have become somewhat distorted and crowded together at the ends of the piece of soft iron, which like a steel magnet will set itself at right angles to a straight wire carrying a current. The total number of lines made visible by filings would, under these circumstances, be considerably increased, even on the side of the wire opposite to that where the piece of iron is placed, and if we should increase the current we would still further increase the number of lines. This experiment, therefore, shows that the number of lines would thus be dependent upon the strength of current, and that one and the same current will yield more lines if a piece of soft iron be placed in its neighborhood, and also that the lines pass more easily through iron than through air. This latter circumstance leads us to the conception that every medium offers a certain resistance to the passage of these lines of force, and the inverse of that resistance is what is called the "magnetic permeability" of the medium, which, according to Thomson, in the case of iron, is from 40 to 20,000 times as great as that of air. In other words, if we should surround this straight wire by a cylinder of iron, the same current would yield within that space, from 40 to 20,000 times as many lines of force as when the space contained air only. Experiment also shows that not only that portion of the wire which is in immediate proximity to the magnet affects the latter, but also the portion above and below, and if we retain our conception that no part of the current can act upon the magnet, except by a line of force which must actually get through it, we are forced to conclude that the lines must be closed curves of three dimensions, *i. e.*, curves in space. With a straight wire, infinitely long, the angle of inclination through which a line may be deflected, varies between zero and 90 degrees, but from the experimental fact that a current cannot exert any influence on a magnetic pole situated in a straight line with the current, it follows that 90 degrees is the limit through which a line of force can be deflected, and if so deflected its influence is infinitesimal. The importance of this fact will be seen later on, when we come to consider which parts of the windings upon field magnets are useful and which are useless. The nearer the magnet is to the wire the greater is the force which tends to set the magnet at right angles to the wire. Magnetic poles of the same name or sign repel each other, and from this we may conclude that parallel lines of force running in the same direction repel each other. Each line of force tends to shorten itself; whence it follows that lines of force encircling a free wire, form concentric circles, for the circle is of all possible curves the shortest for a given diameter. When lines of force in different planes cross each other at an angle, they tend to become parallel, but of opposite sense, and thus to eliminate each other. Let us now briefly summarize these propositions.

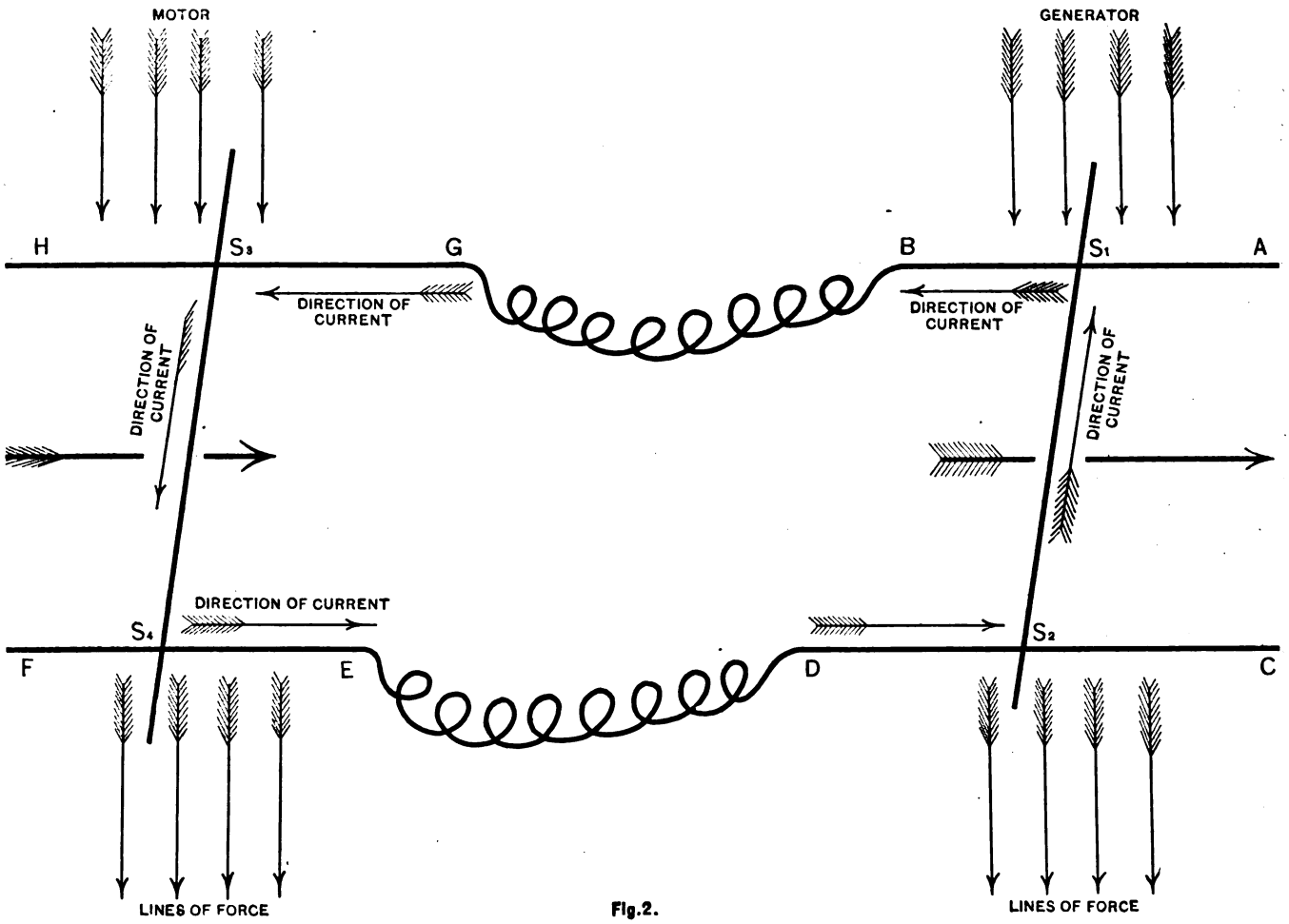

Fig. 2.

1. A line of force must be a closed curve.
2. It has a tendency to shorten itself, becoming stronger the shorter it is.
3. It need not be a plane curve, part of it can be bent off at any angle short of 90 degrees.
4. Lines of force find less resistance in iron than in air, and a greater number of lines can run through iron than through an equal space of air.
5. Parallel lines of the same sense repel each other, and parallel lines of opposite sense attract and eliminate each other.
6. Lines crossing at an angle have a tendency to set themselves parallel to each other, but in opposite sense. Upon these conceptions is founded the accepted theory of the operation of the dynamo, and upon this theory the formulæ which we are about to consider are based. It is

Digitized by Google

well known that if a closed wire is moved so as to cut lines of force, a current of electricity will flow in such wire so long as the movement lasts. Suppose, for instance, we have a straight wire traversed by a current and we approach to it another straight and parallel wire forming part of a closed circuit, then the current induced in the latter will be in opposite direction to that in the fixed wire, and if we remove the wire the current will be in the same direction. A knowledge of these laws has rendered it possible to establish a rule for determining the direction in which a current will be induced by the cutting of lines of force. Imagine a man substituted for a portion of the wire, with his face turned so that the lines of force run towards him, which is equivalent to looking towards the north pole, then, if he move laterally to the left, the current will flow from his feet to his head, while if he move laterally to the right, the current will flow from his head to his feet. The rate at which lines of force are cut by a wire determines the amount of current generated; in other words, the number of lines of force cut per second by a single wire determines the amount of current generated in such wire.

Let us assume the simplest possible example of a dynamo-electric machine as represented in figure 2, which very beautifully and clearly illustrates the fundamental principles involved in both a dynamo-electric and an electro-dynamic machine. Let A, B, C, D, in this figure, represent two straight parallel wires placed in a magnetic field of given uniform intensity, I. This means that every square centimeter of surface contained within the two wires, is traversed by I lines of force running at right angles to the plain, A, B, C, D. The ends, A, C, of the wires may be connected with a galvanometer and the circuit completed by a sliding wire, s_1, s_2, which is moved in the direction of the arrow with the velocity of v centimeters per second. If d represents the distance between the two parallel wires, the area enclosed by the circuit will be increased through movement of the slider, at the rate of dv, square centimeters per second, and the number of lines of force enclosed by the circuit will be increased at the rate of dv I lines per second. The slider, therefore, cuts $d\,v$ I lines per second, and in doing so, there is created a difference of potential between the points, s_1, s_2, which in absolute measure is equal to $d\,v$ I units of E. M. F. We can, therefore, say that e equals $d\,v$ I, where e equals electromotive force of the current generated in the slider. A unit of E. M. F. will be produced if each of the three factors d, v and I are equal to unity—that is, if the parallel wires are one centimeter apart, each square centimeter containing one line of force, and the velocity being one centimeter per second. Assuming then, that the slider has a resistance which is equal to r, but that the galvanometer and the parallel wires have absolutely no resistance, then in that case, the current which will be indicated by the galvanometer, which is assumed to be in the circuit, will be expressed by $\frac{e}{r}$, a unit current will be created if e equals r. In a unit field, d I equals one, and, therefore, r equals v, if $d = 1$. The resistance of the slider can, therefore, be expressed in terms of velocity, as so many centimeters per second, at which it must be moved across a unit field in order to produce unity of current. These units are all based upon the C. G. S. system, and, therefore, in order to trace the connection between the expressions and formulæ already presented and the commercial formulæ to follow, we must first consider the relation which exists between these absolute units under the C. G. S. system, and the commercial units of volt, ohm, and ampere employed in commercial practice; the volt equals 10^8 absolute units of electromotive force.

One ohm equals 10^9 absolute units of resistance.

One ampere equals 10^{-1} absolute units of current.

One commercial unit line of force, according to Kapp, equal 6,000 absolute unit lines. Therefore, to produce in our slider a difference of potential of one volt, it would have to be moved across a magnetic field of unit intensity at a speed of 1,000 kilometers per second. This being an impossible speed we must reduce it in some way, and this can be done by employing a stronger magnetic field, or by increasing the distance between the parallel wires, or by both. Let us now fix these ideas by assuming that the speed of the slider be limited to 10 meters per second, corresponding to about 22 miles per hour, which is a very moderate speed for the periphery of an armature in a dynamo machine; then to obtain one volt the product d I must equal 100,000, which may be obtained by employing a slider one meter long in a magnetic field containing 1,000 lines of force to the square centimeter, or by a slider 10 centimeters long in a magnetic field containing 10,000 lines of force to the square centimeter, or with any other combination which will give the same number of lines of force cut per second. Just what is the maximum number of lines obtainable per square centimeter is not definitely known, some placing it at 11,000 and others at 14,000. In commercial practice, however, such an intensity of field is never reached, the best machines having but from 4 to 8,000 lines of force per square centimeter of armature core. So that it will be seen that to construct a dynamo-electric machine we have but to arrange in the most favorable manner for the cutting of lines of force by a conductor, and that the greater the number of lines cut per second, whether by reason of a combination involving a large number of wires upon the armature, a high velocity of the armature, or a large number of lines of force per square inch, the greater will be the electrical output of the machine. Upon these theories, fundamental principles, expressions and units are based the commercial formulæ which we use in the design and construction of commercial machines. Of course when we come to design these, very many details and considerations come in to form a more intricate problem—such, for instance, as the use of iron within the field coils and within the armature coils, the same being added to concentrate the direction of flow and to prevent leakage of the lines of force to be cut, and also for the purpose of affording a medium to be traversed by said lines of force which will offer the least possible resistance, so that as small an amount of energy as possible will be required to create the magnetic field. We have then to consider the quality and the amount of iron employed and its mechanical and geometrical arrangement. The same fundamental principles and the same considerations come in play when designing an electro-dynamic machine, as the other half of the plate before you serves to illustrate. When the slider s_1 s_2 in the generator is moved in the direction of the arrow, the slider s_3 s_4 in the motor will also move in the direction of the arrow, providing the connections be made and the currents flow in the direction indicated in this diagram. If there were no mechanical or electrical resistances, the slider in the motor would move with the same velocity and to the same extent that the slider in the generator is moved.

It must now be apparent to you that we can arrange a variety of combinations with regard to velocity, intensity of field, and length of slider or wire or number of wires, and yet secure the same current from each combination, providing the resistance of the circuit in each combination remains the same; and the art of designing a dynamo consists in selecting a suitable combination of these factors in any given case, with the smallest internal resistance, and whereby the least possible energy shall be expended in producing the required intensity of field, or number of lines of force to be cut.

From what has already been said, it must also be apparent that while we can construct a dynamo machine without employing iron, as in the ideal machine just considered, yet it is necessary to employ this material in order not to expend an undue amount of energy in pro-

Digitized by Google

ducing the required intensity of field in any given case. Now, therefore, when we come to consider the design of a practical dynamo-machine, questions like the following arise: How shall we arrange matters and things so as to

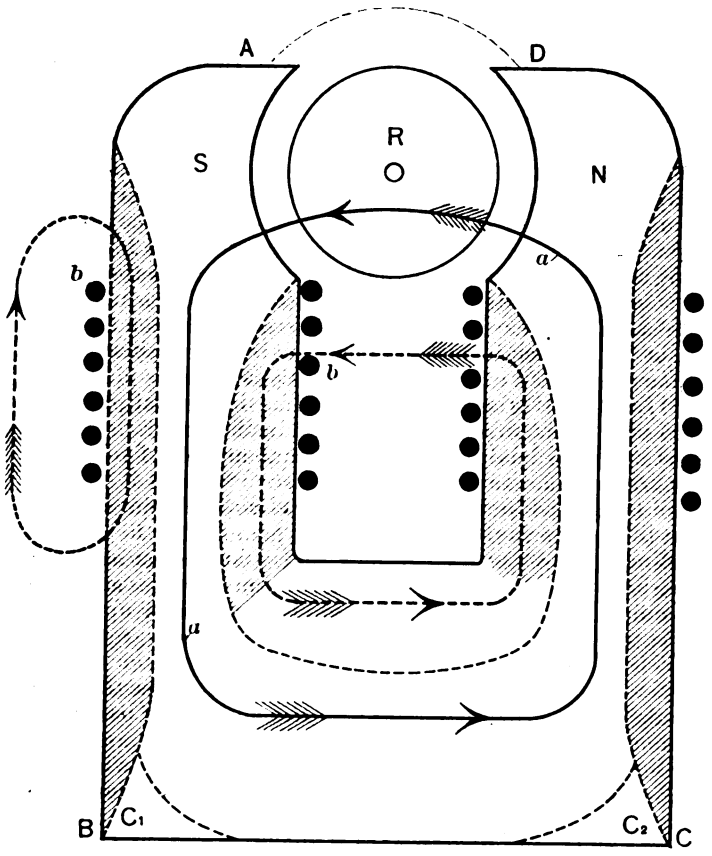

Fig.3.

reduce as much as possible the resistance of the magnetic circuit, and hence the resistance to the flow of lines of force? How shall we arrange our material so as to concentrate our lines of force into a compact field of great intensity? How shall we avoid leakage of lines? What will be the actual resistance of the magnetic circuit as finally arranged? What then must the exciting power be in order to overcome this magnetic resistance and produce a field of the required intensity. And, finally, how are we to calculate the E. M. F. to be obtained from any given arrangement or combination?

Before considering these questions, however, let us for a moment study an analogy in the case of the battery and electric circuit represented in figure 4, and while studying this plate observe its resemblance to figure 3, which represents a single horse-shoe magnet dynamo-electric machine.

In figure 4 Ra represents a certain resistance (corresponding to the magnetic resistance of an armature core). $\frac{Ra}{2}$ represents a certain resistance in the circuit (corresponding to the two air spaces around an armature in a dynamo). P. P. = the poles of the battery (corresponding to the poles of a dynamo). Rf = the internal resistance of the battery (corresponding to the magnetic resistance of the magnetic circuit in a dynamo field). P = the internal E. M. F. of the battery (corresponding to the exciting power or ampere-turns in a dynamo). z = the total current produced by the battery (corresponding to the total lines of force created by the field of a dynamo). z_1 = the resultant current created by the battery in the external or useful circuit (corresponding to the number of useful lines of force passing through the armature of a dynamo). Then in the case before you, according to Ohm's law, $z = \frac{P}{Ra + Ra + Rf}$. Let us now suppose this battery to be submerged in a badly conducting medium, as water, for instance. Some of the current will then flow through the paths indicated by the dotted lines, which represent a certain leakage. The useful current passing through Ra will therefore have been reduced to the extent of this leakage. It is apparent that the greatest leakage will occur between the poles, where the difference of potential is a maximum; therefore, in a given medium having a definite resistance and with a given arrangement of battery the total loss through leakage is approximately proportional to the difference of potential between the poles. Now, suppose the latter to have a value of p_1, then the current lost $\delta = \frac{p_1}{\rho}$, where ρ represents the average resistance of the surrounding medium for this particular configuration of battery. Calling the total current produced in the battery z, then $z = z_1 + \delta$. Now, if it were possible to create an E. M. F. (P) of the battery of any desired value between zero and that value which will, notwithstanding the leakage, produce the maximum current (z_1) required at Ra, then we can determine what E. M. F. is required for each value of z_1 between zero and maximum. And to do this we first determine by Ohm's law the difference of potential at the poles, by this equation, $p_1 = (Ra + Ra)\, z_1$. Then the loss by leakage through this equation $\delta = \frac{p_1}{\rho}$; then the total current produced by this, $z = z_1 + \delta$. Then the loss of E. M. F. (p_2) occasioned by the internal resistance (Rf) of the battery, by this equation—$p_2 = Rf\, z$; and, finally, the total E. M. F. (P), which, of course, will be $p_1 + p_2$. Now,

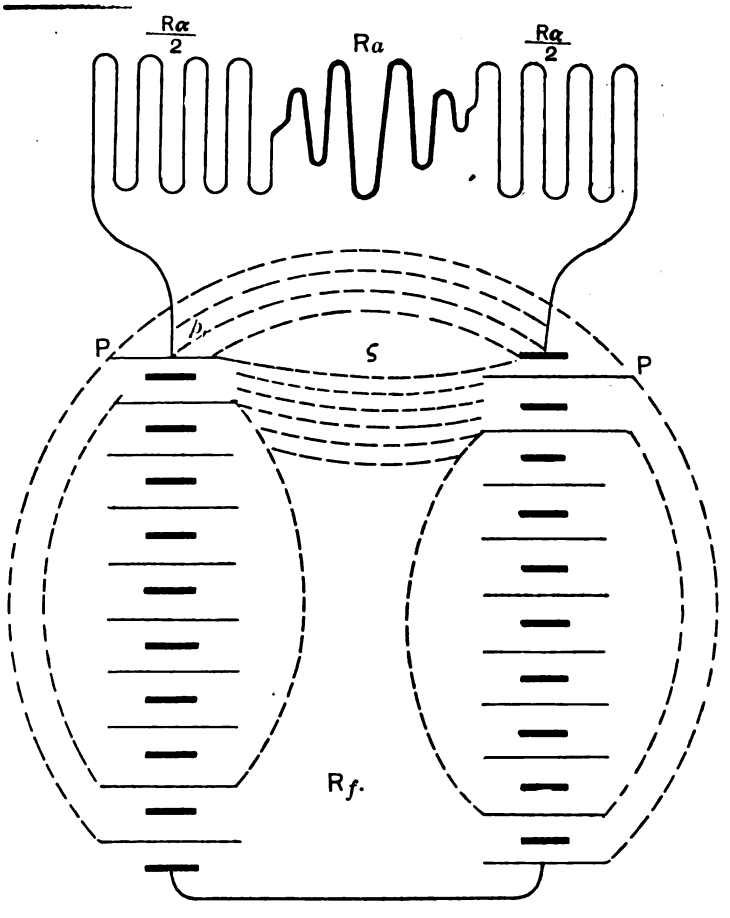

Fig.4.

as I have already stated, we may consider this submerged battery as analogous to a horse-shoe magnet-dynamo, because the latter is always surrounded by a medium through which magnetic lines of force may pass, and in this analogy

Digitized by Google

the total E. M. F. of the battery corresponds to the total exciting power applied to the field magnet, while the currents z, z_1 and δ correspond respectively to the number of lines created within the magnet core, the useful lines passing through the armature, and those lines lost by leakages. Now, from what has been stated, it follows that knowing the value of ρ and of p_1, we can readily calculate the value of δ, or the lines of force lost by leakages in any particular form of battery or field magnet. The value of ρ in any given case being expressed by the equation $\rho =$ a constant $+ \frac{la}{A\,a\,b\,a}$, where the constant represents the specific resistance of the medium occupying the space between P. P., which has been determined by experiment to be 1,440 for air, iron being 2; and where la represents the average distance between P. P., and where $A\,a\,b\,a$ represents the area of the polar surface at the points where lines of force may leak or escape. For similar types of dynamos the value of ρ is inversely proportional to the linear dimensions of the machine, and can be found by dividing a constant by the diameter of the armature.

The value of p_1 will, of course, be represented by $P = P_2$, where P is the total E. M. F., in the case of a battery, or the total exciting power in the case of the field magnet of a dynamo, and where p_2 is the E. M. F. consumed by the internal resistance of the battery, in the case of a battery, or in the case of the field magnet of a dynamo, the exciting power consumed by the magnetic resistance of the field core. Hence, it is possible in any given case, knowing the geometrical and mechanical data, to determine the useful lines and the lost lines, or to determine the exciting power necessary to produce the required useful magnetic lines of force for the production of a required E. M. F., or of a required current through a given electrical resistance.

It now only remains to consider the analogy of electric resistance to magnetic resistance. All substances and media have a constant specific electrical resistance into which we multiply the ratio of length divided by area to find the actual electrical resistance in any particular case, the specific electrical resistance of any substance forming a constant co-efficient as a multiplier. But, in the case of magnetic resistance, which is also a quantity proportional to the ratio of length divided by area, the co-efficient with which the ratio of length to area must be multiplied (the specific resistance) is not a constant, but varies with the density of lines flowing through the iron, the maximum resistance or the point of maximum magnetic permeability being reached at the point of absolute saturation.

Now, in the formula $z = \frac{P}{R\,a + R\,a + R\,f}$, already given, the two resistances $R\,a$ and $R\,f$ are, for very low degrees of magnetization, found by determining the average distances through which the lines flow in the armature and in the field magnet, and dividing by the respective areas, the ratio in each case being multiplied by 2, which latter numeric represents the initial specific magnetic resistance of the best annealed wrought iron. This empirical formula is, however, only correct for low degrees of magnetization, and consequently for comparatively weak exciting powers. In other words, it is assumed in this formula that the degree of magnetization is not pushed beyond what Thompson calls the dia-critical point of magnetization, *i. e.*, to a point equal to one-half the maximum magnetic permeability of the iron used in any given case. To make this formula universally applicable to all kinds and qualities of iron and to all degrees of magnetization or to different magnetic densities and exciting powers, Mr. Kapp has recently introduced a tangent function, to which your attention will be called presently.

Now, a dynamo-electric machine is simply a mechanical arrangement for placing in the smallest possible space the greatest possible number of wires or convolutions of a wire so as to cut the greatest possible number of lines of force with each revolution of the armature, and thus generate the greatest amount of current with the least possible length of wire, the current so generated being used to energize the field and so create the lines of force which are to be cut. Our principal object must be also the production of a field, with the least possible expenditure of energy for its production, and we must also strive to keep down the resistance of the armature both by having the conductor short and of as large cross-sectional area as possible, since the internal resistance of the machine is a measure of the energy consumed in the machine. When we start to design a dynamo with these objects in view, the following questions arise:

What relationship must the field bear to the armature?

What ratio of iron in field to that in armature?

What ratio of copper in field to that in armature?

What ratio of copper to the iron in field?

What ratio of copper to iron in armature?

How many sections shall the armature be composed of?

How many turns to each section shall there be?

What size of wire should be used in the armature?

What size of wire should be used in the field?

What should be the cross-sectional area of the iron in the armature?

What should be the cross-sectional area of the iron in the different parts of the field?

What should be the thickness of the insulation between each convolution of wire and between the iron and the wire and between each section of the armature?

At what speed should the armature be run?

Where must the brushes be placed?

What relationship should exist between the number of convolutions in the armature and the number of convolutions on the field?

How large should the pole pieces be?

To what extent should the pole pieces encircle the armature?

How shall we design the machine to give under certain given conditions a required current or a required E. M. F.?

All these and many more similar questions present themselves when we start to design a dynamo-electric machine. As I have already stated, these questions have up to within a very short time been met by rules of thumb, it being one man's practice to place four times the amount of material in the field as he had in the armature by weight, while another would make the length of wire on the field bear a certain relationship to the length of wire in the armature. The relationship between the amount of wire and the amount of iron both in armature and the field being so adjusted as to produce about the same depth of wire as the iron core was thick. With such knowledge and under such practice it was impossible to pre-determine the output of a machine. Now, however, we have practical formulæ at our disposal, and experimentally determined constants, which are capable of general application, so that we may with scientific accuracy predict the current that a given machine will produce, the electromotive force it will create, its resistance when running, the extent to which it will become heated when running, the speed it should run at, the energy lost in the field and in the armature, the losses from electric, magnetic, and mechanical friction, and hence the electric and commercial efficiency, the power it will require to run it, and, in fact, everything it is desirable to know.

With these premises I think we may now proceed to consider our commercial formulæ, according to which practical dynamos can be designed by simply introducing the proper numeric values for the different algebraic factors involved; for we have now reached a point where it must be apparent that in order to create a given E. M. F. we have but to provide mechanically for the cutting of a definite number of lines of force per second. Now, to determine what number must be cut, we employ this formula:

Digitized by Google

$$\text{E } a = \frac{z_1 \text{ N } t \; n}{1{,}000{,}000},$$

which on solving for z_1 gives us :

$$z_1 = \text{E } a \left(\frac{1{,}000{,}000}{\text{N } t \; n} \right),$$

where

E a = The total internal E. M. F. produced in the armature,

z_1 = The available lines of force passing into the armature core from the field.

N t = The total number of convolutions of wire wrapped around the armature core of a size or area capable of carrying the required current, allowing at least two square inches cross-section area for every thousand amperes.

n = The allowed speed of the armature in revolutions per minute.

And this formula when substituting $2\,a\,b\,m$ for z_1, becomes :

$$\text{E } a = \frac{2\,a\,b\,m \text{ N } t \; n}{1{,}000{,}000}; \text{ or, } z_1 = \text{E } a \left(\frac{1{,}000{,}000}{2\,a\,b\,m \text{ N } t \; n} \right),$$

where,

$a\,b$ = The cross-sectional area of actual iron in each magnetic circuit of the armature core.

m = The number of lines of force allowed to each square inch of cross-sectional area of armature core. Which should not exceed ten.

In this short paper it is impossible for me to go into the question as to how this formula has been reduced to this simple form, and the reason for dividing by one million. Suffice it to say that this latter has been brought about by changing from the absolute or C. G. S. system of units to the commercial one, and by changing from centimeters per second to revolutions per minute.

Now, having found by this formula the number of lines of force which must flow into the armature core, or be cut, in order to produce a required E. M. F. with a given number of convolutions on the armature, and speed of same, it becomes necessary to determine the amount of exciting power, or, in other words, the number of ampere-turns which must constitute the field in order to create the said required number of lines of force which the armature must cut. This we determine by means of the following formula, which it will be observed, contains the tangent function, already referred to as a means of providing for the saturation factor :

$$z = \frac{\text{P}}{1{,}440 \times 2 \frac{\delta}{\lambda\, b} + \frac{l}{a\, b} \times \frac{tan\left(\frac{\pi}{2}\sigma_1\right)}{\frac{\pi}{2}\sigma_1} + \frac{2\,\text{L}}{\text{A B}} \times \frac{tan\left(\frac{\pi}{2}\sigma_2\right)}{\frac{\pi}{2}\sigma_2}}$$

Where,

z = The total number of lines of force produced by the field, which should be slightly greater, say from 2 to 5 per cent., when the field is of good design, than z_1, so as to allow for the lines lost by leakage.

P = The total ampere-turns upon the field.

δ = The distance between the polar surface and the outer surface of the armature core.

$\lambda\, b$ = The superficial area of the polar surface, determined by multiplying λ, the arc spanned, by σ, the breadth of the surface of the field poles presented to the armature.

l = The mean length of that portion of the magnetic circuit formed by the armature core.

$a\, b$ = The cross-sectional area of the actual iron in the armature core.

σ_1 = The maximum number of lines of force per square inch which the iron in the armature core will carry at the saturation point, divided by the actual number which we may determine to allow per square inch. The latter should certainly not exceed one-half that number which would produce saturation, which number for the various kinds of iron will be given further on; ordinarily, in a good Norway wrought-iron armature σ would equal 2.

L = The mean length of that portion of the magnetic circuit formed by the core and yoke of the field magnet.

A B = The cross-sectional area of the field magnet core, assuming that the yoke is at least as large as the remainder of the field circuit. It should be as much larger as other circumstances will admit.

σ = The maximum number of lines of force per square inch which the iron in the field magnet core will carry at the saturation point; divided by the actual number which we may determine to allow per square inch. All that was said in this connection concerning σ_1 holds good here also.

Solving for P we have :

$$\text{P} = z \left(1{,}440 \times 2 \frac{\delta}{\lambda\, b} + \frac{l}{a\, b} \times \frac{tan\left(\frac{\pi}{2}\sigma_1\right)}{\frac{\pi}{2}\sigma_1} + \frac{2\,\text{L}}{\text{A B}} \times \frac{tan\left(\frac{\pi}{2}\sigma_2\right)}{\frac{\pi}{2}\sigma_2} \right)$$

Which immediately gives us the number of ampere-turns which we must have upon our field in order to produce that number of lines of force which we have found by our first formula that the armature must cut in order to produce the required E. M. F.

These formulæ when slightly modified to suit the varied conditions apply alike to cylinder, disc and drum armatures and to bipolar and multipolar machines, and to the different types of fields. In cylinder and disc armatures N t = the number of complete convolutions on the armature ; while in drum armatures N t = twice that number of convolutions.

Comparing these formulæ with the old ones of Fröhlich and Thompson, you will readily see what a great step has been taken towards an absolute and practical basis of dynamo construction.

Fröhlich's old formula for determining the strength of field is :

$$\text{M} = \frac{i}{a + b\, i}.$$

Where,

m = Effective magnetism.

i = Exciting current in series dynamo.

a & b = Constants to be determined experimentally for each machine.

And Thompson's modification of Fröhlich's formula is :

$$\text{H} = \frac{\text{G K } o \text{ s } i}{1 + \sigma \text{ s } i}.$$

Where,

H = Strength of field.

G = A geometrical constant to be determined experimentally in each individual case.

K o = Magnetic permeability when $i = o$.

S = Convolutions of conductor on armature.

σ = Saturation coefficient to be experimentally determined in each individual case.

Leaving at least two series of experiments to be performed in order to determine the value of the constants in each particular machine. While Kapp's beautiful formula gives one a clear and definite idea of the whole problem, and of the part each element performs, and enables one to determine the strength of field from the electrical, magnetic and mechanical data alone for any design of dynamo.

Let us now take an example and practically apply these

Digitized by Google

commercial formulæ. Assuming that we are required to construct a dynamo that will produce a ten ampere current through a circuit having a resistance of forty ohms. Then the required E. M. F. will be $10 \times 40 = 400$. Then $\frac{2\,a\,b\,m\,\text{N}\,t\,n}{1{,}000{,}000}$, must equal 400, assuming that there is no internal resistance in the machine, and, therefore, no E. M. F. consumed therein—an impossible condition in practice, of course, but we will assume it here for the sake of brevity and clearness.

Now it must be clear that a variety of combinations may be arranged whereby the required number will be created, for example, let us assume $a\ b$ to $= 100$, $m = 10$, $\text{N} = 50$, $t = 10$, and $n = 400$; or, let us halve n and make it 200, by doubling N t. Then with either combination we secure the required 400 volts. So that we have now determined how many convolutions there must be upon the armature, how fast it must run, the cross-sectional area of its core, and the number of lines of force that must enter it, which latter is two thousand.

We have now to provide a field for this armature equal to 2,000 commercial lines of force. Now, of course, the magnetic density of ten lines per square inch fixes the amount of iron to be used in the magnetic circuit of the field—the cross-section of each circuit depending naturally upon the number of magnetic circuits provided. It is now only necessary to determine what the exciting power or number of ampere-turns in the field must be in order to produce the required 2,000 lines, and this is done by multiplying the 2,000 into the expression already given, after first substituting for those algebraic factors, the numeric values acccording to the geometry of the particular field in question. Let us now assume these values to be as follows:

$$2{,}000 \times 1{,}440 \times \frac{2 \times 0.5}{10 \times 2_0} + \left(\frac{40}{200} \times 3\right) + \left(\frac{2 \times 24}{200} \times 3\right) =$$

Approximately 16,000 ampere-turns. Then since the current is ten amperes, and the field in series with the armature, there must be a total of 1,600 convolutions on the field magnets, composed of wire capable of carrying ten amperes without unduly heating.

The following are the constants for the magnetic saturation of different kinds of iron:—

	C. G. S. OR ABSOLUTE UNITS.	COMMERCIAL UNITS.
Charcoal iron well annealed (wires)...	150,000	25
" " " " (discs)....	132,000	22
Field magnets, hammered scrap.	108,000	18

I had hoped to be able to present something regarding the mechanical, geometrical and electrical details of construction, but I find the limits of this paper will not admit of it.

2829 Olive Street, St. Louis, Mo.

CHEAPNESS OR ECONOMY?

BY THOMAS D. LOCKWOOD.

THE "Cheap John" in applied electricity dies hard. In fact he doesn't die at all. He is like the party of the second part in the far-famed *hydra*static researches of Hercules; and as fast as you cut off his head in one place, it reappears with an increase in the difference of potential in another.

When I was quite a small boy I took much delight in reading romances of the frontier, and while in a general way I now deprecate as much as anybody, the tendency of our boys to revel in the literature of the buccaneer and the Indian scout, I am compelled to own for the purposes of this article, that at the special period of my life to which I allude, my main reading was "Mayne Reid;" and in the soberer judgment of middle age I believe the romances of that author to be as good and clean, and as desirable for youth as any stories of warfare and enterprise can be.

Now it doubtless seems singular to preface a practical article for a prominent electrical journal, by reminiscences of border tales, but it is not done without a purpose. Of course before sitting down to write this article, I had revolved the subject in my mind; and thinking over the antics of the Cheap John, raised an involuntary mental vision of the parallelism of the said antics, with an episode in one of the Mayne Reid novels, in which a party attacked took refuge, each man behind a tree; and as they were successively driven from one tree it was merely to retreat to another. This pillar to post style of operation is a characteristic of the Cheap John. The C. J. in electricity is of two kinds—one sort consisting of those who—like the late Sir Joseph Porter, K. C. B.,—mean well, but do not know; and the other their converse colleague who know but do not mean well. Inasmuch as the resultant effects of both are the same, both are equally noxious. But the first species is, of the two, to be preferred; for him there is hope; for the latter none, as a Calvinist would say "either in this world or the next." But between them, they cover both sides of the medal.

The electrical Cheap John started into existence with the telegraph, and flourished amazingly in that arena for a long time, especially in America; for until the Yankee finds that he really is out of pocket by original parsimony, he does not believe in laying any more out on an enterprise than just enough to set it going; and will not expend enough of either money, time, or care to set it going at its best; for whatever his motto may be, his moving principle is "Millions for repairs but only a cent for construction"—while the tendency of the sturdy Briton is to build for the centuries to come. It took therefore the successive attacks of Varley, Pope, Brooks, and many others, plus an immense amount of costly experience, before the cheap idea was dislodged from the telegraphic systems of the country. Even then it was and is difficult to keep it permanently out of the field, and wherever any construction was to be undertaken outside of the big corporations, there the Cheap John would be found, ready to suggest that spruce house top fixtures were as good as pine; that blue vitriol of the cheapest grade, was as good as the purest; what difference can a little iron make? That Perizzite covered wire was better than kerite, because it peels so easy you know; that a large wire was an utterly useless expense, and that to pay $80 per month for an operator when you could get any number for $45, was little less than an outrage on the finest feelings of the human race.

These samples of imbecile reasoning being but samples, cannot be expected to do justice to the capacities of Cheap Johnism, but are to be taken only as a small index of his powers. In many cases the people who guide or control the purse strings of even great telegraph corporations, are still unable to look at many items from any other point of view, than that of first cost. Hence the evil I am decrying is only scotched,—by no means killed. In telegraphic construction however, great improvements have been made, and it is fully recognized in that field that to do good work and substantial work, money must be liberally expended, and that good construction with the best materials means the best service, and in the end at the lowest aggregate cost.

Driven from the telegraph tree, the Cheap John would have been sorely bested for a second retreat, and would have been compelled to look for minor fields of usefulness, had it not been for the opportune appearance of the telephone, and the immense impetus thereupon and thereby

Digitized by Google

given, to the extension of electric circuit construction through the land. It is hardly necessary I think that I should here recount in detail the operations of the enemy in his new sphere. It is sufficient to say, that he has fully maintained his ancient reputation, and has successively, and in a temporary way successfully, combated the use of line wire of sufficient size; insulators of all kinds, especially good ones; good batteries if they cost a little more than poor; well made and designed apparatus; and efficient labor if it has to be well paid for. The ground taken, is not in the latter feature usually stated so frankly as it is in some of the former; it is usually assumed in a tacit way that any kind of construction will do for this work; and that as a corollary of this premise, any kind of men will do as constructors, etc.

Perhaps no man has more consistently and stoutly fought these ideas than myself. I have endeavored, and as long as I am in the electrical field will continue to endeavor, to maintain as an axiom, that "whatever is worth doing at all is worth doing just as well as it can be done;" and I insist, moreover, that this is the only true and permanent economy.

The above principle in telephony also is daily becoming more generally acknowledged, and acted upon; the trees which shelter Cheap John in this part of the field are daily becoming fewer in number, and smaller in size so that only small men can hide behind them.

Where now shall the great ones hide their diminished heads?—"Eureka!" say they,—"Here comes the electric light." This has indeed proved a very paradise for the fraternity—who like lotus eaters and tramps, only ask to be let alone. Perhaps the last statement is a little too strong and I do not want to exaggerate; they *do* ask to be permitted to use painted wire and to call it "insulated" wire; they *do* want to run earth return circuits instead of metallic circuits; they *do* ask to use wooden bases for their instruments instead of stone, rubber or slate; and a few more small favors of that kind. And for a while it did look as if the Cheap John had found his permanent refuge in the electric lighting business of the country, where the ridiculously particular constructionist, and the conscientious builder and the skilled electrician might cease from troubling, and where John might be at rest. Again however he is to be dislodged.

Some of the best men practicing in the electrical profession have got into the lighting department, and they clearly see, and deplore the evils of false economy, and have taken and will not fail to take radical steps to uproot the practice.

It will need persistent and persevering effort but it will be done. It will not be done all at once, or in all places at once. Sporadically, the Cheap John will for many a long year yet, continue to operate in lighting, but the handwriting is already on the wall, and in this field also he is being driven from tree to tree, and a good and encouraging feature in the warfare is that the trees are being cut down, so that our friend the enemy, cannot make a detour and occupy many of them. But he is an enemy of resource, and has no trouble in descrying another clump of trees in the electric railway. Here again he is in his glory. He has his war paint on, and although each apparent triumph only assures him ultimately a more complete and irretrievable defeat; although also with him in more senses than one, "the path of glory leads but to the grave" little he recks of that—for the apostle of cheapness of all men lives but in the present.

It seems pretty clear at the present time, that those who are arranging for electric railways are restricted to a quite limited number of modes of getting the electric energy to the motor. We may use a conduit with a slit in it like the mechanical cable roads, and, carrying our conductors in that, run our connecting links, as trollies or brushes, through the slit; or we may adopt the third rail and trailing brush, or its equivalent; we may use secondary batteries and thereby practically carry boiler as well as engine with us; or we may run an overhead circuit and have vertical conductors reaching up to the supply circuit, and by a contact trolly traveling on the wire take off current for the motor carried by the car. I am not going to discuss the comparative merits of these plans. The secondary battery plan seems the most finished, since a certain amount of power is always at the disposal of the motor, and my own opinion is that this plan will constantly gain ground. The test of endurance has yet to be made. Next to this, when well constructed, I think the most practical and promising plan, is that involving the overhead wire. But such a chance for the advocate of parsimony and cheapness is too good to be overlooked.

The overhead circuit wire may be considered as carrying a current of considerable volume under an electromotive force of, say, from 500 to 600 volts. In too many cases (I had almost said in nearly every case) this circuit consists of a single wire. Let us reflect upon the meaning of this. What does a single conductor carrying a current involve or imply? We all know that it implies first of all "an earth return." That is, the dynamo is grounded and the circuit finds its complementary ground through the cars. It also implies destruction and injury—perhaps death, in case of even a slight accident to the single supply wire. It means a tremendous shock to anybody accidentally or inadvertently touching this supply wire, or any conductor connecting with it. It means that whenever this wire, or any part of it, falls, or whenever a telephone or telegraph wire falls over it, a possible loss of property or life. For it must be remembered that we cannot even go through the form of covering this wire (not to say insulating it), because the contact trolly must have a bare conductor to travel on. A consideration of this subject opens up a long vista of lateral possibilities in view of a single serious occurrence of the character foreshadowed above. The public does not discriminate. The press does not discriminate. One accident involving loss of life by reason of the criminal carelessness in the employment of a single wire circuit for this purpose, would do a great deal of harm to every electric light and power interest within a great area of country, besides generating an immense amount of distrust of even perfectly harmless appliances. But this is a rather narrow way of surveying the subject; one human life outweighs all the commercial interests in the country; at least to those who have a direct interest in that life; and in this phase of the subject centres the vital importance of guarding this latest tree from the occupancy of the Cheap John.

As long as his delinquencies only culminated in the waste of property it was well enough to keep still; but when human life is involved (and the Cheap John himself will concede that the human form cannot, when alive, be treated to a strong current of electricity under an E. M. F. of 600 volts with safety) it behooves those of us who stand for the right to use our pens and tongues in protest. My brethren, these things ought not to be. When the remedy is so easy as it is—when it is only necessary to run two parallel wires instead of one; to insulate carefully the lines and dynamo, and to add an additional trolly and connecting wire to the motor, surely this in all cases should be done. It should be made compulsory, for the apostle of parsimony cannot be trusted with an option.

An issue which is of a minor character also needs a brief notice. It starts from the same source and idea: viz.—cheapness at any price. This is the construction of low priced, non-ballasted and irregular roadbeds; soft and spongy foundations, and light rails. I know of a road which is all up hill and down dale, a constant succession of dive holes and "thank you ma'ams;" which is muddy up to the rail surface, and which has rails weighing 35 pounds only, to the yard;—while the man that laid it, knows, if he knows anything, that he should have regular and gradual grades; stone ballast, and rails 65 pounds to the yard. An electric street railway needs just as good

Digitized by Google

and substantial a permanent way as a steam railroad ; the traffic is usually as heavy in the aggregate, making up in constancy and frequency of travel, what it lacks in the direct weight at any one time, of the vehicles traversing it. But the usual statement of the Cheap John is, "that it hardly costs anything," and that "the use of electricity will compensate for any constructional weaknesses."

Of course the moneyed man who invests is not an electrician, and he thinks the advocate of cheapness is, so he accedes to every proposition.

All electricians who believe in the future of electricity ought to unite in a war of extermination against cheapness in applied electricity, wherever they see that it involves inefficiency, and danger.

The Cheap John must reform or go.

The Cheap John cannot reform, therefore—The Cheap John must go.

RECENT IMPROVEMENTS IN APPARATUS FOR OCEAN CABLING.[1]

BY CHARLES CUTTRISS.

In order that the improvements embodied in the instrument you may have seen at the American Institute Electrical Exhibition may be clearly appreciated, it would be well, perhaps, if I were to mention briefly the instruments previously used on the Atlantic and other long submarine cables.

The mirror galvanometer was undoubtedly the first commercially successful instrument ever used on an Atlantic cable, and you are all so familiar with it as a measuring instrument that a description will be superfluous, but perhaps it will be well to point out its defects as an instrument by which messages are received : Firstly, it requires two operators to work it, one to call out the signals, the other to write them down. At a first glance there would not seem to be much room for errors on the part of the *writer*, as the operator is called who writes the message, letter for letter, from the other's dictation, but you will see they *can* easily be made when your attention has been drawn to the similarity in sound between "B," "P," "V," "M," "N," and other letters when rapidly called out. This similarity of course depends largely upon the more or less clear enunciation of the speaker. The liability to misunderstand a letter on the part of the writer tells severely against the *rapidity* of the service as well as its accuracy, for this reason : supposing the writer misses a letter in a code message ; he has no possible way of telling from the context what it should be, he cannot interrupt the receiver to ask him to repeat it, therefore his only course is to omit it and trust to his reader's recollection of the particular word at the end of the message. If he should not remember it, they must then delay the traffic by getting the word repeated from the distant station.

In order to avoid this liability to misunderstand one another, some operators got into the way of calling out the letter and immediately following it with some short word whose initial letter would correspond with the one called out, such as "n" for "nuts," "m" for "mutton," etc.

Another cause for delay arose from the fact that some readers would never trust to the correctness of their writer, but would always stop at the end of a message to scan it over in order, if possible, to detect any error that might have been made. While all these things added to the delay in transmission, one can hardly blame the clerks, for if an error was discovered at headquarters it meant a fine of $\frac{1}{12}$, $\frac{1}{8}$ or $\frac{1}{4}$ of a day's pay, in which all three of the clerks—the transmitter, receiver and writer—had to participate. It was impossible to lay it at the door of any particular one, as each of them would most emphatically deny the soft impeachment of the possibility of *his* making an error.

These causes of delay are now obviated by the use of the recorder, as the operator can always take a second glance at any doubtful signal. Were it not for this liability to error on the part of the mirror clerks, I doubt if that instrument would have been so entirely superseded by the recorder, for its simplicity is a great recommendation. It requires very little skill in its adjustment, and with clerks that work well together, its speed is as great as, if not slightly greater than, that of the old form of recorder.

During the years 1868 and 1869, while I was in Sir William Thomson's laboratory in Glasgow University, his first siphon recorder was constructed. I well remember the instrument, the electro-magnet of which was a ring of iron about one foot in diameter, one inch thick and six inches deep. The signal coil was rectangular in shape, about six and one-half inches long by two inches wide. The electro-motor for drawing the paper slip was an ordinary five or seven armatured wheel with two electro-magnets. It was provided with two bands, one of which

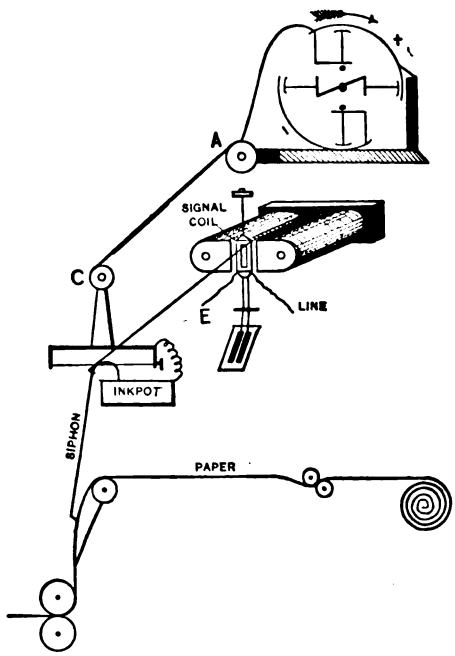

FIG. 1.—"MOUSEMILL" AND SIPHON RECORDER.

turned some wheel work, which drew the paper slip, while the other rapidly revolved a small generator or replenisher which produced by induction static electricity for maintaining the electrification of the ink. This replenisher worked on the same principle as those used for maintaining the potential of the Leyden jar of Sir William's quadrant electrometer. The whole arrangement looked like a medley of different instruments selected at random from a laboratory supply ; yet each had its different part to perform, and it was wonderful to see the results that were obtained, when they were working harmoniously together under the direction of the masterly mind of the man who organized them, and who stands peerless as an inventor, a scientist or a patient instructor.

Some three years later one of the most improved recorders was sent out to the cable station at Duxbury, Mass., and as you may not be acquainted with its construction I will describe it briefly in order that you may more readily understand the changes that have been made in it up to the present time.

The upper part of the diagram represents the "mouse mill," as it is commonly called, which generates the static electricity that is conducted from the drum A containing

1. Read before the New York Electrical Society and the American Institute of Electrical Engineers, Nov. 15th, 1887.

Digitized by Google

a coil spring, along the moist spring and thin wire which you see stretched from A to C; the ink pot is supported on a baked wood arm and is metallically connected with the frame to which the siphon is suspended, this in turn being connected with the milled nut C. Between the respective poles of a strong electro or permanent magnet, there is an oblong piece of soft iron the purpose of which is to concentrate the magnetic lines of force into two fields, through which the two sides of the rectangular signal coil pass. The signal coil which is connected to the cable is suspended by fine silk cord, and care is taken that it hangs perfectly clear from all the iron of the magnetic circuit. Attached to the bottom of the signal coil will be seen two strong silk fibres which pass behind a brass bar, into which a series of shallow notches are cut. To the ends of the fibres are attached lead weights which slide in grooves that are tilted slightly out of the perpendicular, the lower ends being the nearest to the observer; by this arrangement the fibres pass at a slight angle partly around the serrated brass bar, and consequently are held securely from any lateral displacement in any one of the notches in which they may be placed. These weights and fibres hold the signal coil in the magnetic field and prevent its moving in any direction other than a circular one, with the suspension cord as an axis, and any movement in this direc-

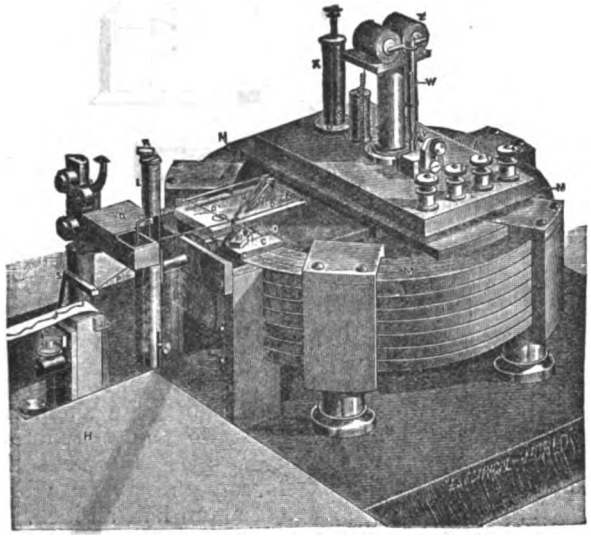

FIG. 2.—THE CUTTRISS RECORDER.

tion is resisted by the two fibres supporting the lead weights, which tend constantly to keep the coil in the centre of the magnetic fields, and, therefore, the movements of the coil are controlled almost entirely by these fibres.

The siphon is attached, as shown, to a brass frame, from the bent ends of which is stretched a fine brass wire kept under a constant strain by a curved spring at one end. To the other end of the spring is attached a milled nut by which the wire can be twisted so as to put a lateral strain on the siphon and its carrier. A small lug projects from this carrier and to it is attached the fibre, the other end of which is fastened to one corner of the signal coil. The signal coil is now twisted slightly in a direction such as to draw the fibre, and with it the siphon, away from the observer. If now the milled head on the brass frame is turned so as to bring the end of the siphon again toward the observer and into the centre of the paper slip which passes in front of its lower point, every motion of the signal coil must be followed by the siphon; and as the fibre is attached so near the strained brass wire the movements of the signal coil will be greatly multiplied.

The marking of the siphon is done as follows: The mouse-mill generates static electricity, which being conducted along the string and wire from A to C electrifies the ink contained in the ink pot, and as the ink pot is insulated, the only way that the electricity can escape is by means of the column of ink contained in the siphon. It does not discharge as is commonly supposed across the air space between the siphon point and the moving paper slip, but the electrified ink draws the siphon which contains it bodily toward the paper (which is slightly damp) until they touch, when the siphon is immediately discharged to earth, and by its elasticity flies back to its former position, by which time a sufficient charge of electricity has accumulated to again attract it to the paper. These movements to and from the face of the paper, which are termed the "vibration," take place at a speed determined by the natural rate of vibration of the siphon, and is generally between 80 and 100 per second; hence we can obtain a record of the potential of the cable as many as 80 times a second; and as these potentials are determined by the operator sending at the distant station they constitute the signals at the receiving stations.

The arrangement adopted in this instrument to regulate the supply of static electricity to the ink pot was by interposing a piece of moist string between the spring drum A and the milled head C. This string had a fine wire attached to one end, so that by turning the milled head in one direction the length of the moist string interposed between the two points could be varied and likewise the electric discharge to the ink pot.

This arrangement worked very well at Glasgow, where the atmosphere is to a great extent saturated with moisture; but in this country the string was soon dry, and then the ink would not be electrified, and consequently the record would fail. To remedy this defect I made use of the brush discharge by connecting an adjustable wire provided with a sharp point to the drum A, and a flat piece of brass to the milled head C. This was found to work perfectly, and that principle has been adopted in all electrified ink recorders made since that date. But we soon began to experience a greater trouble than the one before spoken of, and one that still exists in all recorders using static electricity as a means of vibrating the siphon; that is, the great difficulty experienced in generating a supply of static electricity during damp weather, and in keeping the arm that supports the ink pot dry. Everything will work beautifully in nice, fine weather, but during the moist, clammy dog days of August, and the foggy days that are liable to come on at most cable stations without a moment's warning—then it is that trouble of the most aggravating description falls upon us. Suddenly the record fails. Examination shows that the generator or supporting arm of the ink pot has got damp. Lamps are lighted and placed near the instrument, *sometimes* with a satisfactory effect, but oftentimes not. In the latter case there is nothing for it but to stop working the recorder and go over to the mirror instrument while the generator is being dismounted and thoroughly dried; but meanwhile valuable time has been lost, and business has been delayed.

Everything imaginable was tried in order to overcome this difficulty, but without success, and at last we realized that in order to make the instrument more reliable, we must find some way of obtaining a record without depending upon the electrification of the ink.

The first suggestion came from Mr. John Gott, the superintendent of the St. Pierre station, namely, to make the siphon a shade larger than usual, and put a few camel hairs in the tube at its marking point, and, as it were, paint the record on the paper slip. This worked very well, but the siphons would occasionally clog up, as we were at that time using commercial writing ink. The hairs acting as a strainer would arrest the larger particles. When you realize the smallness of the tube, the bore of which is only $\frac{1}{100}$ of an inch in diameter, the wonder is *not* that it got clogged up, but that the ink would flow through it at all. The next step in advance was taken one day when the hairs accidentally came out of a siphon, the point of which happened to be particularly smooth and square with the

Digitized by Google

paper; it was then found that a very good and reliable record was made by carefully adjusting the paper up to the point of the siphon until it touched it. The paper was then drawn slightly backward again; the capillary attraction being sufficient to keep the siphon from leaving it, while at the same time the friction was greatly reduced. This manner of recording has been used ever since that day on the D. Y. section of the "69" cable, and it has also been adopted on many others whose length does not exceed 1,000 miles, but they must have a conductor of low resistance.

About the year 1876 I constructed a recorder of the most simple kind, in which the signal coil was pivoted and to which the siphon was directly attached. The controlling springs or fibres were dispensed with by attaching a small piece of iron to one corner of the coil and bringing it under the influence of another movable piece of iron on one of the pole-pieces of the electro-magnet. It was during the construction of the instrument that I first endeavored to vibrate the siphon mechanically and also by means of magnetism, but at that time I did not succeed in getting a perfectly straight and steady line. As the mode of working before described was so satisfactory, I did not pursue my experiments any further, for inasmuch as I had eliminated the troubles incident to the use of electrified ink at the Duxbury station, I did not realize that they still existed at other stations where the methods we adopted could not be practiced, owing to the greater length of the cables. However, Mr. Dickenson, of Heart's Content, N.

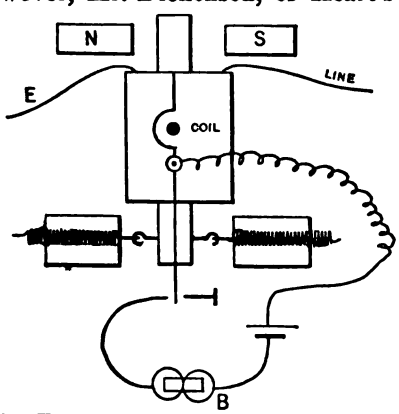

FIG. 8.—THE ALLEN AND BROWN CABLE RELAY.

F., was not idle, and during the year 1885 he invented and patented a method of vibrating the siphon mechanically. The method practiced by him was to prolong the cradle carrying the siphon. He then attached a magnet and armature at the end of the frame carrying the strained wire, and connected the prolongation of the cradle to the armature by a silk fibre. When a battery is connected to the magnet and its circuit is rapidly interrupted, the motion of the armature is communicated to the siphon by means of the connecting fibre. What success this invention has met with in practice I am unable to state.

When I became identified with the Commercial Cable Company, I found that it was decided to prolong their ocean cable, which landed at Coney Island, into the heart of the city by means of an underground cable, and to use a recording instrument upon it. The type of cable and the high rate of speed at which it was to be worked required that the instrument should be of the most sensitive class, hence electrification of the ink or some other device for preventing friction between the siphon and the paper slip must be used. Therefore, as nothing else offered, we adopted the electrified ink recorder. It was not long before the old troubles were encountered, as the office was very small, and we were obliged to keep the windows open for ventilation. Consequently it would be only a short time after a rainstorm began before I heard the old cry, "the ink has failed." This was such a constant source of trouble that I determined to try again and find some other way of vibrating the siphon. After mature thought, and with the experience gained from previous failures, I was convinced that, in order to make any device work successfully and still leave the instrument as sensitive as by the use of electrified ink, the siphon must hang perfectly free and not be retarded in its lateral movements by any extraneous fibres, and that, at the instant it touched the paper to leave its clot of ink, the point must be locked, as it were, to prevent its rebounding laterally, in case the surface of the paper should be slightly irregular. The only resource seemed to be magnetism applied as nearly as possible in the same manner as had previously been practiced with electricity. I determined therefore, that the part of the siphon under its influence must be the marking point. The question then arose in my mind as to the possibility of attaching a sufficiently large piece of iron to the end of the siphon without weighting it to a degree that would be detrimental to the clearness of the signals, by reason of its increased inertia. Another very doubtful point was, would it be possible to construct a magnet with a field of force so uniform that a siphon tipped with iron would vibrate at right angles to the plane of its polar face without any tendency to irregular lateral movements, or in other words, if it were placed near the edge of the magnet, would it not have a tendency to be drawn toward the centre? When the idea was first conceived, I must admit that I had the greatest doubts of its success. But nevertheless I determined to give it a trial, so I attached a toothed wheel to the shaft of an electro-motor, so as to act as a contact breaker for the local circuit, containing the electro-magnet with which it was desired to vibrate the siphon which had its point armed with a small piece of iron, and was attached to the usual strained wire suspension of a recorder, held firmly in a vice on the same table upon which the motor was running. The siphon was now approached by the rapidly vitalized electro-magnet, but without its showing any signs of vibration. Thinking that perhaps the battery was not strong enough to energize the electro-magnet sufficiently, more was added to the circuit, but still without effect. The electro-magnet was then removed, intending to replace it with a more powerful one, but the motor was still running; so imagine my surprise the next time I looked toward the table when I saw the siphon vibrating beautifully, describing an arc of about half an inch.

Thus without any apparent cause it was doing of itself what I had vainly endeavored to *make* it do with a powerful electro-magnet. However, the solution of the mystery was soon arrived at, as I accidentally touched the table and felt a very slight but regular vibration, then everything was clear and I saw that the motor put the table into a state of vibration, the rate of which was exactly equal to that of the natural rate of the siphon; which, therefore picked up the vibrations and showed them in a greatly magnified form. I realized plainly from this experiment that to make the siphon vibrate by magnetism all that was necessary was to vitalize the magnet at a rate equal to the natural period of the siphon. In a short time by means of a second experiment I succeeded in producing these vibrations by magnetism and found them just as regular at the edge as at the centre of the magnet, the siphon not having the slightest tendency to move laterally from any position in which it was placed.

It would be uninteresting to you to follow me through all the numerous experiments that were made before the vibrator was perfected. But I will mention one instance that shows how simple may be the cure for the unforeseen difficulties that constantly arise when one is trying to perfect an instrument. When the first vibrator was tried, in which mercury was used to alter its rate, it was noticed that the record would fail with great regularity for about an inch. The trouble was located in the glass tube, and was due to some of the mercury climbing up it under the influence of the vibration and then falling back to the

Digitized by Google

main body. This, of course, made variations in the rate, and was fatal to the instrument unless it could be remedied. I tried to put weights on the top of the mercury, but they would not work satisfactorily, and at last when almost in despair, the remedy was found in two drops of glycerine. The viscosity of the glycerine, I find, is so great that it prevents the column of mercury breaking up.

This method of vibrating the siphon by magnetism has been applied to all the Thomson recorders in use on the Commercial Cable Company's system for upwards of a year with the greatest success. Failures of the ink now are a thing almost unheard of, and the recorder, so far as ink failures are concerned, could, if necessary, be worked under a shed during a rainstorm or fog, as well as though it were in a warm room.

In all the Thomson recorders that I have seen the movements of the signal coil are controlled by the lead weights before spoken of, and the clearness of definition and shape of the signals depend almost entirely upon the adjustment of the fibres which are attached to the signal coil and support these weights. In practice more or less trouble is found in maintaining such an adjustment as will give the best shaped signal. This is owing to the dust which collects upon the weights, wedging them fast in the grooves. Consequently any change of temperature, or humidity of the air, will alter the tension on one or both of the fibres, and thus oftentimes render the signals unreadable. So much trouble was experienced from this cause at our Canso station that it led the superintendent, Mr. S. S. Dickenson (who was ably seconded by Mr. J. C. Upham, the mechanician), to devise an adjustment in which the weights were discarded and a spring used in their place. The fibres could also be spread to any desired extent, and as the strain on both of them was exactly the same, the signal coil was always in a truly central position in the magnetic field.

Since this improvement has been applied to the instruments the adjustment has rarely been changed, and, what is of still greater value, a decided increase of speed has been effected. With the exception of these recorders, it is always necessary to stop work when it is desired to make any change in the adjustment of the controlling fibres, as they are very inaccessible. This, together with their occasionally breaking, led me to try and construct an instrument in which these difficulties would be removed. The result has been the instrument now on exhibition at the American Institute Exhibition.

The siphon P is a fine glass tube about one hundredth of an inch diameter, one end of which writes upon the paper slip J, and has attached to its point a piece of No. 30 iron wire about one-eighth of an inch long, which serves as an armature and is controlled by the impulses of the magnetic table T over which the paper slip passes. The impulses of the magnetic table are controlled by the vibrator, which is placed on the large permanent magnets M M, and consists of a glass tube W which is connected by a tube of india-rubber to the mercury reservoir X. The glass tube is supported by a steel rod carrying a spring contact point V, and carries an armature, seen opposite the poles of the small electro-magnet Z. When a battery of three or four gravity cells is connected to the terminals 1 and 4, the glass commences to vibrate at a rate determined by the height of the column of mercury in the glass tube W, the height of which can be regulated by turning the milled thumbscrew at the top of the mercury reservoir which connects with a plunger within the latter.

From the terminals 2 and 3, two wires connect to the electro-magnet of the magnetic table T. Thus every time the contacts at B are closed the table is energized and the siphon is drawn down to the face of the paper by the attraction of the magnetic table for the small piece of iron which is attached to the point of the siphon. If the impulses given to the siphon are in accordance with its natural rate of vibration a succession of fine dots of ink will be left on the paper in a perfectly straight line so long as the siphon is not moved laterally by the coil R and a supply of ink is maintained in the ink pot Q. Should the impulses given to the siphon by the vibrator not be in accordance with the natural rate of vibration of the siphon, it will not vibrate and the record will fail. But by manipulating the plunger in the tube X, the height of the column of mercury W is varied, so that the rate of the impulses can be maintained anywhere between 60 and 100 per second. Hence any siphon that would be suitable for the instrument can be controlled, as its rate will lie within these limits. When the proper height of the mercury has been once determined, which is generally found in less than half a minute, the siphon will continue to vibrate until it is broken or removed for other causes.

The signal coil R, which is moved by the currents transmitted from the distant station, is pivoted at the bottom and top, B, in agate bearings, and is free to move in the annular space between the poles of the permanent magnet M. On the top of the coil there is attached an aluminum extension, E, which has a narrow slot at its upper end through which passes the regulating fibre D′, one end of which is attached to a rigid support, O, the other end being fastened to a flexible spring, F. The strain on this spring and this fibre is regulated by moving the index G′, and the strain thus produced controls the movements of the signal coil R. Close to the point E and at right angle to the fibre L′ there is another fibre, D, one end of which is attached to an exceedingly delicate spring, F, the other end is fastened to an extension from a fine brass wire contained in the tube L, to which the siphon is secured. The upper end of this strained wire is attached to the thumbscrew K, so that by turning the latter the siphon can be moved laterally over the face of the paper to any required position.

Thus it will be seen that if the siphon is moved off the paper slip toward the front of the instrument when the fibre D is strained by moving the spring F outwardly, the siphon can be pulled by it into a position over the centre of the paper; the torsion on the strained wire and the strain on the spring now balance each other, and if the two cross fibres are fastened together at a point as near as possible to the extension E, any movement of the coil will be multiplied and transmitted by means of the fibre D to the siphon. By lifting the fibres out of the slot E and turning the coil toward the front of the instrument, the coil and part of the pole-piece C can be removed from the instrument without disturbing any other part, and, when replaced, no readjustment will be necessary.

It has been suggested to me that pivoting the coil was a step backward, as it introduced friction, and would mar the definiteness of the signals. I can only say, in reply, that when the instrument is adjusted, and giving good signals at a rate of 30 words per minute, I cannot detect the slightest friction. If I deflect the siphon laterally only the width of a hair it immediately, on its release, returns accurately to zero, which it certainly would not do if there was any friction worth speaking of in the pivots.

I have received good signals on this instrument at a speed of 30 five-letter words per minute, over our New York Canso cable, which has a length of 980 miles, capacity of 231 microfarads and copper resistance of 13,680 ohms.

I do not intend to stop at this speed, but think that with the next instrument, in which some of the parts will be slightly modified, a speed of 25 or 26 code words a minute will be attained over our long sections, which have a length of 2,740 miles, capacity 874 microfarads and copper resistance 6,967 ohms.

I will not take up much more of your time this evening, but as the title of this paper is so broad I am loth to leave the subject without mentioning the great advance that has been made during the last few years in the working of the Morse system on cables.

Before the year 1879 no section of the Atlantic cables

Digitized by Google

had been worked by any other method than mirror or recorder. That the Morse *has* been successfully introduced on two sections is due to the determination and persistance of Mr. G. G. Ward, of this city, at whose request Mr. T. J. Wilmot, now superintendent at Waterville, Ireland, applied himself day and night to the task of originating a translating device by which, in the year 1879, Torbay, in Nova Scotia, was put in direct communication with New York.

This same device, in which the Allen & Brown relay is used as a receiving instrument on the cable circuit, is now worked on our Rockport and C. S. section. The difficulties that were surmounted will be better appreciated when I mention that the length of cable in circuit is 610 miles, with an inductive capacity of 168 microfarads and a copper resistance of 8,482 ohms. The total circuit, inclusive of the land line, is 942 miles.

The Allen & Brown relay consists of a coil through which passes a soft iron core. The ends of the core project into the magnetic field produced by the permanent magnets N S, and are consequently polarized by them. In the diagram, the mark in the centre of the rectangle represents the axis of the coil. If, now, we connect the coil to the cable circuit and have two fixed contact points for the local circuit, as in an ordinary relay, the first impulse, of say the letter "s," which consists of three dots, will close the local circuit; but as the cable does not lose its charge rapidly, as is the case with a land line, the coil will not return to the back-stop and be ready to close the circuit again with the second impulse of the letter, but will be held fast to the front contact, keeping the sounder closed all the time. This, of course, will prevent any more signals being received over a cable, and some means had to be found by which the armature tongue would open the circuit whenever the potential of the cable fell ever so slightly from its maximum. This was accomplished by allowing the armature tongue, which is called the "jockey," to have a movement around an axis of its own. It was therefore pivoted, as shown, slightly in advance of the axis of the coil; you will now see that if the two points which control the local circuit are adjusted very closely together, allowing the end of the jockey a play of only $\frac{1}{1000}$ of an inch, every time that the coil falls back toward its centre position (after having been deflected by the receiving current) only $\frac{1}{1000}$ of an inch, the local circuit will be opened, and *vice versa* any increase in the potential sufficient to move the coil the same amount will again close the local circuit. By this means the coil is moved sometimes considerably in one direction, and, although by watching it very closely, no backward movement can be detected, the jockey will open the circuit, sometimes two or three times, proving that there has been corresponding falls in potential. On the axis of the "jockey" is a very delicate spring which can be pressed down by a small nut so that just sufficient friction is maintained on its jockey to enable it to close the local circuit firm enough to pass the signals to the local circuit.

Some few changes have been made in the jockey of the relay by the superintendents at the terminal cable stations —Mr. Dickenson at C's and Mr. R. Hearn at Rockport— until at last such perfection has been arrived at that the signals are passed from Canso to New York in such a perfect manner, that none but an expert could tell that there was any cable in the circuit. This is, I believe, the longest section of cable on which the Morse system is worked, and although repeated efforts have been made to attain the same results on a cable only about 100 miles longer, the retardation was so severe that the speed attained was too low to allow this system to be adopted. Gentlemen, I thank you for the patience with which you have listened to me this evening, and I regret that time will not allow me to touch on several other interesting branches of investigation, such as curb sending, the duplex, automatic transmission, etc. But the object of this paper will have been attained if you realize that, although seldom heard from, there *are* many patient investigators in our remote cable stations, and that to their unflagging energy is due the fact that we are now easily able to handle a bulk of business that would have staggered us a few years ago, and do it with so little delay, that a message can be sent from New York and delivered in London in less time than you can send one from down-town to Harlem.

USES OF ELECTRICITY IN MILLS.

AN ADDENDUM.

BY C. J. H. WOODBURY.

THERE are some applications of electricity in mills which are so exceedingly common and prominent that they escaped notice, and therefore were not referred to in my previous article on the subject.

Supposing that we were to revisit the mill for the purpose of examining some applications of electricity which had escaped record on the previous visit: our entrance to the office would be stopped by the fact that the door knob would ineffectually turn round and round without catching upon the latch until someone touched an electric button which connects by wires to the latch and causes the mechanism to engage with the knob, permitting the knob to be turned just once, and requiring another pressure on the electric button to turn the latch again.

The time used in large mill corporations is distributed by synchronous electric clocks used in most of the rooms, while the most careful measures are taken in every large manufacturing city to secure the distribution of accurate time. For many years the corporations in Lowell had a contract with the Harvard Astronomical Observatory by which they received the standard time once a day; and in about all the mills in New England arrangements are made by which they obtain the exact time as it is signaled over the wires once a day. Those mills which are engaged in manufacturing standard print cloths, which are subject to fluctuations in price, are frequently provided with stock tickers showing the daily quotations of print cloths and cotton.

Electricity is not used for lighting gas jets in mills as in the method of pendant sparking apparatus used in houses, or the static electric apparatus used in theatres, unless the former kind may be applied in the office. There are two types of electric gas lighters, one being the well-known arrangement of chloride of silver battery, a primary coil contained in a single hard rubber case, and furnishing a succession of sparks over the burner and igniting the gas. Another type contains two vulcanized rubber cases, one of them holding the bichromate of potash battery, and the other containing a primary coil. As in the former case, a motion of the thumb upon a switch produces a spark and ignites the gas. There is also a portable static machine for lighting the gas, but it cannot be used in rooms where there is sufficient escaping steam to render the air humid.

Telemeters are used for transmitting by electric means any form of observation which is desirable, such as the height of water in the source of supply furnishing power to the mill, the pressure of steam, or the condition of the elevated water tanks. One of these instruments was of especial value at Holyoke in notifying the engineer in charge of the water power, of a forthcoming rise of water in the river three hours before it had reached the dam at that city.

In the allusion to the method of electric clocks for recording the work of the watchman, there was an omission of reference to the alarm which can be sounded at the house of the superintendent, or the watchman's room, or any other convenient place if the watchman is late at any

Digitized by Google

point in patrolling his course, the limit of such tardiness being usually fixed at twenty minutes, and the operation of the device is automatically produced by the mechanism of the watch clock.

Another form of thermostatic alarm for a different purpose in dry rooms, is the well-known metallic thermostat, in which a straight or coiled strip of metal, by its expansion or contraction under changes of temperature, causes an electric circuit to be closed and an alarm to be given whenever the temperature rises or falls beyond certain limits. The usual combination for such thermostats is a bar or base of vulcanized rubber and a bar or strip of steel.

The electricity used in mills for telephones and other signaling purposes is frequently obtained from large magneto machines, especially in paper mills where the continuous operation of the beating engines ensures that the electric current will be ready for use at all times, irrespective of ordinary working hours.

Magnetism serves several useful purposes in manufacturing establishments, for separating brass and iron filings and turnings in machine shops, for removing bits of metal from the paper pulp in beating engines of paper mills, and also for removing pieces of metal in grain mills; and, so far as I am aware, these devices are all dependent upon permanent steel magnets instead of upon the use of electro-magnets, which would give them a much higher magnetic attraction and would never be required except when the machinery was in operation, and therefore would allow the production of the source of electricity by a generator whenever it was needed.

The use of electric motors in mills has grown very slowly, partly, no doubt, on account of the delays in furnishing electro-motors which could be applied in conjunction with electric illuminating systems. They have, however, proved to be of great convenience and cheapness for the elevators in storehouses situated too far away from the prime mover of the mill to allow the application of power by ropes or shafting in the ordinary manner. Electric motors have also been used for driving light machinery, such as winders for spool cotton, which it is frequently desirable to place apart from the main portion of the mills and inconveniently situated in respect to the power; and this permits that they should be placed near the packing and shipping department.

Several years ago I called the attention of a prominent electrician engaged on the question of electric transmission of power to the important purposes electric motors could serve in operating the calico printing machines, where it is necessary that each machine shall be driven at periods and rates entirely independent of its neighbors and based solely upon the conditions of the fabric and pattern. This work is now done by independent steam engines, which take up valuable space and render the room so hot as to interfere, I believe, with the best work of the men. It is here that there is an opportunity for electric motors especially designed for such purposes, and there have been recent accounts in the foreign electrical papers of motors designed and applied in this specific manner in England.

There is one new use of electricity which has not yet reached a general application, but which will, no doubt, become a most valuable adjunct in every repair shop in the country, and that is the system of electric welding invented by Professor Elihu Thomson.

Some of these applications of electricity have had but limited service and are scarcely known beyond where they have been tried in almost an experimental manner; others are in general use rendering valuable service, and have rewarded their inventors in the most liberal manner.

Wherever in any process of manufacturing there is a demand for extending the capacity and use of the human senses in the perception of size or temperature, there is ample opportunity for the exercise of electrical invention in the production of mechanism to fulfill that office.

DYNAMIC ELECTRICITY.

BY CARL HERING.

(Concluded from page 434.)

CHAPTER X.—EXAMINING MACHINES.

After a dynamo is completely finished it is well to subject it to a thorough examination, not only for the purpose of being assured that it will run properly, but also to find out whether it is properly proportioned in all its parts, or whether it could have been improved in some of its proportions, and if so, what proportions are faulty, and to what extent they could have been improved. It will likewise show whether the machine is run under the most advantageous conditions, and if not, what changes would enable it to be run so. The data which may be obtained from such examinations when properly made, will often be found to be of great assistance in designing other machines of different sizes, proportions and styles.

As these tests may sometimes show faulty construction or proportioning, it is well to make some of them while the machine is wound with temporary field magnet coils, that is, before it is finally wound with its proper coils. This applies more particularly to the saturation and the heating tests, as also to the test for the effect of the counter magnetization of the armature. Some of these tests will, of course, be different according as the machine is separately excited with temporary coils and an exciter, or whether it is self-exciting, as a shunt, series or compound machine.

Among the most important of these tests is the determination of what are called the "characteristics" of the machine. These are the results of a succession of tests plotted in the form of a curve, which then shows graphically some of the more important features of the machine.

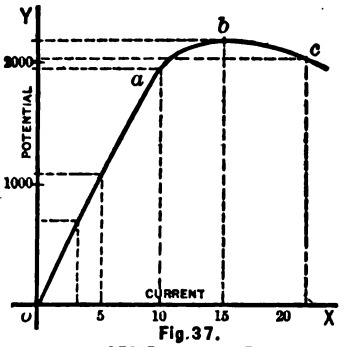

Fig. 37.
SERIES MACHINE.

Such curves will show at a glance how one quantity, say the electromotive force or current, will change, when changes are made in another quantity, say the external resistance, speed, or magnetization. For instance, let a series wound machine be run at a constant speed, and let it discharge through a succession of different resistances (which need not be measured) varying from a very large one to as small a one as the machine will stand without injury. Measure both the difference of potential at the terminals, and the current, for each resistance. On a piece of cross-section paper lay off these different currents to any convenient scale, along the horizontal line o x, figure 37, from o to the right; similarly lay off the differences of potential from o to Y on the same or on any other convenient scale. The intersections of the vertical and horizontal lines drawn through each two corresponding values of the current and difference of potential respectively, will give a series of points, the curved line *o a b c* through which will be the characteristic for the current and potential of that machine. This curve shows at a glance that when the currents are small the potential increases rapidly with an increase of current; and as the first part of the curve is a straight line it shows that the potential increases in

Digitized by Google

the same proportion as the current. When the current has been increased to a certain value, in this case ten amperes, the potential no longer increases so rapidly, and at fifteen amperes it has reached a maximum limit; for still greater currents the potential falls again. From this characteristic the following deductions can be made. Barring other considerations, this machine should not be run normally for currents or potential less than those of the point *a*, for if it is, the curve shows that it is not running to the best advantage, or in other words, the machine is larger than it need be. It should not be run much beyond the point *b*, as that is the maximum point for the potential, and it is probable that the machine heats greatly beyond this point, and therefore runs at a disadvantage and with poor efficiency. Furthermore, for values of the currents between *a* and *c* the machine will give a nearly constant potential for different loads, the variations in the potential being less the nearer this part *a c* of the curve approaches a horizontal, straight line. The curvature at *a* is due to the iron having become saturated, and shows that a greater current in the series coils than that for *a* has little effect in increasing the magnetism, and therefore, the potential; series wound machines for arc lights in series may therefore be run above the point *a*, because changes in the current due to poor regulation of the lamps, will then have less effect in causing the potential to change, in other words, the magnets are less sensitive to changes of current beyond the point *a*, and, therefore, the current will be more nearly constant.

In the same way the characteristic may be drawn between the known external resistance and the potential, showing how the latter will vary for different external resistances. Similarly, that for the resistance and current will show how the latter will vary with changes in the former, and between what values of the resistance the

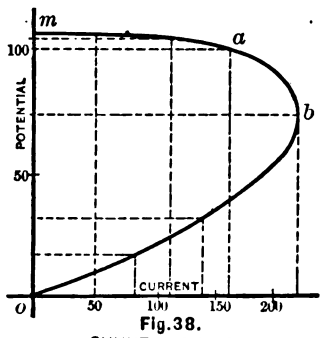

Fig. 38.
SHUNT MACHINE.

current will be nearly constant. By running the machine at different speeds and discharging through the same fixed resistance, the characteristic for the speed and current, or speed and potential may be obtained. Or if the resistance is also varied for each speed a succession of curves, like that in figure 37 will be obtained, showing the effect of changes of speed. But in general, characteristics involving changes of the speed, though interesting and instructive, are of less practical value, as it is assumed at the outset that the speed is as great as mechanical considerations will permit, as pointed out in another chapter. The speed characteristics become important when it is desired to shift the curved part *a b* of the characteristic nearer to or further from the point o.

A characteristic curve can be obtained for any two varying quantities which depend on each other, and for only two, as for instance, the current and potential; all other quantities (as for instance, the speed) should remain the same, except, of course, such quantities as the external resistance in this particular case, which must be changed to produce a change of current and potential. If it is desired to vary a third quantity, such as speed in this case, separate curves must be drawn for successive values of the speed.

Similar characteristics cannot be compared with one another, unless reduced to the same scales, for it is evident that two characteristics drawn to different scales, may be identical in appearance and size, but still represent totally different results.

The general characteristic for current and potential of a shunt machine, for different resistances, is shown in figure 38. Starting first with open circuit, that is with an infinitely large resistance, and, therefore, no current, the machine gives its maximum potential *o m*; with a gradually decreasing resistance the current increases and the potential falls slightly; it will continue to fall proportionately to the current as the resistant decreases, as far as the line *m a* is a straight line. At *a* the potential falls rapidly, and at *b* the maximum current is reached; by decreasing the resistance still more, the current and potential both fall until the resistance is zero, that is, until the machine is short circuited, when both are zero. This shows that there is a maximum current *o e*, which can be obtained from a shunt machine, and that the maximum potential *o m*, is when the machine is run on open circuit. It, furthermore, shows that if the armature can stand the maximum current *o e*, then no adjustment of the external resistance will injure the machine. This is not the case with a series machine which would soon be destroyed when run on too small a resistance, as seen from its characteristic. A shunt machine is never run in practice between the points *b* and *o*, because, as could readily be proved, the same output could be obtained from the same armature and frame with a much less expensive winding of the field magnets; it would therefore be very uneconomical, as far as first cost is concerned, to run a shunt machine at the part *b o* of the curve. The best machines are seldom run near the point *b*, being usually limited to a short part of the line *m a*. It would not be safe, therefore, to diminish the external resistance too much for fear the maximum current *o e* might be too great for the armature.

It will be noticed that the part *m a* is nearly straight, and that, therefore, the potential falls regularly but slowly even for wide ranges of the current, and that if this line could be made to be horizontal the potential would be constant for the corresponding values of the current from *o* to *o f*. The inclination of this line is due to the fact that some of the electromotive force is absorbed in the armature itself to overcome its internal resistance, and that this amount increases with the current. If, therefore, the armature resistance be practically zero, there would be no fall of potential in the armature, and, therefore, this line *m a* would be horizontal, in other words, the shunt machine would have a constant potential for greatly varying currents. This, however, would necessitate having either a very large armature or a very intense field, both of which add to the cost of a machine. Instead of avoiding this fall of potential, it may be neutralized or balanced by a simple combination of the two characteristics, figures 38 and 37, that is by a combined shunt and series winding. In figure 38 the potential at first falls in a regular proportion, while in figure 37, it rises in a regular proportion, therefore, by a proper combination of the two their total action may be made to keep the potential constant. To do this the part *o a* of the series curve should make only a small angle with the horizontal, as *o a*, figure 39, which is accomplished by using only a few series windings. This angle should be such that the increase of potential *f a*, figure 39, due to the series coils for any current, *o f*, should be equal to the fall of potential, *g a'*, due to the shunt coils, for which *m a'* is the curve. The resulting action of the two will, therefore, be a constant potential for all currents from zero to a certain limit, *o f*. The characteristic for this compound machine will therefore be *m g*. How to proportion these two sets of coils to obtain this result has already been explained in chapter viii. It will be noticed that the shunt characteristic in figure 39 curves downwards for currents greater than *o f*, and, that therefore, that for the compound machine *m g*, will also curve down-

Digitized by Google

ward beyond g. This shows that a compound machine should be used only in such parts of the two characteristics, $o\ a$ and $m\ a'$, as are nearly straight lines, for up to this limit only, can it be made to have a constant potential for different currents. It can readily be shown that the curving of the line $m\ g$ at g, is due chiefly to the magnetic parts of a machine being nearly saturated; a compound machine should therefore be run below the saturation point, as explained in chapter viii.

This leads to another and very important test which machines should be subjected to, namely, the test for

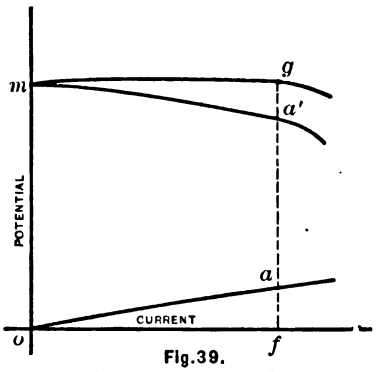

Fig.39.
COMPOUND MACHINE.

saturation. This test is best made with temporary coils on the magnets, excited by a separate exciter the current from which can be varied between wide limits. It can also be made with the finished coils of a machine if the exciter has the proper potential for these coils. It can also be made with shunt or series machines by letting them excite themselves, but this is generally less satisfactory, at least when it is desired to test the magnetic qualities independently, especially for series machines, as it is preferable and in some cases essential to have no appreciable current flowing in the armature.

To conduct this test, run the machine on open circuit at a constant speed and excite the magnets with currents varying successively from a very small current to as great a one as the magnet coils will stand. Set the brushes to the position of greatest potential and measure in each case the potential at the brushes and the exciting current. This potential will then be a correct measure of the useful magnetism of the field for each case, while the exciting current will represent the cost of generating this magnetism. Lay off these values to any convenient scale and find the characteristic curve as shown in figure 40. It will generally be found that this curve resembles somewhat that of a series machine, figure 37, being at first nearly a straight line, showing that the magnetism increases rapidly with the exciting current; it then curves, showing that it no longer increases rapidly, or in other words, that the iron has become saturated. If this curving of the line is short and decided as in $o\ a$, it shows that the iron parts, including cores, armature and yoke pieces, are all saturated about the same time, and are therefore properly proportioned as far as saturation is concerned. If, on the other hand, the curve is gradual with little or no straight part, as $o\ b$, it shows that some of the iron parts are saturated before the others. This, in some cases, as for compound machine, is objectionable, and should be remedied by increasing the iron parts of smallest cross-section, except when the machine is to be magnetized only as far as the curve is tolerably straight. Whenever the smallest cross-section of the iron parts is in the yoke piece, it should, of course, be remedied for any machine, but wherever, as is usually the case, it is in the cross-section of the magnet cores, or in Gramme ring machines, in the armature core, it is a question easily determined by trial calculations, whether the gain in the economy of magnetism obtained by increasing this cross-section, is justified by the additional expense of the increased amount of wire, the greater size, weight and resistance of the armature, etc., which this necessitates.

The end of the tolerably straight portion of this characteristic shows the limit at which magnetism is produced economically. Whether the machine (shunt or series, but not compound) should be run at a higher degree of magnetization can readily be determined by trial calculations; it evidently depends on whether the gain in the output of the machine is justified by the poorer magnetic economy (*i. e.*, lower efficiency of the machine) and the other objectionable effects of over-saturation.

Regarding the details of this saturation test, it is evident that a reliable voltmeter with a large range is required. It is not necessary to know the actual values of the readings in volts, but it is necessary to know the relative values, that is, the voltmeter should either be one whose deflections are proportional to the potential, or else one in which the relative values of the deflections are known. If the voltmeter has only a small range of readings the machine may be run at different speeds, the speed being made lower as the exciting current increases. To correct the readings for this change of speed, it is sufficiently accurate to assume that the voltage is proportional to the speed; this enables all the readings to be reduced to one speed, and applies therefor as well to the first method if the speed during that test has varied slightly. Instead of changing the speed to enable a voltmeter of small range to be used, successive resistances equal to that of the voltmeter may be used in series with it, thus reducing the readings to one half, one-third, etc.; but this is not to be recommended, as these resistances should not only be equal to that of the voltmeter, but also have the some self-induction, and unless they are carefully made it is difficult to make both the resistance and self-induction the same. If the voltmeter has no appreciable self-induction this objection does not apply. In the absence of a suitable voltmeter any indicator of small currents, as for instance a test galvanometer, may be used together with a suitable adjustable resistance, such for instance as the plug resistances box accompanying a Wheatstone bridge. Connect the resistances in series with the test galvanometer and adjust them so that any suitable deflection is obtained for the first reading. For any other potential adjust the resistances until the deflection is reduced to the same reading, then, knowing the resistance of the galvanometer, the potentials will be proportional to the total resistances, including that of the galvanometer and that in the resistance box.

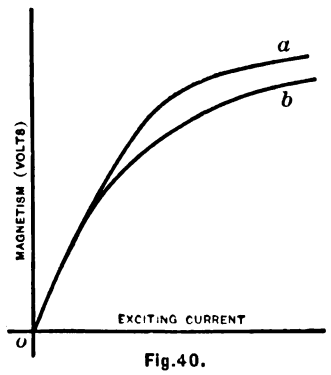

Fig.40.
SATURATION CURVE.

If this saturation test is made with a shunt machine, that is, self-exciting, the speed should be somewhat greater than the normal in order to get the characteristic curve through the saturation point. For the same reason if the machine to be tested is series wound it should be tested for a greater current than the normal, but its speed may be much less, the external resistance being made smaller. It is preferable in this case to keep the armature current constant, and therefore vary the exciting current by variably shunting the current around the magnets.

In this saturation test the exciting currents multiplied

Digitized by Google

by the number of windings in the exciting coils gives the ampere turns. This might have been laid off along the horizontal line in figure 40 in place of the exciting current, but as the number of windings is constant it would be equivalent merely to changing the scale of the diagram, but would not alter the relative proportions between different parts of the curve. If the coils used in this test are different from those to be used finally, it is necessary, of course, to reduce the exciting current to ampere turns, in order to eliminate the two unlike windings.

The numbers obtained from this saturation test will often be found to be of great assistance in designing other machines, or in correcting the proportions of a faultily constructed one. In chapter vii some of the applications of this data has been described, as for instance in correcting the proportions of an over-saturated frame. As described there, the exciting power of the coils (that is, the intensity of the field in the coil if there was no iron core) may be readily calculated approximately from the ampere turns and the cross-section of the core space. The constant thus obtained can be used as a guide in calculating the size of the cores or the ampere turns for other magnets in which the exciting power is to be of the same intensity. By calculating the total number of lines of force generated by the coils themselves (without iron cores) as described in chapter vii, and comparing this with the total number of useful lines of force in the armature field, found by calculation from a test (see chapter v and p. 423 ELECTRICIAN AND ELECTRICAL ENGINEER, November 1, 1886), constants may be obtained between the actual number of lines of force in the field, and the ampere-feet (that is, the number and

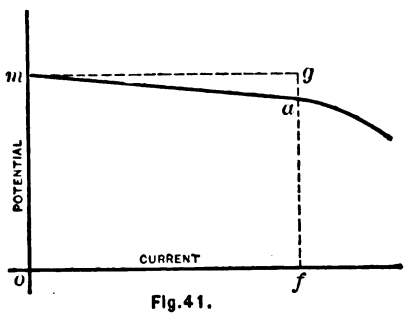

Fig. 41.
SEPERATELY EXCITED MACHINE.

length of the ampere turns) which generate the same. This constant serves as a valuable guide for determining the coil space, ampere-feet and ampere turns in designing other machines. There are, of course, other factors which enter into such calculations for new machines, for instance the quality of the iron, the magnetic resistance due to different lengths of cores, yoke pieces, etc., or to different air spaces between the field and the armature core; these will modify the calculations somewhat, and would complicate them very greatly if introduced, but as they are of secondary importance they may be neglected in approximate calculations, unless they are too widely different in the two machines. As in almost all other calculations which engineers have to make in designing any structure, a suitably chosen "factor of safety" will cover all such inaccuracies.

A careful study and analysis of the characteristic curves of a machine may often be the means of finding out faults in the proportioning of the parts, or of indicating the most favorable conditions of running, and it is therefore to be recommended. Such curves are to the electrical engineer as the curves of a steam indicator cards are to the mechanical engineer, and there is no doubt that the latter have been the means of making a much more careful study of the steam engine.

The characterists for the current and potential of the principal forms of machines, namely series, shunt and compound, have been shown in figures 37, 38 and 39, that for the less frequently used form, the separately excited machine, is shown in figure 41. The exciting current being constant the magnetism of the field magnets will be constant; the potential will therefore be a maximum on open circuit, that is for the point m, when there is no current. As the current from the machine increases (for decreasing external resistances) the potential will fall slightly, which is evidently due to the internal resistance of the armature which consumes an amount of potential proportional to the current. The first portion, $m\ a$, of this curve is therefore straight and slightly inclined to the horizontal. When the armature current becomes very great, and especially when there are many armature windings, the counter magnetism of the armature will become great as compared to the magnetism of the field; this will, by diminishing the useful magnetism, cause the potential to fall more rapidly, and the curve will then no longer approximate to a straight line, as shown beyond the point a. As this counter magnetism generally necessitates shifting the brushes, well built machines are usually run with currents less than that for the point a where this rapid fall of potential begins. The fall of potential in the armature due to its internal resistance, as for instance $a\ g$, divided by the total electromotive sorce $g\ f$ and multiplied by 100 will evidently give the percentage of energy lost in the armature. The continuation of curve $m\ a$, if it were possible to determine it, would ultimately meet the line $o\ f$, at a point which represents the greatest current which the machine gives on being short circuited, that is, when the potential at the poles is zero and the total electromotive force of the armature is absorbed in overcoming the internal resistance. This portion of the curve, although of interest theoretically, is of no use in practice.

Besides determining and examining the characteristics and the saturation curve of a machine, tests may also be made to determine other qualities, such as the counter magnetization of the armature, the shifting of the brushes, the exploration of the field, the magnetic leakage, the resistance of the armature, heating of armature and field, etc., some of the results of which tests may be of use also for determining co-efficients which may serve as guides in designing other machines.

The effect of the counter magnetization of the armature may be ascertained by exciting the field with a constant current from some outside source and finding, with the aid of a voltmeter attached to the brushes, the position which the brushes must have to give the greatest potential first on open circuit and then for the greatest armature current; the amount of the change of the position of the brushes indicates the effect of the counter magnetization of the armature.

The effect of shifting the brushes may be determined by separately exciting the magnets and moving the brushes to successive positions to the right or left of the neutral line, measuring the potential in each case. This may be done for open circuit, for various current strengths, or various degrees of saturation; the same test may also be made with self-exciting machines.

To explore the field surrounding the armature, the following simple method may be used. Wind a single coil of one or more turns of fine wire around one part of the armature, over or next to one of the regular coils; connect one end of this coil to the shaft and the other to a little insulated metallic block fastened on to a wooden ring secured around the commutator, so that it acts as a single commutator bar for this little coil. Connect the terminals of a sensitive voltmeter or galvanometer to two brushes, and apply these to the two ends of this coil, one on the shaft and one on the wooden ring containing the metallic block. When the machine is running normally this little coil will generate an electromotive force, and therefore a current, which is proportional to the strength of that portion of the field through which it is passing when the brush is in contact with the block. The reading of the voltmeter or galvanometer will therefore indicate the strength of the field. By moving that brush which is resting on the wooden ring

Digitized by Google

around to successive positions on the circumference of the ring, the relative strengths of different parts of the field may be determined, showing whether it is unbalanced, and if so where and how much, also where the neutral line is, how wide the neutral space is, how great the magnetic lag is, etc. This test may be made first, when there is no current in the armature, and second, when the normal current is flowing, and it will then also show the effect of the counter magnetization of the armature. The results may be plotted in the form or characteristic.

The magnetic leakage may be found by simply exploring the space surrounding the machine and armature by means of a compass needle, the direction of which will indicate the direction and position of the lost lines of force.[1] To determine this leakage quantitatively, make a small, thin loop of one or more turns of fine wire, connect its terminals to a sensitive galvanometer having a moderately heavy needle so as to act as a ballistic galvanometer. When the machine is excited normally from an external source, the armature being at rest, place this little coil or loop to its full length in the space between the armature and the pole-piece, and withdraw it very rapidly; it will cut the lines of force and develop an electromotive force which will be proportional to the current or deflection of the galvanometer. By similarly moving this same coil through the lines of force of the leakage, its plane being always perpendicular to these lines of force, the deflections of the galvanometer will indicate the intensities of the leakage at different places, as compared to the intensity of the useful field, and will therefore give the percentage of leakage. If the actual useful number of lines of force per square inch of the armature field has been calculated as described from the induction in the armature, the actual number of lines of force per square inch of the leakage is readily determined.

The armature resistance may be measured by any convenient method of measuring small resistances, one of the best of which is to measure the fall of potential by the potentiometer method,[2] when a known current is sent through the armature, or to compare its resistance with a known resistance in series with it, by the fall of potential in each.[3] When a reliable volt and ampere meter are at hand, a very simple way of measuring it is to measure the potential first on open circuit while running, and separately excited, and then on closed circuit with a current which is not great enough to distort the field; the difference of the two potentials divided by the current will then be the resistance of the armature. If the exact length and diameter of the armature wire is known the resistance may be calculated, remembering that it is one-fourth of that of the whole wire.

The heating coefficients may be ascertained by placing the bulb of a thermometer on the magnet coils after the machine has been running normally for at least three or four hours, and placing a little cotton around the bulb. Measure the radiating surface of the coils and the number of watts dissipated in them, from which the coefficient may then be calculated as described in chapter viii. To measure the same for the armature it will be sufficiently accurate for all practical purposes to hold the thermometer in the air currents from the armature, between the pole-pieces, or else to place it on the armature immediately after stopping, and surround the bulb as before with cotton.

The efficiency of a machine is obtained from the horse-power applied at the pulley, and the electrical power developed. There are several ways of stating this efficiency, the real or true commercial efficiency being the useful energy delivered in the external circuit divided by that applied to the pulley. This in the best machines varies from 80 per cent. to 91 or 92 per cent., and evidently takes into account all losses in the machine. The other efficiency, and the one often given by the makers, and called the total efficiency or efficiency of conversion, is the total electrical energy divided by that applied to the pulley, the total electrical energy being that in the external circuit, that lost in the armature and that lost in the field. It is evidently higher than the other, being sometimes as high as 97 per cent. The "economic coefficient" is the first efficiency divided by the second. In measuring the efficiency as well as in all cases in which it is necessary to measure the actual potential accurately, care should be taken in selecting the voltmeter, for if the voltmeter is in the form of a coil having considerable self-induction, the readings for the same potential will be quite different (as much as 25 per cent. it is claimed) according to whether the machine gives a steady current (as a unipolar machine or battery), or whether its current pulsates as in any machine with a commutator. The value of a reading therefore depends on the number of commutator bars and the speed. The most reliable method is to use a sensitive reflecting galvanometer with coils of few windings, calibrate it with a standard cell, and when using it with the high potentials of a dynamo add high resistances in the galvanometer circuit sufficient to get proper deflections. The constants of the instrument in volts per degree of deflection, will then be proportional to the resistances in the galvanometer circuit in the two cases.

1. See ELECTRICIAN AND ELECTRICAL ENGINEER, vol. vi., p. 292.
2. See Fleming's Short Lectures to Electrical Artisans, page 129.
3. See Flemings' Short Lectures to Electrical Artisans, page 143.

ABSTRACTS AND EXTRACTS.

THE WESTINGHOUSE SYSTEM OF ELECTRIC LIGHTING.[1]

BY G. L. ADDENBROOKE.

THE electrical and scientific world is certainly indebted to Mr. Pope for his clear and able exposition of the system pursued by the Westinghouse company,[2] and the principles which have guided them in working out the eminently simple method of using alternating current dynamos and transformers, which they have adopted in America with such striking success for electric lighting.

Mr. Pope has now done for the Westinghouse system what Messrs. Zipernowsky, Deri and Blathy have done for theirs. While they, however, had to devote a great deal of space to showing that their system was practical, and could only draw experience from a few installations, Mr. Pope has no need to demonstrate the feasibility of the thing that is already a thoroughly accomplished fact, and he has the experience to draw from which the knowledge gained in the manufacture and installation of nearly 100,000 lights has given.

In nothing more than in electricity, or, at all events, in electrical engineering, is the maxim true that mathematics are an excellent servant but a bad master. For some time past now we have had many learned disquisitions on the action of alternating currents under many different aspects; but while these treatises have had their value from a theoretical point of view, they have not been marked by that practical familiarity with the subjects with which they dealt, which daily experience on a commercial scale gives.

Literature of this sort suffers from what may, in default of a better term, be called "want of balance." In it complicated subsidiary effects, which in practice only come in as small percentage factors, are often treated with much minuteness and at great length.

The main points, then, being of a simple nature and easily explained, as most great truths are, occupy so small a share of the letter-press and mathematics that the student or general reader, unguided by experience, will often quite lose all sense of proportion in the subject he is pursuing. He is thus led to foresee difficulties and uncertainties where such do not really exist; while, on the other hand, the real difficulties which occur in practice are often so obscurely stated, if mentioned at all, that there is danger of being thrown off the track in endeavoring to reduce the problem to a commercial shape.

For these reasons this contribution of Mr. Pope's is welcome as

1. From the *Telegraphic Journal and Electrical Review* (London).
2. See ELECTRICIAN AND ELECTRICAL ENGINEER, September, 1887.

Digitized by Google

returning once more directly to the subject; and, further, because at the same time his article gives an exposition of the principles involved in this system of lighting, which is capable of being grasped by engineers generally and the more intelligent portion of the non-technical public.

Passing now from the system itself as described by Mr. Pope to the apparatus by which it is carried out as manufactured by the Westinghouse company, the first point deserving attention is the dynamo. In this the Siemens type, as usually employed with various modifications in Europe, is considerably departed from. Instead of the alternate poles of the field magnets being set opposite each other, as in the Siemens type, with a narrow space between for the armature coils to revolve in, the magnets are set side by side with their faces pointing inwards around the outside of the armature, which is of the drum type. As far as the field magnets are concerned, the chief objection which can be urged against this arrangement is a certain tendency to magnetic short circuit. That is each N pole having a S pole on either side of it, and the poles having some inclination towards each other, there will be a strong tendency for a large number of the lines of force to pass through the intervening air space direct instead of cutting the wire of the armature, magnetizing the iron beneath it, and then out again, so to speak, to the neighboring pole on either side. The diagrams given by Mr. Pope and his explanations, admirable as they are on most points, are somewhat incomplete on this, and in the absence of measurements and fuller particulars it is not possible to say what loss may take place on this account. As, however, the watts taken for the exciting current do not exceed two per cent. of the watts the machine gives at its full load, waste from this magnetic short circuiting may occur without seriously detracting from the efficiency of the machine.

Further, owing to the small size of the armature its periphery velocity is low, and consequently the speed has to be high to give the requisite E. M. F., 1,000 volts. The armature itself seems to be a very solid piece of work, and if it keeps fairly cool should wear well. I should imagine such a construction would hardly bear a higher number of volts permanently than that for which it is actually made. The reports of burnt armatures in the American electrical papers, which have once or twice rather inadvertently come to light, bear out this supposition, though no doubt manufacturing improvements will soon reduce this risk. Next to altogether avoiding the chance of burning a coil in an armature, the best thing is to be able to quickly replace one which has been burnt. It would be interesting to know how this is done and how long it takes in the Stanley machine. Apparently it could only be done in a machine shop with proper appliances. Otherwise there is no doubt that the machine is very open and favorably constructed for inspecting the working parts while in motion, a very important point, often less thought of by dynamo makers than it should be. To be able to get a clear view in a moment of all working parts, is the best preventative of accidents which can be devised.

In the drawing of the machine 16 field magnets are shown, and it is stated that with the 650 and 1,300-light machines the number of revolutions is 1,650 per minute. This gives the large number of 20,400 alternative, 40,800 reversals, per minute, or 680 per second, which strikes one as being a very high, an unnecessarily high number.

As regards the transformer, it is obviously a much more workmanlike and practical piece of apparatus than the Gaulard & Gibbs pattern, under the patents for which it is constructed. No doubt it works perfectly well; indeed, transformers are so simple an arrangement of iron and wire that, now the principles which regulate their construction are well known and clearly defined, it seems as if it would be difficult to make anything which would not work. It is with transformers as with dynamos.

The principles which govern their action once understood, dynamos can be constructed with different arrangements of armature and field magnets, which, supposing the workmanship in each case equal, will all give in practice almost precisely equal results.

The points which need attention in a commercially successful transformer, besides the satisfaction of the electrical conditions, are:

1. Protection of the coils from damp or wet. If damp or wet gets to the primary coils, short circuiting and consequent cutting of the transformer out of the circuit is sure to be the result. If the current is always passing through the transformer, protection is not of such material importance, as the expenditure of energy in the transformer is always sufficient to keep it pleasantly warm and consequently dry.

2. Proper insulation of the primary and secondary coils from each other and the arrangement of the primary so that points of too high potential are not brought electrically near each other. As the teaching of the Law and the Prophets was summed up in a short sentence, so the maxims regarding transformers may be summed up in the apostrophe:—Beware of damp and short circuits, keep points of greatly differing potential separate, and avoid contact between primary and secondary.

Anything approaching short circuit of a coil is instantly fatal, because the short circuited portion acts as a closed secondary to the other coils, which leads to almost instant fusion somewhere. Respecting contact between the primary and secondary, this is the point to guard against in working a transformer system on a large scale. As I pointed out a few weeks ago, the actual insulation of an extended series of mains cannot be very high in damp weather) although the specific insulation may be so. There will consequently always be a strong tendency in the mains for the current to go to earth. Now, the style of work usual in installations, however ample it may be to stand the voltage it is intended for, is hardly ever calculated to endure the tension of the mains in a transformer system, therefore if there is any weakness between the primary and secondary coils in the transformer, the main current is not unlikely to go to earth through the secondary somewhere or other in an installation. Of course this happening would soon cause the cut-outs to fuse, but still some one in the meantime may get a pretty severe shock, or something else may happen of an unpleasant nature.

I do not wish to say anything of an alarmist character—there is no need for it; but as every accident which now happens is so much against the system generally, it is important that inventors should not neglect to take proper precautions under this heading, seeing that they are sufficiently simple, so as to obviate any chance of an accident of this kind.

3. The third point is good ventilation. No special arrangements seems to be made for this in the Westinghouse type of transformer. As apparantly, so far, only comparatively small transformers seem to have been made of this pattern, the question no doubt has not particularly needed to be dealt with, but with larger sizes they will probably have to make some arrangements by which cooling can take place more rapidly than it could do through the sides of a completely closed iron box. It is obviously most important that the temperature should never reach the point when carbonization of the insulating material commences, as then all insulation is soon at an end.

The little connecting and cut-out boxes fitted in the transformer case are particularly neat and compact. Apparently from the construction there is no separate switch used for disconnecting the mains when the transformer is not in use. It would be interesting to learn how the cut-outs act in these boxes, whether the glass front is blown out when they go, or what occurs. There are some curious points about the action of cut-outs when currents of high tension are used which need elucidating, and which, if properly investigated, would not improbably lead to conclusions of considerable theoretical, if not practical, importance. Placing transformers on poles is a happy idea; and evidently, from the photographic illustrations given with Mr. Pope's article, when thus placed, they are not so unsightly as one would at first imagine. Although such a method is hardly applicable to a large town, yet for small ones and villages it appears eminently practical. How many small communities in our own hilly districts could easily and cheaply obtain all the advantages of electric illumination in such a manner, the power being supplied from some neighboring mill stream.

It is not a very complimentary reflection for European electricians and capitalists that although all the ideas and experimental work needed for the development of the transformer system of electric light have come from Europe, and although Messrs. Zipernowski, Deri and Blathy demonstrated commercially the perfect practicability of working transformers in parallel two years ago, it should be reserved for an American firm to take up the system and make it the commercial and practical success which the Westinghouse company is now doing.

WESTINGHOUSE BRAKE TESTS.

ANOTHER of the series of trials of the Westinghouse freight brake took place at Ridgefield Park, on the West Shore road, near Weehawken, on the 21st inst. The usual tests were made, with very satisfactory results. The novel performance of running a train of 20 freight cars fitted with the freight brake, but with increased leverage, against an ordinary passenger train, proved especially interesting. The passenger train was composed of ten West Shore passenger cars, which, as our readers are generally aware, are all of the most modern description, and built in the best possible style. Notwithstanding this fact, at a speed of 45 miles an hour, the improved brake stopped the train of 20 cars in 495 feet, while the passenger train with the ordinary brake ran 709 feet further. It is hardly necessary to point out the great importance of this difference, which would in many cases of emergency mean all the difference between perfect safety and a frightful disaster. As on previous test of this description, the trains ran on parallel tracks at the same speed, the engines keeping abreast of one another. At a given signal the brakes were applied simultaneously on both trains, with the result that the passenger train shot ahead with its whole length clear of the freight train. A more forcible proof of the great improvement that Mr. Westinghouse has effected in the operation of his brake could hardly be given.

Digitized by Google

The results obtained were as follows:

TRAINS OF 50 EMPTY FREIGHT CARS, 60,000 POUNDS CAPACITY.

	Speed. Miles per hour.	Distance. Ft.	Time. Secs.
1. Emergency stop.	23	203	12½
2. " "	41	674	20
4. " "	41	672½	20
6. Hand-brake stop.....	21	2.137	85

7. Break-away test. The portions of train when stopped were 43 feet apart.

The following tests were made with a train of 20 empty freight cars of 60,000 pounds capacity fitted with the freight brake, but with increased leverage for passenger service.

8. Emergency stop...	22	91	6
9. Omitted..... ..	....	....	....

The following test was made with the above train and a train of West Shore passenger cars run side by side, the brake being applied simultaneously to both trains when the engines were abreast and running at the same speed:

10 { Freight.....	45	495	13½
{ Passenger.....	45	1,204	27

Among those present at the test were: Messrs. J. D. Layng, general manager; C. W. Bradley, superintendent; Theodore Houston, late receiver, and W. G. Wattson, West Shore; Joseph Crawford, superintendent N. Y. Division, Pennsylvania; S. M. Felton, Jr., first vice-president; R. H. Soule, general manager, New York, Lake Erie and Western; H. J. Hayden, second vice-president; Walter Katte, engineer; Theodore Voorhees, assistant general superintendent; C. M. Bissell, division superintendent, and J. H. Franklin, New York Central.

The trials with the Westinghouse train will be repeated on the 26th inst. at Winnewood, situated on the Pennsylvania, near Philadelphia. The train will then proceed to Washington, where some further trials will be given, and thence to Pittsburgh, where the series of trials will be concluded.—*The Railroad Gazette.*

BRITISH ASSOCIATION NOTES.

THE following note from Professor Lodge in correction of his sketch of electrical papers at the British Association Meeting (see ELECTRICIAN AND ELECTRICAL ENGINEER for November, 1887) appears in the London *Electrical Review.*

"IN my sketch of electrical papers read at Section A (see *Review*, September 23d) there were one or two slips which you will allow me to correct.

"The mercury standards which Mr. Glazebrook had found to vary were not those of M. Mascart, but were made by Strecker and Himstedt (see his paper in the October number of the *Philosophical Magazine.*) Mr. Glazebrook tells me that Mascart's standards agree consistently with his own.

"All mention of Mr. Preece's paper on "The coefficient of self-induction in telegraph wires" was inadvertently omitted. This, and one or two other communications which I failed to hear read, will shortly appear, or have already appeared, in full in these columns.

"Sir William Thomson publishes his paper "On the vortex theory of the lumiferous ether" in the October number of the *Philosophical Magazine* under the title "On propagation of laminar motion through a turbulently moving inviscid liquid," and an abstract in *Nature* for October 6th, page 550.

"It there appears that the subject has occupied his thoughts at intervals for the last 20 years, and that I must have been wrong in judging from his manner at Manchester that it had been to him a fairly easy problem only lately attacked. This is a personal matter of no concern to anybody except, perhaps, a future biographer; all that I wish to call attention to is the official publication of the discovery, so far as it is as yet made by the author. The one definite point in the proof, still incomplete, is that a dissipation of wave-energy by rearrangement of the vortices has not yet been shown to be impossible, or, if possible, so slow as to be negligible. In other words, an assemblage of vortex filaments has been proved capable of transmitting waves of distortion like an elastic solid, but it has not yet been proved to be thoroughly *transparent.* It is hardly likely that the ether itself is absolutely transparent, else would the midnight sky be one blaze from an infinitude of stars foreshortened together. Either the universe of worlds is limited, or the ether has a trace of opacity. The latter is the more probable hypothesis: and, accordingly, the amount of transparency possessed by an assemblage of vortices of any required degree of smallness has still to be worked out. Let us hope that by the time the British Association meets in Bath the illustrious author will have this step also ready to communicate."

OLIVER J. LODGE

University College, Liverpool,
9th October, 1887.

CORRESPONDENCE.

NEW YORK AND VICINITY.

The Investigation of the Telephone Companies.—The Telegraph Companies seeking better terms from the Stock Exchange on their Quotation Business.—Telegraph Lines Prostrated by an early Snow Storm.—Subway Workmen dissatisfied with the proposed Cessation of Work, December 1.—A House-Mover Chops down some Wires and Cables in his way at Orange, N. J.—The new Factory of the United States Electric Lighting Co., at Newark.—A remarkable Electro-Magnet.—Trouble at Kiernan's News Agency.—Mr. Chas. W. Price, formerly of the Baltimore and Ohio Telegraph Co., engages in Electric Railroading.

THE investigation of the various telephone companies doing business in this state, by a legislative committee, does not appear to awaken the interest of the public. The usual testimony has been elicited regarding the royalties exacted by the parent company, and the dividends paid to stockholders. According to the testimony of Mr. Hovey, there are about 175,000 telephone subscribers in the United States, and it is to be presumed that there are ten times as many more who would like to use telephones if they could afford the expense. Mr. Storke would not admit that the telephone had become a necessity, and it is difficult to believe that any person would consider it a luxury. Perhaps the committee will define its exact status in their final report.

One of the results of the recent change in the telegraphic situation is an attempt by the managers of the various telegraph companies to secure a reduction in the heavy rentals exacted from them by the Stock Exchange for office privileges on the floor. Unless some concession is made the companies threaten to withdraw from the exchange. At a recent meeting with the committee of arrangements, the following telegraph and cable representatives were present:—Charles A. Tinker, general superintendent Western Union Telegraph Co.; A. S. Brown, general superintendent of the Mutual Union; Albert B. Chandler, president and general manager of the Postal, and George G. Ward, general manager of the Commercial Cable Co. In addition to a large fixed rental the companies pay tolls on each message received or sent which amounts to a large sum. The matter was discussed very fully, but no decision was reached, beyond referring it to the governing committe of the exchange for consideration at their next meeting.

It appears to be rather early in the season for damage to telegraph lines by snow storms, but there was a fall of about five inches of snow on November 16th, up the Harlem railroad which stuck to the wires and broke them down to a very considerable extent in the vicinity of Millerton, Copake and Boston Corners.

There is much dissatisfaction among the workmen employed by contractor Crimmins on the subways, because the city authorities will not allow the work to proceed after December 1st, by reason of the probability of the weather preventing the proper restoration of the streets. It is said that the Phenix Construction Co. is willing to proceed with the work if the necessary permission can be obtained. There is a large number of men engaged in this work, but it will doubtless be suspended if cold weather sets in.

The foundation of a law suit was laid at Orange, N. J., a few days ago, when Peter Dexheimer, a contractor, was engaged in moving a house. The wires of the New York and New Jersey Telephone Co. were in the way, but the superintendent offered to remove them temporarily for $25. The contractor thought he could do the work cheaper himself which he proceeded to do, cutting down the wires, and a 50-conductor cable. Over a hundred telephone subscribers were thus cut off, and it is supposed the company will bring suit for damages.

The United States Electric Lighting Co. has erected a handsome building on the site of the factory on Orange street, Newark, which was burned last summer. They have not been able as yet to resume the manufacture of incandescent lamps on a large scale because of the scarcity of expert glass blowers capable of making the vacuum pumps. They require one hundred of these pumps to exhaust the number of lamps necessary to keep up with their orders. They are now purchasing a portion of their lamps from the Sawyer-Man company.

The following curious yarn which bears the ear-marks of the newspaper scientist is going the rounds of the press, dated from Bridgeport, Conn., Nov. 14.

One of our leading army engineers has brought before the engineer classes of late, an experiment of so startling a nature in its inception as to promise wonderful results. It is a monster magnet made of two Rodman guns, which are connected at the breech. Around the magnet thus formed is wound about 20 miles of submarine cable. The cable is some that has been used in the torpedo service. It is wound and fastened in a substantial manner, making a permanent magnet. When electricity is applied some strange results take place. For instance, a bar of railroad iron 30 feet long, if placed in the open cannon's mouth, cannot be drawn out by as many men as can grasp it.

Another instance of the strength of this big magnet was illustrated Saturday with a 350 pound cannon ball. The shot was placed in the mouth of the cannon on the negative side. On reversing the electrical current it fell from its position, but was attracted to the opposite cannon and clung to its side. The positive cur-

Digitized by Google

rent was then reversed alternately with the negative, and the heavy cannon ball played between the two cannon like a tack between the poles of a toy magnet. Before many days there will be a public exhibition of this remarkable attractive magnet.

An apparent disruption of the firm of John J. Kiernan & Co. made a sensation in Wall street, last week, by reason of a proclamation from his partner which was sent out over the financial news "tickers" leased by Kiernan & Co., cautioning all persons against negotiating any form of paper purporting to emanate from the said firm. Senator John Kiernan was the founder of that special branch of the telegraph business which has certainly been very lucrative; sufficiently so to encourage competition. He has been an exceedingly liberal man, but has not given that attention to the symmetry of his bank account which modern business methods require, and his partner claims to have been annoyed by the alleged attenuation of his balance. Senator Kiernan on the other hand asserts that he is tired of partners and believes he can do better alone, and proposes to start a new system, having his headquarters on the ground floor of the Mortimer Building, at No. 11 Wall street.

Mr. Charles W. Price, formerly superintendent of the Metropolitan District of the Baltimore and Ohio Telegraph Co., has made an engagement with the Daft company, and has gone on a western trip in their interest. He is very much impressed with the future of the motor business, having examined the matter thoroughly before taking it up.

NEW YORK, November 21, 1887.

PHILADELPHIA.

The Alleged Forfeiture to the State of Baltimore and Ohio Telegraph Property.—The Proposed City Electric Light Plants.—The Thomson-Houston Co. Suing Alleged Infringers in this State.—Telephone Lines to go Underground.—The New Eight-Wheel Electric Car Equipped by Mr. Reckenzaun for Mr. Wharton.—Annual Meeting of the Society of Mechanical Engineers.

COUNCIL'S sub-committee on law, to which was referred the question of suing upon the forfeited $50,000 bond of the Baltimore and Ohio Telegraph Company, has prepared a report. It recommends that the city solicitor enter suit as soon as possible, and leave the legal questions and points raised by the corporation to be settled in the courts. The report has been submitted to the full committee.

It is claimed that, on account of the violation of a state law perpetrated in the absorption by the Western Union Telegraph Company of the Baltimore and Ohio Telegraph Company, the lines of the latter and all the property used in operating them within the borders of the state, in addition to the franchises by virtue of which they are operated, can be confiscated by the state of Pennsylvania.

The Baltimore and Ohio Railroad, from which the telegraph company derives its name and being, has along its tracks the wires of the company, and they do a large business. The railroad strikes north from Maryland and enters Pennsylvania at a point near Hyndeman, going to Pittsburgh, and leaving the state at West Alexander, W. Va.. The distance traversed is 191 miles.

The act to which reference is made was passed at the legislative session in 1883, and approved by Governor Pattison on June 5th of that year. The first section is as follows:

"SECTION 1. *Be it enacted, etc.*, that when any telegraph corporation, telegraph association, or telegraph company, chartered for telegraph purposes and owning and controlling a telegraph line in this state, shall consolidate with any other telegraph corporation, telegraph association, or telegraph company, chartered for telegraph purposes and owning and controlling a competing telegraph line, the said competing telegraph lines and all franchises and property connected therewith for the operation of the same within the state shall be forfeited to and become the property of this Commonwealth."

Some readers of this section claim that it tends to confiscate not only the belongings of the Baltimore and Ohio Telegraph Company within the Commonwealth, but also those of the Western Union, inasmuch as the act uses the plural in declaring that "the said competing telegraph lines" shall be forfeited. It is held by others that this was not the intention of the framers of the law, although the only expression from them that can be taken in a court is what they said in their statute.

The first section provides against a "consolidation," perhaps meaning a deliberate pooling of plants and effects by two corporations. The second section prevents the holding of a controlling interest in a telegraph company by a competitor, or the acquiring by purchase of a controlling interest, in which case provision is made for taking the possessions of the controlled company only. The section reads:

"SECTION 2. Whenever any such corporation, association or company, owning and controlling a line of telegraph, shall hold a controlling interest in the stock or bonds of any such other telegraph corporation, association or company owning a competing line of telegraph, or shall acquire, by purchase or otherwise, any other competing line of telegraph, the stock or bonds so held and the telegraph line, together with all franchises so purchased or otherwise acquired, shall be forfeited to and become the property of the Commonwealth."

The act further provides that the issue of confiscation may be raised by *quo warranto* proceedings in any court of common pleas in the state. Stock or bondholders who were opposed to a consolidation subsequently effected by two lines are considered innocent holders of their securities, and are protected by the court. After a final decree establishing the forfeiture, the property seized is to be exposed to public auction at the state capitol, and sold to the highest and best bidder for cash. The competing company cannot buy at that sale.

The act merely enforces the provisions of the Constitution prohibiting the consolidation of rival telegraph corporations.

Chief Walker, of the electrical bureau, will ask the finance committee of city councils at its next meeting for an appropriation of from $350,000 to $400,000 to construct two electric light plants to furnish the streets, public buildings, wharves and bridges with electric lights. The chief has prepared plans for this work, which have been approved by mayor Fitler and directors Stakley and Wagner. He intends that the stations shall be constructed on the banks of the Delaware and Schuylkill rivers. The building now used by the Kensington pumping station, at Otis street wharf, will be vacated by the first of the year, and the chief purposes that this structure shall be transferred to the electrical department to be used as the Delaware river electric light station.

The plans for this station provide for 12 dynamos, or sufficient to supply 600 arc lights. In case of necessity 16 dynamos can be put in, with a capacity of 800 lights. The station will have two condensing engines, of from 300 to 500 horse-power. These will consume 650,000 gallons of water a day. The location of the plant on the Schuylkill river has not been decided upon. The plans, however, are prepared, and provide for a larger building than that at Otis street wharf. Three 500 h. p. engines will be put in, with 24 dynamos of 1,200 arc light capacity.

"The city now pays for 537 lights at an average of 55 cents each per night," said chief Walker. "It will probably cost $130,000 for lighting the streets with electricity during 1888, and it will take a year to construct the proposed plant, after which the city will save 50 per cent. on its electric light bills, or enough to pay for the outlay in seven years. The location of the stations on the banks of the two rivers will be an immense saving in supplying water and coal for the engines and in removing the ashes."

The Thomson-Houston Electric Light Company of Connecticut, on the 11th of the present month began proceedings in the United States Circuit Court to have the Allentown Electric Light and Power Company, the Edison Electric Light Company of York, and Jacob Reed's Sons of this city, enjoined from the making of alleged infringements on improvements in current regulators for dynamo-electric machines, to which the complainant, under a patent, claims the exclusive right.

The Bell Telephone company have about completed arrangements for placing their wires underground, and a sub committee of the electrical committee of councils met recently for the purpose of considering an ordinance granting permission to the telephone company to construct man-holes and lay and maintain underground conduits, cables and wires for electrical purposes throughout the city. The streets named in the ordinance include nearly all the principal thoroughfares in the city. The ordinance, as approved, prohibits the erection of wires over or across any main street, or the stretching of the same from one pole to another. It also requires that the work of laying the conduits shall be done in the night time.

Mr. W. Wharton, Jr., says that the new eight-wheel storage battery car, recently completed by his company, ran a few days since 45 miles with one charging of the batteries, 12 miles of which distance was run in one hour without the least heating of the machinery, or any trouble whatever. This distance was accomplished around the track in their yard, consisting of sharp curves and grades for at least one-half of the distance. Two Reckenzaun motors of 8 h. p. each are used on this car, capable, however, of developing when required up to 15 h. p. each upon the driving axles of the cars. These motors weigh about 500 pounds each, and are exceedingly light for the power developed by them. One hundred and sixteen cells of the Electrical Accumulator Company's make, of the 23 — C pattern, weighing 40 pounds each, filled ready for use, are used on the car. Mr. Wharton said that the 4-wheel car had given great satisfaction, and proved reliable at all times, but that the new 8-wheel car with the Reckenzaun motors is a great advance upon it.

The eighth annual meeting of the American Society of Mechanical Engineers will be held in parlor C in the Continental Hotel, beginning on Monday evening, the 28th, and ending on Friday, December 2d. This society is composed of over 700 mechanical engineers in all parts of the Union, and this time was chosen so as to admit of persons visiting their eastern homes on Thanksgiving day and attending the meeting during the same trip. The committee of Philadelphians who are arranging for their reception comprises some of the best known engineers in this city, and is headed by Mr. Horace See, C. E. The programme includes visits to the representative mechanical institutions in the city, and a reception will be held at the Academy of the Fine Arts at the close of the session.

PHILADELPHIA, November 17, 1887.

Digitized by Google

BOSTON.

The Telephone Patent Suits.—Rise in American Bell Shares.—Infringing Telephones in the West.—Improved Methods of the New England Telephone Co; their Quarterly Report.—New Police-Signal System.—Auxiliary Fire Alarm Telegraph Companies.—The Woonsocket Electric Railway.—The Electric Car of the West End Railroad Co.—The Boston Electric Club.—A Treasury Decision that Electricity is not Dutiable.—Business Undertaken in Mechanial Telephones.

"WAITING for the verdict" is still the position of the American Bell Telephone Co., in respect to the Supreme Court of the United States; at the same time, there does not seem to be an oppressive anxiety in the Bell company's offices concerning the matter. The Bell stock has been very firm in price, and at every suggestion that the decision is to be rendered "to-day," it jumps up 10 or more points.

One reason of its firmness is found in the fact that the system of long-distance telephone lines, which are to be practically owned and controlled by the company, is rapidly nearing completion. The income from such lines, when established, as they will be in the near future, will add immensely to the company's revenue, which, of course, means larger dividends, and a consequent further enhancement of the value of the stock.

Meanwhile, the telephone business continually increases; and in the west the infringer flourishes like a green bay tree—exchanges are in operation and single telephones are freely circulated. The Bell people are, however, kept in complete knowledge of the operations of the agile infringers, as each local telephone company, wherever the infringer is operating, keeps the main company informed; and when the proper information has been obtained, the ever ubiquitous Mr. Tompkins makes a Sheridan like ride through the infested territory, and files papers of warning, injunction, and admonition upon the offending parties, striking terror and consternation to their guilty souls, and causes them to surrender and discontinue the use of the coveted telephones and apparatus.

The following circular has been issued to telephone subscribers by the New England Telephone Co.:—

Owing to the great inconvenience of the present system of numbers in our exchanges, as well as delays caused by operators being obliged to look over the list to find the line on which a subscriber is located before calling, it is thought best, in order to insure quicker service at all the offices, to make a complete change in all the numbers of suburban subscribers, to be published in the catalogue to be issued January 1st.

With the increased number of subscribers in all the exchanges the service is not what it should be. To make it so several very radical changes will be made, the most important of which is the above.

Also better apparatus in offices; fewer subscribers on a line where it is possible; a thorough inspection of instruments, and old bells replaced by new when necessary; and other minor things of less importance, all of which it is the intention of this company to do at once. The best apparatus will be used for the offices, and everything done on the part of the company to insure good service in all the suburban exchanges.

The New England company, have had recently, a complete overhauling of their suburban lines (near Boston), to see how many grounds are made in cisterns, etc., how many microphonic joints there are in the lines, and what occasions large resistances in short lines.

The directors of the New England Telephone and Telegraph Co. declared the usual quarterly dividend of 75 cents per share. The comparative statement for the quarter ended Sept. 30, is herewith given.

Quarter ended Sept. 30—	1887.	1886.	Increase.
Gross receipts	$255,856	$232,585	$23,271
Gross expenses	174,737	162,774	11,963
Net earnings	$181,119	$69,811	$11,308
Construction	1,149	778	371
Surplus	$79,970	$69,033	$10,937
January 1 to September 30—	1887.	1886.	Increase.
Gross receipts	$717,546	$681,372	$66,174
Gross expenses	518,786	488,469	30,317
Net earnings	$228,760	$192,903	$35,857
Construction	4,699	2,847	1,852
Surplus	$224,061	$190,056	$34,005

Compared with the previous quarter ended June 30, the showing is quite favorable, gross receipts increasing $4,074; net earnings $7,925; and the surplus is $6,776 larger.

A special telephone cable is being manufactured for the New England Telephone and Telegraph Co. of Boston, and is to be used to connect Long Island with Deer Island, so that there may be telephonic communication between the new city almshouse on the former island with the office of the Board of Directors of Public Institutions in Boston.

Edward Davis, of Cambridge, has invented a police-signal system, which has been exhibited at 109 Court street. The main advantages claimed for this system is its simplicity of construction and the large number of different signals of which it is capable. It has, for the use of the officer, a number of pulls, each of which is recorded at the central office with the number of the box from which it is sent. These signals are for fire, ambulance, patrol wagon, etc., and a telephone can be used if desired. If keys should be furnished to citizens, any person who uses one and sends a call from any box will be known at once by the number registered at the office, both the box number and the citizen's number being registered, also the exact time the call is sent.

Mr. Davis was the inventor of an individual bell, a few years since, for telephone lines, and is a very successful electrical mechanician.

The auxiliary fire alarm telegraph companies are coming to the fore, in this vicinity, at the present time. The company operating under the Rogers patent, have quite a hold in New England; their system operated to perfection at a recent small fire in the Parker House.

Then there is the Gamewell Fire Alarm Auxiliary Co., who are associated with the Gamewell Fire Alarm Co.; the latter company inform their patrons that they will not be responsible for any auxiliary system, other than the one they recommend, that may be attached to the Gamewell Fire Alarm System, The last candidate for public favor in this line, is a company organized under the inventions of Mr. W. J. Dudley, which seems to possess merits of advantage.

Representatives of the Thomson-Houston Electric Light Co., capitalists and members of the press from Boston and other points, visited Woonsocket, on the afternoon of Oct. 19th, there to witness the work of the electric street car in operation there the past few weeks. The system is the Bentley-Knight, and its power is supplied by an overhead wire from a regular Thomson-Houston dynamo. The car worked satisfactory, ascending and descending steep grades, running at as high a speed as 10 miles an hour at times, and being under perfect control. This is the first car run in New England by this system.

The West End railroad people seem to be highly pleased with the results obtained last month by their motor for street cars. Whether correct or not, there seems to be a prevailing impression, that if electric motors are to be used for street cars, the cars themselves should be larger—capable of carrying more passengers.

The Boston Electric Club continues to flourish and expand itself. Professor Cross, of the Institute of Technology is to give before the Boston Electric Club, on the 17th inst., an illustrated talk on "Acoustic Principles of Telephony."

The United States Customs Department have tackled the invisible force, and Secretary Fairchild has informed the collector of customs at Eastport, Me., in reply to his inquiry on the subject, that electricity, being an invisible subtle agent for power, possessing no substance as a merchantable commodity, would not be liable to duty when brought into Calais by wire for purposes of illumination.

A new mechanical telephone company called the "American Acoustic Co." has appeared and advertised itself quite extensively. Its managers have obtained control of all the early fundamental patents relating to mechanical telephones and apparatus, some 16 or more in number, and announces that it proposes to stop infringements, and occupy the field. If there is anything in mechanical telephones—and it would seem there should be for properly constructed and erected apparatus for short distances—this undertaking, if rightly managed, ought to lead to success.

At a meeting of the Board of Aldermen on the 14th inst., a petition from the Franklin Electric Light Co., of Maine, for leave to lay underground subways and conduits for the storage of electric light, telephone and telegraph wires, was referred to the committee on electric wires. The petitioners state that their system of underground construction will obviate practically the tearing up of the streets frequently, as is now the case, as the construction will be of a brick arch of sufficient size to permit a person to walk through the subway. These subways will only be constructed in such streets as will not interfere with business.

BOSTON, November 16th, 1887.

CHICAGO.

Concessions by the American Bell to Licensee Companies.—Improved Condition of some Western Telephone Companies; Accumulating Surplus for Underground Construction.—The Chicago Gas Trust Contention.—The City Electric Light Scheme.—An Ordinance Requiring Telegraph and Telephone Wires to be Run in the Alleys of the City.—The Municipal Telephone Tax not yet Approved by the Mayor.—The Telephone Company's Franchise Attacked.—The Fat Cattle Show Lighted by Ninety Western Electric Company's Arc Lamps; New Contracts of that Company.—The New Single Cord Multiple Switch-Board.—Mr. W. A. Ford to have a Multiple Switch-Board of his invention made by the Standard Electrical Works for the Denver Exchange.—The Westinghouse Incandescent Light Plant of the Denver Light, Heat and Power Co. to be the largest Incandescent Plant yet installed anywhere.—The Denver Illuminating Company to operate the Thomson-Houston Arc Light.—The Western Electric Company to be represented in Denver by Mr. J. G. Kaelber.—The American Bell Company Pursuing Western Infringers.—The Chicago Electric Club.—Notable Success of Electric Fire Alarms in Hotels and Public Buildings.

THE American Bell Telephone Company has made concessions in several instances to its licensees where the over capitalization of the sub-company, or the falling off of business has appeared to

Digitized by Google

demand some sort of relief. These concessions vary in form and amount, but the result is that telephone companies in the west are most of them getting on a dividend paying basis, albeit the dividends are small in most cases.

The Great Southern Telephone and Telegraph Company, after for three years devoting its earnings to the payment of debts, now has the balance on the right side, and has declared a dividend of two and a half per cent.

Some of the telephone companies, especially in the large cities, are laying by a surplus for the construction of underground circuits when the time comes that wires must go underground. In two western cities particularly, the underground question has been discussed lately with much seriousness. In Minneapolis the indefatigable Dorsett is at work, and several large fires in Kansas City have set the newspapers at work there.

The Gas Trust continues to be an object of attack for the City Council. On one side it is asserted that the franchises granted two of the companies composing the Trust, cannot be revoked without an appeal to the courts, and the preponderance of legal opinion seems to incline to that view. But on the side of the Council it is urged that the case can be brought before the courts best by the action of the Council in revoking the franchises and cutting the pipes, thus giving the Trust the opportunity of making the city the defendant in the case. A conference between representatives of the various companies composing the Trust and a committee of the City Council resulted in a report to the Council, by the committee, recommending the revoking of the franchise of the Equitable Gas Company.

Keeping pace with the agitation against the Gas Trust is the scheme for the city to erect an electric light plant of its own. The main difficulty in the way of accomplishing this on a large plan, is the fact that the city has reached the legal limit of its bonded indebtedness and is now living up to the maximum legal rate of taxation, so that there seems to be no way of securing the funds for the purchase and erection of a large plant.

The Gas Trust and the companies composing it are involved in much litigation, brought by dissatisfied stockholders, and with the large Edison central station and the city arc light plant for lighting the bridges and viaducts nearing completion, the gas monopoly is not having everything its own way.

An ordinance has been introduced in the City Council requiring that all telegraph and other wires be laid through alleys, where practicable, and that permits for the same be issued only on condition that the work be done at night.

The ordinance aiming to tax the telephone company $10 00 on each set of instruments, is still without the Mayor's approval, and in the meantime the City Council has discovered that the franchise granted to the Bell Telephone company was not assignable, not having been made to said company and its successors or assigns. It is therefore claimed that the Chicago Telephone Company, which is a successor of the Bell Telephone company, is carrying on its business without a franchise. As the Chicago Telephone Company has complied with all the conditions of the franchise, and has paid into the City Treasury the amount required under this franchise, receiving the receipts of the city for this account, it is claimed on the part of the company, that any defect in the title to the franchise is cured, or at least, that the city is effectually barred from questioning it.

The fat stock show, which has became one of the regular autumnal features of Chicago, has been lighted during its recent very successful meeting by 90 Western electric arc lights. This company has recently closed contracts for lighting the cities of Valparaiso, Ind., and Champaign, Ill., and is putting a 40-light plant into the large building to be occupied by Kuh, Nathan & Fisher, clothing manufacturers. Mr. Patterson reports that cable work is rushing. He is turning out large orders, principally of telephone cable for Boston, New York and Chicago.

The new single cord multiple switch-board is giving good service in the branch exchange, at Eighth and Freeman streets, Cincinnati. This board and the one at Columbus, Ohio, are watched with much interest by telephone men, as they are novel in many respects and relieve the operator of six out of thirteen motions in making a connection and disconnection.

Another new telephone switch-board is that invented by Mr. W. A. Ford, manager of the Colorado Telephone Company. Mr. Ford spent a day in Chicago early this month, on his way from Cincinnati, where he had been to place an order with the Standard Electrical Works, for one of his boards for Denver. This board is a multiple, but very different in form and operation from the regular multiple, and opinions differ as to whether it will be a success or not.

The Denver Light, Heat and Power Company is progressing satisfactorily with the work of installing the largest alternating incandescent electric light plant in the world. When this plant is completed, there will be in operation 9,000 Westinghouse lamps in addition to the Edison municipal plant of 800 twenty-candle power lamps, and the commercial plant of nearly 500 Brush arc lights, all operated from the same station.

Competition in the business of commercial lighting at least, is promised by the Denver Illuminating Company, which has secured a franchise, and proposes to operate the Thomson-Houston arc light system.

The Western Electric Company has established an agency at Denver, in charge of Mr. J. G. Kaelber, formerly of Rochester, N. Y.

Mr. Frank Knight, special agent of the American Bell Telephone Company, has been successfully engaged for some weeks in weeding out infringing telephones, which lately have been springing up rapidly throughout Kansas. The despatches stated that the suit brought by the American Bell Telephone Company against infringers in Little Rock, Ark., was based on the Edison patents. This was an error. The suit is on the same Bell patents which have been involved so often before, and always triumphantly. The date for the hearing of this suit is the 17th of this month.

The Chicago Electric Club has opened its restaurant, and it is extensively patronized, especially at noon. During the month two interesting meetings have been held. At the first Mr. Sunny, superintendent of the Chicago Telephone Company, read a paper on the effect of electric light induction on telephone wires; at the second Mr. Van Depoele was to have read a paper on electric railroads, but owing to pressure of business, he was unable to get his paper ready, and Mr. C. C. Haskins kindly took his place and read an interesting paper on "Coupling Dynamo Machines Together."

Three notable instances have occurred here during this month, showing the success of electrical appliances for guarding against loss of life and property by fire. The Mercurial Fire Alarm saved the Chicago Globe building, and one week later, the Union League Club building, from destruction by fire, and the guests in the Saratoga Hotel, which was burned recently, were aroused by the bells in their rooms, rung by the fire alarm apparatus in the office, and all escaped without injury.

CHICAGO, November 22, 1887.

LETTERS TO THE EDITOR.

Notice to Correspondents.

We do not hold ourselves responsible for the opinions of our correspondents.
Anonymous communications cannot be noticed.
The Editor respectfully requests that all communications may be drawn up as briefly and as much to the point as possible.
In order to facilitate reference, correspondents, when referring to any letter previously inserted will oblige by mentioning the serial number of such letter, and of the page on which it appears.
Sketches and drawings for illustrations should be on separate pieces of paper.
All communications should be addressed EDITOR OF THE ELECTRICIAN AND ELECTRICAL ENGINEER, 115 *Nassau Street, New York city.*

THE REIS TELEPHONE CONTROVERSY.

[82].—The letters published in THE ELECTRICIAN AND ELECTRICAL ENGINEER, by Stein, Houston and Kintner, have induced me to present a phase of the controversy as to Reis's invention which is not developed in them but which seems to me to be of importance if one would come to an abiding conclusion. 1st. There is the distinction between actual history and legally constructed history. As applied to the present case the matter stands thus, saying nothing of Bourseal and his description of apparatus for the transmission of speech. Reis did in 1861 and 1862, make something which he called a telephone. It consisted of (*a*) A transmitter which was in all respects the mechanical equivalent of the transmitter of to-day. The only important difference being that he used platinum terminals where we to-day use carbon. (*b*) A receiver for transforming the electrical waves into sound waves similar to the original ones. These were connected to a galvanic battery circuit several hundred feet long, and sounds of many sorts were made at the transmitter and head by one at the receiver, and among these various sounds so transmitted and heard were vocal sounds of many kinds and articulated words. So much is a part of printed history. It has been disputed however, that he even transmitted speech, and here it is where the hedging begins, and it is evident that those interested have each a definition of the term "transmission of speech," that suits his view of the case. One party argues that speech was not transmitted unless all of the consecutive vibrations in a sentence of several words were heard so as to be understood by one who had no experience in listening to telephonic sounds. The other party thinks that if single words were transmitted and heard with the apparatus, no matter how it operated, that the speaking telephone was invented, and needed but improvement to perfect it. As Reis nowhere says that he could transmit anything but single words of speech, it is by some taken to mean that the transmission of single words is not the transmission of speech, and therefore Reis did not invent a speaking telephone. So much for Reis. It is asserted, and so far as I know, has never been contradicted by any one, that Yates, of Dublin, did transmit speech in the sense of consecutive words in 1866, with Reis's apparatus. The credibility of this is precisely the same as that of the relation of any events that happened years ago, say of the stories of the late war now being published for the first

Digitized by Google

time. Therefore if Reis did not invent the speaking telephone, Yates did. This is simply actual history and needs not the slightest defense.

2d. For the protection of inventors it is supposed to be necessary to subject history to a legal construction, so that if events which really happened were not published in certain ways, they are to be treated as if they had never happened. It is not argued here that such a course is always unwarrantable, but a *historian of events* who should construe history on such a basis would be contemptible. It is absurd to say that a given event did not happen in Europe, because it was incompatible with the laws of the United States that it should happen. One who did not go beyond the records of the courts in order to determine who invented say the electric telegraph or who discovered America, would be a very vealy historian.

3d. When the appeal was made from the original description of Ries's apparatus and its working, to the apparatus itself and what it can do now, the first objection that faced every one who attempted to work it was this. It is impossible for Reis's telephone to transmit speech because it works by makes and breaks in the current—a condition that may enable one to transmit pitch but not quality, which latter necessitates an unbroken circuit. Attention was therefore directed to the actual operation of the transmitter, to determine whether it did as a matter of fact work in the supposed way. When a magneto receiver is used with the Reis transmitter for the sake of observing the mode of action in the latter, it is found that the latter does in reality transmit all the peculiarities of speech, the current is the so-called undulatory one, but the speech is not loud enough for much service, and often breaks. Still one can hear a great deal that is said. When one has satisfied himself that Reis's transmitter can and does produce the proper undulatory current, he is directly informed that he is not using the transmitter as Reis instructed him to use it, and that he is not using Reis receiver at all. It is implied by the first statement that the transmitter *must work* in such a way as to break the current for every vibration; but such objectors need constant reminding that Reis's transmitter and every body else's transmitter, works *automatically* from necessity. Neither Reis nor anybody else did or can make it work in the way it is asserted Reis "intended" it to work. Reis did *intend* that it should so respond to every vibration of the membrane that every characteristic of sound should be reproduced by the current, and he made a device that would do it. Let me repeat for the benefit of every one interested in this matter that the transmitter is *an automatic device and is not subject to the intention of anybody while it is in operation.* As to the second statement that the receiver is not a Reis receiver. It is true enough that a Reis knitting needle receiver is not a very good receiver, it transforms into sound waves only a small proportion of the electric energy spent in it, but it is equally true and beyond dispute that precisely the same order of transformations takes place with it as with the magneto telephone, and that the knitting needle receiver is capable of receiving well, I know, for I have heard talking plainly from it ten feet away. Of course I had an improved transmitter that could handle a strong current. But the second transmitter of Reis, namely the electro-magnet with armature, is precisely the same kind of a thing and works as a receiver in precisely the same way as does Bell's 1876 receiver. I never have heard that disputed. Therefore when one utilizes such principles in his receiver as those of an electro-magnet he does use a Reis receiver and nothing else. I would ask, if any one really believes that by mounting an electro-magnet in a box for convenience of handling and to prevent the scattering of the sound waves produced by it, he is using different electrical or mechanical principles in his so-mounted instrument? Yet precisely that is implied when one says that by listening to a magneto telephone connected to a Reis transmitter, one is not using Reis's principles.

4th. Mr. Kintner says in his letter that there is no conclusive proof that any one has been able to transmit intelligible speech between two distant points with Reis's apparatus as a whole, such as would be acceptable in a court of equity in this country. As I have had not a little experience of that kind, I have somewhat to say as to the proposition. I once made some tests of the sort for a court trial, and in the tests some 50 words were transmitted with Reis's cubical box transmitter and his knitting needle receiver. The words were not consecutive, but at the time I was not aware that that was essential. I started with the expectation of showing that "words could be transmitted." The other side expected me to show that "speech could be transmitted" meaning by speech—sentences such as the readings from a newspaper, etc. The number of words spoken at the transmitter were counted and the number of words said to have been heard, and the ratio was supposed to show that no words were heard and that those which were thought to have been heard were only guessed at and not heard at all. As I said before some 50 words were heard at that trial, yet the court did pronounce it an "utter failure." Again, I once had three gentlemen call to see if I could make the "Reis telephone as a whole" talk so that they could hear it and understand it. Of course I was very desirous of making them hear it especially as one of them was a reporter for an important paper. Two of them had but little difficulty in hearing words and some short sentences, but the reporter could not hear a word, nothing but inarticulate sounds. I worked an hour or more with him and only succeeded in making him hear three or four words at the end of the time. I remember that he said he distinctly heard the word *transmitter* when he was not expecting it or any other word. Now if that word was spoken and heard with Reis telephone by an inexperienced person and at an unexpected moment, was speech transmitted or was it not? If he had left at the end of half an hour's trial he might fairly have said that he could not hear a word with it, but he would have no right to say that others could not hear, for as I have said both the others were able to hear not a little. I conclude that whether one hears or not depends quite often upon the delicacy of his hearing and his ability to separate articulate sounds from other sounds.

I also conclude that historically, either Reis or Yates invented the speaking telephone, and that legally, whether Reis invented it or not depends upon the definition given to what we call "speech."

A. E. DOLBEAR.

College Hill, Mass., Nov. 18th, 1887.

ELECTRICAL NEWS AND NOTES.

THE AMERICAN INSTITUTE OF ELECTRICAL ENGINEERS AND THE NEW YORK ELECTRICAL SOCIETY.

JOINT MEETING OF NOV. 15, 1887.

THE meeting originally appointed for November 9th, having been adjourned on account of the sudden death of Mr. Sidney F. Shelbourne, the societies assembled November 15th.

The meeting was called to order at 8 P.M. by the president, Mr. T. Commerford Martin, in the rooms of the Society of Civil Engineers, 127 E. 23d street, New York.

The proceedings were as follows:—

The President—You are all, no doubt, aware of the sad circumstances which attended our last meeting, of which the present is the adjournment. Before we proceed, therefore, to the regular business of the meeting, I will ask the secretary, Mr. Pope, to present the resolutions which have been adopted by the Council of the Institute with regard to Mr. Shelbourne's death. It may be within the recollection of most of you that Mr. Shelbourne was from the earliest time associated with the Institute, and that during the last two or three years he had taken an active part in its work as a manager, giving his time and attention and legal ability freely to the service of the Institute. We miss him very greatly, and as a member of the council myself, I can only say that I have very often been greatly encouraged in the work that I would myself do for the Institute by seeing that which he was at all times willing to undertake in its behalf.

If the secretary is here, I will ask him to read the resolutions adopted by the council this evening.

The secretary then read the following resolutions:

Whereas, in the death, by accident, of Sidney F. Shelbourne, the American Institute of Electrical Engineers has sustained a severe loss,

Resolved, That we, the members of the Council of the Institute hereby record our deepest pain and grief at the sudden blow which has deprived the Institute of an active and unwearying manager, and ourselves of an associate ever prompt to render assistance in the regular work of the Institute, and to assume new duties and responsibilities in its behalf.

Resolved, That we specially recognize the value of Mr. Shelbourne's services in his revision, as a member of a committee, of the Institute's rules and regulations, a work performed with the utmost care, discrimination and success.

Resolved, That we express hereby our sense of the many estimable characteristics of our friend and associate, exhibited in his work as a manager of the Institute, his energy, his courtesy, and his persistence in what he deemed for the best interests of the body, and most likely to promote, through it, the welfare of the electrical profession.

Resolved, That these resolutions be spread on the minutes of the Council, and be printed in the Transactions of the Institute.

The President—At the joint meeting at the electrical exhibition, November 9th, a committee was appointed by Mr. Pendleton, the president of the New York Electrical Society and the chairman of the meeting, to draw up resolutions in connection with the untimely death of Mr. Shelbourne. The committee will now please report.

Mr. Hamblett read the following resolutions and moved their adoption:

Whereas, the members, in joint meeting, of the New York Electrical Society and the American Institute of Electrical Engineers, learning of the sudden death of their associate and comrade, Sidney F. Shelbourne, at the moment of their assembling, which, being communicated by the chairman, brought a resolution for immediate adjournment, in view of the calamity, and the appointment of a committee to draft resolutions appropriate as an expression of their grief at this loss, as well as a means of conveying a tribute to the memory of the deceased,

Digitized by Google

Resolved, That in recording the death of our valued associate, Sidney F. Shelbourne, we desire to pay a tribute to his personal worth and good qualities, as seen both in his friendly relationship with the society, and in his services as a member and officer of the Institute. We deeply regret and deplore the calamity of his untimely and accidental death, depriving us and the electrical profession of an earnest worker, always willing, upright, genial and considerate in his connection with us.

The resolutions were unanimously adopted.

The President—The resolutions will accordingly be entered in the Transactions of the Institute, and a copy will, as requested, be forwarded to the Electrical Society.

The subject before us this evening is one of the greatest interest, and will be presented to us by a gentleman whom we all recognize as foremost in his profession in this country. It deals in recent improvements in apparatus for ocean telegraphy, and I have great pleasure in requesting Mr. Cuttriss to proceed with the reading of his paper.

Mr. Cuttriss then read his paper on "Recent Improvements in Apparatus for Ocean Cabling." (See page 482.)

Mr. J. M. Pendleton here took the chair, and stated that Mr. Martin would read a paper contributed to the discussion by Mr. Thomas D. Lockwood.

Mr. Martin then read the following paper:

NOTE ON THE SIPHON RECORDER AND OCEAN TELEPHONY.

BY T. D. LOCKWOOD.

As some of you are aware, I was present at the time and place appointed for our meeting, to hear Mr Cuttriss explain and describe the improvements he has effected in the siphon recorder.

Although the unfortunate accident which we all deplore deprived us of the pleasure of hearing Mr. Cuttriss at that time, and myself perhaps for all time, still I congratulate myself that my visit to New York has at least given me a personal knowledge which I had never before possessed of that beautiful instrument, the siphon recorder. I have obtained a new illustration of the impossibility of obtaining an accurate knowledge of the construction and operation of a delicate piece of electrical apparatus from text-books. I had studied the siphon recorder in books, but found myself ignorant of it when the opportunity of examination at length presented itself.

It was especially gratifying to me to learn that we were to hear about an important branch of telegraphy, for I think that telegraphy has been of late neglected.

Though I yield to no man in my admiration for the immense recent amplification of the work of electricity, or in my appreciation of motors, lighting apparatus and heavy currents, I love variety, and have found it somewhat palling to read and hear as much about them as I have had to of late; for just as the human stomach quails at the idea of eating quail more than 40 meals in succession, so the human mind revolts at the notion of considering electrical currents due to an E. M. F. of 600 to 1,000 volts perpetually, and longs to demi-volt once in a while. Therefore I hailed with joy the announcement that we were to hear about the siphon recorder.

I learned that Mr. Cuttriss' recorder was operated by a permanent magnet instead of an electro-magnet. That is an advance which appeals strongly to me; and it means, as I look at it, a considerable diminution in the amount of attendance required. When I consider the number of telephones in use now, and reflect what a number of cells of battery would have been required had it not been discovered that permanent magnets could be utilized, and that the use of the battery was chiefly to make the magnetism, I cannot but appreciate that this is a material advance step.

Then let us look a little further; I understand from the text-books that on long cables it was found that if the siphon end were allowed to touch the paper, the freedom of its movements was interferred with, and that it was therefore found necessary to oppositely electrify the ink and the paper, the former being thus caused to issue and to mark the paper in a succession of fine dots.

If I understand the instrument of Mr. Cuttriss, it dispenses with this feature, which must have often marred the usefulness of the recorder, since on our eastern coast the atmosphere is usually rather "hygroscopic." I can well imagine occasions when all the ability of the operators and electricians must have been called into play to get the electrifying machine—the "mouse-mill," I believe, to work—in places and at times when the air was surcharged with moisture, and the "relative humidity," as the signal service calls it, was up in the nineties per cent.

It is interesting to note with Prescott, that while the telegraph of the United States, the Morse, which made its proud boast that it was a recorder, and by the way the first recorder has now almost totally been transformed into an acoustic or aural transient signal, the Cook and Wheatstone telegraphic idea, the visual semaphore, has evolved into the wonderfully delicate recorder before us.

I am also desirous of calling the attention of the Institute to the fact recorded in a letter of Mr. John Gott, dated St. Pierre, Miquelon, March 24th, 1887, to the Society of Telegraph Engineers, that the siphon recorder was capable of transmitting and reproducing speech telephonically, and that Mr. Gott had actually used it as a telephone. As I think this circumstance deserves a wider recognition, I will quote certain portions of the communication.

Mr. Gott says: "With the object of stimulating inquiry into the means of improving the telephone of Mr. Bell, which is the most beautiful adaptation of telegraphy ever made, I desire to draw attention to a few simple methods by which any one may satisfy himself of its practicability, for no one having witnessed its performance can fail to see a great future before it. The recorder of Sir William Thomson affords a ready means of speaking, and gives out such clear tones as to make the listener at first involuntarily look for the speaker behind the instrument (who may be miles away). It suffices to take a tube two inches in diameter, and stretch over one end a membrane of parchment or thin gutta-percha (the latter is less affected by the breath, the former becoming somewhat flaccid after a time). To the centre of the membrane cement a straw, and fix the tube in front of the instrument; about six inches from the movable coil, cement the other end of the straw to the coil at the point where the silk fibre is usually fixed; this is all that is necessary for both speaking and receiving. Six or eight cells on the electro-magnets suffice.

"A pair of these tubes may also be connected in a similar manner with the tongues of the two polarized relays. The tube is to be fixed in a convenient position at right angles to the tongue, taking care that the latter is free from its ordinary contact points. No battery is required for speaking with this arrangement. Or a pair of these speaking tubes may be connected with the ordinary armatures of any instrument or relay, and a current kept on the line.

"By these simple means may be demonstrated the possibility of speaking over many miles of telegraph line. The sound in the tube is not that of a whisper but of a voice at a distance; I have spoken through four knots of buried cable without sensible diminution of effect."

Since writing the foregoing it has been suggested to me that I might say a few words on the possibility, or possible practicability, of telephonic transmission over long submarine cables.

There is, I think, little to say on this head. You are all aware that in telegraphy it has been found possible to clear cables of charge by sending after each impulse of definite direction a clearing impulse of opposite direction, by which the static charge of the conductor was neutralized and the line cleared for the transmission of a second signal.

The first idea regarding the transmission of telephonic or voice currents over submarine cables is in favor of its practicability; for it may be argued, since the foregoing practice aids the transmission of telegraphic signals, and since telephonic currents, as usually transmitted, consist of a series of rapid alternations, why have we not here just the conditions of success.

The truth is, we have not. For in telephony the changes occurring are infinitely *too* rapid. They cannot serve the purpose of clearing the line; they rather serve the purpose of blocking the line, for the successive and consecutive impulses of opposing direction succeed one another so swiftly that they practically neutralize one another.

Take, for example, the magneto telephone. It is well known that the currents generated by this instrument when used as a transmitter are alternating, and follow one another with extreme rapidity; so that for a long time it was thought that they were so infinitesimal as to be immeasurable.

Suppose we have a fine galvanometer, and telephone through it. We see no deflection, but not because the current is so small, but because the plus currents succeed the minus currents of like potential and strength so fast that the needle cannot respond, and therefore does the next best thing and stays at zero.

Let us now consider the battery transmitter and induction coil. A moment's consideration will show us that we have a close analogue to the operation of the magneto telephone.

For though it is true that in the battery transmitter the action of the diaphragm merely varies the resistance of the circuit, and consequently the ratio, yet it is none the less true that the use of the induction coil develops currents in the secondary circuit and line which are alternating, because caused by the successive rise and fall of current in the primary circuit.

Consequently these currents are subject for long circuits of high capacity to the same drawbacks as those of the magneto telephone. We have then at present only one other alternative method, namely, the plan of including the battery and transmitter in the main line, and allowing the transmitter to vary a permanent current flowing in the main line, thus dispensing altogether with the coil. But this also is impracticable, because the very small proportion of variation in the total resistance of such a circuit cannot develop fluctuations of sufficient strength to satisfactorily influence a receiving instrument.

I am, therefore, convinced that electric telephony—that is, the transmission and reproduction of the human voice—will not, at least in the near future, be possible over long cables.

Digitized by Google

Electro-static induction and the retardation and prolongation resulting therefrom is the reason.

When I say *long* cables, I mean, for example, those over 100 miles long; and it would be difficult and not commercially successful over much shorter distances.

My conviction is that those who advertise the operation of telephones over Atlantic cables, either do not know what they are talking about, or, knowing, wilfully make misstatements for personal prospective gain. I am very sorry that I cannot be present to hear Mr. Cuttriss, and the discussion of the subject, but will certainly enjoy reading it afterwards.

The President—Gentlemen, you have heard the paper of Mr. Cuttriss, and Mr. Lockwood's somewhat informal comments thereon, and it is now open for discussion. I will take the opportunity of saying that should there be any gentlemen present who are not members of the Institute, we should be very glad to hear from them in case they wish to elicit any points or in case they may be able to give us information with regard to the subject now before us.

DISCUSSION.

Mr. Jos. Wetzler—I would be pleased to learn from Mr. Cuttriss what his experience has been in telephoning over cables.

Mr. Cuttriss—My experience in trying to telephone over cables commenced, I think, the same year, or at any rate the year after the telephone was brought out by Professor Bell. I was then at Duxbury. The late Mr. Gower, whom I presume most of you know of, came down there with the best telephones made up to that date, in order to try to speak over the Duxbury cable. He also brought down with him his electric harp, as he termed it, which was a series of reeds which could be struck by hammers the same as in a pianoforte. This would vibrate the contact points underneath the reeds, and send the same number of vibrations into the line to which the reed was tuned; and it was his desire to put that on the cable and have the superintendent, Mr. Gott, at St. Pierre, listen at the telephone for any sounds. He evidently, at that early time, appreciated the fact that it would be easier to get an intermittent current over a cable than it would be to get speech over it. We listened, and Mr. Gott reported nothing. He tried varying the power of the currents to the limits to which we allowed him to go, but still Mr. Gott reported that there was nothing. We then asked Mr. Gott at his end to send currents into the cable through condensers and also without condensers—intermittent currents. These were from a key. Nothing was heard; it was absolute death in the telephone. Mr. Gower would not believe, nor could we convince him, that the telephone was properly connected with the cable; so to prove it, I connected his telephone in circuit with the recorder, and got the party at the other end to send regular telegraphic signals into the cable. By this means they must come through the telephone, and on their way to earth also pass through the recorder. If the signals came we must see them. The consequence was that every signal came out written perfectly on the recorder, which we all read; but still it was death in the telephone—not a symptom of a sound. Still Mr. Gower was doubtful, and I did not know what to do. He did not like to doubt us, and yet we could see that he was doubtful. At last it struck me that I would put a rapid rheotome in the circuit with the telephone. Now, if there is any current coming over the cable at all, although it is infinitely weak when it arrives at the receiving station, this rapid make and break would vary it so much as to certainly make it audible in a telephone. The next time the signals were transmitted over the cable, the make and break being started, the room was filled with the sound of the pitch of the note that the make and break took, showing that the cable current was all the time passing through the telephone; but its wave was so slow and so even that although the diaphragm responded to everyone, it was totally beneath the capacity of any human ear to take the waves up and hear them as sound. Of course you will all readily understand that not sending more than probably one hundred signals in the circuit at the time, the vibrations coming in waves of that period would not be audible, because no ear can take up sound at that rate. That has been my experience. We have tried it over our cables here in New York for several parties, and we have also conducted experiments for Professor Moses G. Farmer, within the last year, over our Rockport cable, to see if we could get any sounds in that way, But in every case it is absolute death. The greatest distance through which I have heard signals on a telephone has been through about 75 miles of artificial cable.

The President—This cable subject is one that is not comparatively new to most of us in America, but somewhat unfamiliar. In America we have made so much progress in all the other departments of electrical application that we seem to have left that of cabling to our European—more particularly our British—brethren as a sort of consolation cup. (Laughter.) And they have certainly made remarkable progress in that field, and can in that respect and in that department set us an example. We have with us this evening one or two gentlemen who are quite prominently identified with some of these departments of work, and there is here one gentleman that, if I could induce him, I would like very much to address the meeting. He is not altogether a stranger in this city, and is certainly very well known to every one who has had anything to do with cabling. I refer to Captain Trott, of the cable repairing steamer "Minia," which happens to be in port at the present time. (Applause.) Captain Trott is a very reticent man, but if we could once get him started he would give us such a wealth of information that it would take a good deal of time to digest it.

Captain Trott—The president has intimated that Captain Trott is rather reticent. That is not altogether Captain Trott's fault. We belong to an old telegraph company, the oldest Atlantic company. We represent the first Atlantic cable company—that is, the Anglo-American. I am its representative here with you, and as such it is hardly open to me to say all that I know on submarine telegraphy. The branch of it before you here to-night is not a part of my subject. It belongs to the electrical part of it. My special duty is to lay and repair. I was connected first with the direct cable. I was in command of the ship on the laying of that cable, and also the French cable; but those gentlemen who were with us then are in opposition to us now. We are friends just the same, but I hardly think it right that we should give them all that we still have when they are fighting us. (Laughter.) As you will have inferred from the description of the recorder here to-night, submarine telegraphy is rather a dry subject, except our branch of it, which is very wet sometimes. It would take too long to go into all the details of our work. They are very difficult at times, and at other times we consider them tolerably easy. Of course, as you know, we have to do the fishing for these things at the bottom of the ocean, and we have played our part at that, and no matter what the gentlemen present may think of that branch of electricity, I am quite sure you will all admit they cannot do without it. If we stopped the Atlantic cables, why some considerable business would stop. Therefore you are to some extent depending on the telegraph cables. I thank you for the kind notice you have taken of me, and I beg you will excuse me from going into the matter of the operations, because it would take too long. I could not deal with it in such a manner, in the short time before us, as to make it anything like interesting. If any of you choose to come on board my ship, which is in the dry dock at the Erie Basin, we can show you some things there that perhaps you would be interested in. We have no secrets in that. We are prepared to show anything that we have there. There has been a great mystery made sometimes of submarine telegraphy, I think a little too much so, that only certain individuals should know anything about it. We look upon it as a thing that is pretty well known to-day, and therefore we have nothing, so far as we are concerned, either as a ship or a company, but what we are quite willing the world should look at there. (Applause.)

I, perhaps, might say one word on the question of telephoning on submarine cables. We did once put a telephone to the cable, I think, 83 miles from shore, and spoke through it and got conversation back. I think that is the utmost which was done. We have had singing through the cable at much greater distance, and they could tell on shore the songs that were sung on the ship, but there was nothing in the shape of conversation, I think, beyond that distance, to my knowledge.

Mr. S. S. Wheeler—How deep can you grapple a cable?

Captain Trott—2,600 fathoms is the deepest water that I have worked in.

Mr. R. W. Pope—We understood from Mr. Cuttriss that we were indebted to Mr. Ward for the progress made in introducing Morse on the cables. A great proportion of American electricians know something about Morse, and, of course, they are interested in knowing just what there has been done and what more there is a prospect of doing, and I presume that that point will be welcome if Mr. Ward could give us any further information upon it. I should, for one, be very glad to hear from him.

Mr. G. C. Ward—Mr. Cuttriss has told you as far as we have gone. We are working Morse on the Rockport cable. It was tried on the cable between St. Pierre and Cape Cod, but we found we could get no good results from it and it was abandoned. Since then nothing has been done on it, and the best results that have been obtained are, I believe, on this Rockport cable of ours between Canso and Rockport.

A Member—Would not Mr. Cuttriss kindly tell us something of the vibrator invented by Mr. Pescod, that has been in use for several years past?

Mr. Cuttriss—In reply to that I would say that I cannot say anything about that vibrator. I have never seen it, nor have I seen any drawing of the method. I have heard that he does it by vibrating the whole coil and siphon of a small Thomson recorder, in which the siphon is attached directly to the coil. He vibrates the whole thing so that he lifts the siphon a small distance off the surface of the paper. That, I believe, is what his invention is. Whether he has made any other improvement since I heard of it I do not know. I know that there is a counter claim between him and Mr. Dickenson, of Heart's Content. As to who is right in the matter I have no knowledge, and consequently I should not want to take ground one way or the other.

Digitized by Google

The method is the same as Mr. Dickenson's, practically, with the exception that Mr. Pescod vibrates the whole coil and siphon and Dickenson merely vibrates the siphon by pulling it with a silk fibre.

Mr. Ward—With regard to the Morse I should like to say that the relay is the invention of an American gentleman. You said that the Britishers were taking the steam out of the Americans in the matter of cables; but this Allen & Brown relay was invented by a Mr. Brown, formally associated with Mr. Edison in his automatic system. Mr. Allen is the financial part of the invention, sir. (Laughter.) So the Britishers will not take credit for that.

Mr. Wheeler—I think this question of telephoning through cables is so important that it ought not be passed over lightly, and I would like to ask Mr. Cuttriss to tell us something about what can be done to overcome the induction. I mean, has the effect of a complete metallic circuit been tried, and have there been any induction devices used?

Mr. Cuttriss—Until you can change the nature of a cable I don't think there is much hope of doing anything. Of course, metallic circuits have been tried. I do not know that you gain anything by them. In fact, if the two circuits are parallel for any distance I think that you would probably lose by them, for you are getting this whole reaction between the two parallel wires; that would act the same as a condenser, and there I must say that once, in talking over this matter with Mr. Edison, he told me that he did not believe it would be possible for us to speak from the corner of Wall street down to the Coney Island hut through our underground cable for that very reason. He said he thought all the current would be neutralized, so to speak, or short-circuited probably would be the better term, before it got down to Water street. In that he was wrong. I have spoken from Wall street down to Coney Island very recently, and in one case, where we had to open our cables to search for some trouble, at Flatbush (not half way to Coney Island), I spoke from the office to Flatbush direct quite easily; but found (after concluding my test through that part) that when we went over to the other end of the circuit which was looped through our Coney Island hut back to New York, so that we spoke through three times the circuit, part of which was laid double and parallel, it was as much as I could do to hear the voices. Whether that arose from any action between the two cores, or to what it was due, I have not been able to determine, nor have I had any opportunity for pursuing experiments in that line. I do not think that with long cables a metallic circuit is going to be of any help. Of course, a great deal depends upon where your circuit is. If you are in a straightaway country road, then I should say, as I before stated, that I think the straight line is the better; but if you are coming over the Brooklyn Bridge, then I should say you will do better to use a metallic circuit. Otherwise you get no speech at all on account of the induction from the other wires passing over the bridge.

Mr. Wheeler—Are we to understand from that, that a double wire would overcome the difficulty caused by the static capacity of the cable, but would bring up a greater difficulty, namely, self-induction between the two limbs of the circuit?

Mr. Cuttriss—I cannot say that I think the double circuit is going to overcome the static capacity at all. It cannot do it. The static capacity is still there. You would reduce your static capacity by using the two to about one-half. But at the same time you are doubling the resistance. Of course, with a telephone that would not amount to much, because it would go through the resistance very easily, but I think it would bring somewhat into play this effect of short circuiting across—the same as trying to talk through two parallel plates of a condenser. Of course this is all conjecture on my part, not having had a chance to try it. I think, if you were working over a good road, clear of outside induction, you would gain nothing by working in metallic circuit.

Mr. Pope—If I understand the gentleman correctly the capacity of the recorders as now operated is such that it does not appear to me that anything is to be gained by telephoning over a cable, excepting as a matter of experiment; that is, unless the telephone system was a great deal better than our local service I would much prefer a siphon recorder for accuracy in the transmission business. (Laughter.)

Mr. Cuttriss—On that point probably I could give a little light. The same day that Mr. Gower came down to Duxbury to try his electric harp, he stated what a wonderfully beautiful thing this was going to be to speak across the ocean. Well, having that trouble with the mirror between "M" and "N," "P" and "B," and other letters, we rather doubted it, but we thought we would put the thing to a trial. So he went up stairs with one telephone and we had the smartest of our clerks with a telephone down at the other end of the circuit. We took up with us what was then one of the most beautiful of cable messages, a "stoker." If a man could make anything out of the words of a "stoker" message he could understand almost anything. We told him to speak that message through his telephone, letter by letter, to the clerk down stairs, who should write it down, and then the clerk should repeat it back to Mr. Gower, who should also correct it from the copy. I think, if my memory serves me right, the message was something like a 40-word message. The clerk down stairs got over 80 errors. It was repeated back to Mr. Gower. There were two telephones in the circuit. Mr Gower was listening at one and another gentleman at the other, and Mr. Gower corrected, as he supposed, 40 of the errors: but there immediately arose a dispute between Mr. Gower and the other gentleman as to what certain letters were that were being sent. Now there were two people listening in the same circuit, and yet they could not agree as to what one letter was. So long as a telephone will not speak more clearly than that, through a room, you can imagine what it will be through cable service on a long cable.

Mr. Pope—That coincides with the early experience I had with the telephone. I was connected with the Western Union supply department, and I had occasion to inquire of that department about the shipment of three or four carboys of acid to Charleston, South Carolina. I got along with the whole business until the man at the other end attempted to tell me the name of the schooner by which it was shipped. It was a simple name—Mary Jane, or something of that kind. But of course there was no context to give me a clue as to what the words were. In other words, to telephone successfully you must have an inkling of the business that is to be transacted and who the person is who is sending it. I have had occasion once in a while to answer the inquiry, who is at the telephone, and before I could succeed in making the person understand that my name was Pope I would get disgusted and give it up. I presume that is one of the names that does not go through a telephone very well. That is one of the difficulties that I have always apprehended in connection with this proposition of telephoning commercial messages, and those who were most ardent in their advocacy of telephoning for commercial purposes were those who were not familiar with the facility with which a Morse operator can receive either proper nouns or cipher messages, or anything of that kind—and the same would apply to cable messages. Of course, most of us understand that the bulk of the business transmitted over the cables is in cipher, and I doubt whether it would be possible to carry on the cable business as it is to-day with the best working telephone line there is in existence. That is my opinion of it.

Mr. F. Bennett—I understand Mr. Cuttriss to say that the diaphragm of the telephone responded to the undulations of the current but not in rapid enough succession to be audible. Now, supposing this diaphragm had a needle on it such as there is on the phonograph, and that the cylinder, like that of the phonograph, was to be rotated at a given speed, and the undulations of the diaphragm repeated on the tinfoil of the phonograph, and after the message was sent let the cylinder be rotated at a more rapid pace. Would it not cause the undulations of speech to be reproduced so rapidly as to be audible to the human ear?

Mr. Cuttriss—In reply to this, I would say that it certainly would not be heard at the other end. There is no reason why the current controlled by the phonograph should be any stronger than one from any other source. The electrical harp that I speak of Mr. Gower's using was merely a rapidly interrupted circuit, according to any note that he struck. The harp contained about two octaves, and of course we had any range within those two octaves in which to try it, but no sound was got from it at all, and in that he used, I think, four cells of Leclanché and a powerful induction coil, the current from which was strong enough to give you a very disagreeable shock. So you can see if that would not go there would be no reason why anything from a phonograph would. It is exactly as Mr. Lockwood said in his paper: the currents are small, and go with such infinite rapidity that they are neutralized before they get to the other end. They are actually swamped, and that is the reason that you cannot get anything through. The receiving currents of course came through his instrument, because they came slowly, and were powerful enough to deflect his diaphragm. If we had a make and break on there it is possible we could have opened and broken the circuit from the diaphragm. Still, you can see why we could get no audible effect; for, the moment we began to increase our speed sufficiently to bring it up to that point we were sending the currents into the cable so rapidly that they were beginning to neutralize one another, and before we could get to the audible rate they were neutralized, probably, before they got twenty miles from the station.

Mr. Bennett—I think Mr. Cuttriss did not fully understand my meaning. We will take for illustration the old register that makes the dots and dashes on the paper. Of course we understand that that rotates at a given velocity, the same as it does in the phonograph. Now, supposing the cylinder on the phonograph were revolving the same as it does in the siphon recorder, it would cause the undulations, or the dots and dashes for instance, to make indentations on the tinfoil, and then by revolving the cylinder faster it would cause sharper vibrations in the diaphragm and therefore cause it to be more audible.

Mr. Cuttriss—Certainly, that would be so. But what advantage would you have from getting a sound in that way if it took you probably half an hour to get sufficient signals over the cable to move the diaphragm? That is, if it took you half an hour to get sufficient signals over the cable to be made audible through

Digitized by Google

the diaphragm, by rotating the cylinder afterwards rapidly, I do not see what gain you would derive, because your signals would have to come very slow to indent the tinfoil at all, and they would have to be reverse currents. You cannot send the same number of words over a cable per minute by reversals as you can by using what we term a mixed signal. The reversal has to be a change to one polarity from another; but in a mixed signal, as we term it, the same as in the letter "S" where it goes up with the wave, all you need is that wave and the length of the wave to show that three signals have gone. Therefore, the continuous sending of reversals through the cable does not increase the speed.

Mr. Pope—I would say before we close that these questions that have come up in regard to what can and what cannot be done over a cable can be looked at, I presume, from two different points, from the experimental point and from the commercial point. As matters of experiment they may be very interesting, but commercially we must remember that the cable is a very expensive affair; its service is expensive and it is necessary to utilize every moment of time. Consequently any system that is introduced must be an improvement in speed or an improvement by reason of doing away with these detentions and faults in apparatus which Mr. Cuttriss has brought to our attention in describing the older forms of instruments. As I understand it, the improvement has been in the continuity of the service rather than the speed; that is doing away with detentions caused by repeating back signals and also by failures of the apparatus.

PRIMARY BATTERIES.

The use of primary batteries for electric lighting purposes cannot be said to have met with success, and it is somewhat surprising that so many inventors are found applying their energies to this branch of electricity when there is better prospect of success in other directions. The number of primary batteries which have already been put before the public is legion, and a portion of these were dealt with recently, by Mr P. F. Nursey, before the Society of Engineers. On that occasion he described the batteries of Holmes & Burke, Ross, Coad, Lalande, Skrivanow, Upward, Pollak, Newton, D'Humy and Friedländer, and the "Regent," the "Union," and the "Eclipse" batteries. Mr. Nursey did not enter into any critical comparison of the merits or demerits of the batteries which he described, but impartially stated the claims of the various makers, leaving his audience to draw their own deductions, which proved, in the case of one speaker, to be that all were equally bad. The course adopted by Mr. Nursey, in view of the fact that the inventors or representatives of many of the systems described were present in the room, was an instance that discretion is the better part of valor, for when Mr. W. H. Preece, with his customary frankness, declared, during the discussion, that the batteries were nearly all equally unsuitable for ordinary domestic lighting, the dissent of many among the audience showed that this honest criticism, to which every practical electrician will readily agree, was but little relished by those interested in pushing particular batteries. But the hardest blow dealt against primary batteries was a speech by the representative of Lord Onslow. When this gentleman began his remarks the spirits of the battery owners rose with the expectation that something more favorable would be said about them, but they were doomed to disappointment. This speaker announced that Lord Onslow had adopted primary batteries for lighting his house, and that the makers had been very careful to point out how valuable the by-products were, and they also undertook to collect the same and keep the installation in order. At the present time the lights had gone out, and no one had come to collect the by-products. This account of the practice of primary batteries as contrasted with the grand theories contained in circulars and trade puffs, was not at all calculated to cheer those who had already been depressed by the utterances of Mr. Preece. Neither will the suggestion thrown out by Mr. Nursey, in his paper, bring relief. Mr. Nursey proposed that a committee should be organized, consisting of electricians, chemists, engineers, and commercial men, who would make it their business to test primary batteries to destruction, so that, as the author quaintly put it, the fittest may survive. We suspect that Mr. Nursey was quietly poking fun at the knights of the primary battery, or does he really think that there will be even one, among the whole number of batteries in the market, which will stand the ordeal of a practical test in the hands of an unbiased committee? The promoters of primary batteries have certainly up to the present not been without the means which should insure success to a really good invention. They have had command of sufficient funds to carry out experiments on the largest possible scale, and they have generally managed either to get a favorable opinion from some scientific man of high standing, or to construe an indifferent opinion into one of commendation, by a judicious selection from the reports of scientific men and journals. If, with these advantages, private enterprise is unable to develop a really practical battery, this aim will certainly not be attained by the committee suggested by Mr. Nursey. The reason why primary batteries fail, when applied to ordinary domestic lighting, is obvious. In the first place, they are less clean than a gas, hot air, or steam engine and dynamo; in the second place, they are more difficult to manage; and in the third place, the working expenses are incomparably higher. As long as we must burn zinc, iron, or any other metal in a battery to produce the current, competition against a dynamo driven by a heat engine is utterly hopeless. Where cost is not a consideration, such as for instance in miners' lamps and in the electric light installation of amateurs, batteries might with advantage be employed; but in the general domain of domestic electric lighting they have no chance whatever.—*Industries* (London).

THE COLOGNE ELECTRIC TRAMWAY.

The first trial trip which was recently made in Cologne with the new electric car of Messrs. Huber & Herebrand, of Ehrenfeld, was perfectly successful. The car is, in general principles, identical with those used in Hamburg, but certain details had to be altered in order to enable the machinery to develop greater power and overcome the difficulty of snow and ice on the road. Current is supplied by E. P. S. accumulators, which the firm manufacture under license from the English company. At the first trial trip everything went well, with the exception of the chain brake, which was found to be very unreliable. This circumstance did not, however, prevent the car from being operated in a most satisfactory manner, provision having been made for applying electricity as the brake power. The ordinary brushes on the motor are replaced by contact blocks pressed against the commutator by long springs, and to reverse the motion the position of these blocks need not be altered; it suffices to reverse the direction of the current through the armature. The controlling switch is so arranged that upon interrupting the current from the accumulators, the armature of the motor can be short circuited, by which means the motor begins to act as a generator, and to absorb power, thus bringing the car quickly to rest. If it is desired to stop in a still shorter time, the current from the accumulators is not interrupted on reversal, and the brake action of the motor becomes still more efficient. Even when used in this way, the sparking at the commutator was very trifling.—*Industries.*

PERSONAL MENTION.

Mr. Carl Hering.

It is a pleasure to record the appointment of Mr. Carl Hering, to the entire charge of the instruction in electrical engineering at the University of Pennsylvania. The instruction in this branch at present forms part of the course in mechanical engineering, but it will probably soon be made a separate and distinct department, in which the graduates will receive the degree of Electrical Engineer. The instruction at present embraces a general course in electrotechnics including the general principles, the principal applications, electrical computations, and practical work in the laboratory; the latter being limited chiefly to such work as would be required of a graduate in actual practice as an engineer.

The laboratory at present includes a small steam engine, several dynamos, storage batteries, and tangent and mirror galvanometers. Students are required to design, calculate and construct apparatus, to wire the laboratory, make specifications, and to calibrate instruments.

The rapid growth of this course at the university is due to the work of Professor Wm. D. Marks, of the department of mechanical engineering, who has, during the last few years, given special attention to instruction in electricity, and to the equipment of the laboratory.

Mr. Hering has achieved a well merited reputation among electricians. His services as assistant to Professor Houston in the arrangement and charge of the electrical exhibition at Philadelphia, in 1884, were signally successful. His various publications on electrical topics, well known to readers of this journal, evince talent and acquirements that ensure Mr. Hering's success in his new field of work.

OBITUARY.

Sidney F. Shelbourne.

Mr. Sidney Fortescue Shelbourne, whose sudden and apalling death by accident at the Electrical Exhibition on the evening of the 9th of November, has been fully noticed in the daily and weekly press, was widely known as a man of character and attainments. To those of our readers who may not have seen an account of the manner of his death, it may be well to state that while inspecting the Mather Electric Light plant at the Exhibition, Mr. Shelbourne fell against the fly-wheel of an engine driving the incandescent light dynamo—and was instantly killed.

Mr. Shelbourne was 51 years old. A graduate of Yale College, he was ordained as a clergyman in early life, and served some time as a chaplain in the army during the war of the rebellion. He

Digitized by Google

afterwards spent a period abroad, engaged in scientific studies. He also pursued a course of legal studies and became a member of the bar. During the few years just passed he had been chiefly engaged in projects for underground electric line construction. At the time of his death he was president of the New York Electric Lines Co., of which he was the originator and promoter. In the prosecution of this enterprise, though unsuccessful, Mr. Shelbourne exhibited remarkable persistence, pluck and courage.

As a member of the Council of the Institute of Electrical Engineers, Mr. Shelbourne was known to many of its members, and particularly to his colleagues of the council, as an earnest and faithful worker in all directions looking to the welfare of the Institute or the interests of electrical engineering. Reserved, but courteous in manner, and apparently seeking little personal intimacy, Mr. Shelbourne leaves upon those who knew him an impression of sturdy uprightness, fearless expression of honest conviction, and a strength of character that gave him courage and hope under many and great disappointments.

GAS AND ELECTRICITY IN EUROPE.

The chairman of the Imperial Continental Gas Association, being questioned at its half-yearly meeting as to the reasons the company had for undertaking the lighting by electricity of the Burg Theatre at Vienna, replied that there were special circumstances which rendered that course desirable. He did not state precisely what those circumstances were; but he furnished one reason, which he seems to have thought good enough to satisfy the dissentient English shareholders. This was that "if we can show our (electric lighting) competitors what the cost of an electric lighting station is, and what return it is likely to give, they will not be so ready to enter the field as they otherwise would be." A shrewd suspicion that this might be the ingenious motive of certain gas companies nearer home in seeking powers to supply the electric light, may have induced the board of trade some time ago to refuse their applications. We entertain no doubt that the gas companies will one day be glad to take up their competitor's business, not for the purpose of discrediting it but of working it for profit. Meanwhile, nobody will attach much value to their estimate of what an electric station ought to cost or what the profits are likely to be.—*The Electrician* (London).

ELECTRIC LIGHT AND POWER.

Anthony, Kan., has closed a contract with the Archer Electric Light Co., of Wichita, for a plant consisting of 300 incandescent and 10 arc lights to be put in immediately.

An American arc light plant is to be erected at Sydney, New South Wales, and 100 tons of appliances were shipped last week by steamer from New York.

The Heisler Electric Light Co. are now building all sizes of machines. Heretofore they only built the 150 dynamo; now the sizes are 150, 200, 300 and 400, 30 c. p. light.

The Westinghouse Electric Co. has been awarded the contract for lighting the senate chamber of the Capitol at Washington. This contract calls for 1,300 electric lights, which will include all candle-power from 9 to 16, 25, 50, 75, 100 and 150. The entire plant will be placed in the building, including the power, machinery and other essentials.

The Brush Electric Light Co., Louisville, Ky., will make extensive improvements to its plant.

E. M. Roberts will establish an electric light plant at Ashland, Ky.

The Knoxville Car Wheel Co., Knoxville, Tenn., will erect an electric light plant at its works.

The Norristown Electric Light and Power Co. will make improvements to its plant at Norristown, Pa.

The Fremont Electric Light and Power Co. will erect a plant at Fremont, Ohio.

W. G. Allen is interested in an electric light plant to be established at Dayton, Tenn.

The Westinghouse Electric Co. will install an electric light plant at Palmer, Mass.

The council of Kansas City, has granted a franchise to A. L. Ellis to construct electric light works.

The electric light plant and gas works of Arkansas City, Kas., are about completed. The dynamo for the electric light plant is set, the necessary building completed, and J. R. Strignell, an expert electrician, is superintending the work of getting the wires and machinery into good operating condition. There will be two sets of lights, one for all night and one for use until midnight. The mains and pipes of the gas works are laid and nearly everything at the gas works is ready for operation. It is the intention to turn on the electricity and gas at the same moment.

J. M. Shockley, representing the Western Electric Co., of Chicago, is in Concordia, Kas., overseeing the putting in of a new dynamo there in the electric light works, and making arrangements for running incandescent lights.

Lawrence, Kas., is now enjoying electric light, it having been turned on for the first time, last week. A score of electric lights are employed by the business men already, and the remaining 20 which the plant of the company enables it to furnish will soon be taken up.

The stockholders in the gas and electric light companies of Jefferson City, Mo., have organized into a new company, purchased both the gas and electric light plants, placed the capital at $100,000 and propose to expend $25,000 in the enlargement of the plants. The name of the new company is the Jefferson City Light, Heat and Power Co. The directors are as follows: Charles E. Hass, W. W. Wagner, H. C. Giesberg, J. C. Fisher, and Louis Schmidt.

An incandescent light system will be in operation in Lincoln, Neb., by Dec. 1st. The new machinery and fixtures are already being placed in position.

The Brush Electric Light Co., of Topeka, Kas., proposes to erect eight towers, furnish each with four 2,000 c. p. lights for the sum of $9,000 annually for five years.

Foreign.

England.—TRAIN LIGHTING.—There are three electrically lighted trains now running on the Great Northern Railway, and a fourth is almost completed, and will be at work before the end of the year. The South Eastern Railway Co. also has electrically lighted trains running as well as the Brighton company. The Great Northern trains so far fitted up are used on the suburban and underground service, where superior lighting is of the greatest importance. The carriages of these trains are not required to be separated, no matter what kind of light is used. The company, however, is prepared to electrically light trains from which carriages have to be detached, and to maintain the light in the separated carriages, which of course will carry their own storage batteries underneath. A large extension of train lighting by electricity is now being arranged for by this company.

Germany.—ELECTRIC LIGHT STATISTICS.—According to Dr. Schilling, the number of electric light installations in the 13 principal towns of Germany has increased during the last two years from 131 to 604; the number of arc lamps has increased from 591 to 3,280, and the number of incandescents from 10,403 to 50,469. The number of gas lamps in these 13 towns is 1,221,882, and therefore, lamp for lamp, electricity furnishes about four per cent. of the total illumination. In Munich this proportion is as high as eight per cent. According to another authority there are in Hamburg at the present time 78 installations of electric light; 325 arc lamps and 5,300 incandescents. About 1,000 h. p. is employed for these installations, of which one-fifth is furnished by gas engines.—*The Electrician* (London).

Switzerland.—The Winterthur correspondent of *Industries* states that the electric light is making great strides in Switzerland. Hotel-keepers and others interested in the prosperity of watering places have discovered that the electric light is almost a necessity if they would attract visitors, and as they are not wanting in enterprise, electrical engineers are kept well employed. The electric light was installed at the beginning of June in the large hotels in Engelberg, in various places in the Berner-Oberland on the lake of Lucerne, and also at Schaffhausen, where the fall of the Rhine is every night brilliantly illuminated with arc lights. In this case, the power is supplied from a turbine driven by the stream. In most places in Switzerland water-power is obtainable at a small initial expenditure, and this circumstance naturally facilitates the introduction of the electric light very considerably.

New Incorporations.

The Sturgis Gas and Electric Light Co., Sturgis, Mich. F. B. Ainger, and others, incorporators.

The American Illuminating and Power Co., Gouverneur, N. Y. Capital stock, $20,000. J. E. McMaster, and others, incorporators.

The Olean Electric Light & Power Co., Olean, N. Y. Capital stock, $25,000. W. M. Irish, and others, incorporators.

The Cauterskill Electric Light Co., Catskill, N. Y. Capital stock, $20,000. John H. Posson, and others, incorporators.

The Edwardsville Light and Power Co., Edwardsville, Ill. Capital stock, $10,000. Cyrus L. Cook, and others, incorporators.

The Gaynor Electric Light Co., Louisville, Ky. Capital stock, $20,000. T. T. Gaynor, and others, incorporators.

The Standard Electric Co., Louisville, Ky. Capital stock, $200,000. W. W. Hite, and others, incorporators.

The United States of America Arc and Incandescent Electric Light Co., Camden, N. J. Capital stock, $100,000. William Cohlman, Philadelphia, and others, incorporators.

The Sandusky Edison Electric Light and Power Co., Sandusky, O. Capital stock, $40,000. Henry Grafe, and others, incorporators.

The Oakland, Cal., Electric Light and Motor Co., has been incorporated. The directors or trustees are as follows: James Gamble, H. H. Watson, W. W. Blow, Thomas W. Cordor and Andrew Baird. The amount of capital stock authorized is $200,000. It is stated that the new corporation has taken steps toward securing the plant of the Pacific Coast Electrical Construction Co,

Digitized by Google

The Herrington Electric Light and Water Works Co., of Dickinson county, Kas., has been incorporated. The amount of the capital stock is given at $12,000. The list of directors is as follows: J. W. Creich, M. D. Herrington, E. T. Patton, T. J. Nair, C. N. Hull, F. Hartman, C. B. Kinney, S. G. Cooke and J. H. Bedson, all of Herrington.

The Salina Electric Light and Power Co., of Salina, Kas., has been incorporated. The amount of the authorized capital stock is $25,000. The following is the list of directors for the first year: William E. Geis, Joseph Suebert, George Kreuger, W. G. Gilbert, John Buchi, and J. F. Burrows, of Salina, and Henry Lehman, of Wichita.

TELEPHONE NOTES.

A telephone line is being established between Stockton and Tracey, San Joaquin county, Kas.

The St. Joseph (Mo.) Telephone Co. has added a new 50 number switch-board to its exchange, which gives the exchange a capacity of 650 subscribers. Enough applications are already on file at the superintendent's office to take every number of the new board and more. The company is now having a 1,200 drop multiple switch-board constructed by the Western Electric Co., in Chicago, which is expected to be position and in working order by the first of March next.

The Topeka Belt Railway Co., of Topeka, Kas., recently incorporated, proposes to run telegraph and telephone wires to nine suburban points from Topeka, and then to run one in a circle around Topeka, connecting these nine points directly.

South America.—THE TELEPHONE.—A new telephone company at Buenos Ayres has ordered from the Paris General Telephone Society the necessary material for a system comprising 2,000 subscribers, about to be established in that town. The same company have in hand a scheme for connecting the town with the outer harbor, by means of a telephone line. It is proposed to erect a small iron tower in the middle of the river to serve as a maritime station.

Austria.—A project of long standing concerning the management of telephone exchanges by the state has at last been carried out. The government offer to connect subscribers to central telephone exchanges in various towns and with the telegraph offices, in order to facilitate telephonic business, and also the transmission and receipt of telegrams by telephone. The charges are moderate, and in the majority of cases will not exceed 100 florins ($40 per annum). This change in the administration of telephones has been received very favorably by the present subscribers to the private telephone exchanges, who are all anxious to be connected with the state exchanges. As a consequence there has been a drop in the value of the shares of the private telephone companies.

ELECTRIC RAILWAYS IN AMERICA.

Now in Operation.

APPLETON, WIS.—Appleton Electric Street Railway; overhead conductor, 4½ miles, 5 motor cars. Van Depoele system.
ASBURY PARK, N. J.—Sea Shore Electric Railway; overhead conductors, 4 miles. Daft system.
BALTIMORE, MD.—Union Passenger Railway Co.; overhead conductor. Daft system.
BELLEVUE, PA.—½ mile.
BINGHAMTON, N. Y.—Washington Street and State Asylum Electric R. R.; overhead conductor, 5⅛ miles. Van Depoele system.
DENVER, COL.—Denver Tramway Co.; conduit, 4 miles. Short-Nesmith series system.
DETROIT, MICH.—Detroit Electric Railway Co.; overhead conductor, 2 miles, 4 motor cars. Van Depoele system. Highland Park Railway Co.; overhead conductors, 3 miles, 2 motor cars.
GRATIOT, MICH.—Gratiot Electric Railway Co.; overhead conductor, 1 motor car. Van Depoele system.
ITHACA, N. Y.—Ithaca Street Railway Co.; overhead conductor. Daft system.
KANSAS CITY, MO.—Kansas City Electric Railway Co. Henry system.
LIMA, O.—Lima Street Railway Motor and Power Co.; overhead conductor, 6½ miles, 7 motor cars. Van Depoele system.
LOS ANGELES, CAL.—Los Angeles Electric Railway Co.; overhead conductor, 5 miles, 4 motor cars. Daft system.
MANSFIELD, O.—Overhead conductors. Daft system.
MONTGOMERY, ALA.—Capital City Electric Street Railway Co.; overhead conductor, 11 miles, 20 motor cars. Van Depoele system.
PORT HURON, MICH.—Port Huron Electric Railway Co.; overhead conductors, 2¾ miles, 3 motor cars. Van Depoele system.
RICHMOND, VA.—Richmond Union Passenger Railway; overhead conductor. Sprague motors.
ST. CATHERINES, ONT.—Overhead Conductor, 6 miles. Van Depoele system.
SCRANTON, PA.—Scranton Suburban Railway Co.; overhead conductor, 2¾ miles, 3 motor cars. Van Depoele system.
WICHITA, KAN.—Wichita, Riverside and Suburban R. R. Co.; overhead conductor, 4 miles, 6 motor cars.
WINDSOR, CAN.—Windsor and Walkerville Electric Railway Co.; overhead conductor, 1¼ miles, 1 motor car. Van Depoele system.
WOONSOCKET, R. I.—Woonsocket St. Railway Co.; overhead conductors.

Constructing or Under Contract.

Ansonia, Conn.
Allegheny, Pa.
Dayton, O.
Easton, Pa.
Elsinore, Cal.
Harrisburg, Pa.
Jamaica, N. Y.
Lakeside, O.
Los Angeles, Cal.
Middletown, Conn.
New York, N. Y.
Pittsburg, Pa.
San Diego, Cal.
St. Joseph, Mo.
Worcester, Mass.
Wilmington, Del.

New Roads Projected.

Alameda, Cal.
Atlanta, Ga.
Bangor, Me.
Biddeford, Me.
Birmingham, Ala.
Boston, Mass.
Bridgeton, N. J.
Bayonne, N. J.
Brookline, Mass.
Brooklyn, N. Y.
Butte, Mont.
Birmingham, Ala.
Carbondale, Pa.
Chicopee, Mass.
Cincinnati, O.
Coney Island, N. Y.
Elizabeth, N. J.
Eureka, Cal.
East Cambridge, Mass.
Framingham, Mass.
Galveston, Tex.
Flushing, N. Y.
Fort Smith, Ark.
Jersey City, N. J.
Jacksonville, Fla.
Lincoln, Neb.
Milwaukee, Wis.
Muncie, Ind.
Newark, N. J.
Newton, Mass.
Newton, Kan.
Oakland, Cal.
Ontario, Cal.
Orange, N. J.
Oswego, N. Y.
Passadena, Cal.
Philadelphia, Pa.
Plainfield, N. J.
Pensacola, Fla.
Port Chester, N. Y.
Rochester, N. Y.
Rockaway, N. Y.
Scranton, Pa.
San Francisco, Cal.
San Jose, Cal.
San Antonio, Tex.
Springfield, Mass.
St. Augustine, Fla.
St. Paul, Minn.
Tacoma, Wash. Ter.
Tiffin, O.
Winston, N. C.
Westfield, Mass.
Wooster, O.

A trial trip has been made over the San Diego (Cal.) electric road, and it has proved a complete success. The road is 11 miles long and extends from the centre of the city to Pacific Beach.

THE WESTINGHOUSE, THOMSON-HOUSTON, SAWYER-MAN COMBINATION.

AN IMPORTANT ANNOUNCEMENT.

The union of interests effected by the Westinghouse and Thomson-Houston Electric Companies, noticed in THE ELECTRICIAN AND ELECTRICAL ENGINEER of October, has led to a further combination with the Consolidated and Sawyer-Man companies, which is announced in the following circular:—

NEW YORK, November 15th, 1887.

To the stockholders of the Consolidated Electric Light Co., and to the patrons of the Sawyer-Man Electric Co.:

GENTLEMEN:

The Consolidated Electric Light Co., owner of the Sawyer-Man patents, has, from time to time, received numerous applications for licenses to manufacture and sell the incandescent lamps, and other electrical apparatus covered by its patents, which applications it has been constrained to decline.

With the view, however, of utilizing the inventions of others who have achieved success in the electric lighting field, and at the same time of concentrating and enlarging its business to meet the constantly increasing demand for its apparatus, the Consolidated Electric Light Co. has recently completed the following important transactions, which are of interest to its stockholders and patrons.

First:—It has granted to the Thomson-Houston Electric Co. a license to manufacture and use incandescent electric lamps and attachments, in plants and stations established by that company in combination with its extensive and popular arc lighting system, upon an agreed royalty: and has also entered into a contract with that company, whereby the interests of both companies, in the manufacture and sale of electrical apparatus other than that covered by the Sawyer-Man patents, are mutually promoted.

Second:—It has purchased from the Westinghouse Electric Co. its valuable electric lamp factory and equipment at Pittsburgh, Pa., with a guaranteed capacity of 5,000 incandescent lamps per day; and has entered into an agreement with the Westinghouse company whereby the purchasers from that company of its alternating apparatus (the most economical and efficient for central station lighting), shall also purchase from the Consolidated Electric Light Co., the Sawyer-Man lamps and attachments, for use with such apparatus, and shall have the protection of the Sawyer-Man patents.

Third:—It has purchased the stock and assumed the control of the Sawyer-Man Electric Co., which has heretofore been its sole exclusive licensee, and will conduct its commercial department through the agency of the Sawyer-Man Electric Co.

Fourth:—It has purchased that valuable and extensive manufacturing and business property, Nos. 510 to 534 West 23d street, in the City of New York, having a front of 325 feet on said street with floor space of 117,000 square feet ready for use, and with a capacity for an increase to 200,000 square feet; being sufficient for the establishment, at that point, of its general offices, and of its principal legal, technical, manufacturing and commercial departments.

To meet the increasing business demands of the Westinghouse company, the Thomson-Houston company, the Sawyer-Man company and the general public, the Consolidated Electric Light Co. will, within a short time, manufacture at its combined factories, at least 10,000 electric lamps, with the necessary electrical attachments, per day; and this demand, based upon the reputation for excellence which these companies have attained, in their respective fields of usefulness, will greatly enhance the value of its property, and will promote the interests of incandescent electric lighting to an extent hitherto unknown.

Digitized by Google

This recognition of the Sawyer-Man patents, and consequent concentration of power in the Consolidated Electric Light Co., is attended with a corresponding ability, on the part of this company, to protect itself from infringement of its patents; and steps have recently been taken, in the institution of new suits against infringers, and in the vigorous prosecution of those heretofore instituted, which, it is believed, will speedily and effectually secure to the company the additional profits from that source to which it is justly entitled.

Very respectfully,
HUGH R. GARDEN,
Vice-President and Counsel.

MANUFACTURING AND TRADE NOTES.

THE WESTERN ELECTRIC CO., of Chicago and New York, have for some time been supplying a very effective fire alarm and guest call for hotels. At the recent fire in the Saratoga Hotel, which was supplied with their apparatus, the alarm was given from the office to the guests in their rooms "and many lives were saved thereby" the architect of the building says. Mr. J. L. Griswold, who has the same alarm system in his hotel at St. Louis, says: "Permit me to say that the system is working with admirable success, and is giving excellent satisfaction. I am much pleased with its introduction into my hotel."

THE SPRAGUE ELECTRIC RAILWAY AND MOTOR CO. is giving great attention to the transfer of power to considerable distance in the mining regions. In many instances abundant water power can be had at some miles distance which can not be directly transferred by aqueducts without enormous expense. The Sprague company is now prepared to install electric power plants in such places.

MR. JOHN J. HOGAN, Mechanical Engineer, 37 Centre street, New York, has prepared, copyrighted, and published a series of "Formulas for Steam and Water Heating Apparatus," which must prove extremely useful to all interested in the introduction of steam or water heating, and to owners of buildings, architects, and contractors.

These formulas supply an uniform method of specification which has been for a long time much needed. They are plain, simple and of practical utility. They facilitate the means of informing intending purchasers of warming apparatus as to the requirements of such systems, and save much time and trouble now incurred by the contractor in explanations. The formulas of Mr. Hogan are the first ever published for this class of work.

THE "C. & C." ELECTRIC MOTOR CO. have transferred their department of sales from the treasurer's office, No. 2 Wall street, to their factory, No. 90 South 5th avenue. This change has been made to facilitate the filling of orders, and that all correspondence may have prompt attention.

The company are now delivering automatic constant speed motors for incandescent circuits, and *safety* (shunt wound) motors for arc circuits, with the Wheeler regulator. This regulator is arranged to be operated by treadle or handle, and dispenses entirely with shunts or resistance boxes.

MESSRS. THOS. H. DALLETT & CO., Mechanical and Electrical Engineers of Philadelphia, have, we learn, devised and constructed a dynamo, which they intend to manufacture and put upon the market at an early day.

THE HARFORD ELECTRICAL CO., East Saginaw, Mich., are manufacturing and supplying a "Combined Clock and Automatic Guest Call" for use in hotels, apartment houses, etc. The company claim several points of superiority with simplicity of construction for their apparatus, and invite direct enquiries for information and estimates.

THE CALLENDER INSULATING AND WATER-PROOFING CO. are meeting with success in offering to electric light companies their Trinidad line-wire. The "Underwriters'" wire, to the defects and dangers of which general attention has now been drawn, has obviously had its day, and there is a demand on the part of prudent managers of electric lighting companies for a really insulated and safe line-wire. The Callender wire seems likely to take a prominent place among competitors. We are informed that the Thomson-Houston company have contracted with the Callender company for over 250 miles of Nos. 4 and 6 Trinidad line-wire for use in connection with their New York stations.

INVENTORS' RECORD.

Prepared expressly for THE ELECTRICIAN AND ELECTRICAL ENGINEER, *by* Pope, Edgecomb & Terry, *Solicitors of Patents for Electrical Inventions, 11 Wall Street, New York city.*

CLASSIFIED LIST OF UNITED STATES ELECTRICAL PATENTS.

From Oct. 18th to Nov. 15th., 1887 (inclusive).

Alarms and Signals:—*Electric Alarm and Recorder for Oil-Presses*, E. W. Thompson, 371,640. *Electric Alarm Clock*, S. P. Meads, 371,696. *Electric Call or Signal Apparatus*, G. W. Foster, 371,752. *Fire Alarm Telegraph*, C. Burgher, 371,876, October 18. *Electrical Repeating Bell*, H. B. Cox, 372,057, November 8. *Alarm*, W. G. Joerke, 373,073. *Electric Bell*, G. M. Sternberg, 373,102, November 15.

Clocks:—*Clock-Synchronizing Apparatus*, C. J. Hexamer, 373,138, Nov. 15.

Conductors, Insulators, Supports and Systems:—*Conductor for Electric Wires*, J. Grant, 371,681. *Joint for Lead-Covered Cables*, R. S. Waring, 371,808, October 13. *Hauling-Through Conduit System*, J. F. Munsie, 371,-965. *Underground Electric Conductor*, H. Metzger, 372,078. *Railroad-Rail and Conduit for Electric Wires*, J. T. Nulty, 372,373, October 25. *Apparatus for Covering Insulated Electrical Conductors*, E. McKnight, 372,550, November 1. *Insulating Joint*, F. H. Soden and H. Goebst, 372,910, November 8. *Sectional Draw-Rod for Placing Electric Wires in Underground Conduits*, W. R. Hart, 373,289. *Electric Cable*, A. E. Dolbear, 373,394, November 15.

Distribution:—*Electrical Distribution and Charge of Secondary Batteries*, F. King, 371,893, October 18. *System of Electrical Distribution*, E. W. Rice, Jr., 372,330. *System of Electric Distribution for Alternating Currents*, E. Thomson, 372,501, November 1. *Electrical Distribution*, J. W. Howell, 372,797, 372,798, and 372,799. *Method of and Apparatus for Connecting Alternate Current Generators*, O. B. Shallenberger, 372,934. *Apparatus for Connecting Alternate Current Electric Generators*, same, 372,935. *Pressure-Indicating Apparatus and Circuit for a System of Electric Distribution*, same, 372,936. *System of Electrical Regulation*, W. Stanley, Jr., 372,-942. *System of Electrical Distribution and Conversion*, same, 372,943. *Method of Electrical Distribution and Conversion*, same, 372,944. *System of Electrical Distribution*, H. M. Byllesby, 373,009; G. Westinghouse, Jr., 373,035 and 373,037. *Automatic Circuit-Controlling Apparatus for Systems of Electrical Distribution*, same, 373,036. *Converter-Box*, Westinghouse, Byllesby, Shallenberger & Schmid, 373,038. *Electric Converter*, O. B. Shallenberger, 373,029, November 8.

Dynamos and Motors:—*Brush-Shifter for Dynamo-Electric Machines and Motors*, E. H. Amet, 371,536, October 18. *Regulator for Dynamo-Electric Machines*, C. E. L. Brown, 372,201. *Regulator for Electric Motors*, A. W. Meston, 372,231, October 25. *Dynamo-Electric Machine*, C. Batchelor, 372,-447, November 1; F. J. Sprague, 372,822. *Electric Motor*, same, 372,823; D. Higham, 372,910. *Dynamo-Electric Machine*, W. Stanley, Jr., 372,945. *Dynamo-Electric Machinery*, H. E. Walter, 373,034, November 8. *Electric Motor*, E. Thomson, 373,108. *Dynamo-Electric Machine and Electromotor*, W. Main, 373,145. *Electromotor and Dynamo-Electric Machine*, same, 373,-146. *Automatic Regulator for Dynamo-Electric Machines*, C. D. Jenney, 373,369, November 15.

Galvanic Batteries:—*Galvanic Battery*, J. T. Armstrong, 372,193, October 25; H. B. Cox, 372,658. *Carbon Battery*, C. H. Wilder, 372,734. *Galvanic Battery*, J. W. Howell, 373,021, November 8; C. Gassner, Jr., 373,064. *Battery-Jar*, C. A. Brown, 373,334, November 15.

Lamps and Appurtenances:—*Socket and Key for Incandescent Lamps*, J. J. Fisher, 371,570, October 18. *Governor for Incandescent Lights on Arc Circuits*, C. D. Baker, 371,915, October 25. *Incandescent Electric Light Bulb*, R. Haines, 372,313. *Lamp-Post and Lamp*, F. A. Sawyer, 372,334, November 1. *Regulator for Electric Lamps*, S. Mathias, 372,986, Nov. 8.

Measurement:—*Electric Meter*, R. N. Dyer, 371,559, October 18; H. M. Byllesby, 373,010, November 8. *Electric Dynamometer*, J. Cauderay, 372,358, November 1.

Medical and Surgical:—*Device for Indicating Life in Buried Persons*, C. Redl, 371,626. *Electric Forceps*, J. Brannan and W. E. Stone, 371,664, October 18. *Electro-Therapeutic Apparatus*, F. J. Kneuper, 372,808, November 8. *Electric Belt*, J. Williams, 372,647, November 1; G. S. Bennett, 373,044. *Therapeutic Battery*, M. A. Morehouse, 373,088. *Electrode for Forming Clots in Varicose Veins*, J. R. Hamilton, 373,399, November 15.

Metallurgical:—*Magnetic Separator*, J. Wenstrom, 373,211, November 15.

Miscellaneous:—*Anti-Induction Device*, J. Curran, 371,555. *Means for Preventing Induction on Electrical Conductors*, S. C. Drew, 371,557. *Electrical Registering Device*, A. S. Hobby, 371,583. *Electrical Indicator*, M. Waddell, 371,720. *Vibrating Rheotome*, J. R. Hard, 371,755. *Electric Circuit Connection*, S. Heffner and J. H. Phillips, 371,840. *Coin-Operated Electrical Weighing Scale*, E. R. Whitney, 371,869, October 18. *Rheostat*, J. Hartman, Jr., 371,937. *Electrical Communicating System*, A. G. Holcombe, 371,940. *Electric Current Indicator*, W. H. Markland, 371,958. *Electrical Resistance Board*, I. W. Colburn, 372,012. *Electrical Safe-Lock*, C. J. Kintner, 372,026, and 372,028. *Electro-Magnetic Safe-Lock*, same, 372,027. *Electrical Combination Lock*, same, 372,029. *Electrical Primer*, G. Stuart, 372,046. *Coin-Operated Induction Coil*, W. Oliver, 372,168. *Electric Valve Controller*, S. W. and W. V. Dermitt, 372,208, October 25. *Electric Regulator for Hydraulic Elevator Systems*, L. Daft, 372,361. *Apparatus for Transmitting and Receiving Electrical Signals*, M. Deprez and B. Abdank-Abakanowicz, 372,404. *Machine for the Manufacture of Wire Spirals*, F. Mallet-Guy, 372,423. *Coin-Operated Induction Coil*, P. G. Williams and A. W. Roovers, 372,441. *Sewerage System for Buildings*, C. H. Shepherd, 372,494. *Coupling for Wires and Bands*, C. E. Tafflinger, 372,579. *Coupling for Electric or other Wires*, F. S. Pond, 372,637, November 1. *Process of Making Electric Gold Pictures*, A. W. and E. M. Tucker, 372,720. *Electrical Pumping Apparatus*, F. J. Sprague, 372,824. *Electrical Current Indicator*, J. F. Kelly, 372,851. *Resistance Regulator for Electric Currents*, G. Montanus, 372,860. *Electric Firing Mechanism, for Guns and Shells*, W. W. Bradley and J. R. Holroyd, 372,958, November 8. *Electric Temperature Regulator*, L. F. Easton, 373,061. *Electric Valve Controller*, G. M. Sternberg, 373,103 and 373,104. *Mail-Box Indicator*, J. F. Tirrell, 373,207, November 15.

Railways and Appliances:—*Electro-Magnetic Brake Apparatus*, G. T. Woods, 371,655. *Railway Signal*, E. M. Chase, 371,670, October 18. *Electric Railway*, J. Hartman, Jr., 371,936, October 25. *Circuit System for Electric Brakes*, G. F. Card, 372,598. *Coupling for Electric Brakes*, same, 372,599, November 1. *Railway Signal*, F. Pearce, 372,865, November 8. *Electrical Railway*, B. Bidwell, 373,046. *Electric Train Signal Apparatus*, J. C. Tiffany and J. R. DeMier, 373,160, November 15.

Storage Batteries:—*Secondary Battery*, C. Hering, 372,468, November 1.

Telegraphs:—*Automatic and Autographic Telegraphy*, C. Selden, 371,980. *Telegraph Key and Sounder*, G. M. Lane, 372,155. *Autographic Telegraphy*, J. E. Watson, 372,245, October 25. *Automatic Telegraphy*, W. A. Leggo, 372,455, November 1. *Telegraphic Transmitter*, G. Juengst, 372,805; W. W. Evans, 372,846, November 8. *Telegraph Key*, A. Oakes, 373,152. *Railway Telegraphy*, G. T. Woods, 373,383, November 15.

Telephones, Systems and Apparatus:—*Mechanical Telephone*, J. W. Colby, 371,551. *Telephone Holder*, A. L. Hott, 371,757, October 18. *Call-Register for Telephones*, A. F. Adams, 372,247, October 25. *Automatic Telephone Exchange*, T. D. Lockwood, 372,378. *Micro-Telephone*, C. Clamond, 372,455, November 1. *Signal for Telephone Instruments*, J. M. Baker, 373,043. *Acoustic Telephone Exchange*, W. H. Eastmann, 373,-060, November 15.

Digitized by Google

Digitized by Google

Digitized by Google

Digitized by Google

Digitized by Google

Electrical engineer. 112699 v.6

DATE	NAME	DATE

Digitized by Google

Digitized by Google